Downloaded from http://www.everyspec.com

INCH-POUND
MIL-PRF-32287A
15 February 2011
SUPERSEDING
MIL-PRF-0032287(SH)
03 June 2009

PERFORMANCE SPECIFICATION

PACKING, PREFORMED, PETROLEUM HYDRAULIC FLUID RESISTANT

This specification is approved for use by all Departments and Agencies of the Department of Defense.

1. SCOPE

1.1 Scope. This specification covers O-ring packings for shipboard use with petroleum-based hydraulic fluids conforming to MIL-PRF-87257 and MIL-PRF-83282 over the temperature range of -65 to 275 °F (-54 to 135 °C).

1.2 Classification.

1.2.1 Sizes. The O-rings conform to sizes shown in SAE-AS-28775.

2. APPLICABLE DOCUMENTS

2.1 General. The documents listed in this section are specified in sections 3, 4, or 5 of this specification. This section does not include documents cited in other sections of this specification or recommended for additional information or as examples. While every effort has been made to ensure the completeness of this list, document users are cautioned that they must meet all specified requirements of documents cited in sections 3, 4, or 5 of this specification, whether or not they are listed.

2.2 Government documents.

2.2.1 Specifications, standards and handbooks. The following specifications, standards, and handbooks form a part of this document to the extent specified herein. Unless otherwise specified, the issues of these documents are those cited in the solicitation or contract.

DEPARTMENT OF DEFENSE SPECIFICATIONS

MIL-PRF-6083	-	Hydraulic Fluid, Petroleum Base, for Preservation and Operation
MIL-PRF-83282	-	Hydraulic Fluid, Fire Resistant, Synthetic Hydrocarbon Base, Metric, NATO Code Number H-537
MIL-PRF-87257	-	Hydraulic Fluid, Fire Resistant; Low Temperature Synthetic Hydrocarbon Base, Aircraft and Missile

DEPARTMENT OF DEFENSE STANDARDS

MIL-STD-413	-	Visual Inspection Guide for Elastomeric O-Rings
MIL-STD-1916	-	DoD Preferred Methods for Acceptance of Product

(Copies of these documents are available online at https://assist.daps.dla.mil/quicksearch/ or from the Standardization Document Order Desk, 700 Robbins Avenue, Building 4D, Philadelphia, PA 19111-5094.)

Comments, suggestions, or questions on this document should be addressed to Commander, Naval Sea Systems Command, ATTN: SEA 05S, 1333 Isaac Hull Avenue, SE, Stop 5160, Washington Navy Yard DC 20376-5160 or emailed to CommandStandards@navy.mil, with the subject line "Document Comment". Since contact information can change, you may want to verify the currency of this address information using the ASSIST Online database at https://assist.daps.dla.mil.

Downloaded from http://www.everyspec.com

2.3 Non-Government publications. The following documents form a part of this document to the extent specified herein. Unless otherwise specified, the issues of these documents are those cited in the solicitation or contract.

ASME INTERNATIONAL

ASME B46.1	-	Surface Texture (Surface Roughness, Waviness, and Lay)

(Copies of this document are available from ASME International, 22 Law Drive, P.O. Box 2900, Fairfield, NJ 07007-2900 or online at www.asme.org.)

ASTM INTERNATIONAL

ASTM D1414	-	Standard Test Methods for Rubber O-Rings

(Copies of this document are available from ASTM International, 100 Barr Harbor Dr., P.O. Box C700, West Conshohocken, PA 19428-2959 or online at www.astm.org.)

SAE INTERNATIONAL

SAE-AMS-5513	-	Steel, Corrosion-Resistant, Sheet, Strip, and Plate 19Cr – 9.2Ni (SAE 30304) Solution Heat Treated
SAE-AMS-5630	-	Steel, Corrosion-Resistant, Bars, Wire, and Forgings, 17Cr – 0.52Mo (0.95 – 1.20C) (SAE 51440C)
SAE-AMS-6350	-	Steel Sheet, Strip, and Plate, 0.95Cr – 0.20Mo (0.28 - 0.33C) (SAE 4130)
SAE-AMS-QQ-A-250	-	Aluminum and Aluminum Alloy, Plate and Sheet; General Specification for
SAE-AS-5440	-	Hydraulic Systems, Military Aircraft, Design and Installation Requirements for
SAE-AS-28775	-	Packing, Preformed, MS28775 O-Ring

(Copies of these documents are available from SAE World Headquarters, 400 Commonwealth Drive, Warrendale, PA 15096-0001 or online at www.sae.org.)

2.4 Order of precedence. Unless otherwise noted herein or in the contract, in the event of a conflict between the text of this document and the references cited herein the text of this document takes precedence. Nothing in this document, however, supersedes applicable laws and regulations unless a specific exemption has been obtained.

3. REQUIREMENTS

3.1 Qualification. The packings furnished under this specification shall be products that are authorized by the qualifying activity for listing on the applicable qualified products list before contract award (see 4.3 and 6.3).

3.2 Materials. The packings shall be manufactured from a synthetic rubber which is compatible with hydraulic fluid conforming to MIL-PRF-87257. The polymeric ingredient of the synthetic rubber shall be a copolymer of butadiene/acrylonitrile. The finished product shall contain no substance which will adversely affect the properties of the fluid or the packings.

3.2.1 Recycled, recovered, or environmentally preferable materials. Recycled, recovered, or environmentally preferable materials should be used to the maximum extent possible, provided that the material meets or exceeds the operational and maintenance requirements, and promotes economically advantageous life cycle costs.

3.3 Dimensions and tolerances. The dimensions and tolerances of O-rings procured to this specification shall conform to SAE-AS-28775.

3.4 Physical properties. The physical properties of the rubber shall conform to values given in table I.

Downloaded from http://www.everyspec.com

3.4.1 Variations. The permissible variations in physical properties during actual production from those values obtained in the qualification tests shall be as follows:

a. Specific gravity ±0.02

b. Tensile strength, percent ±20

c. Elongation, percent ±20 (ultimate elongation shall not be less than 160 percent)

In addition, all physical properties tested shall meet the requirements specified in table I.

TABLE I. Physical properties.

Properties	**Requirements**
Original properties	
Specific gravity	As determined
Hardness, Type A, points	68, minimum
Tensile strength, psi	1350, minimum
Elongation, %	160, minimum (may not be lower than 160% in production)
Tensile stress (modulus) psi at 100% elongation	500, minimum
Temperature Retraction, TR-10 50% elongation and 10% return, °F	-49, maximum
Corrosion adhesion	Slight corrosion allowed on 4130 steel, none on other metals
Properties after aging 70 hours at 275±5 °F in MIL-PRF-87257	
Hardness change, Type A, points	+5, -15
Tensile strength decrease, %	50, maximum
Elongation decrease, %	35, maximum
Volume change, %	1 to 20
Compression set, 25% deflection % of original deflection	55, maximum
Temperature retraction, TR-10 50% elongation and 10% return, °F	-49, maximum
Properties after aging 70 hours at 275±5 °F in MIL-PRF-83282	
Hardness change, Type A, points	±10
Tensile strength decrease, %	40, maximum
Elongation decrease, %	45, maximum
Volume change, %	0.5 to 15
Compression set, 25% deflection, % of original deflection	55, maximum
Temperature retraction, TR-10 50% elongation and 10% return, °F	-47, maximum

3.5 Dynamic cycling. When tested in accordance with 4.6, the O-rings shall withstand a minimum of 75,000 cycles without failure. Failure is determined as that number of cycles at which a test ring leaks a total of 70 ml of hydraulic fluid. Each test consists of at least one test cell containing two rings. A minimum of six test runs shall be conducted making a total of six test cells to be tested. The number of cycles until failure shall be recorded. The highest number of cycles and the lowest number of cycles shall be discarded. The remaining 4 values shall be averaged and that value must be 75,000 minimum for the O-rings to pass the test.

Downloaded from http://www.everyspec.com

4. VERIFICATION

4.1 Classification of inspections. The inspection requirements specified herein are classified as follows:

a. Qualification inspection (see 4.3).

b. Conformance inspection (see 4.4).

4.2 Test conditions.

4.2.1 Fluid. The fluid aging in this specification shall be conducted using hydraulic fluids qualified to MIL-PRF-87257 and MIL-PRF-83282, as applicable. New fluid shall be used for each aging test.

4.2.2 Atmospheric conditions. All fluid cooling, conditioning, and physical property determinations shall be conducted in an atmosphere of 50±15 percent relative humidity and at a temperature of 75±5 °F.

4.3 Qualification inspection. Qualification inspection shall be performed on packings when a qualification sample is required (see 3.1). This inspection shall include the tests of 4.5 through 4.6.

4.3.1 Samples. Test samples shall be O-rings conforming to SAE-AS-28775 Size-214. SAE-AS-28775 Size-218 O-rings are also required for dynamic cycling test (see 4.6). Hardness shall be determined on hardness discs not less than ¼ inch thickness.

4.4 Conformance inspection. Conformance inspection shall include the examination of 4.4.3 and the conformance tests in 4.4.4.

4.4.1 Sampling for inspection. Sampling for conformance inspection shall be in accordance with MIL-STD-1916, except where otherwise indicated herein. Conformance tests are required for all production batches of material.

4.4.1.1 Batch. A batch shall be the quantity of material compounded on a mill or mixer at one time. A batch shall include SAE-AS-28775 Size-214 O-rings and hardness discs for conformance tests. A batch shall consist of a maximum of 200 pounds. If more than 200 pounds of material is produced at one time, conformance tests shall be conducted on each 200 pounds of material.

4.4.2 Conformance test samples. The test samples shall be SAE-AS-28775 Size-214 O-rings conforming to SAE-AS-28775. Hardness discs shall be used for hardness determinations.

4.4.3 Inspection of the end item. Examination of the end item shall be in accordance with the classification of defects, inspection levels, and acceptance criteria as specified, in the contract or purchase order (see 6.2). The lot size, for the purpose of determining the sample size in accordance with MIL-STD-1916, shall be expressed in units of O-rings.

4.4.3.1 Examination for defects in appearance and workmanship. The examination shall be in accordance with MIL-STD-413. The sample size shall be in accordance with an inspection level of MIL-STD-1916 and acceptance criteria as specified (see 6.2).

4.4.3.2 Examination for dimensional defects. The examination shall be made to the tolerances specified in SAE-AS-28775. Each size shall be inspected for dimensional and tolerance conformance. Each size shall be independent of other sizes for sampling quantities. The sample size shall be in accordance with an inspection level of MIL-STD-1916 and acceptance criteria as specified (see 6.2).

4.4.4 Conformance tests. The following tests shall be conducted on each batch of material (see 4.4.2) and table I:

Original Properties Tests only

Specific gravity

Hardness

Tensile strength

Elongation

Downloaded from http://www.everyspec.com

Size-214 in accordance with SAE-AS-28775 shall be used as test samples. Hardness discs shall be used for the hardness test.

4.4.4.1 Rejection criteria. A lot shall be rejected upon the failure of any sample to meet the test requirements specified herein.

4.5 Test methods.

4.5.1 Physical properties. Unless otherwise specified herein, physical properties shall be determined in accordance with ASTM D1414 (see 3.4).

4.5.2 Fluid aging. The containers used for fluid aging shall be of the conventional fruit jar type. The cover for the container shall be either the two piece (lid and ring) fruit jar type, except that the lid shall be inverted in order that the lid's flat surface comes in contact with the sealing surface of the container, or a glass cover held firmly in place by a wire-lever apparatus. Unclean, uneven sealing surfaces of the cover and container and oil contact with the sealing surfaces shall be avoided. During oil aging the O-rings shall be suspended in the oil by a glass or nichrome wire rack in such a manner that the O-rings will not come in contact with any part of the container. The hardness discs shall be placed loosely in the jars. Immediately after the aging period and before physical property determinations, the O-rings and hardness discs shall be cooled in new fluid for a period of not less than 30 minutes at 77±5 °F.

4.5.3 Corrosion and adhesion. SAE-AS-28775 Size-214 O-rings, two for each metallic plate below and using whole uncut rings, shall be prepared for corrosion testing by inserting sufficient quantities of the seals in a desiccator or similar humidity chamber maintained at 92 percent minimum relative humidity and 75±5 °F for at least 72 hours. Plates of the metals listed below shall be polished to a surface roughness of 4 to 16 roughness height range (RHR) in accordance with ASME B46.1. The edges shall also be polished to reduce the formation of edge corrosion. The plates shall be washed with toluene or aliphatic naphtha, or similar decreasing agent that will produce a clean dry surface free from film. The metals used shall be as follows:

SAE-AMS-QQ-A-250	Aluminum Alloy 2024
SAE-AMS-QQ-A-250	Aluminum Alloy 6061
SAE-AMS-QQ-A-250	41uminum Alloy 7075
SAE-AMS-5630	440C Stainless Steel
SAE-AMS-5513	304 Stainless Steel
SAE-AMS-6350	4130 Steel, Aircraft Quality

The humidified seals and the metallic plates shall be immersed in MIL-PRF-6083, Type I fluid and drained to the drop point. The seals and plates shall then be so laid together in a stack that at least two whole seals contact each specified metal. The stack shall be held together with a pressure of 20 to 30 pounds and placed in a desiccator which is maintained at not less than 92 percent relative humidity at 75±5 °F. This relative humidity may be produced by the use of salt of sufficient concentration in solution with distilled water. No more than 15 minutes should be required for assembling the test samples. Time of humidity exposure for this portion of test shall be 14 days. At the termination of this test, the procedures outlined below shall be followed:

a. The surface of the plates which were in contact with the seals shall be inspected for discoloration, deposits, pitting, or other evidence of corrosion or adhesion. If any exist, the surfaces of the plates shall be washed in aliphatic naphtha. Deposits determined as rubber compounds or elements therefrom, which can be removed by this process and which do not occur on other surfaces of the plates, shall be construed as adhesion.

b. Any pits or eroded marks remaining after this process shall be construed to be corrosion. Discoloration or staining (marks which do not physically affect the surfaces of the plates and which easily wash or buff off) shall not be considered detrimental. If any doubt should arise about the presence of pitting, erosion or corrosion on the metal plates from the O-rings, a microscope of approximately 10- to 15-power magnification shall be used to determine the actual condition.

Downloaded from http://www.everyspec.com

4.6 Dynamic cycling. The dynamic cycling shall be performed using test cells described in figures 1 and 2. The rod shown in the test cell diagrams may be activated using the apparatus shown in 6.4 or with any activating system that cycles the rod in accordance with 4.6a through 4.6i. During the test, the test cell shall be maintained at the test temperature by enclosing the entire cell in a temperature-controlled chamber (see 6.4). The testing conditions are as follows: (see 3.5)

a. Test temperature – 275 °F (135 °C).

b. Pressure – 1500 pounds-force per square inch gauge (psig) [10,300 kilopascals (kPa)].

c. Stroke length – 4 inches (10.2 cm).

d. Cycling rate – 30 cycles/min, where one cycle is defined as both the forward and return strokes.

e. Pressure shall be applied for one complete cycle and pressure shall be reduced to zero during the next cycle.

f. Hydraulic fluid – MIL-PRF-87257.

g. Tests shall be conducted without back-up rings. A steel spacer shall be used to maintain the proper gap dimension.

h. Diametral clearance between rod and cell shall be maintained at 0.004 inch (0.0102 cm).

i. Surface finish on test rods shall be between 10 and 20 micro-inches.

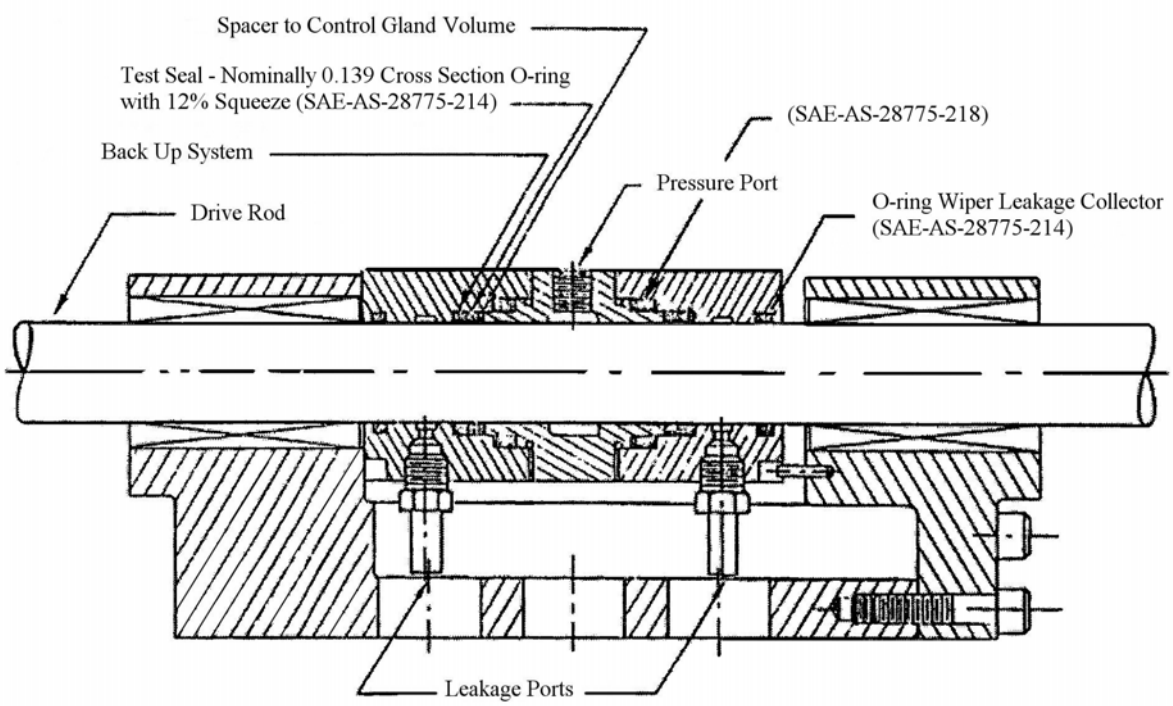

ONE INCH ROD TEST FIXTURE - VARIABLE STROKE

FIGURE 1. Complete assembly of test cell.

Downloaded from http://www.everyspec.com

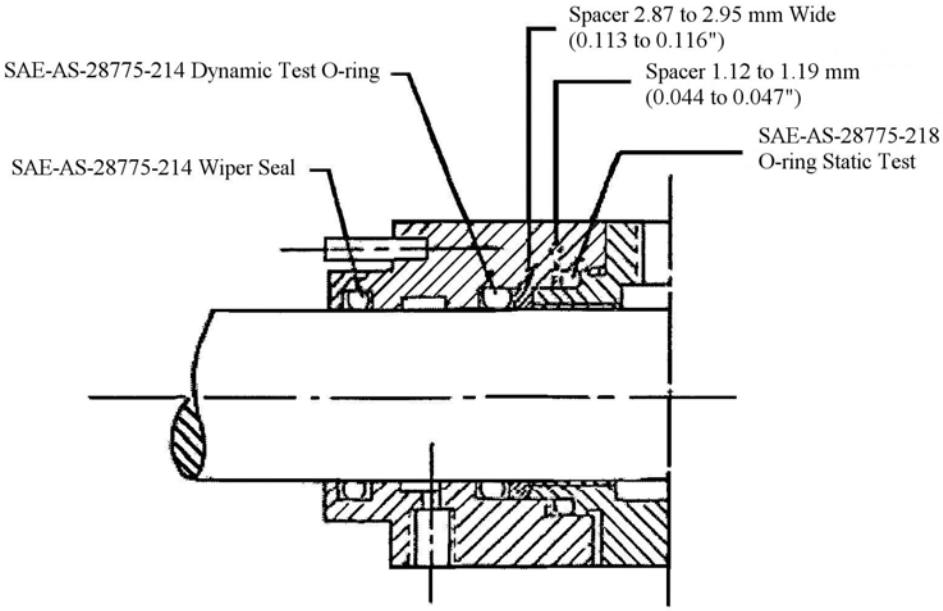

FIGURE 2. Cylinder assembly without back-up rings.

4.6.1 Procedure. The following procedure shall be used in conducting dynamic O-ring evaluations:

a. Select 4 SAE-AS-28775 Size-214 unaged or unconditioned O-rings.

b. Lubricate the rings with fresh MIL-PRF-87257 hydraulic fluid and assemble the rings and spacers into the test cylinders as shown in figure 2.

c. Rod and gland dimensions shall conform to SAE-AS-5440.

d. Fill with MIL-PRF-87257 hydraulic fluid taking care to exclude entrapped air.

e. Bleed system at test cell locations to remove entrapped air in lines.

f. Perform a check of final test cell installation in test fixtures and insure that the test cells do not translate along the rod by more than 0.005 inch (0.0127 cm).

g. Set dynamic conditions as follows:

(1) Stroke – 4 inches (101.6 mm).

(2) Rate – 30 cycles/minute.

(3) Pressure – 1500 psig (10,300 kPa).

(4) Temperature – 275 °F (135 °C).

(5) Start tests by turning on heating elements.

(6) Start test cell temperature recorder to record the temperature of each cell throughout the test.

(7) After temperature reaches the predetermined set point, start cycling and adjust temperature as required.

(8) Start leakage rate recorder at the same time that cycling is initiated.

h. Cycle O-rings at given set of conditions until failure of the rings.

i. Failure is specified as the number of cycles at which either test ring in either test cell leaks a total of 2.7 oz (70 ml) of hydraulic fluid. At this point, the test cell having the failed ring will be shut down and the remaining cell operated until one or both of the two remaining test rings fail by leaking more than 2.7 oz (70 ml) of hydraulic fluid.

Downloaded from http://www.everyspec.com

4.6.2 Interpretation and data recording. Each test ring shall be analyzed to determine, if possible, the mode of failure. The method of inspection shall be as follows:

a. Carefully disassemble each test cell.

b. Note the position and condition of each test ring prior to removal.

c. Inspect test cell for wear caused by the test rod touching the cell during cycling.

d. Carefully inspect each ring for cause of failure. Note as to whether the ring was nibbled or whether it had been extruded, pinched, or cracked. Also note any set the ring may have taken.

e. Note if total leakage occurred slowly over a long period of time or if it occurred suddenly over a short number of cycles.

f. Note any twisting, turning, or preferential wear patterns on test ring.

g. Photograph each ring for permanent record of wear pattern.

h. Record number of cycles to total leakage of 2.7 oz (70 ml).

4.6.3 Repeat testing. A minimum of six test runs shall be conducted for qualification testing. The highest number of cycles and the lowest number of cycles shall be discarded. The remaining four values shall be averaged.

5. PACKAGING

5.1 Packaging. For acquisition purposes, the packaging requirements shall be as specified in the contract or order (see 6.2). When packaging of materiel is to be performed by DoD or in-house contractor personnel, these personnel need to contact the responsible packaging activity to ascertain packaging requirements. Packaging requirements are maintained by the Inventory Control Point's packaging activities within the Military Service or Defense Agency, or within the military service's system commands. Packaging data retrieval is available from the managing Military Department's or Defense Agency's automated packaging files, CD-ROM products, or by contacting the responsible packaging activity.

6. NOTES

(This section contains information of a general or explanatory nature that may be helpful, but is not mandatory.)

6.1 Intended use. This specification covers O-ring packings intended for shipboard use at a temperature range of -65 to 275 °F in hydraulic systems in accordance with SAE-AS-5440. These rings are suitable for use with hydraulic fluids conforming to MIL-PRF-87257 and MIL-PRF-83282. Use at 275 °F will be limited with this material. A material providing better 275 °F aging is covered by SAE-AMS-P-83461. This document replaces the Navy-SH requirements for MIL-P-25732.

6.2 Acquisition requirements. Acquisition documents should specify the following:

a. Title, number, and date of this specification.

b. Sizes in accordance with SAE-AS-28775.

c. Quantity.

d. Applicable federal stock number.

e. Conformance acceptance criteria for inspection of end item and conformance tests (see 3.4.1, 4.4.3, and 4.4.4).

f. Packaging requirements (see 5.1).

Downloaded from http://www.everyspec.com

6.3 Qualification. With respect to products requiring qualification, awards will be made only for products which are, at the time of award of contract, qualified for inclusion in Qualified Products List QPL No. 32287 whether or not such products have actually been so listed by that date. The attention of the contractors is called to these requirements, and manufacturers are urged to arrange to have the products that they propose to offer to the Federal Government tested for qualification in order that they may be eligible to be awarded contracts or orders for the products covered by this specification. Information pertaining to qualification of products may be obtained from Commander, Naval Sea Systems Command, ATTN: SEA 05S, 1333 Isaac Hull Avenue, SE, Stop 5160, Washington Navy Yard DC 20376-5160 or emailed to CommandStandards@navy.mil. An online listing of products qualified to this specification may be found in the Qualified Products Database (QPD) at https://assist.daps.dla.mil.

6.4 Example of dynamic cycling apparatus. The apparatus shown in figure 3 is capable of evaluating O-rings under a high pressure, high temperature, cycling environment until failure. The apparatus is capable of testing four O-rings simultaneously. Two test cells are run concurrently with two O-rings in each cell.

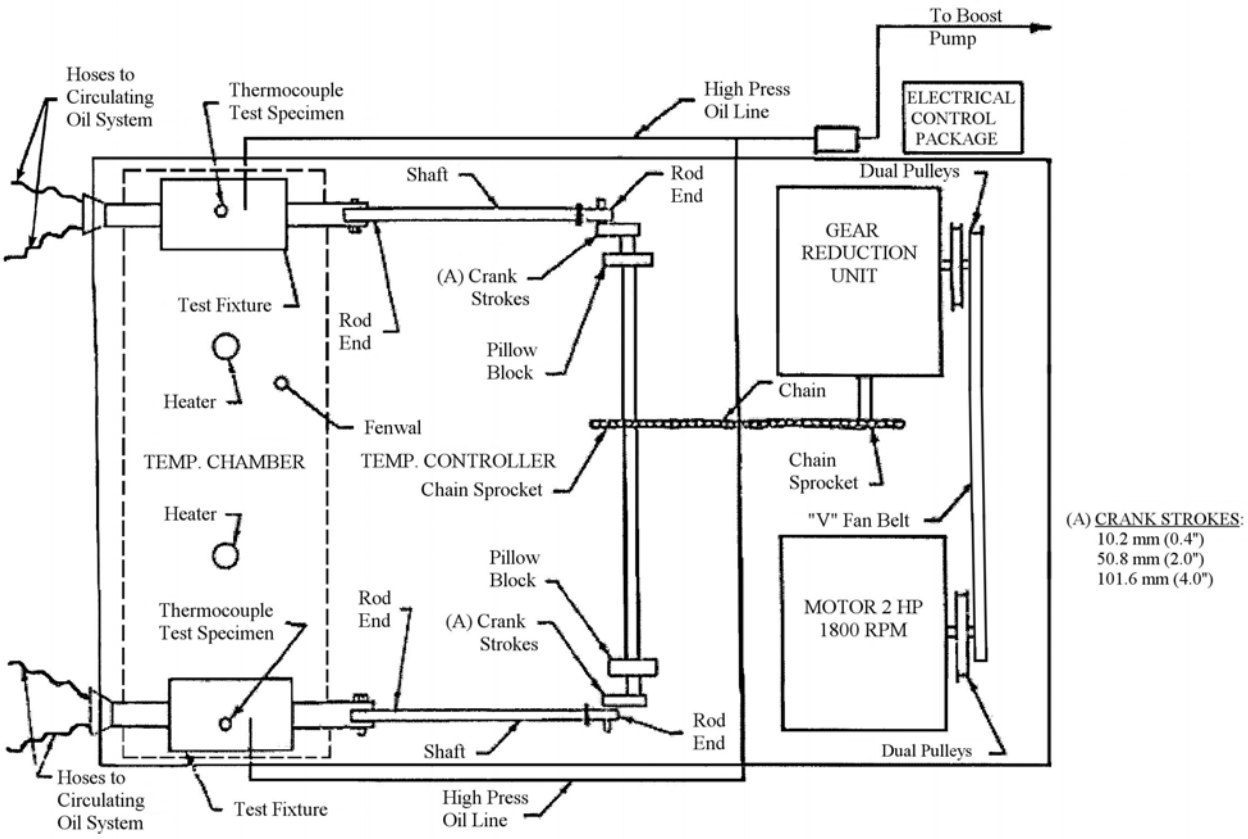

FIGURE 3. O-ring cycle test set-up.

Downloaded from http://www.everyspec.com

6.5 Identification. All O-rings should be individually packaged and each envelope should have the following information printed on the outside:

National stock number

Military part number

Material specification

Manufacturer's name

Manufacturer's compound number

Manufacturer's batch number

Contract number

Cure date

6.6 Subject term (key word) listing.

Elastomeric

Rubber

Custodians:
Army – MI
Navy – SH
Air Force – 99

Review Activities:
Army – MR
Navy – AS, CG, NP
Air Force – 03, 11, 71
DLA – IS
GSA – FAS

Preparing Activity:
Navy-SH
(Project 5330-2008-015)

NOTE: The activities listed above were interested in this document as of the date of this document. Since organizations and responsibilities can change, you should verify the currency of the information above using the ASSIST Online database at https://assist.daps.dla.mil.