INCH-POUND

MIL-PRF-29597C (NAVY)
w/AMENDMENT 3
21 July 2010

SUPERSEDING
MIL-PRF-29597C (NAVY)
w/AMENDMENT 2
21 February 2007

PERFORMANCE SPECIFICATION

BAG, ODOR BARRIER, FLEXIBLE - FOR FOOD CONTAMINATED PLASTIC WASTE

This specification is approved for use by the Department of the Navy and is available for use by all Departments and Agencies of the Department of Defense.

1. SCOPE

1.1 Scope. This specification covers the requirements of flexible odor barrier bags used for the disposal of food contaminated plastic waste.

1.2 Classification. Bags are furnished in the following types and classes:

1.2.1 Types and classes.

Type I – Standard (Surface ship use only)

Class 1 – Pressure sensitive adhesive closure
Class 2 – Heat seal closure

Type II – High strength (Submarine use only)

Class 2 – Heat seal closure

Comments, suggestions, or questions on this document should be addressed to: Commander, Naval Air Warfare Center Aircraft Division, Code 4L8000B120-3, Highway 547, Lakehurst, NJ 08733-5100 or emailed to michael.sikora@navy.mil. Since contact information can change, you may want to verify the currency of this address information using the ASSIST Online database at https://assist.daps.dla.mil.

AMSC N/A FSC 8105

1.2.2 Sizes. Odor barrier bags are furnished in the following sizes:

A - 50 x 36 inches
B - 27 x 24 inches
C - 34 x 31 inches
D - 40 x 17 inches

1.3 Part or identifying number (PIN). The PIN is created as follows:

M29597-tyXclXszX

Type (ty1 or ty2), Class (cl1 or cl2), Size (A B, C, or D)

M prefix and specification number

Example: 34 inch by 31 inch, Type I, Class 1 bags supplied to MIL-PRF-29597C are identified as: M29597-ty1cl1szC.

2. APPLICABLE DOCUMENTS

2.1 General. The documents listed in this section are specified in sections 3 or 4 of this specification. This section does not include documents cited in other sections of this specification or recommended for additional information or as examples. While every effort has been made to ensure the completeness of this list, document users are cautioned that they must meet all specified requirements of documents cited in sections 3 or 4 of this specification, whether or not they are listed.

2.2 Government documents.

2.2.1 Specifications and standards. The following specifications and standards form a part of this document to the extent specified herein. Unless otherwise specified, the issues of these documents are those cited in the solicitation or contract.

DEPARTMENT OF DEFENSE SPECIFICATIONS

MIL-PRF-680	-	Degreasing Solvent.
MIL-DTL-5624	-	Turbine Fuel, Aviation, Grades JP-4, JP-5, and JP-5/JP-8 ST.
MIL-PRF-83282	-	Hydraulic Fluid, Fire Resistant, Synthetic Hydrocarbon Base, Metric, NATO Code Number H-537.

DEPARTMENT OF DEFENSE STANDARDS

MIL-STD-3010 - Test Procedures for Packaging Material

(Copies of these documents are available online at https://assist.daps.dla.mil/quicksearch/ or https://assist.daps.dla.mil or from the Standardization Document Order Desk, 700 Robbins Avenue, Building 4D, Philadelphia, PA 19111-5094.)

2.3 Non-Government publications. The following documents form a part of this document to the extent specified herein. Unless otherwise specified, the issues of these documents are those cited in the solicitation or contract.

AMERICAN SOCIETY FOR QUALITY (ASQ)

ASQ-Z1.4 - Procedures, Sampling and Tables for Inspection by Attributes. (DoD adopted)

(Copies of this document are available from http://www.asq.org or the American Society for Quality, 600 Plankinton Avenue, Milwaukee, WI 53203.)

AMERICAN SOCIETY FOR TESTING AND MATERIALS INTERNATIONAL (ASTM)

ASTM-D882 - Plastic Sheeting, Tensile Properties of Thin.
ASTM-D3985 - Oxygen Gas Transmission Rate Through Plastic Film Sheeting Using a Kilometric Sensor, Standard Test Method for.
ASTM-F88 - Seal Strength of Flexible Barrier Materials, Test Method for.
ASTM-F1249 - Water-Vapor Transmission Rate through Plastic Film and Sheeting Using a Modulated Infrared Sensor, Standard Test Method for.

(Copies of these documents are available from www.astm.org or ASTM International, 100 Barr Harbor Drive, West Conshohocken, PA 19428-2959.)

2.4 Order of precedence. In the event of a conflict between the text of this document and the references cited herein, the text of this document takes precedence. Nothing in this document, however, supersedes applicable laws and regulations unless a specific exemption has been obtained.

3. REQUIREMENTS

3.1 First article. When specified (see 6.2), a sample shall be subjected to first article inspection in accordance with 4.2 and 6.3.

3.2 Materials. Odor barrier bags shall be made from such materials and processes as to ensure compliance with the requirements of this specification.

3.2.1 Barrier material. Barrier material shall meet all of the performance requirements in table I, 3.2.1.1, and 3.2.2 of this specification.

TABLE I. Barrier material requirements.

PROPERTY	TYPE I	TYPE II	TEST REFERENCE
Thickness, inches (max)	0.010	0.010	4.4.1
Water vapor transmission rate, grams/square meter/day (max)	6.0	6.0	4.4.2
Oxygen transmission rate, cubic centimeters/square meter/day (max)	1.0	1.0	4.4.2
Tensile breaking factor, lbs/inch (min)	20	40	4.4.3
Elongation, percent (min)	400	480	4.4.3
Tear strength Peak load, lbs (min) Energy to break, in-lbs (min)	 8.0 15.0	 24 41	4.4.4
Puncture resistance, lbs (min)	9.0	19	4.4.5
Heat seal strength Breaking strength, lbs/inch (min) Energy to break, in-lbs/inch (min)	 12 16	 24 77	4.4.6
Odor barrier effectiveness	Rating of 1 or less on each odor substrate		4.4.10

3.2.1.1 Material compatibility. After the fluid immersion conditioning specified in 4.4.11, the barrier materials shall be tested for Tensile Breaking Factor, Elongation, and Tear Strength properties. The test requirements after immersion shall be as follows:

a. Type I: 50% of the obtained test values of 4.4.3 and 4.4.4.
b. Type II: 75% of the obtained test values of 4.4.3 and 4.4.4.

3.2.2 Adhesive (class 1 only). The adhesive used in type I bags shall be acrylic with no fibers or carrier within the adhesive and shall be applied at a rate of 1.2 to 1.5 grains per square inch. In addition, the adhesive shall meet all the requirements in table II.

TABLE II. Adhesive properties.

PROPERTY	CLASS 1	TEST REFERENCE
Adhesive seal strength Initial seal strength, oz/inch (min) Re-seal strength, oz/inch (min)	 48 35	4.4.7
Adhesive seal integrity	No leakage	4.4.8
Relaxation modulus ratio	0.066 to 0.250	4.4.9

3.3 Form. The barrier material shall be converted into and furnished as bags. Nominal bag sizes and minimum inside width dimensions shall be as specified in table III. Heat seals shall be 0.25 ± 0.05 inch (0.64 ± 0.13 centimeter).

TABLE III. Bag sizes.

SIZE	NOMINAL LENGTH (INCHES)	NOMINAL WIDTH (INCHES)	MINIMUM INSIDE WIDTH (INCHES)
A	50	36	34.5
B	27	24	22.5
C	34	31	29.5
D (Type II only)	40	16.75	15.75

3.3.1 Type I, class 1. Type I, class 1 bags shall have either two heat-sealed sides with the bottom folded and creased, or 3 heat-sealed sides. One side of the bag opening shall extend 2.25 to 2.75 inches (5.7 to 7.0 centimeters) higher than the other side of the bag opening creating a flap. A 4-inch-wide pressure sensitive adhesive (PSA) strip shall be placed across the entire width of the bag opening so that two inches of the PSA adheres to the lower edge of the bag opening and two inches adheres to the flap (see figure 1). The PSA shall be covered with two easily removable release liners that shall not interfere with the initial opening of the bag. The bag shall be sealed by removing both release liners and folding the flap over the lower edge effecting adhesive to adhesive contact along the entire width of the bag.

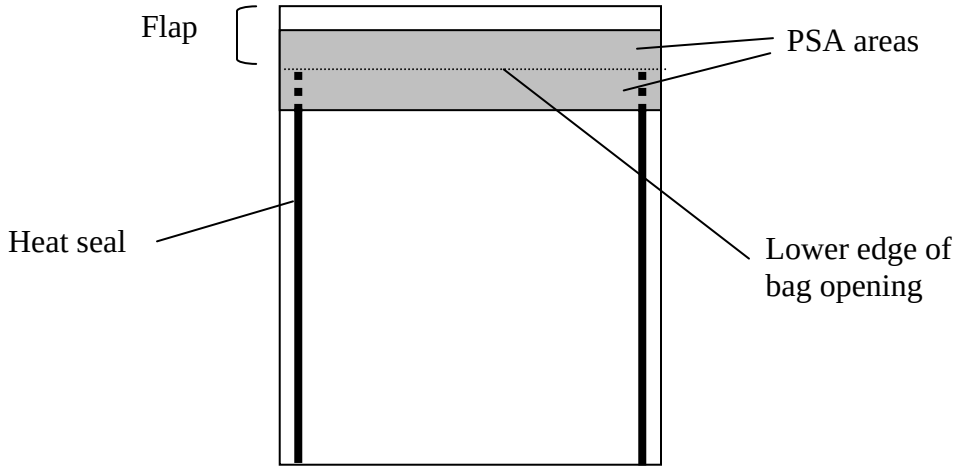

FIGURE 1. Class 1 bag construction.

3.3.2 Type I, class 2. Type I, class 2 bags shall be formed with one heat seal from rolls of flat lay tubing, two heat seals with the bottom folded and creased, or three heat seals. Bags shall be supplied on rolls (see 3.3.4). Perforations shall be created to enable bags to be removed from the roll by hand. The perforations shall occur below the heat seal and shall be less than 0.25 inch (0.64 centimeter) below the effected heat seal. Perforations shall not interfere with the integrity of the seal (see 4.3.2).

3.3.3 Type II, class 2. Type II, class 2 bags shall have three heat-sealed sides formed from two sheets of barrier material. Bags shall be supplied on rolls (see 3.3.4). Perforations shall be created to enable bags to be removed from the roll by hand. The perforations shall occur below the heat seal that serves as the bottom of the bag, and shall be less than 0.25 inch (0.64 centimeter) below the effective heat seal. Perforations shall not interfere with the integrity of the seal (see 4.3.2).

3.3.4 Rolls. The average roll length for sizes A, B, and C bags shall be 75 ± 0.5 yards (69 ± 0.5 meters). The roll for size D bags shall have 50 bags per roll. The width of roll material shall be 36 ± 0.25 inches (91 ± 0.64 centimeters) for size A bags, 24 ± 0.25 inches (61 ± 0.64 centimeters) for size B bags, 31 ± 0.25 inches (79 ± 0.64 centimeters) for size C bags, and 16.75 ± 0.25 inches (33 ± 0.64 centimeters) for size D bags. The length of the core shall be equal to the width of roll material with a tolerance of + 0.25 inch (0.64 centimeter). The core shall be rigid to prevent distortion of the roll during use and shipment. Each roll shall be restrained to prevent unwinding (see 4.3.2).

3.3.5 Identification sheet. Each roll of bags shall contain an identification sheet with the specification number, manufacturer's name, manufacturer's designation, lot number, date of manufacture (month and year), national stock number, type, class, and size. Class 2 bags shall also contain heat sealing information; type of equipment, temperature, pressure, and dwell time (see 4.3.2).

3.4 Workmanship. The barrier material shall be free from any foreign matter. The barrier material edges shall be cut and trimmed of any selvage. The barrier material shall be free from holes, tears, cuts, wrinkles, or other imperfections (see 4.3.2).

4. VERIFICATION

4.1 Classification of inspections. The inspection requirements specified herein are classified as follows:

a. First article inspection (see 4.2).

b. Conformance inspection (see 4.3).

4.2 First article inspection. First article inspection shall consist of all the tests and examinations specified in this specification.

4.3 Conformance inspection. Conformance inspections shall consist of the tests listed in table IV and the examinations listed in 4.3.2.

4.3.1 Sampling for conformance inspection. For the purpose of determining the sample size in accordance with ASQ-Z1.4, the lot size shall be expressed in number of bags produced in one production run and shall use an inspection level of S-1 for testing and S-3 for visual examination.

TABLE IV. Conformance tests.

CHARACTERISTICS	REQUIREMENT PARAGRAPH	TEST PARAGRAPH
Thickness	Table I	4.4.1
Tensile breaking factor	Table I	4.4.3
Puncture	Table I	4.4.5
Heat seal energy to break	Table I	4.4.6
Adhesive seal integrity (class 1, only)	Table I	4.4.8

4.3.2 Visual examination of end item for defects in form, thickness, identification, PSA material, and workmanship. The sample unit for the end item inspection shall be one bag. The sample unit shall be visually inspected and measured to ensure it meets the requirements specified in 3.2.1 through 3.4.

4.4 Test methods. Unless otherwise specified, all tests shall be conducted as specified herein. Barrier material and adhesive samples shall be conditioned for 24 hours (minimum) in a circulating air environment having a relative humidity of 50 ± 5 percent and a temperature of 70 to 76 ºF (21 to 25 ºC).

4.4.1 Thickness. Thickness shall be determined to the nearest 0.001 inch in accordance with MIL-STD-3010, Method 1003, using 10 stacked specimens.

4.4.2 Transmission rates. The water-vapor transmission rate shall be measured in accordance with ASTM-F1249, using 100 percent relative humidity on one side of the film and flowing, dry detector gas (nominally, 99.7 percent nitrogen) on the opposite side. The oxygen transmission rate shall be tested in accordance with ASTM-D3985 at 73 ± 1°F (23 ±0.5 °C), at less than 1 percent relative humidity, using no less than 99.9 percent oxygen on one side of the film and a flowing, oxygen-free detector gas (nominally, 98 percent nitrogen and 2% hydrogen) on the opposite side. Transmission rates shall be determined using 2 replicates.

4.4.3 Tensile breaking factor and elongation. The barrier material shall be tested for tensile breaking factor and elongation in accordance with ASTM-D882. Determinations shall be made using 5 replicates for each principal direction.

4.4.4 Tear strength by trapezoid method.

4.4.4.1 Specimen preparation. Specimens 3 inch by 6 inch shall be used. Each specimen shall be marked and notched as shown on figure 2 using a trapezoidal template centered on the 6 inch dimension. The template shall be slotted to a depth of 0.625 inch and located to place the position of the notch at the center of the 6 inch length of the specimen. The notch shall be made using a sharp blade. The 3 inch direction shall be the test direction. Five specimens shall be prepared for each principal direction.

4.4.4.2 Testing apparatus. A tensile tester with a constant rate of extension (CRE) shall be used having rubber faced grips 3 inches wide, perpendicular to the direction of extension. The grips shall prevent slippage during testing. Initial separation shall be 1 ± 0.05 inch. Rate of grip separation shall be 12 ± 0.5 inch/minute.

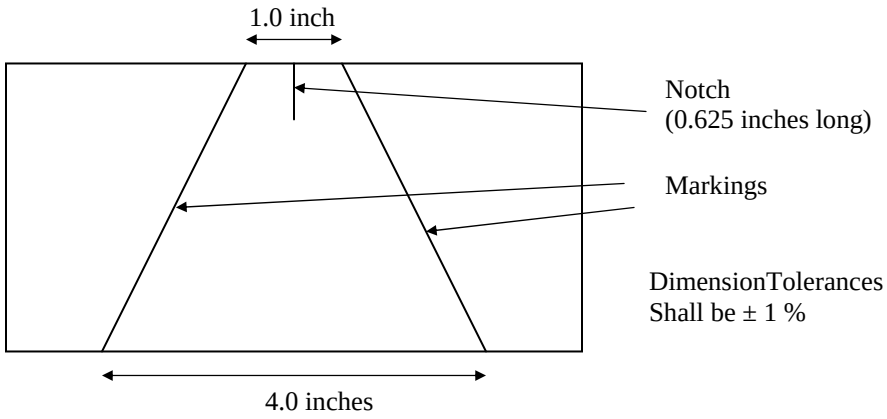

FIGURE 2. Marking and notching of tear strength specimen.

4.4.4.3 Procedure. The test specimen shall be secured in the grips by clamping the 3 inch edge of one grip along one marking and repeating the process for the other marking. The notched edge of the specimen shall be even with the front of the grips. Initiate testing and record the tearing force until the material has completely separated. Five specimens from each principal direction shall be tested. The maximum tearing force (lbs) and energy to break (in.-lbs) shall be determined. The energy to break shall be calculated by determining the area under the force displacement curve.

4.4.5 Puncture resistance. Puncture resistance shall be determined in accordance with MIL-STD-3010, test method 2065. Five specimens shall be tested with the bag interior side up. Determinations shall be made using 5 replicates for each principal direction.

4.4.6 Heat seal strength. The heat seal strength shall be tested in accordance with ASTM-F88 determining both peak load and energy to break. Energy to break shall be obtained by measuring the area under the position (inches)/load (lbs) curve. Determinations shall be made using 5 replicates for each principal direction.

4.4.7 Adhesive seal strength. The peel adhesion shall be tested in accordance with ASTM-F88, using a 15 minute dwell prior to testing. After separation, the strips shall be carefully resealed and the test repeated. Sealing and resealing shall be accomplished with a hard rubber roller applying no more than 40 psi to the surface.

4.4.8. Adhesive seal integrity. The adhesive seal shall be tested as follows. Close the top of the bag securely using the PSA strip. Clamp the full width of the bottom of the bag, invert the clamped bag, and suspend it so that the clamps are level and the top of the bag hangs free. Make

a small hole in the side of the bag near the clamps and add enough solution 0.1 percent Aerosol OT with a small amount of red dye so that the water depth is 2 to 2.5 inches and uniform across the bag width. After 15 minutes, the bag shall be tested for leakage by lightly touching a white laboratory tissue to all parts of the sealed area.

4.4.9 Relaxation modulus ratio. Relaxation modulus ratio shall be tested at 70 ºC with a strain of 25 percent using a constant strain rheometer with parallel plate in shear mode. The relaxation modulus ratio shall be calculated by dividing relaxation modulus at 300 seconds by the relaxation modulus at 0.1 second.

4.4.10 Odor barrier effectiveness.

4.4.10.1 Odor substrates. Three odor substrates (generators) shall be used:

a. Raw salmon fish (aged a minimum of 3 days at room temperature)
b. Raw chicken (aged a minimum of 3 days at room temperature)
c. Milk (aged a minimum of 1 week at room temperature)

4.4.10.2. Sample preparation. Prepare two 3.5 x 3.5-inch bags for each substrate by heat sealing three sides (bag heat seals shall meet the requirements of table I.) Fold a laboratory grade tissue (15 by 17 inches) to 2 square inches. Add 0.5 to 1 gram of a substrate to the center of the folded tissue. Fold the tissue once more to cover the substrate. Place the tissue in the bag and heat seal the opening. Place the sealed bag in a one quart laboratory jar. The jar shall be tightly closed using a foil lined plastic lid.

4.4.10.3 Procedure and evaluation. The closed jars shall be placed in an oven maintained at 104 ± 2 °F (40 ± 1 °C). After 60 days, the jars shall be removed from the oven, each bag shall be transferred to a clean jar and replaced in the oven, except for the aged milk bag, which shall be allowed to remain at room temperature. After one hour, observe the odor in one jar for each substrate by lifting only one side of the lid (keeping the other in contact with the jar) and immediately placing the nose in the opening. Odor shall be graded as:

0 - No odor
1 - Faint, unobjectionable odor
2 - Moderate odor
3 - Strong odor

The odor of the plastic bag itself shall not be considered objectionable.

4.4.11 Material compatibility. Barrier material samples shall be immersed in the following fluids for 7 days at 68 ± 5 ºF (20 ± 3 ºC):

a. Cleaning solvent in accordance with MIL-PRF-680, type II.
b. Hydraulic fluid in accordance with MIL-PRF-83282.
c. JP-8 grade kerosene in accordance with MIL-DTL-5624.

After immersion, samples shall be visually examined and then tested for tensile breaking factor, elongation, and tear strength properties.

5. PACKAGING

5.1 Packaging. For acquisition purposes, the packaging requirements shall be as specified in the contract or order (see 6.2). When packaging of materiel is to be performed by DoD or in-house contractor personnel, these personnel need to contact the responsible packaging activity to ascertain packaging requirements. Packaging requirements are maintained by the Inventory Control Point's packaging activities within the Military Service or Defense Agency, or within the military service's system commands. Packaging data retrieval is available from the managing Military Department's or Defense Agency's automated packaging files, CD-ROM products, or by contacting the responsible packaging activity.

6. NOTES

(This section contains information of a general or explanatory nature that may be helpful, but is not mandatory.)

6.1 Intended use. The bags provide an odor barrier for the containment of food-contaminated plastic waste in shipboard applications where at-sea disposal of plastics is prohibited. There are no commercial equivalents that meet all of the physical and mechanical requirements necessary for this application. In use, filled bags are intended to remain aboard ship for prolonged periods of time in consonance with naval deployments. Type I bags are to be used by surface ships for containment of plastic waste processed plastic disks and loose plastic waste material prior to disposal. Type II bags are for use in submarine compaction units.

6.2 Acquisition requirements. Acquisition documents should specify the following:

a. Title, number, and date of this specification.
b. Bag type and class (see 1.2).
c. Bag size and quantity (see 1.2.2).
d. Rolls or packaged individual bags.
e. When first article is required (3.1).
f. Packaging requirements (see 5.1).

6.3 First article. The contracting officer should provide specific guidance to offerors whether the first article samples should be a pre-production item, a first production item, a sample selected from the first production items or a standard production item from the contractor's current inventory (see 3.1 and 4.2). The contracting officer should also include specific instructions in acquisition documents regarding arrangements for submission of Material Safety Data Sheets (MSDS) prior to contract award, testing, approval of first article test results, and disposition of first articles. Invitations for bids should provide that the Government reserves the right to waive requirements for first article inspection to those bidders offering a product, which has been previously acquired or tested by the Government. Bidders offering such products, that wish to rely on such production or test, must furnish evidence with the bid that the

prior Government approval is acceptable for the pending contract. Bidders should not submit alternate bids unless specifically requested to do so in the solicitation. As Type II bags are critical submarine use items, all prospective offerors must submit either a first production item or standard production item from the manufacturer's current inventory for First Article Inspection. In order to standardize testing and mitigate risk, First Article Inspection must be performed at the Naval Air Warfare Center Aircraft Division, Code 6.7.2.4, Lakehurst, NJ 08733 prior to contract award.

6.3.1 Prior approval. If a contractor has previously delivered an acceptable product meeting the requirements of this specification, waiver of the first article inspection requirement (see 4.2) is at the discretion of the procuring activity for a period of time not to exceed 2 years (see 6.2).

6.3.2 First article sample. The first article sample should be produced using the same plant facilities intended for the production run. Failure of the first article sample to meet all the requirements of this specification is cause for rejection.

6.4 Cross reference. The types under MIL-PRF-29597B are covered in this revision as follows:

Description	MIL-PRF-29597C Designation	MIL-PRF-29597B Designation
Pressure sensitive adhesive closure	Class 1	Type I
Heat seal closure	Class 2	Type II
Standard (Surface ship use only)	Type I	----------
High strength (Submarine use only)	Type II	----------

6.5 Subject term (key word) listing.

Barrier material
Heat-seal
Odor
Oxygen gas transmission rate
Permeability
Plastic film
Waste bag
Water vapor transmission rate

6.6 Amendment notations. The margins of this specification are marked with vertical lines to indicate modifications generated by this amendment. This was done as a convenience only and the Government assumes no liability whatsoever for any inaccuracies in these notations. Bidders and contractors are cautioned to evaluate the requirements of this document based on the entire content irrespective of the marginal notations.

CONCLUDING MATERIAL

Custodian:
Navy – AS

Preparing activity:
Navy - AS

(Project 8105-2010-003)

Review activities:
Navy – SA, SH

NOTE: The activities listed above were interested in this document as of the date of this document. Since organizations and responsibilities can change, you should verify the currency of the information above using the ASSIST Online database at https://assist.daps.dla.mil.