Downloaded from http://www.everyspec.com

NOTE: The document identifier and heading has been changed on this page to reflect that this is a performance specification. There are no other changes to this document. The document identifier on subsequent pages has not been changed, but will be changed the next time this document is revised.

INCH-POUND

MIL-PRF-28776C
18 July 1994
SUPERSEDING
MIL-R-28776B
22 October 1982

PERFORMANCE SPECIFICATION

RELAYS, HYBRID, ESTABLISHED RELIABILITY,
GENERAL SPECIFICATION FOR

This specification is approved for use by all Departments and Agencies of the Department of Defense.

1. SCOPE

1.1 Scope. This specification establishes the general requirements for relays that use a combination of solid state circuit input elements functioning with an electro-mechanical relay that performs the switching functions associated with control system applications (see 6.1). These relays are designed to operate in low and medium power switching circuits with contact ratings up to 1 ampere alternating current (ac) or direct current (dc). The failure rate level is established at a confidence level of 90 percent for qualification and 60 percent for maintenance of qualification based on 100,000 cycles at +125°C under rated load conditions specified herein. Excludes time delay relays. CAUTION: The use of any coil voltage less than the rated coil voltage will compromise the operation of the relay. CAUTION: Pick-up, hold, and dropout voltages are for test purposes only and are not to be used as design criteria. For additional application and caution information, see 6.1.

1.2 Part or Identifying Number (PIN). The PIN shall consist of the letter "M", the basic number of the specification sheet, an assigned dash number (see 3.1), and a suffix letter designating failure rate level (see table I) as shown in the following example:

M	28776/1	-001	L
Military designator	Specification sheet number	Dash number	Failure rate level

1.3 Failure rate (FR) level designation. The failure rate level designation is shown in table I (see 4.6).

TABLE I Failure rate level designation.

Failure rate level designation	Failure rate level (percent per 10,000 cycles)
L	3.0
M	1.0
P	0.1
R	0.01

Beneficial comments (recommendations, additions, deletions) and any pertinent data which may be of use in improving this document should be addressed to: Commander, Defense Electronics Supply Center, ATTN: DESC-EIDM, 1507 Wilmington Pike, Dayton, OH 45444-5765, by using the Standardization Document Improvement Proposal (DD Form 1426) appearing at the end of this document or by letter.

AMSC N/A
DISTRIBUTION STATEMENT A: Approved for public release; distribution is unlimited.

Downloaded from http://www.everyspec.com

2. APPLICABLE DOCUMENTS

2.1 Government documents.

2.1.1 Specifications, standards, and handbooks. The following specifications, standards, and handbooks form a part of this document to the extent specified herein. Unless otherwise specified, the issues of these documents are those listed in the issue of the Department of Defense Index of Specifications and Standards (DODISS) and supplement thereto, cited in the solicitation (see 6.2).

SPECIFICATIONS

FEDERAL

J-W-1177 - Wire, Magnet, Electrical.
QQ-N-290 - Nickel Plating (Electrodeposited).
ZZ-R-765 - Rubber, Silicone: Low- and High-Temperature and Tear Resistant.

MILITARY

MIL-I-10 - Insulating Compound, Electrical, Ceramic, Class L.
MIL-M-14 - Molding Plastics and Molded Plastic Parts, Thermosetting.
MIL-P-116 - Preservation, Methods of.
MIL-P-997 - Plastic Material, Laminated, Thermosetting, Electrical Insulation: Sheets, Glass Cloth.
MIL-P-15037 - Plastic Sheet, Laminated, Thermosetting, Glass-Cloth, Melamine-Resin.
MIL-P-15047 - Plastic Sheets, Laminated Thermosetting, Sheet, Nylon Fabric Base, Phenolic-Resin.
MIL-G-45204 - Gold Plating, Electrodeposited.

STANDARDS

FEDERAL

FED-STD-123 - Marking for Shipment.

MILITARY

MIL-STD-129 - Marking for Shipment and Storage.
MIL-STD-202 - Test Methods for Electronic and Electrical Component Parts.
MIL-STD-454 - Standard General Requirements for Electronic Equipment.
MIL-STD-690 - Failure Rate Sampling Plans and Procedures.
MIL-STD-750 - Test Methods for Semiconductor Devices.
MIL-STD-790 - Product Assurance Program for Electronic Parts Specifications.
MIL-STD-883 - Test Methods and Procedures for Microelectronics.
MIL-STD-1276 - Leads for Electronic Parts.
MIL-STD-1285 - Marking of Electrical and Electronic Parts.
MIL-STD-1346 - Relays Selection and Application.
MIL-STD-1686 - Electrostatic Discharge Control Program for Protection of Electrical and Electronic Parts.
MIL-STD-2073-1 - DoD Materiel Procedures for the Development and Application of Packaging Requirements.

HANDBOOKS

MIL-HDBK-263 - Electrostatic Discharge Control Handbook for Protection of Electrical and Electronic Parts, Assemblies and Equipment.
MIL-HDBK-338 - Electronic Reliability Design Handbook.

(See supplement 1 for list of associated specifications.)

(Unless otherwise indicated, copies of the federal and military specifications, standards, and handbooks are available from the Defense Printing Service Detachment Office, Building 4D (Customer Service), 700 Robbins Avenue, Philadelphia, PA 19111-5094.)

Downloaded from http://www.everyspec.com

2.2 Non-Government publications. The following documents form a part of this document to the extent specified herein. Unless otherwise specified, the issues of the documents which are DoD adopted are those listed in the issue of the DODISS cited in the solicitation. Unless otherwise specified, the issues of documents not listed in the DODISS are the issues of the documents cited in the solicitation (see 6.2).

AMERICAN NATIONAL STANDARDS INSTITUTE (ANSI)

ANSI Y32.2 - Graphic Symbols for Electric and Electronic Diagrams.

(Application for copies should be addressed to the American National Standards Institute, 11 West 42nd Street, New York, NY 10036.)

ELECTRONIC INDUSTRIES ASSOCIATION (EIA)

EIA-557 - Statistical Process Control Systems.

(Application for copies should be addressed to the Electronic Industries Association, 2001 Pennsylvania Avenue, NW, Washington, DC 20006.)

(Non-Government standards and other publications are normally available from the organizations that prepare or distribute the documents. These documents also may be available in or through libraries or other informational services.)

2.3 Order of precedence. In the event of a conflict between the text of this document and the references cited herein (except for related detail specifications, specification sheets, or MS standards), the text of this document takes precedence. Nothing in this document, however, supersedes applicable laws and regulations unless a specific exemption has been obtained.

3. REQUIREMENTS

3.1 Specification sheets. The individual item requirements shall be as specified herein and in accordance with the applicable specification sheet. In the event of any conflict between requirements of this specification and the specification sheet, the latter shall govern.

3.2 Qualification. Relays furnished under this specification shall be products which are authorized by the qualifying activity for listing on the applicable qualified products list (QPL) at the time of award of contract (see 4.4 and 6.3). Authorized distributors which are approved to MIL-STD-790 distributor requirements by the QPL manufacturers are listed in the QPL.

3.3 Reliability and quality.

3.3.1 Reliability. Reliability of relays furnished under this specification shall be established and maintained in accordance with the requirements and procedures specified in MIL-STD-790 and MIL-STD-690 with details and exceptions specified in 4.1.2, 4.4.4, and 4.5.

3.3.2 Quality.

3.3.2.1 Statistical process control (SPC). The contractor shall implement and use statistical process control techniques in the manufacturing process for parts covered by this specification. The SPC program shall be developed and maintained in accordance with EIA-557. The SPC program shall be documented and maintained as part of the overall reliability assurance program as specified in MIL-STD-790. The implementation date for statistical process control shall be 12 months from the date of revision C of this specification.

3.4 Materials. Materials shall be as specified herein. However, when a definite material is not specified, a material shall be used which will enable the relays to meet the performance requirements of this specification. Materials used shall be self-extinguishing, and shall not support combustion, give off noxious gases in harmful quantities, give off gases in quantities sufficient to cause explosion of sealed enclosures, cause contamination of the contacts or other parts of the relay, or form current-carrying tracks when subjected to any of the tests specified herein. The selection of materials shall be such as to provide maximum shelf life. Acceptance or approval of any constituent materials shall not be construed as a guaranty of the acceptance of the finished product.

Downloaded from http://www.everyspec.com

3.4.1 Plastic. Laminated plastic material shall conform to MIL-P-997, MIL-P-15037, or MIL-P-15047. Molded plastic material shall conform to MIL-M-14. Cotton-filled or wood-flour-filled materials shall not be used.

3.4.2 Ceramic. Ceramic insulating material shall conform to MIL-I-10, grade L422 or higher. Ceramic used for external surfaces shall be glazed.

3.4.3 Fungus-resistant. Materials used in the construction of relays shall be fungus inert (see requirement 4 of MIL-STD-454).

3.4.4 Metals. Metals shall be of a corrosion-resistant type or shall be plated or treated to resist corrosion.

3.4.4.1 Plated finishes.

a. Use of tin plating is prohibited internally and externally (see 6.6.4.1). Use of tin-lead finishes are acceptable provided that the minimum lead content is 3 percent.

b. Use of zinc plating is prohibited internally and externally.

c. Use of cadmium plating is prohibited internally and externally.

3.4.4.2 Dissimilar metals. When dissimilar metals are used in intimate contact with each other, protection against electrolysis and corrosion shall be provided. The use of dissimilar metal in contact, which tends toward active electrolytic corrosion (particularly brass, copper, or steel used in contact with aluminum or aluminum alloy), is not acceptable. However, metal spraying or metal plating of dissimilar base metals to provide similar or suitable abutting surfaces is permitted. Dissimilar metals should be as defined in 6.6 through 6.6.4, inclusive. In hermetic seals, the 0.25 volt difference between the header material and the housing material is not applicable.

3.4.5 Magnet wire. Magnet-wire shall conform to J-W-1177. AWG wire sizes used in relays but not listed in J-W-1177 shall meet the basic material and coating requirements of J-W-1177 as a minimum.

3.4.6 Rubber. Rubber shall conform to ZZ-R-765.

3.4.7 Mercury. The use of mercury or mercury compounds is prohibited.

3.4.8 Magnesium. The use of magnesium or magnesium alloys is prohibited (not applicable to contacts).

3.4.9 Silicone or silicone compounds. The use of silicone (see 6.8) or silicone compounds for any purpose is prohibited.

3.5 Design and construction. Relays shall be of the design, construction, weight, and physical dimensions specified (see 3.1).

3.5.1 Case. Unless otherwise specified (see 3.1), the case shall not be electrically connected to the contacts or coil; however, it may be used as part of the magnetic circuit.

3.5.1.1 Case grounding. When specified (see 3.1), means for connecting the relay case to ground shall be provided.

3.5.2 Sealing process. Relays shall be dried, degassed, and backfilled with an atmosphere and sealed by welding such that the requirements of this specification are met. Adjunct sealant (see 6.8), if used, must comply with the following characteristics:

a. Shall not extend above 20 percent of the length of the exposed terminals above the glass meniscus.

b. Trace color is permitted if it is a natural result of the sealant process.

c. Shall form, after curing, a permanent nonconductive, noncracking seal under all relay environments.

3.5.3 Contacts. Contacts shall have load ratings and arrangements (see MIL-STD-1285) as specified (see 3.1) and unless otherwise specified (see 3.1), shall be capable of carrying the maximum rated current continuously as well as making and breaking the specified current under all environmental conditions specified herein

Downloaded from http://www.everyspec.com

3.5.4 Coils. Coils shall be adequately insulated electrically from the contacts and the case. The resistance and rated voltage (or current) shall be as specified (see 3.1). Coils shall be designed for continuous operation at maximum rated voltage and temperature, unless otherwise specified (see 3.1).

3.5.4.1 Terminal identification. When specified (see 3.1), a bead of contrasting color shall be used to designate the X1 (positive, if applicable) terminal (see figure 1 and MIL-STD-1285).

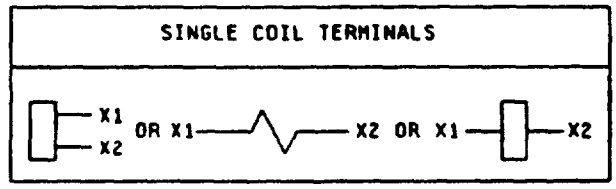

FIGURE 1. Symbols and marking for terminals.

3.5.5 Circuit diagram. The circuit diagram, as specified (see 3.1), shall be a terminal view. Circuit symbols shall be in accordance with ANSI Y32.2. For relays without an orientation tab, the circuit diagram, as specified (see 3.1), shall be orientated so that when the relay is held with the circuit diagram right side up as shown (see 3.1), and rotated away from the viewer about a horizontal axis through the diagram until the header terminals face the viewer, then each terminal shall be in the location shown in the circuit diagram.

3.5.6 Mounting means (see 3.1).

3.5.6.1 Bracket. Mounting brackets shall be an integral part of the relay, securely attached thereto in a manner to prevent any movement between the relay and the mounting bracket.

3.5.7 Terminals (see 3.1). Terminals shall be as specified herein. Manufacturer may supply hot solder dipped terminals provided that the hot solder dipping process has been approved by the qualifying activity and when specified on the individual purchase order (see 6.2.1a). Solder dipped terminals may be .002 inch (0.050 mm) larger than the maximum dimension specified (see 3.1).

3.5.7.1 Solder-lug terminals. Solder-lug terminals shall be designed to accommodate two conductors, each rated to carry the maximum rated current of the contact or coil terminated.

3.5.7.2 Wire leads. Wire leads shall be as specified (see 3.1). Optional, shortened wire leads may be supplied when specified on the individual purchase order (see 3.1 and 6.2.1b).

3.5.7.2.1 Wire leads, solder pin (SP). Solder pin wire leads shall be as specified (see 3.1).

3.5.7.3 Plug-in termination. Plug-in terminations shall conform to the arrangements or dimensions as specified (see 3.1). The mounting arrangement of the relay shall be so designed that the entire weight of the relay will be suspended and the stability of its mounting will be provided by an auxiliary mounting means other than the electrical terminals of a socket (see 3.1). Plug-in terminals shall be gold plated in accordance with MIL-G-45204, type II, class I, with a nickel underplating that shall be in accordance with QQ-N-290 and 50 to 150 microinches thick.

3.5.7.4 Solder dip (retinning) leads. The manufacturer may solder dip/retin the leads of product supplied to this specification provided the solder dip process has been approved by the qualifying activity.

3.5.7.4 1 Qualifying activity approval. Approval of the solder dip process will be based on one of the following options (Note: Solder dip of gold-plated plug-in leads is not allowed.) All visual examination criteria shall be in accordance with method 208 of MIL-STD-202:

a. When the original lead finish qualified was hot solder dip lead finish 52 of MIL-STD-1276 (The 200-microinch thickness is not applicable). The manufacturer shall use the same solder dip process for retinning as is used in the original manufacture of the product.

Downloaded from http://www.everyspec.com

b. When the lead originally qualified was not hot solder dip lead finish 52 as prescribed above, approval for the process to be used for solder dip shall be based on the following test procedure:

(1) Six samples for each style and lead finish are subjected to the manufacturer's solder dip process. Following the solder dip process, the relays shall be subjected to groups A2 and A4.

(2) Three of the six samples are then subjected to the solderability test (see 3.8). No visual defects are allowed.

(3) Remaining three samples are subjected to the resistance to solder heat test (see 3.20).

(4) All six samples shall be subjected to groups A2 and A4 inspections. Minor scratching of the terminals due to insertion into test sockets shall not be cause for rejection.

3.5.7.4.2 Solder dip/ retinning options. The manufacturer may solder dip/retin as follows:

a. After the 100 percent group A1 screening tests and before the group A3 solderability test. Following the solder dip/retinning process, insulation resistance (all terminals to case), seal, and visual/mechanical inspection shall be performed.

b. As a corrective action, if the lot fails the group A solderability test, insulation resistance (all terminals to case), seal, and visual/mechanical inspection shall be performed..

c. For relays that have been subjected to and passed group A inspection. Following the solder dip/retinning process, insulation resistance (all terminals to case),.seal, and visual/mechanical inspection shall be performed.

3.5.8 Diodes. Relays supplied with diodes installed internally are not considered ESD sensitive. However, the diode may be ESD sensitive when not part of the coil circuit or wired internal to the coil. In such case, the diode shall be processed in accordance with the requirements specified in 4.1.4. Manufacturers may, at their option, test diodes used internally as specified in method 3015 of MIL-STD-883 modified to 16,000 volts to eliminate the need for the ESDS protection program described above.

3.6 In-process inspection (see 4.7.1).

3.6.1 Solid state devices and diode in-process screening (see 4.7.1.1). Perform in-process screening as specified in 4.7.1.1.

3.7 Screening (see 4.8.2). The contact miss detectors monitoring level shall be less than 100 ohms for relays tested during cycling. Unless otherwise specified (see 3.1), any relay shall have a final insulation resistance measurement of 10,000 megohms or greater.

3.8 Solderability (see 4.8.3). The critical (examination) area of solid wire lead and pin terminals shall be at least 95 percent covered with a continuous new solder coating per method 208 of MIL-STD-202. For solder-lug terminals greater than .045 inch (1.14 mm) in diameter, 95 percent of the total length of fillet, which is between the standard wrap wire and the terminal, shall be tangent to the surface of the terminal being tested, and shall be free of pinholes, voids, etc. A ragged or interrupted line at the point of tangency between the fillet and the terminal under test shall be considered a failure.

3.9 Seal (see 4.8.4). There shall be no leakage in excess of 1×10^{-8} atmospheric cubic centimeters per second of air (atm cm3/s).

3.10 Insulation resistance (see 4.8.5). The insulation resistance shall be 10,000 megohms or more, unless otherwise specified (see 3.1). After the high level life tests, the insulation resistance shall be 1,000 megohms or more.

3.11 Dielectric withstanding voltage (see 4.8 6). There shall be no leakage current in excess of 100 microamperes (μA). After high level life tests, the dielectric withstanding voltage measured at atmospheric or reduced barometric pressure shall be at least 75 percent of the initial value (3.1).

3.12 Electrical characteristics (see 4.8.7). The following tests as specified in 3.12.1 through 3.12.8 shall comprise the electrical characteristics tests Unless otherwise specified, electrical characteristics shall be 100 percent inspected and performed in the order as shown below.

Downloaded from http://www.everyspec.com

3.12.1 Static contact resistance (see 4.8.7.1). Unless otherwise specified (see 3.1), the static contact resistance shall not exceed 0.05 ohm.

3.12.2 Pickup, hold, and dropout voltages, control signal on (see 4.8.7.2). The pickup, hold, and dropout values (voltages) shall be as specified (see 3.1).

3.12.3 Coil current and coil resistance (see 4.8.7.3).

3.12.3.1 Coil current (see 4.8.7.3.1). The coil current shall be as specified (see 3.1).

3.12.3.2 Coil resistance (see 4.8.7.3.2). Coil resistance of hybrid relays is not directly measurable at the relay terminal due to resistance of drivers.

3.12.4 Turn-on (voltage or current) (coil supply voltage on) (see 4.8.7.4). 1/ The turn-on voltage shall be as specified (see 3.1).

3.12.5 Turn-off voltage (coil supply voltage on) (see 4.8.7.5). The turn-off voltage shall be as specified (see 3.1).

3.12.6 Turn-on time and turn-off time (see 4.8.7.6). The turn-on time and turn-off time shall be as specified (see 3.1). In multipole relays, during each of the turn-on and the turn-off time measurements, the difference between the first moving contact to make and the last moving contact to make shall not exceed 1 millisecond (ms).

3.12.6.1 Break before make (see 4.8.7.6.1). Moving contacts within a multipole relay shall show no evidence of any open contact closing before all closed contacts have opened (see 3.1). This applies to either state of the relay.

3.12.7 Contact dynamic characteristics (see 4.8.7.7).

3.12.7.1 Contact bounce (applicable to failure rate level "L") (see 4.8.7.7.1). The duration of the contact bounce shall not exceed 1.5 ms unless otherwise specified (see 3.1).

3.12.7.2 Contact stabilization time (applicable to failure rate levels "M", "P", and "R") (see 4.8.7.7.2). The time to reach and maintain a static contact resistance state shall not exceed 2.0 ms unless otherwise specified (see 3.1).

3.12.8 Coil transient suppression (applicable to dc operated relays with internal coil transient suppression) (see 4.8.7.8). Coils of dc operated relays shall not generate a back EMF greater than that specified (see 3.1), as maximum induced transient voltage.

3.13 Thermal shock (see 4.8.8). Insulation resistance, turn-on and turn-off voltages or currents, and turn-on and turn-off times shall meet the requirements of 3.10, 3.12.4, and 3.12.6, respectively, at each temperature extreme. Following the temperature excursions, there shall be no cracking, peeling, or flaking of the finish; dielectric withstanding voltage shall meet the requirements of 3.11.

3.14 Shock (specified pulse) (see 4.8.9). Unless otherwise specified (see 3.1), there shall be no opening of closed contacts in excess of 10 microseconds (μs) and there shall be no closure or bridging of open contacts in excess of 1 μs and no evidence of mechanical or electrical damage.

3.15 Vibration (see 4.8.10). Unless otherwise specified (see 3.1), there shall be no opening of closed contacts in excess of 10 μs and there shall be no closure or bridging of open contacts in excess of 1 μs and no evidence of mechanical or electrical damage.

3.16 Acceleration (unless otherwise specified, see 3.1) (see 4.8.11). The contacts of the relay shall remain in the de-energized position with no control signal applied and in the energized position when control signal is applied.

1/ Wherever "voltage" is used herein, it is considered to include "current" if applicable.

Downloaded from http://www.everyspec.com

3.17 Terminal strength (see 4.8.12). There shall be no evidence of loosening or breaking of the terminals, nor shall there be any other damage which would adversely affect the normal operation of the relay. Bending of terminals shall not be construed as damage. The glass criteria of 3.30 does not apply here.

3.18 Magnetic interference (when specified, see 3.1) (see 4.8.13). The pickup, hold, dropout, and turn-on and turn-off values (voltages) shall meet the requirements specified in 3.12.2, 3.12.4, and 3.12.5.

3.19 Coil life (see 4.8.14). There shall be no evidence of damage.

3.19.1 Coil endurance (see 4.8.14.1). The coil resistance shall be as specified (see 3.1).

3.20 Resistance to soldering heat (see 4.8.15). There shall be no damage which would adversely affect normal operation of the relay.

3.21 Salt spray or atmosphere (corrosion) (see 4.8.16). There shall be no evidence of breaking, cracking, chipping, or flaking of the finish, nor exposure of the base metal, due to corrosion, which would adversely affect the application or performance characteristics of the relay.

3.22 Overload (applicable to high level relays only) (see 4.8.17). The voltage drop across closed contacts shall be less than or equal to 5 percent of the applied load voltage and the voltage across open contacts shall be 95 percent or more of the applied load voltage. The case-to-ground fuse shall remain electrically continuous.

3.23 Life (see 4.8.18). For low level testing, the contact miss detector's monitoring level shall be less than or equal to 100 ohms (unless otherwise specified, see 3.1). For high level testing, the contact miss detector's monitoring level shall be less than or equal to 5 percent of the applied load voltage and the voltage across open contacts shall be 95 percent or more of the applied load voltage. Unless otherwise specified, the static contact resistance following cycling shall be no greater than twice the initial specified contact resistance requirement. There shall be no mechanical or electrical failure. Welding of contacts, failure to make, carry or break the load, or failure of the fuse connected between case and load system ground or neutral shall constitute a failure. Relays indicating failure, not verified per a failures verification procedure approved by the qualifying activity, may be returned to test. During post life tests, failure of a diode, transistor, or FET coil driver shall constitute a failure.

3.24 Intermediate current (see 4.8.19). During cycling, unless otherwise specified (see 3.1), the resistance of a closed contact shall be less than or equal to 3 ohms and the voltage across an open contact shall be 95 percent or more of applied load voltage. After cycling, the static contact resistance shall be measured at room ambient (+25°C) and shall not exceed the limits as specified (see 3.1). Intermediate current shall not be considered a low level or high level contact load rating (see 6.1.1). There shall be no mechanical or electrical failure. Welding of contacts, failure to make, carry or break the load, or failure of the fuse connected between case and load system ground or neutral shall constitute a failure. Relays indicating failure, not verified per a failures verification procedure approved by the qualifying activity, may be returned to test. During post life tests, failure of a diode, transistor, or FET coil driver shall constitute a failure.

3.25 Mechanical life (see 4.8.20). After cycling, the insulation resistance and dielectric withstanding voltage shall not exceed the limits as specified (see 3.1) and the turn-on and turn-off time shall not exceed 120 percent of the limits specified (see 3.1). There shall be no mechanical or electrical failure. Welding of contacts, failure to make, carry or break the load, or failure of the fuse connected between case and load system ground or neutral shall constitute a failure. Relays indicating failure, not verified per a failures verification procedure approved by the qualifying activity, may be returned to test. During post life tests, failure of a diode, transistor, or FET coil driver shall constitute a failure.

3.26 Resistance to solvents (see 4.8.21). The marking shall remain legible.

3.27 Voltage transients (4.8.22). There shall be no opening of closed contacts in excess of 10 μs nor closing of open contacts in excess of 10 μs.

Downloaded from http://www.everyspec.com

3.28 Marking.

3.28.1 "JAN" brand. The United States Government has adopted, and is exercising legitimate control over the certification marks "JAN" and "J", respectively, to indicate that items so marked or identified are manufactured to, and meet all the requirements of military specifications. Accordingly, items acquired to, and meeting all of the criteria specified herein and in applicable specifications shall bear the certification mark "JAN" except that items too small to bear the certification mark "JAN" shall bear the letter "J". The "JAN" or "J" shall be placed on the first line above or below the "M" of the military part number or the "J" with the date code (example J8530). Items furnished under contracts or orders which either permit or require deviation from the conditions or requirements specified herein or in applicable specifications shall not bear "JAN" or "J". In the event an item fails to meet the requirements of this specification and the applicable specification sheets or associated detail specifications, the manufacturer shall remove the "JAN" or the "J" from the sample tested and also from all items represented by the sample. The "JAN" or "J" certification mark shall not be used on products acquired to contractor drawings or specifications. The United States Government has obtained Certificate of Registration No. 504,860 for the certification mark "JAN".

3.28.2 Identification marking (full). Relays shall be marked in accordance with method I of MIL-STD-1285 and shall include the following information:

a. Military PIN (see 1.2 and 3.1). The "JAN" or "J" shall not be marked in front of the PIN.

b. "JAN" or "J" brand. The "JAN" or "J" shall appear directly above or below the "M" of the military PIN (examples: JAN M28776/6-001L)
M28776/6-001L or J

c. Date code (at the option of the manufacturer, the "J" with the date code may be used instead of b). The date code shall provide traceability (see 4.1.2.1).

d. Source code.

e. Lot symbol (optional).

f. Rated coil voltage (or current) (see 3.1) and when applicable, operating frequency.

g. Coil current.

h. Contact rating (the highest dc resistive load rating shall be marked) (see 3.1).

i. Circuit diagram (see 3.5.5).

j. Terminal marking (when applicable, see 3.1, 3.5.4.1, and 3.5.7).

3.28.3 Minimum marking (when specified, see 3.1). When space does not permit the marking specified in 3.28.2, the marking shall include, as a minimum the military PIN; the "J" with the date code (example J8230); circuit diagram; and manufacturer's name or source code.

3.28.4 Failure rate level substitution. With procuring activity approval, relays qualified to lower (better) failure rates, may be substituted for higher failure rate parts. For example, a relay qualified to failure rate level "P" (0.1 percent/10,000 cycles), may be substituted for a failure rate "M" (1.0 percent/10,000 cycles), relay. Relays shall not be remarked unless specified in the contract or purchase order.

3.28.5 Interchangeability. All parts having the same military PIN shall be directly and completely interchangeable with each other with respect to installation and performance to the extent specified in the military specification sheet (see 3.1).

3.29 Workmanship. The relays shall be fabricated in such a manner as to be uniform in quality, and shall be free from cracked or displaced parts, sharp edges, burrs, and other defects that will affect life, serviceability, and appearance.

Downloaded from http://www.everyspec.com

3.30 Header glass. Header glass may have small irregularities, such as bubbles, chips, and cracks. The acceptability shall be based on figure 2 and the following:

a. Surface blisters whose diameters do not exceed one-half of the radial distance between the terminal and the corresponding header metal (for a cluster of blisters, the overall cluster diameter shall apply) are acceptable.

b. Circumferential cracks which originate and terminate in the glass and which extend less than 135° are acceptable (see figure 2, reference B).

c. Radial cracks with lengths not exceeding three-quarters of the distance between the terminal and the surrounding header metal are acceptable (see figure 2, reference C).

d. Tangential cracks which are confined to a single zone are acceptable (see figure 2, reference D).

e. Meniscus cracks, and chipouts, which completely surround the terminal are acceptable if:

(1) The meniscus cracks, and chipouts do not extend beyond one-half the distance from the terminal to the surrounding header metal, or

(2) The meniscus cracks, and chipouts do not extend beyond one-quarter of the distance from the terminal to the surrounding header metal and a portion of the meniscus cracks, and chipouts does not extend beyond three-quarters of the distance from the terminal to the surrounding header metal if that portion of the meniscus cracks, and chipouts does not span more the 180° (see figure 2, reference E).

f. An internal bubble whose diameter does not exceed one-third the distance between the terminal and the surrounding header metal is acceptable.

Microscopic examination with up to 10X magnification shall be used. In case of dispute, all relays shall meet the applicable insulation resistance, dielectric withstanding voltage, and seal requirements, regardless of the acceptability of the header glass.

The above requirements are not applicable after group B and group C inspections and also not applicable to relays with spacer pads after forming the leads.

Downloaded from http://www.everyspec.com

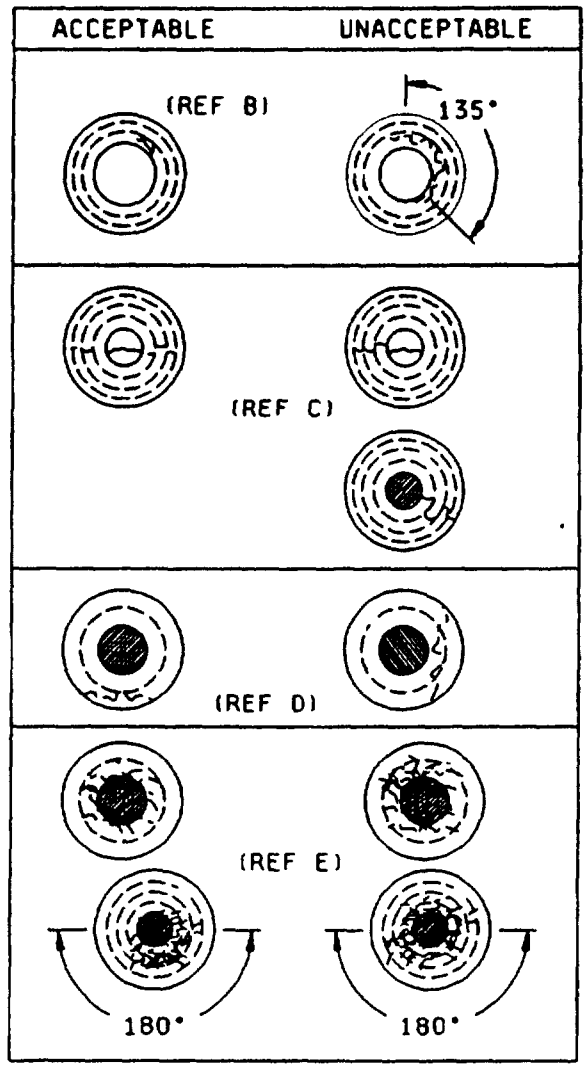

NOTE: The broken lines indicate the division of the radial distance between the terminal and the surrounding header metal into equal parts, thus creating concentric zones around the terminal.

FIGURE 2 Inspection aid

Downloaded from http://www.everyspec.com

4. QUALITY ASSURANCE PROVISIONS

4.1 Responsibility for inspection. Unless otherwise specified in the contract or purchase order, the contractor is responsible for the performance of all inspection requirements (examinations and tests) as specified herein. Except as otherwise specified in the contract or purchase order, the contractor may use his own or any other facilities suitable for the performance of the inspection requirements herein, unless disapproved by the Government. The Government reserves the right to perform any of the inspections set forth in this specification where such inspections are deemed necessary to ensure supplies and service conform to prescribed requirements.

4.1.1 Responsibility for compliance. All items shall meet all requirements of sections 3 and 5. The inspection set forth in this specification shall become a part of the contractor's overall inspection system or quality program. The absence of any inspection requirements in the specification shall not relieve the contractor of the responsibility of ensuring that all products or supplies submitted to the Government for acceptance comply with all requirements of the contract. Sampling inspection, as part of manufacturing operations, is an acceptable practice to ascertain conformance to requirements, however, this does not authorize submission of known defective material, either indicated or actual, nor does it commit the Government to accept defective material.

4.1.2 Product assurance program. A product assurance program shall be established and maintained in accordance with MIL-STD-790. Evidence of such compliance shall be verified by the qualifying activity of this specification as a prerequisite for qualification and continued qualification.

4.1.2.1 Traceability requirements. The manufacturer shall submit to the qualifying activity the procedure whereby the lot date codes are assigned that incorporates traceability. The following is a list of raw material/component parts and subassembly traceability requirements:

a. Header-contact subassembly with the lot number.

(1) Stationary or moving contact (a contact may consist of an individual wire or a contact blade and contact button).

(2) Header with glass to metal sealed leads in place with the lot number.

(3) Return spring(s).

(4) Diodes, transistors, and FETs (as applicable) with the lot number.

b. Motor subassembly with the lot number.

(1) Wound coils with the lot number.

(2) Armature assembly.

(3) Diodes, transistors, and FETs (as applicable) with the lot number.

4.1.3 Statistical process control (SPC). A SPC program shall be established and maintained in accordance with EIA-557. Evidence of such compliance shall be verified by the qualifying activity as a prerequisite for qualification and retention of qualification.

4.1.4 ESD protection program. This requirement is applicable to all manufacturers who handle ESDS component parts and/or materials in the relay manufacturing and /or testing process. The manufacturer shall establish and maintain an ESD control program in accordance with MIL-STD-1686 and MIL-HDBK-263. Evidence of such compliance shall be verified by the qualifying activity of this specification as a prerequisite for qualification and continued qualification. This program shall be documented by an ESD control plan which must be under document control. As a minimum, this plan must address the identification of ESDS sub-components and end items, facilities, training, design protection, handling procedures, marking, cleaning, preservation, packaging, and quality assurance. A model ESD control program is available from the qualifying activity and may be used as a guideline document. Further guidance for ESD control is available from the EOS/ESD Association and the Electronics Industry Association (EIA).

Downloaded from http://www.everyspec.com

4.2 Classification of inspection. The inspections specified herein are classified as follows:

a. Qualification inspection (see 4.4).

b. Verification of qualification (see 4.5).

c. In-process and quality conformance inspection (see 4.7).

4.2.1 Records retention. Documentation for test and production shall be retained as a minimum as defined below:

a. Qualification test reports, data, and samples shall be retained as long as qualification is maintained.

b. Group A test data and production traveler: 3 years from the final inspection or date code.

c. Group B and C test reports and data: 5 years from date of submission. Test samples shall be retained until a letter of acceptance has been received from the qualifying activity or for one reporting period, whichever is longer.

4.3 Inspection conditions. Unless otherwise specified herein, the test conditions specified in the "GENERAL REQUIREMENTS" of MIL-STD-202 shall be considered for referee purposes only. All inspections may be performed at ambient conditions consistent with industry practice.

4.3.1 Power supply. Unless otherwise specified herein, the power supply shall have no more than 10 percent regulation at 110 percent of the specified test load current. A dc power supply shall have no more than 5 percent ripple voltage. An ac power supply shall be within 1 percent of the specified frequency and shall be sinusoidal with a form factor between 0.95 and 1.25.

4.3.2 Grounding. Unless otherwise specified (see 3.1), the negative side of the dc power supply shall be grounded. One side of single-phase ac power supply shall be grounded.

4.3.3 Load conditions during tests. The coil of the relay being tested shall be connected to a power supply separate from the load power supply. The loads of the relay being tested shall be connected individually to each stationary contact. The polarity of the load power supply is optional. The movable contacts of the relay being tested may be connected to either the high or low side of the load power supply. All tests during which the contacts are loaded and being cycled, except dielectric withstanding voltage, shall be conducted with the case of the relay connected to the power supply ground or neutral through a normal blow fuse rated at 5 percent of the contact load maximum, but not less than 0.100 ampere. For relays with nongrounded case ratings, tests for isolated-case ratings may be made with the case electrically isolated from the power supply ground.

4.3.4 Input conditions during test. Unless otherwise specified, the relay is turned on when rated coil supply voltage and control signal voltage is applied. The relay is turned off when rated coil supply voltage is applied but the control signal voltage is turned off.

4.3.5 Testing devices. Devices used in the testing of relays shall not load the contacts above 10 mA resistive at 6 V dc or peak ac maximum open circuit unless otherwise specified herein.

4.3.6 Mounting relays for ambient temperature tests. When the relays are subjected to the tests specified in 4.8.19 and 4.8.14 (intermediate current and coil life, respectively), they may be mounted on a heat sink in accordance with the following:

a. Each relay may be attached by its normal mounting means to a .062 inch (1.57 mm) thick minimum, flat aluminum plate heat sink. The heat sink shall be designed to place every relay in the center of its own square space whose total surface area (both sides) is eight times the outside surface area of the relay, excluding mounting. Relays without mounts shall be held to the heat sink with a metal strap .25 inch (6.35 mm) wide by .015 inch (0.38 mm) maximum thickness The heat sink assembly shall be suspended by twine or other nonheat conducting material. The leads shall not constitute a heat sink.

b Chamber temperature shall be controlled to maintain the temperature at the specified ambient extremes (see 3.1).

Downloaded from http://www.everyspec.com

4.3.7 Methods of examination and test. Application of coil power to relays under test shall be such that plus polarity is applied to the color coded terminal when applicable; or to the lower numbered terminal when color coding is not used.

4.3.8 Reliability requirements. The reliability requirements specified herein are in accordance with MIL-STD-690. The confidence level for qualification is 90 percent and the confidence level for maintenance of qualification is 60 percent.

4.3.9 Tolerances. Unless otherwise specified (see 3.1), all electrical, environmental, and mechanical parameters shall have a tolerance of ±10 percent.

4.3.10 Alternate test equipment. Test circuits and test equipment herein are intended to provide guidance to the relay manufacturer. Use of any alternate test circuits and/or test equipment shall be approved by the qualifying activity prior to use.

4.4 Qualification inspection. Qualification inspection shall be performed at a laboratory acceptable to the Government (see 6.3) on sample units produced with equipment and procedures normally used in production.

4.4.1 Qualification. Qualification shall be granted at the "L" or "M" failure rate initially and shall be based on results of the qualification inspection specified in table II. A certification of construction to the materials requirements of 3.4, and the design and construction requirements of 3.5 shall accompany the submission of qualification inspection results to the qualifying activity.

4.4.1.1 Sampling plan. The number of relays to be subjected to qualification inspection shall be as specified in table II. The sample shall be selected from a production run and shall be produced with equipment or procedures normally used in production. The qualification sample shall be as defined in table II.

4.4.2 Inspection routine. Sample units shall be subjected to the qualification inspection outlined in table II, in the order shown, except that groups Q2 through Q7 may be conducted concurrently. All sample units shall be subjected to the tests in Q1. These sample units shall then be divided into six groups as specified in table II and subjected to the inspection specified for their particular group.

4.4.3 Failures. Failures in excess of those allowed in table II shall be cause for refusal to grant qualification approval.

4.4.4 Failure-rate level and quality level verification.

4.4.4.1 FR qualification. FR qualification shall be in accordance with the general and detailed requirements of MIL-STD-690, MIL-STD-790 in its entirety, and the following details:

a. Procedure I - Qualification at the initial FR level. The manufacturer may qualify his products to failure rate levels "L" or "M" initially.

b. Procedure II - Extension of qualification to lower FR levels. To extend qualification to a lower FR level (see table III), data from two or more styles of similar construction may be combined.

c. Procedure III - Maintenance of FR level qualifications. Maintenance period of table IV shall apply Regardless of the number of production lots produced during this period, the specified number of life test unit operations shall be accumulated to maintain qualification. If there is no production, see 4.5. The manufacturer shall preselect the sampling plan to be used during the maintenance period from table IV. In the event that failures occur exceeding the sampling plan selected (C = number), the failure rate of the product shall be increased one level or the product removed from the Qualified Products List. Noncompliance corrective action shall be in accordance with 4.7.3.3.

Downloaded from http://www.everyspec.com

TABLE II. Qualification inspection.

Inspection	Requirement paragraph	Test method paragraph	Number of sample units to be inspected	Number of failures allowed
Q1				
Visual and mechanical inspection (internal) 1/	3.1 and 3.29	4.8.1		
Screening	3.7	4.8.2		
Solderability (3 sample units) 2/	3.8	4.8.3	All sample units	0
Dielectric withstanding voltage 3/	3.11	4.8.6		
Insulation resistance 3/	3.10	4.8.5		
Electrical characteristics 3/	3.12	4.8.7		
Visual and mechanical inspection (external) (dimensional check on 2 sample units only)	3.1, 3.28, 3.29, 3.30	4.8.1		
Seal	3.9	4.8.4		
Q2				
Voltage transients	3.27	4.8.22		
Thermal shock	3.13	4.8.8		
Resistance to solvents	3.26	4.8.21		
Shock (specified pulse)	3.14	4.8.9		
Vibration (sinusoidal)	3.15	4.8.10.1	4	1
Vibration (random)	3.15	4.8.10.2		
Acceleration	3.16	4.8.11		
Terminal strength	3.17	4.8.12		
Dielectric withstanding voltage 3/	3.11	4.8.6		
Insulation resistance 3/	3.10	4.8.5		
Electrical characteristics 3/	3.12	4.8.7		
Seal	3.9	4.8.4		
Q3				
Magnetic interference (when specified)	3.18	4.8.13		
Coil life	3.19	4.8.14		
Resistance to soldering heat	3.20	4.8.15		
Salt atmosphere (corrosion)	3.21	4.8.16	4	1
Dielectric withstanding voltage 3/	3.11	4.8.6		
Insulation resistance 3/	3.10	4.8.5		
Electrical characteristics 3/	3.12	4.8.7		
Seal	3 9	4.8.4		

See footnotes at end of table.

Downloaded from http://www.everyspec.com

TABLE II. Qualification inspection - Continued.

Inspection	Requirement paragraph	Test method paragraph	Number of sample units to be inspected	Number of failures allowed
Q4				
Overload (highest dc resistive load)	3.22	4.8.17		
Life (highest rated dc, 50,000 cycles) 4/	3.23	4.8.18		
Dielectric withstanding voltage 3/	3.11	4.8.6	4	1
Insulation resistance 3/	3.10	4.8.5		
Electrical characteristics 3/	3.12	4.8.7		
Q5				
Life 5/	3.23	4.8.18	For qualification to level L 8 - - - - 0 14 - - - - 1 23 - - - - 2 40 - - - - 5 For qualification to level M 23 - - - - 0 39 - - - - 1	
Dielectric withstanding voltage 3/	3.11	4.8.6		
Insulation resistance 3/	3.10	4.8.5		
Electrical characteristics 3/	3.12	4.8.7		
Q6				
Intermediate current	3.24	4.8.19		
Dielectric withstanding voltage 3/	3.11	4.8.6		
Insulation resistance 3/	3.10	4.8.5	4	1
Electrical characteristics 3/	3.12	4.8.7		
Q7				
Mechanical life	3.25	4.8.20		
Dielectric withstanding voltage	3.11	4.8.7		
Insulation resistance	3.10	4.8.6	4	1
Turn-on time and turn-off time	3.12.6	4.8.7.6		
Visual inspection (external)	3.1, 3.28, 3.29	4.8.1		

1/ One sample unit remaining unsealed shall be subjected to the internal inspection.

2/ Solderability samples are not subjected to dielectric withstanding voltage, insulation resistance, electrical characteristics, and seal.

3/ Coil current may be done prior to dielectric withstanding voltage and insulation resistance. Testing sequence is optional for insulation resistance and dielectric withstanding voltage prior to electrical characteristics. Turn-on voltage (or current), see 3.1, and turn-off voltage may be done after coil transient suppression voltage.

4/ Post overload life testing requirements are not applicable to TO-5 and 0.100 grid pin style relays.

5/ The sample size shall be equally divided among the specified contact ratings and shall be of sufficient size to test a minimum of one relay per contact rating with rated loads on all contacts. When there are more samples than loads, the remaining loads shall be assigned in sequence beginning with the highest dc rated load.

Downloaded from http://www.everyspec.com

4.5 Verification of qualification. At all failure rate levels and maintenance periods specified in table IV, the manufacturer shall compile a summary of the results of quality conformance inspections and (where applicable) extended FR test data, in the form of a verification of qualification report, and forward it to the qualifying activity as the basis of continued qualification approval at 6-month intervals. In addition to the periodic submission of FR test data, the manufacturer shall immediately notify the qualifying activity whenever the FR data indicates that the manufacturer has failed to maintain his qualified FR level. Continuation shall be based on evidence that, over the 6-month period, the following has been met.

a. Verification by the qualifying activity that the manufacturer meets the requirements of MIL-STD-790.

b. The manufacturer has not modified the design of the item.

c. The specification requirements for the item have not been amended so as to affect the character of the item.

d. Lot rejection for group A inspection does not exceed 10 percent or one lot, whichever is greater.

e. Requirements for groups B and C are met (where applicable).

f. The records of all FR tests combined substantiate that the "L" (3.0 percent), "M" (1.0 percent), or "P" (0.1 percent) FR levels have been maintained or that the manufacturer continues to meet the "R" (0.01 percent) FR level for which qualified, although the total component cycles of testing do not, as yet, meet the requirements of 4.4.4 (see table IV).

If group C test requirements were not met and the manufacturer has taken corrective action satisfactory to the Government, the forwarding of the verification of qualification report may be delayed until within 60 days after completion of retesting of the group C inspections. In this case, the qualifying activity shall be notified of this condition within the time the original verification of qualification report was due. All reports shall be certified by a responsible company official and the Government inspector. In the event that no production occurred during a 6-month reporting period, the manufacturer shall submit a DD Form 1718, Certification of Qualified Product, to the qualifying activity certifying that the company still has the capabilities and facilities necessary to produce the relay. If during two consecutive reporting periods there has been no production, the manufacturer may be required, at the discretion of the qualifying activity, to produce test samples to perform all group B and C tests.

4.6 FR level determination. Determination of FR levels shall be based upon data from all completed life tests. Data for determination of FR levels shall be accumulated in the following manner:

a. The qualification test samples.

b. Test on every production lot which has been submitted for group B quality conformance inspection.

c. Test results of relays which have a similar internal design and construction, same production processes, same or higher environmental capability, and same electrical characteristics as the qualified relay and which have been tested in accordance with the group B quality conformance inspection conditions. These relay types must be reviewed and approved by the qualifying activity prior to being considered as acceptable relays for use in obtaining FR data.

4.6.1 Records. Test records shall be maintained which shall include the data derived from the sources specified in 4.6. The example forms shown in MIL-STD-690 include the minimum information required and a suggested format for this report. Test data on every production lot has been submitted for quality conformance inspection shall be included.

4.6.2 FR level computation. Data from test records shall be used to compute the observed failure rates of the sample units using a maintenance of FR record form similar to examples of FR test records (figure 1) of MIL-STD-690. For this computation, a sample unit which fails at any given cycle shall be classed as a failure for all subsequent measurements. However, the contractor, at his option, may physically remove failed sample units from the test. If a failed sample unit is not removed, the cycles accumulated subsequent to its failure shall not be counted toward the cumulative component cycles shown on record form.

4.6.2.1 Contact FR computation. The data from tests shall be recorded in such a manner so that, if necessary, it can be analyzed to compute contact FR.

Downloaded from http://www.everyspec.com

TABLE III. Requirements for extension of qualification to lower (better) failure rate levels (90 percent confidence level).

FR level symbol	Qualified FR (%/10,000 cycles)	Cumulative unit cycles in millions					
		C 1/ = 0	C = 1	C = 2	C = 3	C = 4	C = 5
M	1.0	2.30	3.89	5.32	6.68	7.99	9.27
P	0.1	23.0	38.9	53.2	66.8	79.9	92.7
R	0.01	230	389	532	668	799	927

1/ C = Acceptance number or number of failures permitted. C numbers greater than five shall be coordinated and approved by the qualifying activity.

TABLE IV. Sampling plan for maintenance of FR level qualification (60 percent confidence level).

FR level symbol	Qualified FR (%/10,000 cycles)	Maximum qualification maintenance period	Cumulative unit cycles in millions				
			C 1/ = 1	C = 2	C = 3	C = 4	C = 5
L	3.0	6 months	.673	1.03	1.39	1.75	2.10
M	1.0	6 months	2.02	3.10	4.18	5.25	6.30
P	0.1	12 months	20.2	31.0	41.8	52.5	63.0
R	0.01	24 months	202	310	418	525	630

1/ C = Acceptance number or number of failures permitted. C numbers greater than five shall be coordinated and approved by the qualifying activity.

4.6.3 Exemption of data. Exemptions of data requirement in MIL-STD-690 shall apply.

4.6.4 Qualification approval for higher FR. Qualification approval granted for one of the lower FR levels will include qualification for all of the higher FR levels; e.g., qualification approval for level "R" will include qualification approval for levels "P", "M", and "L".

4.7 In-process and quality conformance inspection.

4.7.1 In-process inspection (see 3 6).

4.7.1.1 Diode, transistor, and FET in-process screening (see 3 6.1). Each manufacturer shall establish diode, transistor, and FET screening processes as approved by the qualifying activity. As a minimum, these processes shall include a 24-hour minimum burn-in at +125°C minimum and may use MIL-STD-750 or MIL-STD-883 as a guide. These processes shall be performed prior to run-in (see 4.8.2.2).

4.7.2 Inspection of product for delivery Inspection of product for delivery shall consist of group A inspection.

4.7.2.1 Inspection and production lot.

4.7.2.1.1 Inspection lot. An inspection lot shall consist of all the relays of the same specification sheet, and those of similar design and construction as outlined in 6.3.2, manufactured under essentially the same process and conditions during a manufacturing period of 1 month maximum. The manufacturer shall define and document the period for an inspection lot. For purposes of lot formation, all terminal types may be included in the same lot; however, all lead types which are combined shall have the same method of terminal attachment. All leads in the lot shall be represented in a similar proportion by samples selected for inspection.

4 7.2.1 2 Production lot A production lot shall consist of all relays of the same PIN. Manufacture of all parts in the lot shall have been started, processed, assembled, and tested as a group. Lot identity shall be maintained throughout the manufacturing cycle

Downloaded from http://www.everyspec.com

4.7.2.2 Group A inspection. Group A inspection shall consist of the inspections specified in table V.

4.7.2.2.1 A1, A2, and A4 tests. The A1, A2, and A4 tests shall be performed on a production lot basis on 100 percent of the product supplied under this specification. Relays that do not meet specification requirements of these groups shall be removed from the lot.

4.7.2.2.1.1 Sampling plan. The tests in A1, A2, and A4 shall be performed on each relay offered for inspection, except as noted. When possible, these tests shall be witnessed by the Government inspector at the time they are performed by the contractor.

4.7.2.2.1.2 Rejected lots. Relays that do not meet the requirements of the tests in A1 and A4 shall be rejected and shall be removed from the lot. If more than 5 percent of the relays are discarded during A2 testing, the production lot shall be rejected and not offered for reinspection.

4.7.2.2.2 A3 tests.

4.7.2.2.2.1 Sampling plan. Two samples shall be selected randomly from each inspection lot and subjected to the A3 solderability test. If there are one or more defects, the lot shall be considered to have failed. Relays failing the A2 electrical tests, or rejected for other criteria which will not influence solderability, may be used for solderability testing. All rejected relays used as samples must accompany the acceptable relays through all processing environments. The rejected relays shall be marked in a definite manner in order to preclude mixing with acceptable parts.

4.7.2.2.2.2 Rejected lots. In the event of one or more defects, the inspection lot is rejected. The manufacturer may use one of the following options to rework the lot:

a. Each production lot that was used to form the failed inspection lot shall be individually submitted to the solderability test as required in 4.8.3. Production lots that pass the solderability test are acceptable for shipment. Production lots failing the solderability test can be reworked as described in 4.7.2.2.2.2b and 4.7.2.2.2.2c.

b. The manufacturer submits the failed lot to a 100 percent solder dip using an approved solder dip process in accordance with 3.5.7.4. Two additional samples shall be selected and subjected to the solderability test with zero defects allowed. If the lot fails this solderability test, the lot shall be rejected and shall not be furnished against the requirements of this specification.

c. The manufacturer may submit the failed lot to a strip and replate process followed by a complete group A inspection. The reworked lot shall be considered a new lot for the purpose of the 5 percent requirement of A2. If the lot fails this solderability test, the lot shall be rejected and shall not be furnished against the requirements of this specification.

4.7.3 Periodic inspections. Periodic inspections shall consist of groups B and C. Except where the results of these inspections show noncompliance with the applicable requirements (see 4.7.3.3), delivery of products which have passed group A shall not be delayed pending the results of these periodic inspections.

4.7.3.1 Group B inspection. Group B inspection shall consist of the tests in the order specified in table VI and shall be made on sample units which have been subjected to and have passed the group A inspection.

4.7.3.1.1 Sampling plan. The test sample size shall be determined by the manufacturer so that the relay cycles generated meet the maintenance of qualification requirements specified for the qualified failure rate level (see 4.4.4). A minimum quantity of samples shall be selected from each inspection lot as determined by the quantity needed to maintain the FR level divided by the number of inspection lots in the reporting period. In all cases, the sampling plan shall be approved by the qualifying activity. As far as is practicable, the relays tested during a maintenance period shall be representative of all relays produced during this period. The accumulated data shall be used for maintenance and extension of failure rate qualification.

4.7.3.1.2 Disposition of sample units. Sample units which have been subjected to group B inspection shall not be delivered on the contract or purchase order.

Downloaded from http://www.everyspec.com

TABLE V. Group A inspection.

Inspection	Requirement paragraph	Test method paragraph	Inspection requirements
A1 1/			
Vibration (sinusoidal)	3.15	4.8.10.1	
Vibration (random) 2/	3.15	4.8.10.2	100 percent
Screening, internal moisture	3.7	4.8.2.1	
Screening, run-in	3.7	4.8.2.2	
A2			
Dielectric withstanding voltage 3/	3.11	4.8.6	
Insulation resistance 3/	3.10	4.8.5	100 percent
Electrical characteristics 3/	3.12	4.8.7	
A3			
Solderability	3.8	4.8.3	2 samples
A4			
Visual and mechanical inspection (external) 4/ 5/	3.1, 3.28, 3.29, 3.30	4.8.1	100 percent
Seal	3.9	4.8.4	

1/ Tests shall be performed in the order shown.

2/ Random vibration shall be performed when specified (see 3.1).

3/ Coil current may be done prior to dielectric withstanding voltage and insulation resistance. Testing sequence is optional for insulation resistance and dielectric withstanding voltage prior to the electrical characteristics Turn-on voltage (or current), see 3.1, and turn-off voltage may be done after coil transient suppression voltage.

4/ Minor defects, such as marking, may be reworked

5/ It is intended that a two piece sample of each relay style be inspected in accordance with 6.3.2, except as limited by the housing style, external attachments, etc..

Downloaded from http://www.everyspec.com

TABLE VI. Group B inspection.

Inspection	Requirement paragraph	Test method paragraph
Life 1/	3.23	4.8.18
Dielectric withstanding voltage 2/	3.11	4.8.6
Insulation resistance 2/	3.10	4.8.5
Electrical characteristics 2/ 3/	3.12	4.8.7
Visual inspection (external)	3.1, 3.28, 3.29	4.8.1

1/ Sample units shall be tested in a predetermined sequence as defined by the manufacturer and approved by the qualifying activity. All loads specified in the applicable specification sheet shall be represented. All loads need not be represented in a 6-month maintenance period but shall be represented within two 6-month maintenance periods.

2/ Coil current may be performed prior to dielectric withstanding voltage and insulation resistance. The testing sequence is optional for insulation resistance and dielectric withstanding voltage prior to the electrical characteristics. Turn-on voltage (or current), see 3.1, and turn-off voltage may be done after coil transient suppression voltage.

3/ The coil resistance of hybrid relays is not directly measurable at the relay terminals due to the resistance of the drivers.

4.7.3.2 Group C inspection. Group C inspection shall consist of the tests in the order specified in table VII. Group C inspection shall be made on sample units selected from inspection lots which have passed the group A inspection.

4.7.3.2.1 Sampling plan. Three sample units shall be taken from production every month for C1, two samples for C2 every 6 months, two samples for C3 every 6 months, two samples for C4 every 6 months, two samples for C5 every 12 months, and two samples for C6 every 36 months.

4.7.3.2.1.1 Similarity. For purposes of complying with group C requalification, relays, of similar construction and processing may be combined (see 6.3.2.1 and 6.3.2.2).

4.7.3.2.2 Failures. No failures shall be permitted except for intermediate current in C1. 2/

4.7.3.2.3 Disposition of sample units. Sample units which have been subjected to group C inspection shall not be delivered on the contract or purchase order.

4.7.3.3 Noncompliance. During group B and C inspections, when a failure exceeds the allowable number of failures, the manufacturer shall notify the qualifying activity and the cognizant inspection activity of such failure within 5 working days. The manufacturer shall prepare to take corrective action on the materials or processes, or both, as warranted, and on all units of product which can be corrected and which were manufactured under essentially the same materials and processes, and which are considered subject to the same failure. Acceptance and shipment of the product shall be discontinued until corrective action, acceptable to the qualifying activity has been taken. After the corrective action has been taken, group B and C inspections shall be repeated on additional sample units (all tests, or the tests which the original sample failed, at the option of the qualifying activity). Group A inspection may be reinstituted; however, final acceptance and shipment shall be withheld until the group B or C inspection has shown that the corrective action was successful. In the event of failure after reinspection, information concerning the failure shall be furnished to the qualifying activity and the cognizant inspection activity within 5 working days.

2/ One intermediate current failure per 6-month retention period shall be permitted per FR groupings of similar relay types as approved by the qualifying activity.

Downloaded from http://www.everyspec.com

TABLE VII. Group C inspection.

Inspection	Requirement paragraph	Test method paragraph	Number of sample units for inspection
C1 (every month) 1/			
Intermediate current	3.24	4.8.19	
Dielectric withstanding voltage 2/	3.11	4.8.6	
Insulation resistance 2/	3.10	4.8.5	3
Electrical characteristics 2/	3.12	4.8.7	
Visual inspection (external)	3.1, 3.28,3.29	4.8.1	
C2 (every 6 months) 3/			
Voltage transients	3.27	4.8.22	
Thermal shock	3.13	4.8.8	
Shock (specified pulse) 4/	3.14	4.8.9	
Vibration 4/	3.15	4.8.10	
Terminal strength	3.17	4.8.12	2
Dielectric withstanding voltage 2/	3.11	4.8.6	
Insulation resistance 2/	3.10	4.8.5	
Electrical characteristics 2/	3.12	4.8.7	
Seal	3.9	4.8.4	
Visual inspection (external)	3.1, 3.28,3.29	4.8.1	
C3 (every 6 months)			
Overload (highest dc resistive load)	3.22	4.8.17.1	
Life (highest rated dc, 50,000 cycles) 5/	3.23	4.8.18.1	
Dielectric withstanding voltage 2/	3.11	4.8.6	2
Insulation resistance 2/	3.10	4.8.5	
Electrical characteristics 2/	3.12	4.8.7	
Visual inspection (external)	3.1, 3.28,3.29	4.8.1	
C4 (every 6 months)			
Mechanical life	3.25	4.8.20	
Dielectric withstanding voltage	3.11	4.8.6	
Insulation resistance	3.10	4.8.5	2
Turn-on time and turn-off time	3.12.6	4.8.7.6	
Visual inspection (external)	3.1, 3.28,3.29	4.8.1	

See footnotes at end of table.

Downloaded from http://www.everyspec.com

TABLE VII. Group C inspection - Continued.

Inspection	Requirement paragraph	Test method paragraph	Number of sample units for inspection
C5 (every 12 months) 3/			
Coil endurance	3.19.1	4.8.14.1	
Thermal Shock	3.13	4.8.8	
Vibration (sinusoidal)	3.15	4.8.10.1	
Resistance to soldering heat	3.20	4.8.15	2
Dielectric withstanding voltage 2/	3.11	4.8.6	
Insulation resistance 2/	3.10	4.8.5	
Electrical characteristics 2/	3.12	4.8.7	
Visual inspection (external)	3.1, 3.28,3.29	4.8.1	
Seal	3.9	4.8.4	
C6 (every 36 months) 3/			
Magnetic interference (when specified)	3.18	4.8.13	
Coil life	3.19	4.8.14	
Salt atmosphere (corrosion)	3.21	4.8.16	
Acceleration	3.16	4.8.11	2
Resistance to solvents	3.26	4.8.21	
Dielectric withstanding voltage 2/	3.11	4.8.6	
Insulation resistance 2/	3.10	4.8.5	
Electrical characteristics 2/	3.12	4.8.7	
Visual inspection (external)	3.1, 3.28,3.29	4.8.1	
Seal	3.9	4.8.4	

1/ One intermediate current failure per 6-month retention period shall be permitted per FR groupings of similar relay types as approved by the qualifying activity.

2/ Coil current may be performed prior to dielectric withstanding voltage and insulation resistance. The testing sequence is optional for insulation resistance and dielectric withstanding voltage prior to the electrical characteristics. Turn-on voltage (or current), see 3.1, and turn-off voltage may be done after coil transient suppression voltage.

3/ Relays with spreader or spacer pads shall not be subjected to the testing of this group.

4/ Each mounting configuration to which a manufacturer is qualified will be represented during the normal continuous periodic testing period. It will usually take more than one periodic testing period to achieve testing of all of the applicable mountings.

5/ Life testing requirements are not applicable to TO-5 and 0.100 grid style relays.

Downloaded from http://www.everyspec.com

4.7.4 Inspection of packaging. The sampling and inspection of the preservation and interior pack marking shall be in accordance with the group A and B quality conformance inspection requirements of MIL-P-116. The sampling and inspection of the packing and marking for shipment and storage shall be in accordance with the quality assurance provisions of the applicable container specification and the marking requirements of MIL-STD-129.

4.8 Methods of inspection.

4.8.1 Visual and mechanical. Relays shall be examined to verify that the materials, external design and construction, physical dimensions, marking, and workmanship are in accordance with the applicable requirements (see 3.1, 3.4, 3.5, 3.28, and 3.29). Paragraph 3.30 inspection requirements apply only when indicated.

4.8.2 Screening (see 3.7).

4.8.2.1 Internal moisture. Relays (coil de-energized) shall be held at +15°c to +25°C for a minimum of 30 minutes. The insulation resistance of all contact pins to case only shall be measured and observed. The relay coil shall be energized with 140 percent of rated voltage for a period of 2 minutes 30 seconds. 3/ The insulation resistance of all contact pins to case only shall be verified a minimum of once each 30 seconds during this period and the lowest value shall meet the requirements of 3.7.

4.8.2.2 Run-in.

a. High temperature. For qualification inspection only; relays shall be subjected to +125°C with rated supply voltage on the coil for 1 hour. For group A testing, relays shall be subjected to +125°C; the test chamber shall stabilize at +125°C after the specimens have been inserted into the test chamber. The test shall be performed with rated supply voltage on the coil circuit for 15 minutes minimum for relays weighing 1 ounce or less and 30 minutes minimum for relays weighing over 1 ounce but not more than .3 pound. The specified pickup value (voltage) shall be measured to determine compliance with 3.1. While at this temperature, the relays shall be subjected to a 2,500 cycle run-in test. The cycling rate shall be calculated using the formulas below and the maximum turn-on and turn-off times as specified, see 3.1 for the relay under test. Relays shall have the contacts loaded as follows: Open circuit load voltage 10 to 50 mV dc or peak ac. The load current shall be 10 to 50 µA. The contact resistance or voltage drop, as applicable, of each pair of mated contacts shall be monitored during 40 percent minimum of each "on" and each "off" period. The monitoring equipment shall automatically turn off when a failure occurs, or shall record every failure.

b. Low temperature. Following high temperature, for qualification only, relays shall be subjected to -65°C with the coil or coils de-energized for 1 hour. For group A testing, relays shall be subjected to -65°C; the test chamber shall stabilize at -65°C after the specimens have been inserted into the test chamber. The test shall be performed with the coil de-energized for 15 minutes minimum for relays weighing 1 ounce or less and 30 minutes minimum for relays weighing over 1 ounce but not more than .3 pound. At the end of either period, the specified dropout value (voltage) shall be measured to determine compliance with 3.1. While at this temperature, the relays shall be subjected to a 2,500 cycle run-in test in accordance with the procedure outlined in 4.8.2.2a.

$$\text{Maximum cycle rate (cycles per second)} = \frac{0.1}{\text{Maximum turn-on time (seconds)} + \text{Maximum turn-off time (seconds)}}$$

4.8.3 Solderability (see 3.8). Relays shall be tested in accordance with method 208 of MIL-STD-202. The following detail and exception shall apply: All terminations of each part shall be tested.

4.8.4 Seal (see 3.9). Relays shall be tested in accordance with 4.8.4.1 or 4.8.4.2 as applicable. In case of dispute, method 1014 of MIL-STD-883, test condition B shall govern.

3/ Wherever "coil shall be energized" is used herein, it is considered to include turn-on voltage applied.

Downloaded from http://www.everyspec.com

4.8.4.1 Relays sealed with a tracer gas. Relays sealed with a tracer gas shall be tested in accordance with method 112 of MIL-STD-202, or at the option of the manufacturer, method 1014 of MIL-STD-883. The following details shall apply:

a. Method 112 of MIL-STD-202:

(1) Test condition C, procedure IV. Relays shall be back-filled with a helium tracer gas (90 percent dry gas and 10 percent helium). Silicone oil shall not be used.

(2) Leakage rate sensitivity: 1×10^{-8} atm cm^3/s.

(3) Measurements after test: Not applicable.

b. Method 1014 of MIL-STD-883, test condition B (gross leak test not required).

4.8.4.2 Relays sealed without a tracer gas. Relays sealed without a tracer gas shall be tested in accordance with method 1014 of MIL-STD-883. At the option of the manufacturer, either 4.8.4.2a. or 4.8.4.2b. may be used. The following details shall apply:

a. Method 1014 of MIL-STD-883:

(1) Test condition A_1 or A_2.

(2) Measurements after test: Perform a gross leak test in accordance with method 112 of MIL-STD-202, test condition A, B, or D. Silicone oil shall not be used. At the option of the manufacturer, the gross leak test of method 1014 of MIL-STD-883, test condition C may be used.

b. Method 1014 of MIL-STD-883, test condition B (gross leak test not required).

4.8.5 Insulation resistance (see 3.10). Relays shall be tested in accordance with method 302 of MIL-STD-202 with the relay in the energized and de-energized positions. Short the terminal of the hybrid device to prevent damage to the hybrid device during testing. The following details shall apply unless otherwise specified (see 3.1):

a. Test conditions: A (for relays with coil and contact ratings both below 60 volts) and B (for all other relays).

b. Points of measurement: As specified in points of application in table VIII.

c. Attributes data is acceptable.

4.8.6 Dielectric withstanding voltage (see 3.11). Relays shall be tested as specified in 4.8.6.1 and in accordance with 4.8.6.2. Testing in accordance with 4.8.6.2 is not required for group A testing. Short the terminal of the hybrid device to prevent damage to the hybrid device during testing.

4.8.6.1 At atmospheric pressure. Relays shall be tested in accordance with method 301 of MIL-STD-202. The following details shall apply unless otherwise specified (see 3.1):

a. Points of application and magnitude of test voltage: As shown in table VIII.

b. Maximum leakage current: 100 μA.

c. Duration of application: 60 seconds minimum for qualification and groups B and C tests; 5 (60 Hz) cycles minimum for group A tests on test equipment which has an adequate response time to measure the leakage current and is approved by the qualifying activity. For group A tests on other than automatic test equipment (i.e., bench setup), the application time shall be 5 seconds minimum.

d. Attributes data is acceptable.

Downloaded from http://www.everyspec.com

TABLE VIII. Test details for dielectric withstanding voltage.

Points of application	Test voltage
Between case, frame, or enclosure and between all contacts in the energized and de-energized positions Between case, frame, or enclosure and coil Between all contacts and coil Between open contacts in the energized and de-energized positions Between contact poles in the energized and de-energized positions (applicable to multipole relays)	1,000 ±5 percent volts ac plus twice rated voltage or the specified value ±5 percent

4.8.6.2 At reduced barometric pressure. Relays shall be tested in accordance with method 105 of MIL-STD-202. The following details shall apply:

a. Method of mounting: Normal mounting means.

b. Test condition: C.

c. Tests during subjection to reduced pressure: As specified in 4.8.6.1, except test voltage shall be 350 volts unless otherwise specified (see 3.1).

d. Points of application of test voltage: All terminals to case.

e. Duration of application: 60 seconds minimum for qualification and groups B and C tests.

f. Attributes data is acceptable.

4.8.7 Electrical characteristics (see 3.12).

4.8.7.1 Static contact resistance (see 3.12.1). Relays shall be tested in accordance with method 307 of MIL-STD-202. The following details and exceptions shall apply:

a. Method of connection: For relays with wire-lead terminals, this measurement shall be made .125 inch (3.18 mm) maximum from the emergence of the lead from the relay or bottom of the spreader or spacer pad.

b. Test load: 10 mA maximum at 6 V maximum (dc or peak ac).

c. Post test loads for high level life and intermediate current: Current and voltage shall be the same as the life or intermediate current test or 100 mA maximum at 28 V dc maximum.

d. Points of measurements:

(1) Between all normally closed mated contacts.

(2) Between all normally open mated contacts, with the coil energized with rated coil voltage (or current).

e. Number of activations prior to measurement: None.

f. Number of test activations: Three.

g. Number of measurements per activation: One in each closed contact position.

Downloaded from http://www.everyspec.com

4.8.7.2 Pickup, hold, and dropout voltages (turn-on voltage or current applied) (see 3.12.2). Pickup, hold, and dropout voltages shall be measured as specified in 4.8.7.2.1, 4.8.7.2.2, or 4.8.7.2.3. For qualification inspection, the relay shall be mounted in each of three mutually perpendicular planes, unless otherwise specified (see 3.1). For quality conformance inspection, the relay mounting position is optional. A suitable indicating device shall be used to monitor contact position. During the test, all contacts shall not change state (break or remake) when the coil is energized above the pull-in voltage, when the coil voltage is lowered to any value above the specified hold (maximum) dropout voltage or when the coil voltage is reduced from the (minimum) dropout voltage to zero. It is permissible to perform pickup, hold, and dropout voltages using step function voltage changes as specified in 4.8.7.2.1 or 4.8.7.2.2, 4.8.7.2.3, and 4.8.7.2.4. Due to the fact that slow ramping will overheat relay coils and vary pickup, hold, and dropout voltages, the step function method shall be the governing method in cases of dispute.

4.8.7.2.1 Pickup voltage (turn-on voltage or current applied). The voltage shall be increased from zero until the relay operates, and the pickup voltage shall be measured. It is permissible to perform pickup, hold, and dropout voltage using a step function voltage changes as follows and as illustrated on figure 3.

a. Step up to the maximum pickup voltage, contacts should have transferred and all normally-open contacts should be made.

b. Increase to rated coil voltage.

c. Step down to hold voltage. Normally-open contacts must still be making.

d. Step down to dropout voltage, all contacts should have transferred and all normally-closed contacts should be making.

e. Step down to zero voltage.

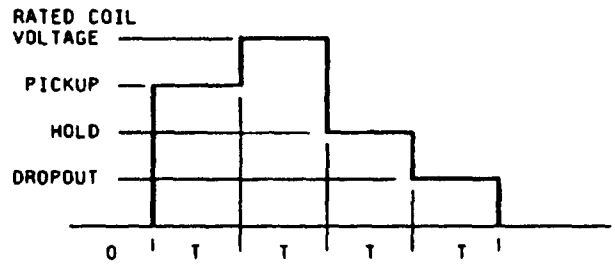

FIGURE 3. Pickup, hold, and dropout sequencing.

4.8.7.2.2 Hold voltage (turn-on voltage applied). Rated voltage shall be applied to the coil. The voltage shall then be reduced to the specified hold voltage (see 3.1). All contacts shall not change state. It is permissible to perform this test using the step function voltage program described in 4.8.7.2.1 and figure 3.

4.8.7.2.3 Dropout voltage (turn-on voltage applied). Rated voltage shall be applied to the coil. The voltage shall then be gradually reduced until all contacts return to the deenergized position and the dropout voltage shall be measured. It is permissible to perform this test using the step function voltage program described in 4.8.7.2.1 and figure 3.

4.8.7.3 Coil current and coil resistance (see 3.12.3).

4.8.7.3.1 Coil current (see 3.12.3). When rated voltage is applied to the coil terminals the current must be within the limits as specified (see 3 12.3 1). Apply at rated voltage for 5 seconds maximum.

4.8.7.3.2 Coil resistance (see 3.12 3.2). Coil resistance is approximately calculated as follows: The rated voltage of the coil shall be divided by the coil current.

Downloaded from http://www.everyspec.com

4.8.7.4 Turn-on voltage (coil supply voltage on) (see 3 12.4). Apply rated coil supply voltage (see 3.1). The turn-on voltage shall then be applied. Verify that the relay has turned on. For qualification inspection, the relay shall be mounted in each of three mutually perpendicular planes, unless otherwise specified (see 3.1). For quality conformance inspection, the relay mounting position is optional. A suitable indicating device shall be used to monitor contact operation.

4.8.7.5 Turn-off voltage (coil supply voltage on) (see 3 12 5). Rated coil supply voltage and control signal voltage shall be applied to the relay (see 3.1). The control signal shall be reduced to maximum turn-off voltage. Verify that the relay has turned off (see 3.1). For qualification inspection, the relay shall be mounted in each of three mutually perpendicular planes, unless otherwise specified (see 3.1). For quality conformance inspection, the relay mounting position is optional. A suitable indicating device shall be used to monitor contact operation.

4.8.7.6 Turn-on time and turn-off time (see 3.12 6). The turn-on time and the turn-off time shall be measured using an oscilloscope or other acceptable means approved by the qualifying activity. Rated coil supply voltage shall be applied to the relay during toggling of the control signal. The circuit shown on figure 4, or equivalent, shall be used. The turn-on time and the turn-off time shall be exclusive of contact bounce Timing measurements shall be made on all contact sets.

4.8 7.6.1 Break before make (see 3 12 6.1). The circuit shown on figure 5 or an equivalent circuit approved by the qualifying activity shall be used to monitor contact position.

4 8 7 7 Contact dynamic characteristics (see 3 12 7)

4 8.7 7 1 Contact bounce (applicable to failure level rate "L") (see 3 12.7 1). Contact bounce shall be measured on each contact set using an oscilloscope or other acceptable means approved by the qualifying activity The trace shall show contact switching at turn-on and turn-off and appropriate timing markers when using an oscilloscope Rated voltage shall be applied to the coil. Contacts shall be loaded with 6 V dc maximum or peak ac at 10 mA maximum After high level rated load life and intermediate current tests, contact bounce shall be measured at 100 mA maximum at 28 V dc maximum. A contact bounce shall be considered any occurrence equal to or greater than 90 percent of the open circuit voltage with a pulse width of 10 μs or greater. The circuit shown on figure 4, or equivalent, shall be used.

4 8 7.7.2 Contact stabilization time (applicable to failure rate levels "M", "P", and "R") (see 3 12 7 2). Contact stabilization time shall be measured on each contact set using an oscilloscope of other acceptable means approved by the qualifying activity. The equipment shall have the capability of indicating a failure pulse width of greater than 1 μs The trace shall show contact switching at operate and release, appropriate timing markers and maximum allowable contact voltage drop markers (which equates to the allowable static contact resistance) when measured using an oscilloscope Rated voltage shall be applied to the coil Contacts shall be loaded with 50 mV dc maximum or peak ac at 50 mA maximum. Contact stabilization time shall be defined as the maximum time allowed for the contacts to reach and maintain a static contact resistance state following the actual operate or release time of the relay (essentially, it is the sum of the contact bounce time and the time for the dynamic contact resistance to stabilize to the static contact resistance). After high level rated load life and intermediate current tests, the contacts shall be loaded at 100 mA at 28 V dc maximum, and test voltage and contact bounce in lieu of contact stabilization time shall be measured as specified in 4.8 7 7.1

Downloaded from http://www.everyspec.com

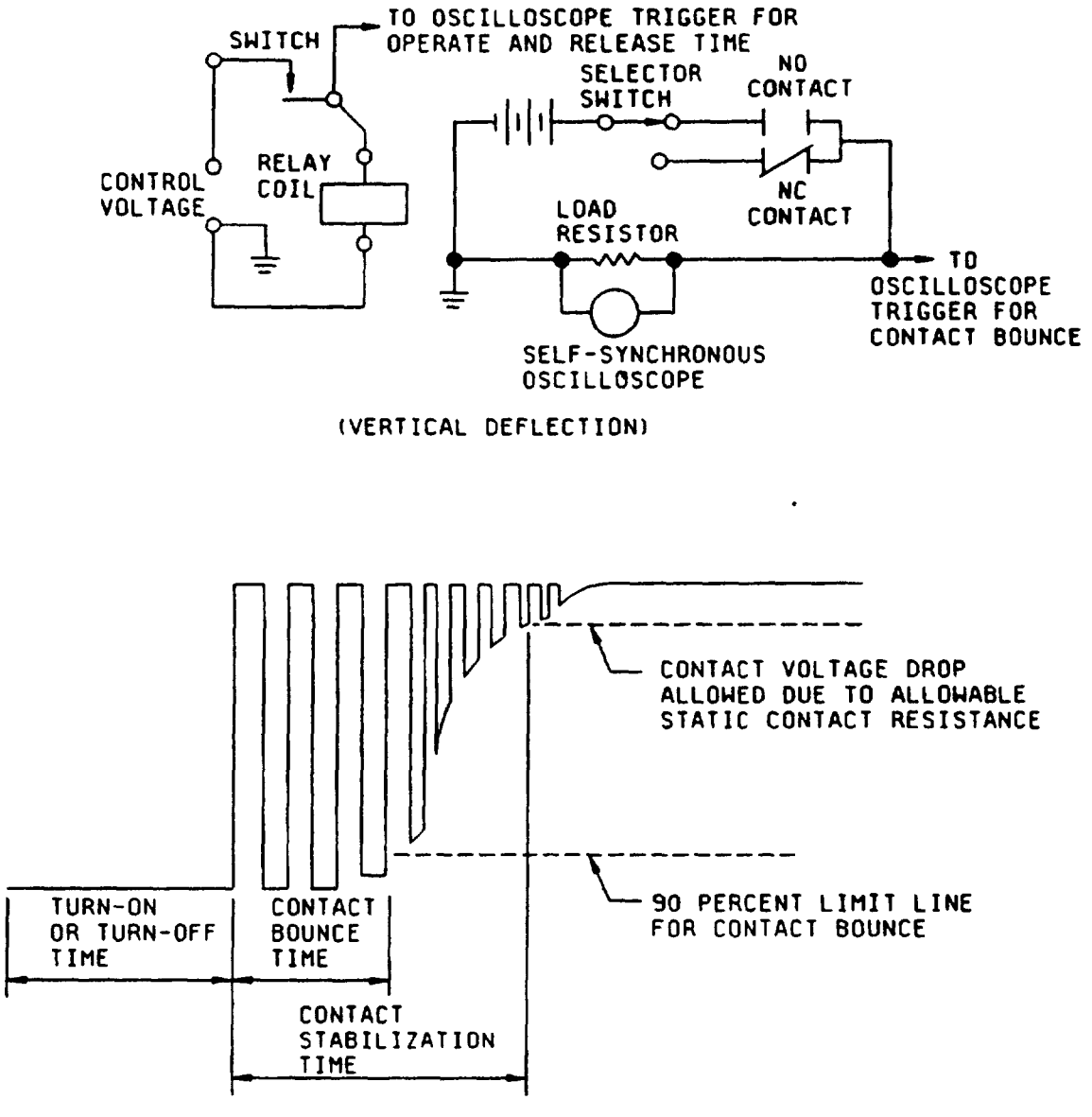

FIGURE 4. Typical circuit for turn-on and turn-off time, contact bounce and contact stabilization time with typical traces.

Downloaded from http://www.everyspec.com

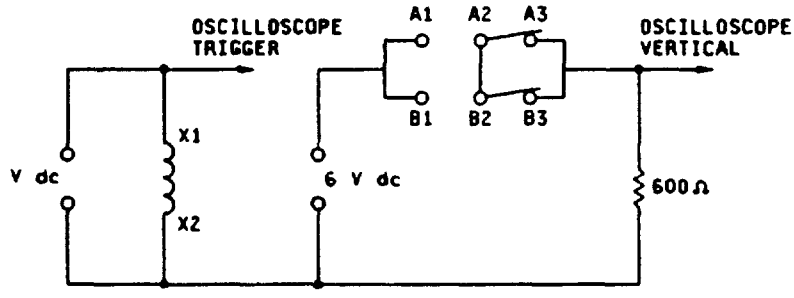

FIGURE 5. Typical break before make test circuit.

4.8.7.8 Coil transient suppression.

4.8.7.8.1 Coil transient suppression (applicable to dc operated relays with internal coil transient suppression (see 3.12.8). The coil shall be connected as shown on figure 6 or by an equivalent test circuit.

NOTE: Voltage greater than the maximum specified may damage the coil suppression device.

a. The switching relay shall be a mercury wetted contact switching relay. E is the nominal operating voltage for the relay under test. The switching relay is operated from a source voltage independent of E. CRO is cathode-ray oscilloscope with a rise time of .020 µs or less. The horizontal (time) deflection scale shall be set at 0.5 to 1 ms per division (0.5 to 1 ms/cm), and the vertical (voltage) deflection to be such that the vertical gain provides accuracy in reading. Example: 5 V/cm for a 12 V back EMF limit, or 10 V/cm for a 24 V back EMF limit. Both horizontal (time) and vertical (voltage) deflection traces shall be of a calibrated grid spacing (i.e., cm or mm).

b The source, E, shall be a low impedance source capable of delivering the rated coil voltage with no limiting resistor or potentiometer used to regulate the line voltage.

c. The switching relay shall be closed for a minimum of ten times the turn-on time of the test relay, or switching relay whichever is longer, to allow the oscilloscope and circuit network to stabilize and then opened to obtain the induced voltage deflection trace. The relay is to be driven at a 10 ±2 Hz cycling rate with approximately equal open and closed times.

(1) The reading shall be observed on the oscilloscope or other equivalent electronic test instrumentation. The magnitude of the induced voltage transient shall be noted. A typical trace is presented on figure 7.

(2) The maximum value of three consecutive readings shall be noted.

d. For group A testing, only one measurement and other suitable test methods may be used to verify that the back EMF (coil kick) is within the specified limit.

Downloaded from http://www.everyspec.com

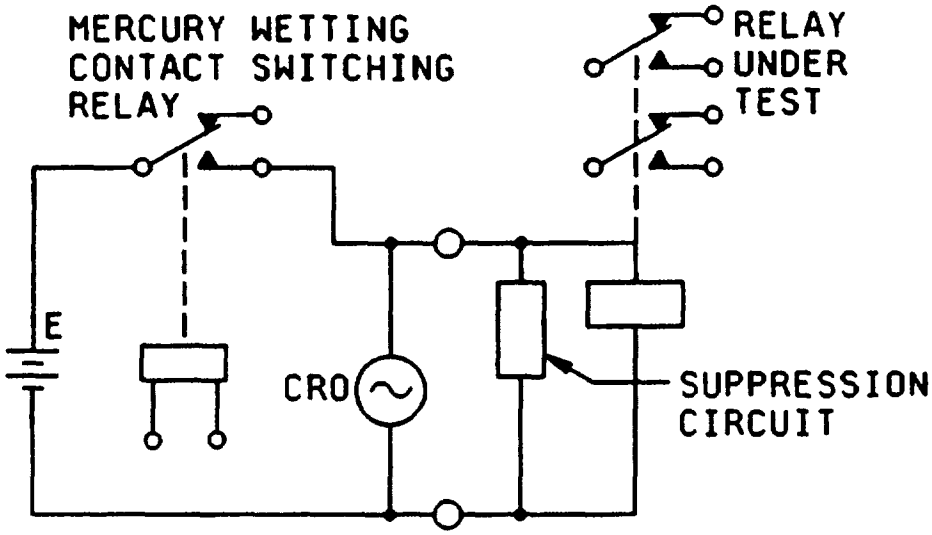

FIGURE 6. Coil transient suppression test circuit.

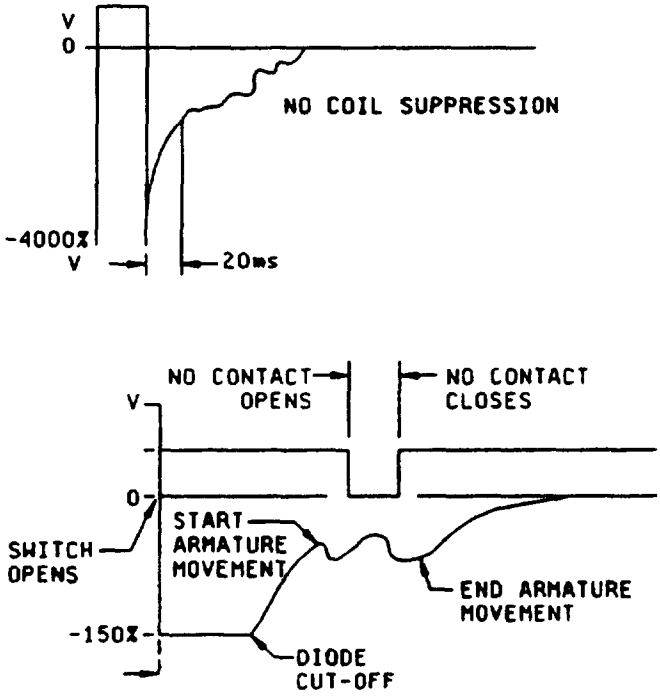

FIGURE 7. Typical transient voltage.

Downloaded from http://www.everyspec.com

4.8.8 Thermal shock (see 3.13). Relays shall be tested in accordance with method 107 of MIL-STD-202. The following details and exceptions shall apply:

a. Special mounting: Relays shall be suspended in the test chamber by twine, test socket, or other nonheat-conducting material. Test leads may be used for mounting; however, they shall not exceed the diameter or cross section of the device lead. (NOTE: When test sockets are used, the surface of the header shall not directly contact with the surface of the socket and the leads of the socket shall not exceed the diameter or cross section of the device lead).

b. Test condition: B, except exposure time at temperature extreme during the fifth cycle shall be for 2 hours each.

c. Measurements at each temperature extreme during steps 1 and 3 of this fifth cycle at the end of each temperature exposure, and with the relays still in the conditioning chamber, the insulation resistance, pickup, hold, dropout, turn-on, and turn-off voltages, and turn-on and turn-off times, shall be measured as specified in 4.8.5, 4.8.7.2, 4.8.7.4, and 4.8.7.6 respectively. Pickup, hold, and dropout voltages shall be measured in any position.

d. Examination after test: Relays shall be visually examined for cracking, peeling, and flaking of the finish, and the dielectric withstanding voltage shall then be measured as specified in 4.8.6 1.

4.8.9 Shock (specified pulse) (see 3.14). Unless otherwise specified (see 3.1), relays shall be tested in accordance with method 213 of MIL-STD-202. The following details and exceptions shall apply:

a. Mounting method For relays having flanges or studs, mounting shall be by the flanges or studs; and for relays without flanges, mounting shall be by plugging into sockets, or other suitable means approved by the qualifying activity.

b. Test condition: A, B, or C, as applicable (see 3.1).

c. Electrical-load conditions: In each direction of shock, the coil shall be deenergized during two shocks and energized with rated voltage during one shock.

d. Measurements during shock· Contacts shall be monitored with an adequate test circuit as approved by the qualifying activity The test circuit shall verify that no opening of closed contacts in excess of 10 μs and no false closure or bridging of open contacts occurs in excess of 1 μs. The contact load shall be 10 mA maximum at 6 V dc maximum (dc or peak ac).

e. Examination after test: Relays shall be inspected for evidence of structural failure or other damage which might impair the operation of the relay.

4.8.10 Vibration (see 3.15).

4.8.10.1 Vibration (sinusoidal). Unless otherwise specified (see 3 1), relays shall be tested in accordance with method 204 of MIL-STD-202. The following details and exceptions shall apply:

a. Method of mounting: As specified in 4.8.9a

b. Electrical-load conditions: For qualification and group C inspections, relays shall be tested with the coil energized for 2 hours at rated voltage and with the coil de-energized for 2 hours, in each of the three mutually perpendicular (x, y, and z) directions. Contacts shall be loaded as specified in 4.8.10.1d.

c. Test condition: D, except vibration level is the lesser of .195 inch (4.95 mm) double amplitude of 30 G, and frequency range is 10 to 3,000 Hz.

d Tests during vibration: As specified in 4.8.9e

Downloaded from http://www.everyspec.com

e. For group A testing, only one cycle shall be performed over the frequency range of 100 Hz to 3,000 Hz unless otherwise specified (see 3.1). The relay shall be vibrated in the direction of contact motion. At the option of the manufacturer, the relay production lot may be divided in three equal groups and each group shall be tested in one of three mutually perpendicular axis (X, Y, and Z). When relays are tested as specified in the optional procedure, a failure of any relay in any axis shall require 100 percent inspection of all relays in the production lot in each axis. For all contact forms except contact form "A", the cycle shall consist of 3 minutes up with the coil energized with rated voltage and 3 minutes down with coil de-energized. The cycle for form contact "A" shall consist of 3 minutes up with the coil de-energized and 3 minutes down with the coil energized.

f. Examination after test: Prior to removal from test fixture and without disturbing the relay, apply maximum over the temperature range pick-up voltage value and turn-on voltage (see 3.1) to the relay, and then verify that relay contacts transfer. Remove coil voltage and turn-on voltage, and then verify that relay contacts transfer. Failure of relay contacts to transfer shall be cause for rejection. After removal from test fixture, the relays shall then be inspected for evidence of structural failure or other damage which might impair the operation of the relay.

4.8.10.2 Vibration (random). Relays shall be tested in accordance with method 214 of MIL-STD-202. The following details and exceptions shall apply:

a. Method of mounting: As specified in 4.8.9a.

b. Electrical-load conditions: For qualification and group C inspections, relays shall be tested with the relay energized at rated voltage for 15 minutes and with the coil de-energized for 15 minutes, in each of three mutually perpendicular (x, y, and z) directions. When applicable to group A inspection, the test time shall be 3 minutes for each state described above. Contacts shall monitored as specified in 4.8.10.2d.

c. Test condition: IG (0.4 G^2/Hz, 23.91 rms G).

d. Tests during vibration: As specified in 4.8.9d.

e. Examination after test: As specified in 4.8.10.1f.

4.8.11 Acceleration (unless otherwise specified, see 3.1 and 3.16). Relays shall be tested in accordance with method 212 of MIL-STD-202. The following details and exceptions shall apply:

a. Mounting of specimens: As specified in 4.8.9a.

b. Test conditions: Test condition A, 50 G's, unless otherwise specified (see 3.1), (acceleration shall be applied in each direction along three mutually perpendicular axes (x, y, and z) of the specimen; one axis shall be in the direction most likely to cause malfunction). In each direction, the coil shall be de-energized for 5 minutes, rated coil voltage shall be momentarily applied, and the voltage shall be reduced to the maximum ambient pickup voltage as specified (see 3.1) for 5 minutes. Contacts shall be monitored for proper position.

c. Examination after test: As specified in 4.8.9e.

4.8.12 Terminal strength (see 3.17). Relays shall be tested in accordance with method 211 of MIL-STD-202 in accordance with the following, as applicable. Unless otherwise specified herein, two terminals of each discrete design, size, and configuration shall be tested; however, if there be only one of such design, size, and configuration, it shall be tested.

4.8.12.1 Pull test (all terminal types). Terminals shall be tested as specified in test condition A; the force shall be as specified (see 3.1).

4.8.12.2 Bend test (all terminal types). Terminals shall be tested as specified in test condition B (two bends) of C, as applicable. Loads for test condition C shall be as specified (see 3.1).

Downloaded from http://www.everyspec.com

4.8.12.3 Twist test (wire lead terminals only) (not applicable to relays with spreader pads or leads less than .50 inch (12.7 mm) in length). All terminals shall be tested as specified in test condition D, except during application of torsion, each terminal shall be rotated 45° in one direction, then returned to start; rotated in opposite direction 45°, then returned to start. Each terminal shall be subjected to two such rotations and returns. Each terminal shall be held at a point .75 inch (19.05 mm) from the point of emergence from the relay, or terminal end for relays with terminals less than .75 inch (19.05 mm), and in one plane shall be bent 20° ±5° in one direction, then returned to start; bent in opposite direction 20°±5°, then returned to start. This procedure shall then be repeated in the perpendicular plane. Following these tests, relays shall be examined for evidence of loosening or breaking of the terminals and other damage that could adversely affect the normal operation of the relay; the requirements of 3.30 are not applicable.

4.8.13 Magnetic interference (when specified, see 3.1 and 3.18). The relay under test and eight similar relays shall be mounted in the same physical orientation by nonmagnetic means, as shown on figure 8. Unless otherwise specified, grid-spaced relays shall be mounted so that all terminals are positioned in the closest possible grid pattern. The spacing between terminals and tops of adjacent terminals shall be as shown on figure 8 unless otherwise specified. Pickup, hold, dropout, turn-on, and turn-off voltages shall be measured on the relay under test as specified in 4.8.7.2, 4.8.7.4, and 4.8.7.5 with the coils of the eight outer relays energized at rated voltage (the magnetic polarity of each relay shall be similarly oriented). This measurement shall be repeated with the coils of the eight outer relays de-energized.

4.8.14 Coil life (unless otherwise specified, see 3.1) (see 3.19). Relays shall be tested for 1,000 hours as follows (see figure 9).

a. Relays may be mounted as specified in 4.3.6. Each contact terminal shall be connected as specified in 4.8.7.1a.

b. During the maximum temperature portion of the test, rated coil supply voltage (see 3.1) shall be applied continuously and at least half of the normally open contacts shall carry rated current. During room temperature and minimum temperature exposures, the coil circuit shall be de-energized and contacts shall not be loaded. Ambient temperatures shall be varied as shown on figure 9, with heating and cooling rates not to exceed +1°C per second average. The portion of the cycle run at minimum temperature shall be approximately 10 percent of the test cycle time.

c. After the first 100 hours, and while still at the low temperature extreme, contact resistance (or voltage drop) and turn-on and turn-off time shall be measured as specified in 4.8.7.1 and 4.8.7.6 and the values shall be recorded. Measurements of coil current as specified, and contact resistance as specified in 4.8.7.3 and 4.8.7.1, shall be taken at room temperature initially, then again after 250 ±25, 500 ±25, and 750 ±25 hours and the values shall be recorded. Pickup, hold, dropout, turn-on voltage or current, and turn-off voltage measurements shall be made as specified in 4.8.7.2, 4.8.7.4, and 4.8.7.6, respectively during the last temperature cycle after allowing the relay to stabilize, deenergized at each of the temperature extremes, and the values shall be recorded.

d. After the relay(s) have been subjected to the coil life temperature cycles, measurements shall then be taken at room temperature of dielectric withstanding voltage, insulation resistance, contact resistance, coil current, turn-on and turn-off time, and contact bounce as specified in 4.8.6.1, 4.8.5, 4.8.7.1, 4.8.7.3, 4.8.7.6, and 4.8.7.7, respectively. Relays shall then be examined for evidence of damage.

e. Examination after test: As specified in 4.8.9e.

Downloaded from http://www.everyspec.com

0.100, grid pin pattern

TO-5, round pin pattern

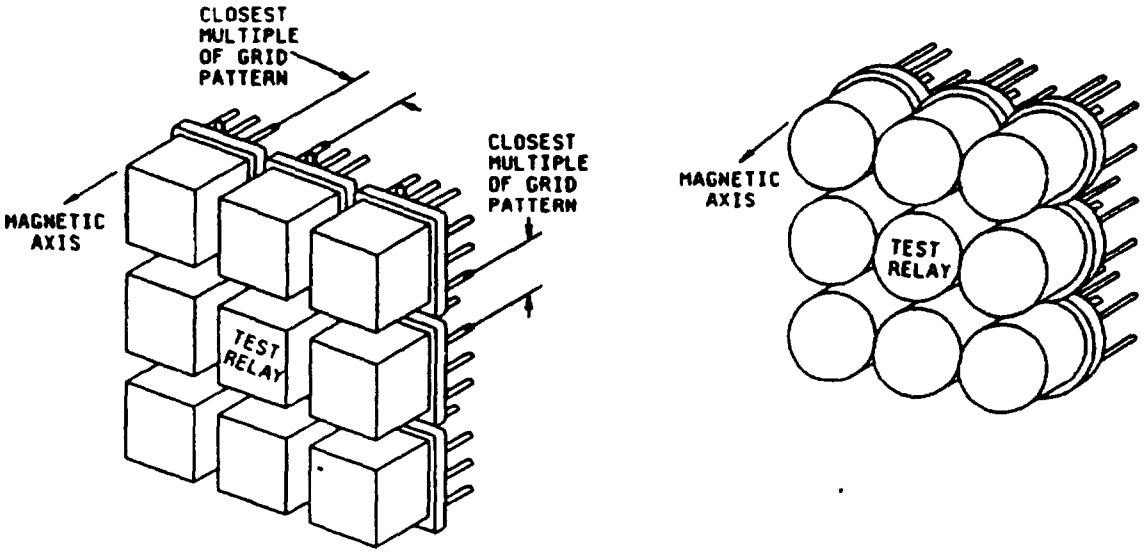

FIGURE 8. Mounting arrays for adjacent similar relays.

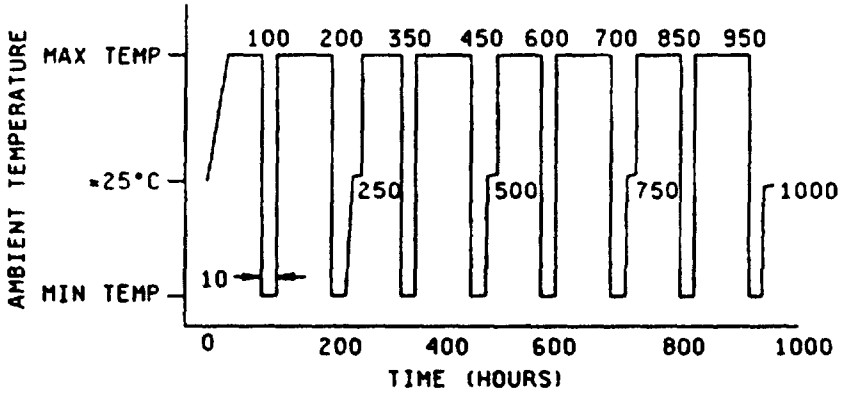

FIGURE 9. Ambient temperatures.

Downloaded from http://www.everyspec.com

4.8.14.1 Coil endurance (see 3.19.1). Relays shall be tested for 114 hours minimum as follows:

a. The coil current shall be tested in accordance with 3.12.3 prior to testing and shall be as specified (see 3.1).

b. Relays may be mounted as specified in 4.3.5. Each contact terminal shall be connected as specified in 4.8.7.1a.

c. The test chamber shall be controlled to maintain the maximum specified ambient temperature (see 3.1).

d Apply the maximum coil voltage (see 3.1) at a cycling rate of 4 ±.4 seconds on and 2 ±.2 seconds off for 114 hours minimum.

f. Following the test, the coil resistance shall be measured in accordance with 3.12.3 and shall be as specified (see 3.1).

4.8.15 Resistance to soldering heat (see 3.20). Relays shall be tested in accordance with method 210 of MIL-STD-202 The following details and exceptions shall apply:

a. Depth of immersion in molten solder Within .060 ±.020 inch (1.52 ±0.51 mm) of the relay base.

b. Test condition: B.

c. Measurements after test: Insulation resistance, contact resistance, pickup, hold, dropout, turn-on, and turn-off voltage, and coil current shall be measured as specified in 4.8.5, 4.8.7.1, 4.8.7.2, 4.8.7.3, 4.8.7.4, 4.8.7.6 respectively.

d. Examination after test: As specified in 4.8.9e

4.8.16 Salt spray or salt atmosphere (corrosion) (see 3.21). Relays shall be tested as specified in 4.8.16.1 or, when specified (see 3.1), in accordance with 4.8.16.2.

4 8.16 1 Salt spray, MIL-STD-202 (see 3.21) Relays shall be tested in accordance with method 101 of MIL-STD-202 unless otherwise specified. The following details and exceptions shall apply:

a. Applicable salt solution: 5 percent.

b. Test condition: B.

c. Examination after test: Relays shall be examined for evidence of peeling, chipping, blistering of the finish, and exposure of base metal due to corrosion that can adversely affect the operation or performance of the relay.

4.8 16.2 Salt atmosphere (corrosion), MIL-STD-750 (when specified, see 3.1). Relays shall be tested in accordance with method 1041 of MIL-STD-750. The following detail shall apply· Examination after test: As specified in 4.8.16.1c.

4.8.17 Overload (applicable to high level relays only) (see 3.22). Relay contacts (both normally open and normally closed) shall be subjected to the tests specified in 4.8.17.1 through 4.8.17.2, as applicable. For double-throw relays, separate tests shall be performed for the normally open and the normally closed contacts. Relay coil energization shall be nonsynchronous with the power supply for ac loads. The number of cycles shall be 100 for dc contact loads, and 200 for ac contact loads ("on" and "off" times shall be approximately equal). The coil circuit shall be energized at rated voltage. Overload current shall be twice the rated load current. The opening and closing of all contacts under test shall be continuously monitored to detect switching of the contacts. The equipment shall be capable of monitoring 40 percent minimum of the actual opened and closed time of each contact. The equipment shall automatically cut off when a failure occurs, or shall record any failures. The relay case shall be connected to system-ground through a normal-blow fuse rated at 5 percent of the test current of 100 mA, whichever is greater. After the test, the fuse shall be tested for electrical continuity.

4 8 17.1 Resistive load. Suitable noninductive resistors shall be used. Cycling rate shall be 20 ±2 cycles per minute (cpm).

Downloaded from http://www.everyspec.com

4.8.17.2 Inductive load. Cycling rate shall be 10 ±1 cpm. Inductive load testing shall be performed as recommended by MIL-HDBK-338 and approved by the qualifying activity.

4.8.17.2.1 Inductive load, dc. Unless otherwise specified (see 3.1), dc inductive loads shall be computed in accordance with the following procedure:

a The relay shall be mounted in its normal operating position on a nonmagnetic plate with no immediately adjacent metal.

b. The load circuit shall be energized through a bounce free contact from a power supply regulated to within 5 percent of the specified rated voltage as shown on figure 10.

c. By measuring the time for the current to reach 63 percent of its final value, the dc inductance is calculated as:

$L = Rt$ where

L is the inductance in henries,
R is the resistance of the load circuit, and
t is the time in seconds for current to reach 63 percent of its final value.

4.8.17.2.2 Inductive load, ac. The load shall consist of inductive and resistive elements with 0.7 ±0.05 lagging power factor at the voltage and frequency specified (see 3.1).

4.8.18 Life (see 3.23 and 6.8). Unless otherwise specified (see 3.1), relays shall be operated for 100,000 cycles with contacts loaded in accordance with 4.3.3 and 4.8.18.1 through 4.8.18.4, as applicable. Relay coil energization shall be nonsynchronous with the power supply for ac loads. Each relay case shall be connected to system ground through an individual normal-blow fuse rated at the greater of 100 mA or 5 percent of load current. The ambient temperature of the interior of the test chamber shall be +125°C minimum. The contact resistance or voltage drop, as applicable, shall be monitored during 40 percent minimum of each "on" and each "off" period. The monitoring equipment shall automatically hold the relay under test in the state in which the failure occurs (energized or de-energized) and the contact voltage shall be removed. All contacts in each sample unit shall switch identical loads. Following cycling, the electrical continuity of each case-grounding fuse shall be checked.

4.8.18.1 Resistive load. Cycling rate shall be 20 ±2 cycles per minute. Suitable resistors shall be used. Current shall be rated resistive current as specified (see 3.1).

4.8.18.2 Inductive load. Cycling rate shall be 10 ±1 cycles per minute with approximately equal "on" and "off" periods. Current shall be rated current. Appropriate inductive load components (see 4.8.17.2.1 and 4.8.17.2.2, as applicable) shall be used. A suitable resistor may be placed in the circuit to obtain rated steady-state current flow. Inductive load testing shall be performed as recommended by MIL-HDBK-338 and approved by the qualifying activity.

4.8.18.3 Lamp load. Unless otherwise specified, the lamp load shall be performed with a 28 V dc power supply voltage. Either lamps or simulated loads may be used to provide the load as follows:

a Simulated loads shall subject the relays to making 12 times the rated lamp load and breaking the rated lamp load. The duration of the 12 times inrush shall be 0.015 to 0.020 second. The total "ON" time shall be 5 ±0.05 seconds and the "OFF" time shall be 5 ±0.05 seconds.

b. Lamps shall be screened to verify a minimum initial cold inrush of 12 times the rated lamp load. Only lamps meeting this requirement shall be used to provide load to the relays. The total "ON" time shall be 2 ±0.05 seconds and the "OFF" time shall be 7 ±2 seconds.

4.8.18.4 Low level load. The minimum cycle time shall be 10X the sum of the maximum turn-on and turn-off (see 3.1) times for the relay under test. Each contact load shall be 10 to 50 μA at 10 to 50 mV (dc or peak ac). The coil circuit shall be energized at rated coil supply voltage during 50 ±10 percent of each operation. Example: 10 x 8 ms = 80 ms which would be a maximum of 12.5 cycles (one opening and one closure of a set of contacts) per second.

Downloaded from http://www.everyspec.com

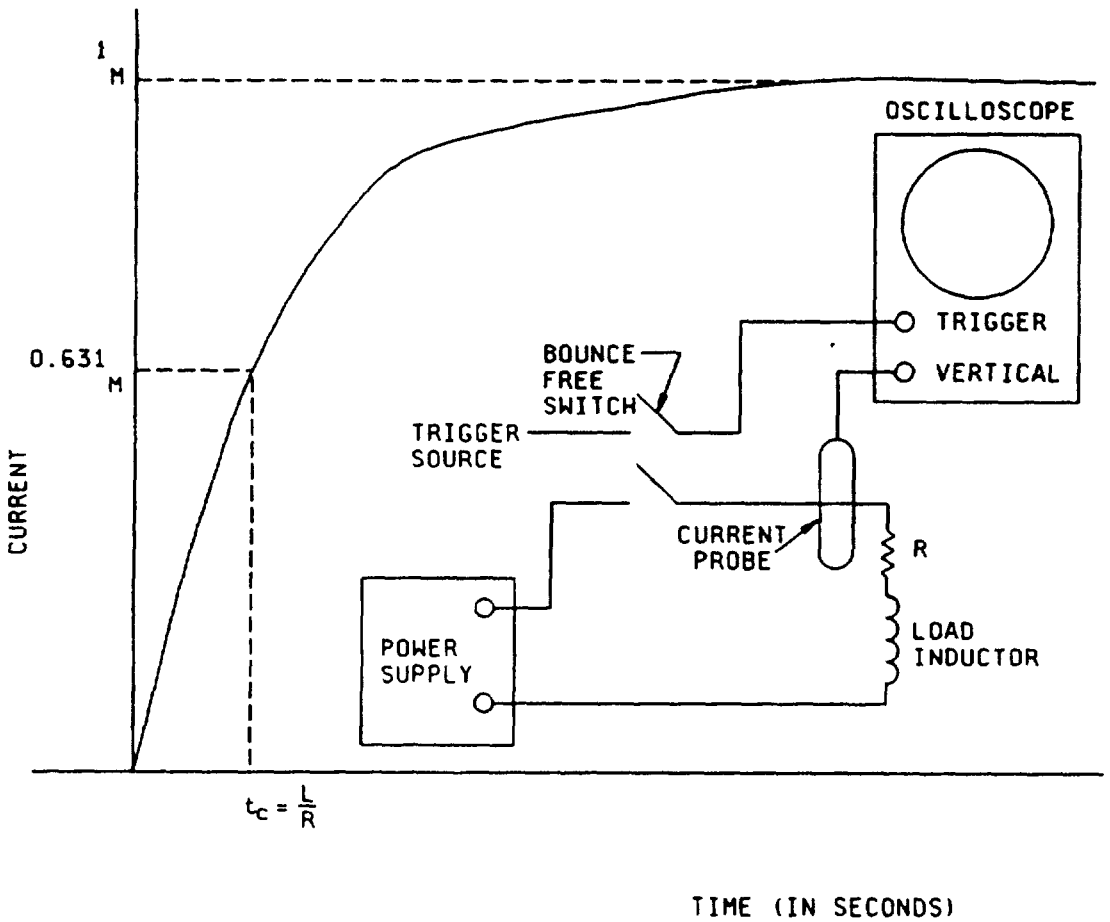

FIGURE 10. DC inductive load (inductive current rise time curve).

Downloaded from http://www.everyspec.com

4.8.19 Intermediate current (see 3.24). Intermediate current shall not be considered a low level or high level contact load rating (see 6.1.1). Relays shall be tested as specified in method 312 of MIL-STD-202. The following details and exceptions shall apply:

a. Maximum contact resistance: As specified in 3.24.

b. Coil circuit energizing voltage: Rated coil circuit supply voltage (see 3.1).

c. Cycling rate: 10 ±2 cycles per minute with minimum of 75 percent coil "on" time.

d. Contact current/voltage: 100 mA at 28 V dc.

e. Monitoring: At least 40 percent of the closed time of each contact during each operation shall be monitored for contact resistance.

f. Number of cycles: 50,000 cycles.

g. Ambient temperature: +125°C minimum.

4.8.20 Mechanical life (see 3.25). Relays shall be cycled one million cycles at room ambient temperature. The cycling rate shall be as specified in 4.8.18.4. Each contact load shall be 10 to 50 μA at 10 to 50 mV (dc or peak ac). The coil circuit shall be energized at rated voltage during 50 ±10 percent of each cycle. Mechanical life cycles shall not be used for failure rate determination or maintenance.

4.8.21 Resistance to solvents (see 3.26). Relays shall be tested in accordance with method 215 of MIL-STD-202 except temperature of solvents a, b, and d shall be maintained at +63°C to +70°C. The following details and exceptions shall apply:

a. Portion to be brushed. All marking.

b. Optional procedure for solvent d is not applicable.

c. Specimens to be tested: One sample shall be tested with each solvent solution. For qualification inspection, samples in excess of the available number of solvents shall be exempt from test. For group C testing, two additional samples shall be selected. The additional samples may be electrical rejects from group A2.

d. Examination: Specimens shall be examined for legibility of marking.

4.8.22 Voltage transients (see 3.27). Samples shall be subjected to the transient susceptibility tests as follows. Rated supply voltage shall be applied to the relay coil circuit. For a period of 60 seconds minimum at 10 ms ±1 ms intervals, repetitively superimpose on the input a voltage transient pulse with an amplitude as specified in 4.8.22a and 4.8.22b and a pulse duration of 100 μs ±0 μs. Rise/fall time of pulse leading edge shall be 1 μs maximum with overshoots not to exceed 5 percent. Contacts shall be monitored by an acceptable means approved by the qualifying activity. The contact loads shall be 10 mA maximum at 6 V dc maximum or peak ac. The pulse amplitude shall be as shown on figure 11.

a. Minimum turn-off voltage shall be applied. A series of transient voltage pulses with amplitude equal to the maximum control signal voltage, or an equivalent voltage to produce the maximum control signal current, as applicable, shall then be applied (see figure 11, configuration A). The relay contacts shall not change state.

b. Maximum turn-on voltage, or an equivalent voltage to produce the maximum turn-on current, as applicable, shall be applied A series of transient pulses with voltage amplitude equal to -2.0 V dc ±0.1 V dc shall then be applied (see figure 11, configuration B). For FET driven hybrid relays, a current limiting resistor may be used. The relay contacts shall not change state.

Downloaded from http://www.everyspec.com

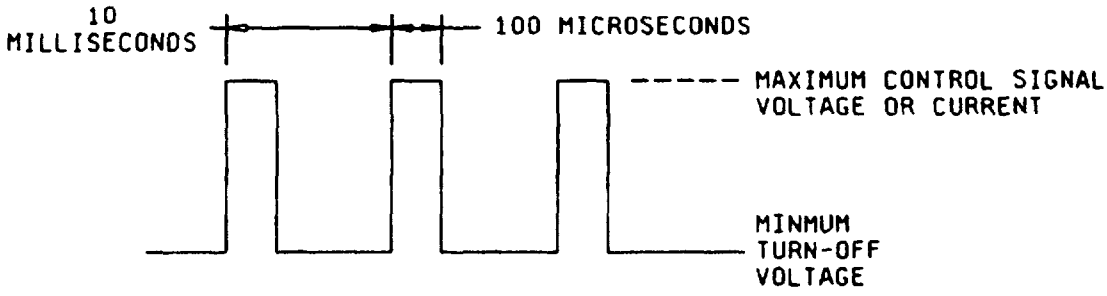

Configuration A

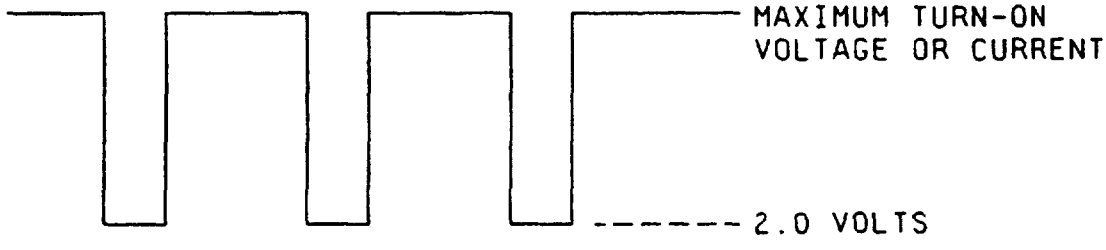

Configuration B

FIGURE 11 Voltage transients test waveforms

Downloaded from http://www.everyspec.com

5. PACKAGING

5.1 Preservation. Preservation shall be level A or C, as specified (see 6.2d).

5.1.1 Level A.

5.1.1.1 Cleaning. Relays shall be cleaned in accordance with MIL-P-116, process C-1 if necessary.

5.1.1.2 Drying. Relays shall be dried in accordance with MIL-P-116 if necessary.

5.1.1.3 Preservative application. Contact preservatives shall not be used.

5.1.1.4 Unit packs. Each relay shall be unit packed one each and protected in accordance with method III of MIL-P-116.

5.1.1.5 Intermediate containers. Intermediate container use shall be in accordance with MIL-STD-2073-1. The number of unit packs per intermediate container shall be determined by appendix B of MIL-STD-2073-1.

5.1.2 Level C. The level C preservation of relays shall conform to the MIL-STD-2073-1 requirements.

5.2 Packing. Packing shall be level A, B, or C, as specified (see 6.2).

5.2.1 Packing and unitization or palletization. Packing and unitization or palletization shall conform to the requirements of MIL-STD-2073-1 for the level cited. When the quantity of a stock numbered item being shipped level A to a single destination comprises a shipping container whose volume is less than 1 cubic foot (.02832 cubic meter) and weight is less than 25 pounds (11.3398 kilograms), packing shall be as specified for level B.

5.3 Marking. In addition to any special or other identification marking required by the contract (see 6.2e), each unit, intermediate and exterior container shall be marked in accordance with MIL-STD-129. The complete military or contractor's type or PIN, as applicable (including the CAGE), shall be marked on all unit and supplementary packs in accordance with the identification marking provisions of MIL-STD-129.

5.3.1 Civil agencies. When specified in the contract or order (see 6.2e), the marking of domestic shipments for civil agencies shall be in accordance with FED-STD-123.

5.3.2 Electrostatic discharge sensitive (ESDS) electronic devices. Unit intermediate, and exterior packs containing ESDS devices susceptible to damage from electric field forces (see MIL-HDBK-263 for definition of electric field) shall be marked in accordance with MIL-STD-129 requirements.

5.3.3 First article and quality conformance inspections. First article and quality conformance inspections and tests shall be required as specified in MIL-P-116.

5.4 Functional requirements.

5.4.1 Rough handling test (when specified, see 6.2). When packs have been tested in accordance with MIL-P-116, all material and components comprising each pack shall be free from damage or evidence of displacement which might affect the use of the preservation method or pack. The semiconductor devices and associated accessories within the tested packs shall show no visible signs of damage. When specified in the contract (see 6.2), functional tests in accordance with the group A inspection requirements of the commodity specification shall be conducted on those semiconductor devices subjected to the rough handling test to determine freedom from operational malfunction. The examination of the devices tested under this group A inspection shall be in accordance with the visual and mechanical inspection requirements specified in method 2071 of MIL-STD-750 or the commodity specification.

5.4.2 Leakage test (when applicable). When a barrier enclosed unit pack has been tested in accordance with MIL-P-116, there shall be no evidence of moisture within the unit pack.

5.4.3 Workmanship. The quality of workmanship shall assure acceptance of the completed preservation, packing, and marking requirements in accordance with the inspections specified in MIL-P-116.

5 5 Quality assurance provisions. Quality assurance and inspection requirements shall be in accordance with MIL-P-116.

Downloaded from http://www.everyspec.com

6. NOTES

(This section contains information of a general or explanatory nature that may be helpful, but is not mandatory.)

6.1 Intended use. Relays conforming to this specification are intended for use in electronic and communication equipment. Their principal areas of application are for aircraft, missiles, spacecraft and ground-support electronic and communication equipment. This does not preclude the use of these relays in other military applications. Consult MIL-STD-1346 for selection and application information.

CAUTION: The use of any coil voltage less than the rated coil voltage will compromise the operation of the relay.

6.1.1 Contact rating. The contact ratings of relays covered by this specification are based on load endurance tests which establish the relay capability to switch rated loads. For the purposes of this specification, contact load ratings are defined as follows:

a. Low level: 10 μA at 50 mV to 10 mA at 6 V.

b. Intermediate: 10 mA at 6 V to 100 mA at 28 V.

c. High level: Above 100 mA at 28 V.

6.1.2 Failure rate level. Failure rate level (percent per 10,000 cycles) as specified in table I, is based on an average of 10 cycles per hour, per application, for 1,000 hours in accordance with MIL-STD-690.

6.1.3 Packaging provisions. The preservation, packing, and marking specified herein are intended for direct shipments to the Government. However, at the option of the contractor or when so specified, the packaging provisions herein are also applicable for the preparation of relays for shipment from the parts contractor to the original equipment manufacturer.

6.2 Acquisition requirements. Acquisition documents must specify the following:

a. Title, number, and date of the specification.

b. Issue of DODISS to be cited in the solicitation, and if required, the specific issue of individual documents referenced (see 2.1).

c. Title, number, and date of the applicable specification sheet, and the PIN.

d. Levels of preservation and packing required (see 5.1 and 5.2).

e. Special or other identification marking requirements (see 5.3).

f. Marking requirements for failure rate level (see MIL-STD-690).

6.2.1 Manufacturer provided services. The manufacturer may provide the following optional value added services when specified in the purchase order:

a. Hot solder dipping of terminals (see 3.5.7).

b. Shortening of wire leads (see 3.5.7.2).

6.3 Qualification. With respect to products requiring qualification, awards will be made only for products which are, at the time of award of contract, qualified for inclusion in applicable Qualified Products List, QPL 39016, whether or not such products have actually been so listed by that date. The attention of the contractors is called to these requirements, and manufacturers are urged to arrange to have the products that they propose to offer to the Federal Government tested for qualification in order that they may be eligible to be awarded contracts or purchase orders for the products covered by this specification. The activity responsible for the QPL is the Defense Electronics Supply Center, ATTN: DESC-ELS, 1507 Wilmington Pike, Dayton, OH 45444. Application for qualification tests shall be made in accordance with provisions governing qualification SD-6 (see 6.3 1).

Downloaded from http://www.everyspec.com

6.3.1 Provisions Governing Qualification SD-6. Copies of "Provisions Governing Qualification SD-6" may be obtained upon application to the Standardization Documents Order Desk, Building 4D, 700 Robbins Avenue, Philadelphia, PA 19111-5094.

6.3.2 Qualification and maintenance by similarity. This information is for reference only. Refer to the individual specification sheets for detailed information.

6.3.2.1 Qualification by similarity. The graphic guide shown illustrates the relative complexity of individual specification sheets within a style group for use in determining qualification inspection (reduced testing) candidate specification sheets. Arrow direction indicates flow towards less complex designs. Asterisk indicates most complex design of style group.

TO-5, round pin pattern:

```
*/3 ---------> /4 ---------> /5
 |
 └---> /1
```

0.100 grid pin pattern:

```
*/7 ---------> /6
```

6.3.2.2 Maintenance by similarity. The data accumulated for the style groups listed below may be combined for group B and C inspections maintenance and extension of failure rate levels in accordance with MIL-STD-690. Testing samples must be representative of production. Maintenance plan is contingent upon qualifying activity approval. Failures exceeding the sampling plan selected (C = number), regardless of the specific specification sheet affected, affect all other specification sheets within the respective style group.

a. TO-5, round pin pattern: /1, /3, /4, /5.

b. 0.100, grid pin pattern: /6, /7.

6.4 Shelf life. Relays conforming to this specification should be designed for a minimum of 7 years shelf life, following which the relays should be satisfactory for intended use without further conditioning.

6.5 Sealing. The following procedure is suggested as a guide; however, every effort should be made to utilize the most effective procedure consistent with the state of the art.

a. Evacuate to less than 200 microns.

b. Heat to maximum rated ambient temperature with continued evacuation (see 3.1).

c. Maintain heat and vacuum for 12 hours or longer, continuing the treatment until a maximum pressure of 80 microns is reached.

d. Turn off heaters and maintain pressure for 4 hours.

e. Close evacuation valve and fill chamber with the desired pressurizing gas.

f. Seal relay before removing from chamber.

6.6 Intermetallic contact. The finishing of metallic areas to be placed in intimate contact by assembly presents a special problem, since intermetallic contact of dissimilar metals results in electrolytic couples which promote corrosion through galvanic action. To provide the required corrosion protection, intermetallic couples are restricted to those permitted by table IX. Table IX shows metals and alloys (or plates) by groups which have common electromotive forces (EMF) within 0.05 volt when coupled with a saturated calomel electrode in sea-water at room ambient temperatures. All members of a group are considered as completely compatible, one with the other. Compatible couples between groups have been specified in table IX based on a potential difference of 0.25 volt maximum. To simplify any arithmetic involved, table IX shows, in addition to EMF against a calomel electrode, a derived "anodic index" with group 1 (gold, etc.) as 0 and group 18 (magnesium, etc.) as 175 Subtraction of a lower group anodic index gives the EMF difference in hundredths of a volt.

Downloaded from http://www.everyspec.com

TABLE IX. Compatible couples (see 6.6). 1/

Group no.	Metallurgical category	EMF (volt)	Anodic index (0.01 V)	Compatible couples
1	Gold, solid and plated; gold-platinum alloys; wrought platinum (most cathodic)	+0.15	0	
2	Rhodium plated on silver-plated copper	+0.05	10	
3	Silver, solid or plated; high silver alloys	0	15	
4	Nickel, solid or plated; monel metal, high nickel-copper alloys	-0.15	30	
5	Copper, solid or plated; low brasses or bronzes; silver solder; German silver; high copper-nickel alloys; nickel-chromium alloys; austenitic corrosion-resistant steels	-0.20	35	
6	Commercial yellow brasses and bronzes	-0.25	40	
7	High brasses and bronzes, naval brass; Muntz metal	-0.30	45	
8	18 percent chromium type corrosion-resistant steels	-0.35	50	
9	Chromium, plated; tin, plated; 12 percent chromium type corrosion-resistant steels	-0.45	60	
10	Tin-plate; terneplate; tin-lead solder	-0.50	65	
11	Lead, solid or plated; high lead alloys	-0.55	70	
12	Aluminum, wrought alloys of the duralumin type	-0.60	75	
13	Iron, wrought, gray, or malleable; plain carbon and low alloy steels, armco iron	-0.70	85	
14	Aluminum, wrought alloys other than duralumin type; aluminum, case alloys of the silicon type	-0.75	90	
15	Aluminum, cast alloys other than silicon type; cadmium, plated and chromated	-0.80	95	
16	Hot-dip-zinc plate; galvanized steel	-1.05	120	
17	Zinc, wrought; zinc-base die-casting alloys; zinc, plated	-1.10	125	
18	Magnesium and magnesium-base alloys, cast or wrought (most anodic)	-1 60	175	

1/ Compatible couples - potential difference of 0 25 volt maximum between groups

Downloaded from http://www.everyspec.com

6.6.1 Groups. Table IX sets up 18 primary groups. It may be noted that neither the metallurgical similarity or dissimilarity of metals is the parameter for selection of compatible couples. All members within a group, regardless of metallurgical similarity, are considered inherently nonsusceptible to galvanic action, when coupled with any member within the group; for example, such dissimilar metals as platinum and gold. Similarly, such basically dissimilar alloys as austenitic stainless steel, silver-solder, and low brass (all members of group 5) are inherently nonsusceptible when coupled together.

6.6.2 Compatibility graphs. Permissible couple series are shown in table IX by the graphs at the right. Members of groups connected by lines will form permissible couples. A o indicates the most cathodic member of each series, a • an anodic member, and the arrow indicates the anodic direction.

6.6.3 Selection of compatible couples. Proper selection of metals in the design of equipment will result in fewer intermetallic contact problems. For example, for sheltered exposure, neither silver nor tin require protective finishes. However, since silver has an anodic index of 15 and tin 65, the EMF generated as a couple is 0.50 volt, which is not allowable by table IX. In this case, other metals of plates will be required. It should be noted that, in intermetallic couples, the member with the higher anodic index is anodic to the member with the lower anodic index and will be susceptible to corrosion in the presence of an electrolytic medium. If the surface area of the cathodic part is significantly greater than that of the anodic part, the corrosive attack on the contact area of the anodic part may be greatly intensified. Material selection for intermetallic contact parts, therefore, should establish the smaller part as the cathodic member of the couple, whenever practicable.

6.6.4 Plating. When base metals intended for intermetallic contact form couples not allowed by table IX, they are to be plated with those metals which will reduce the potential difference to that allowed by table IX.

6.6.4.1 Tin plated finishes. Use of tin plating is prohibited (see 3.4.4.1a). Use of tin finishes can result in tin whisker growth. Tin whisker growth can result in adverse effects on the operation of electronic equipment systems. For additional information on this matter, refer to ASTM B545-83 (Standard Specification for Electrodeposited Coating of Tin)."

6.7 Fixturing losses. It is known that there is inherent resistance in sockets, wiring, etc.. The qualifying activity will evaluate the manufacturer's system to determine conformance to specification requirements.

6.8 Glossary. The definitions listed below are not a complete glossary of relay terminology, but rather are intended as definitions of the technical terms as applied within the specification.

Adjunct sealant - Any hydrocarbon or silicone material used on the exterior of the unit to improve the hermeticity of a hermetically sealed relay.

Bifilar winding - Two or more windings with the wire of each winding alongside the other, matching turn for turn; may be either inductive or noninductive.

Bounce time - The interval between first make of the contact until the uncontrolled making and breaking of the contact ceases.

Chatter, contact - The undesired opening of mating contacts resulting from uncompensated ac operation, or from external shock and vibration.

Coil - One or more windings of a common form.

Contacts - The current-carrying parts of a relay that open or close electrical circuits.

Contact, bifurcated - A forked or branched, contacting member so formed or arranged, as to provide dual contacting.

Contact, closed - A normally-closed contact with the relay released is a closed contact. A normally-open contact with the relay operated is a closed contact.

Contact, open - A normally-closed contact with the relay operated is an open contact. A normally-open contact with the relay released is an open contact.

Downloaded from http://www.everyspec.com

Contact arrangement - The combination of contact forms that make up the entire relay switching structure.

Contact bounce - Intermittent opening of contacts after initial closure due to contact impact.

Contact force - The force exerted by a movable contact against a mating contact when the contacts are closed.

Contact gap - The distance between a pair of mating relay contacts when the contacts are open.

Contact weld - A contact failure due to fusing of closed contacts, resulting in their failure to open.

Control signal - A voltage or current applied to the relay input and used to control (turn-on and turn-off) the hybrid relay.

Current or voltage, rated coil supply - The coil current or voltage at which the relay is to operate and meet all specified electrical, mechanical, and environmental requirements.

Cycle, relay - A relay cycle is defined as a relay pickup and dropout, (one opening and one closure of a set of contacts). Therefore, a cycle consists of two operations.

Degassing - A process of thermally cleaning a relay (at elevated temperatures) to drive off harmful gasses. Degassing is usually performed using vacuum pumps.

Dropout current or voltage - The current or voltage by which the last contact shall have returned to the unenergized position.

Hermetically sealed relay - A relay contained within an enclosure that is sealed by fusion to insure a low rate of gas leakage. This usually refers to metal-to-metal, or metal-to-glass sealing.

Hold current or voltage - Hold current or voltage is the current or voltage at or above which:

a. The armature shall not move from its operated position, or

b. The normally-open contacts shall not open; the normally-closed contacts shall not close.

Caution note: The use of any coil current or voltage less than the rated current or voltage will compromise the operation of the device.

Input - The circuitry within a relay which responds to control signal and causes the relay to turn on (equivalent to "coil" or "winding" in an electromechanical relay).

Miss - Failure to establish the intended circuit conditions (high or low output resistance, as applicable).

Nonoperating current or voltage - The maximum coil current or voltage at which a relay remains in the deenergized condition.

Normally closed contacts - Those contacts that are closed with the relay de-energized.

Normally open contacts - Those contacts that are open with the relay de-energized.

Operation, relay - A relay operation is defined as when a relay changes from an initial condition to the prescribed condition. For example, normally open to closed or vice versa. Therefore, a relay operation is one-half of a cycle.

Output - The circuit within a relay which controls an external load circuit and is changed from a conducting to a nonconducting state (and vice versa) by the relay operation.

Pickup current or voltage - The current or voltage at which the last normally-open contact closes.

Relay - Most simply defined as an electrically-controlled device that opens and closes electrical contacts to effect the operation of other devices in the same or another electrical circuit.

Downloaded from http://www.everyspec.com

Saturation - The condition attained in a magnetic material when an increase in magnetizing (coil) current produces no appreciable increase in flux.

Shelf life - A period of time a relay can be stored unused before detrimental changes occur which would cause the item not to properly perform its function within the requirements of this specification.

Silicone - Any of a group of semi-inorganic polymers based on the structural unit R_2 SiO, where R is an organic group, characterized by wide range thermal stability, high lubricity, extreme water repellency, and physicochemical inertness, used in adhesives, lubricants, protective coatings, paints, electrical insulation, synthetic rubber, and prosthetic replacements for bodily parts.

Supply voltage - The voltage source that supplies power to drive the relay coil. It may also be used to supply standby power to the solid state circuitry.

Time, contact bounce - The time interval from initial closure of a contact to the end of bounce during pickup, and dropout.

Time, operate - The time interval from coil energization to initial closure of the last open contact. Unless otherwise stated, it does not include contact bounce time.

Time, release - The time interval from coil de-energization to initial closure of the last open contact. Unless otherwise stated, it does not include bounce time.

Time, transfer - The time interval between the opening of the closed contact and the closing of the open contact of a break-make-contact combination. For multipole relays, transfer time is defined as the interval between the opening of the last closed contact and the closing of the first open contact of any set.

Time, turn-on - The interval between the application of control signal and the output reaching 90 percent of its ultimate change in voltage when the relay is turned on.

Time, turn-off - The interval between the removal of control signal and the output reaching 90 percent of its ultimate change in voltage when the relay is turned off.

Turn-on - The change in relay condition caused by the control signal exceeding a predetermined (minimum turn-on voltage) resulting in the output changing from a nonconducting to a conducting state (or vice versa) (equivalent to "energize", "operate", or "pick-up" in an electromechanical relay).

Turn-off - The reversion of the relay from the operated (turn-on) to unoperated (turn-off) state as a result of control signal being below a predetermined (maximum turn-off voltage) value (equivalent to "drop-out", "deenergize", or "release" in an electromechanical relay).

Voltage, rated coil supply - The coil supply voltage at which the relay is to operate and meet all specified electrical, mechanical and environmental requirements.

6.9 Subject term (key word) listing.

Hermetically sealed
Low level contact rating
Spreader pad
TO-5
Transistor driven
Turn-on time

6.10 Changes from previous issue. Marginal notations are not used in this revision to identify changes with respect to the previous issue due to the extensiveness of the changes.

Downloaded from http://www.everyspec.com

CONCLUDING MATERIAL

Custodians:
Army - ER
Navy - EC
Air Force - 85

Review activities:
Army - AR, ME, MI
Navy - AS, OS, SH
Air Force - 17, 19

Preparing activity:
DLA - ES

(Project 5945-0878-02)

Downloaded from http://www.everyspec.com

STANDARDIZATION DOCUMENT IMPROVEMENT PROPOSAL

INSTRUCTIONS

1. The preparing activity must complete blocks 1, 2, 3, and 8. In block 1, both the document number and revision letter should be given.

2. The submitter of this form must complete blocks 4, 5, 6, and 7.

3. The preparing activity must provide a reply within 30 days from receipt of the form.

NOTE: This form may not be used to request copies of documents, nor to request waivers, or clarification of requirements on current contracts. Comments submitted on this form do not constitute or imply authorization to waive any portion of the referenced document(s) or to amend contractual requirements.

I RECOMMEND A CHANGE:	1. DOCUMENT NUMBER MIL-R-28776C	2. DOCUMENT DATE (YYMMDD)

3. DOCUMENT TITLE

RELAYS, HYBRID, ESTABLISHED RELIABILITY, GENERAL SPECIFICATION FOR

4. NATURE OF CHANGE (Identify paragraph number and include proposed rewrite, if possible. Attach extra sheets as needed.)

5. REASON FOR RECOMMENDATION

6. SUBMITTER

a. NAME (Last, First, Middle initial)	b. ORGANIZATION	
c. ADDRESS (Include Zip Code)	d. TELEPHONE (Include Area Code) (1) Commercial (2) AUTOVON	7. DATE SUBMITTED (YYMMDD)

8. PREPARING ACTIVITY

a. NAME Commander Defense Electronics Supply Center ATTN: DESC-ELD	b. TELEPHONE (Include Area Code) (1) Commercial 513-296-6184 (2) AUTOVON 986-6184
c. ADDRESS (Include Zip Code) 1507 Wilmington Pike Dayton, OH 45444-5765	IF YOU DO NOT RECEIVE A REPLY WITHIN 45 DAYS, CONTACT: Defense Quality and Standardization Office 5203 Leesburg Pike, Suite 1403, Falls Church, VA 22041-3466 Telephone (703) 756-2340 AUTOVON 289-2340