Downloaded from http://www.everyspec.com

INCH-POUND
MIL-PRF-25961H
w/AMENDMENT 1
31 MAY 2011
SUPERSEDING
MIL-PRF-25961H
23 APRIL 2008

PERFORMANCE SPECIFICATION

VALVE, FILL-BUILDUP-VENT, LIQUID OXYGEN CONVERTER, CRU-50/A

This specification is approved for use by all Departments and Agencies of the Department of Defense.

1. SCOPE.

1.1 Description. This specification covers one type of liquid oxygen converter fill-buildup-vent valve for use in 70 and 300 pounds per square inch gage (psig) liquid oxygen (LOX) systems in aircraft. The valve is designated CRU-50/A.

2. APPLICABLE DOCUMENTS.

2.1 General. The documents listed in this section are cited in sections 3, 4, or 5 of this specification. This section does not include documents cited in other sections of this specification or recommended for additional information or as examples. While every effort has been made to ensure the completeness of these lists, document users are cautioned that they must meet the requirements specified in the documents cited in sections 3, 4, or 5 of this specification, whether or not they are listed.

2.2 Government documents.

2.2.1 Specifications and standard. The following specifications and standards form a part of this document to the extent specified herein. Unless otherwise specified, the issues of these documents are those cited in the solicitation or contract.

Comments, suggestions, or questions on this document should be addressed to Oklahoma City Air Logistics Center/ENSDAA, 3001 Staff Drive, Suite 1AB81A, Tinker AFB, OK 73145 or emailed to af71@tinker.af.mil. Since contact information can change, you may want to verify the currency of this address information using the ASSIST Online database at https://assist.daps.dla.mil.

AMSC N/A FSC 4820
DISTRIBUTION STATEMENT A. Approved for public release; distribution is unlimited.

Downloaded from http://www.everyspec.com

COMMERCIAL ITEM DESCRIPTIONS

A-A-59503 - Nitrogen, Technical

DEPARTMENT OF DEFENSE SPECIFICATIONS

MIL-PRF -38201 - Valve, Filler, Liquid Oxygen, Female CRU-59/E
MS27566 - Cap Assembly, Liquid Oxygen Fill Valve

(Copies of these documents are available online at https://assist.daps.dla.mil/quicksearch/ or from the Standardization Documents Order Desk, 700 Robbins Avenue, Building 4D, Philadelphia, PA 19111-5094.)

2.2.2 Non-Government publications. The following documents form a part of this document to the extent specified herein. Unless specified, the issues of these documents are those cited in the solicitation or contract.

SAE INTERNATIONAL

SAE-AS8010 - Aviator's Breathing Oxygen Purity Standard

(SAE documents may be obtained online at www.sae.org or from SAE World Headquarters, 400 Commonwealth Drive, Warrendale, PA 15096-0001 USA.)

ASME INTERNATIONAL

ASME B1.20.1 - Pipe Threads, General Purpose (Inch)
ASME B46.1 - Surface Texture (Surface Roughness, Waviness, and Lay)

(ASME documents may be obtained online at http://www.asme.org/ or from ASME International, Three Park Avenue, New York, 10016-5990, USA.)

AMERICAN SOCIETY FOR QUALITY (ASQ)

ANSI/ASQ Z1.4 - Procedures, Sampling And Tables For Inspection by Attributes

(ASQ documents may be obtained online at http://www.asq.org or from American Society for Quality, P.O. Box 3005, Milwaukee, WI 53201-3005 or 600 North Plankinton Avenue, Milwaukee, WI 53203, USA.)

ASTM INTERNATIONAL

ASTM D2512 - Standard Test Method for Compatibility of Materials with Liquid Oxygen (Impact Sensitivity Threshold and Pass-Fail Techniques)

Downloaded from http://www.everyspec.com

ASTM B117 - Salt Spray (Fog) Testing Apparatus, Operating

(ASTM documents may be obtained online at http://www.astm.org/ or from American Society for Testing and Materials, 100 Barr Harbor Drive, West Conshohocken, PA 19428-2959.)

2.3 Order of precedence. Unless otherwise noted herein or in the contract, in the event of a conflict between the text of this document and the references cited herein, (except for related specification sheets), the text of this document takes precedence. Nothing in this document, however, supersedes applicable laws and regulations unless a specific exemption has been obtained.

3. REQUIREMENTS.

3.1 Qualification. The valve furnished under this specification shall be the product that is authorized by the qualifying activity for listing on the applicable qualified products list before contract award (see 4.1 and 6.3).

3.2 Recycled, recovered, or environmentally preferable materials. Recycled, recovered, or environmentally preferable materials should be used to the maximum extent possible provided that the material meets or exceeds the operational and maintenance requirements, and promote economically advantageous life cycle cost.

3.3 Workmanship. The valve, including all parts, shall be constructed in accordance with commonly accepted industrial workmanship standards.

3.4 Materials. All materials shall be corrosion resistant or suitably treated to resist corrosion due to electrolytic decomposition, salt air, and any other atmospheric condition that may be encountered during operational use or storage. Materials shall be compatible with LOX at -297°F.

3.4.1 Nonmetallic Materials. Unless otherwise specified, all nonmetallic materials shall be tested in accordance with ASTM D 2512 and shall demonstrate no reaction when subjected to 98 J impact energy. For additional guidance selecting nonmetallic materials for LOX usage see 6.5.

3.5 Interface.

3.5.1 Dimensions. The dimensions of the valve shall conform to Figures 1 through 5.

3.5.2 Cap. The fill inlet port shall have a cap conforming to MS27566.

3.5.3 Filler valve CRU-59/E. The CRU-50/A valve shall have a fill inlet port that mates with a CRU-59/E valve as specified in MIL-PRF-38201 (see Figure 5).

3.5.4 Threads. All pipe threads shall conform to ASME B1.20.1.

3.6 Environmental conditions. The valve shall operate in the following conditions:

Downloaded from http://www.everyspec.com

a. Temperature: -65° to 260°F.

b. Vibration: An acceleration power spectral density (APSD) of 0.04 g^2/Hz from 15 to50 Hz, and then an increase at a rate of ± 4 dB per octave 300Hz. Also, an APSD of 0.3 g^2/Hz from 300 to 1,000 Hz, and then a decrease at a rate 6 dB per octave to 2,000 Hz.

3.7 Performance.

3.7.1 General. The valve shall be automatic type that controls liquid and gaseous oxygen flow during filling and operation of LOX converters in the fill, vent, and buildup circuits of 70 and 300 psig LOX systems.

3.7.2 Operating positions. The valve shall have two operating positions: buildup (closed) and fill-vent (open). When the CRU-59/E valve is disconnected, or connected but not rotated to full engagement, the CRU-50/A valve shall be in the buildup position. When the CRU-59/E valve is connected and rotated clockwise to full engagement, the CRU-50/A valve shall be in the fill-vent position. The required flow patterns for each position are shown in Figure 6.

3.7.3 Cleanliness. All surfaces shall be free of visible particulates (50 microns and larger), free of visible fluorinated lubricants, and free of hydrocarbon contamination to a level not greater than 3 milligrams per square foot (mg/ft^2) (see 6.6).

3.7.4 Fill check element. The fill check element in the fill outlet port shall prevent a reverse flow through the fill inlet port in excess of 0.25 standard liter per minute (SLPM) (see 6.4) when a pressure of 70 psig is applied to the fill outlet port and the CRU-59/E valve in fully engaged.

3.7.5 Leakage.

3.7.5.1 Fill inlet port and vent port back pressure leakage. Leakage from the fill inlet and vent ports shall not exceed 0.02 and 0.04 SLPM, respectively, when the gas port is plugged, the cap is removed from the fill inlet port, and pressures of 10 inches of water, 70 psig, and 300 psig are applied to the fill outlet and the buildup ports.

3.7.5.2 Gas port leakage. The leakage from the gas port shall not exceed 0.25 SLPM when the vent and fill outlet ports are plugged and a pressure of 30 psig is applied to the buildup port and through the CRU-59/E valve into the fill inlet port.

3.7.5.3 Mating valve leakage. The CRU-50/A valve shall not leak LOX when fully engaged with the CRU-59/E valve.

3.7.6 Flow rate.

3.7.6.1 Fill cycle flow rate. When the valve is in the fill-vent position and there is a gas flow of 40 SLPM, the pressure drop shall not exceed 2.4 psig.

Downloaded from http://www.everyspec.com

3.7.6.2 Vent cycle flow rate. The gaseous oxygen flow from the vent port shall be a minimum of 70 SLPM when a CRU-59/E valve is connected to the fill inlet port and a pressure of 34 inches of water is applied to the gas port.

3.7.6.3 Buildup cycle flow rate. The gaseous oxygen flow from the gas port shall be a minimum of 40 SLPM with a pressure of 21 inches of water applied to the buildup port.

3.7.7 Pressure.

3.7.7.1 Proof pressure. The valve shall withstand a proof pressure of 500 psig.

3.7.7.2 Actuation pressure. The valve shall actuate with a maximum internal pressure of 350 psig.

3.7.8 Orientation. The valve shall operate in any orientation.

3.7.9 Opening force. When the valve is pressurized to 350 psig, the force applied to the valve stem to actuate the valve from the buildup to the fill-vent position shall not exceed 50 pounds.

3.7.10 Weight. The valve weight shall not exceed 1.25 pounds.

3.7.11 Reliability. The valve shall have a mean cycle between failures (MCBF) of 200 cycles.

3.7.12 Venting endurance. The valve shall withstand 200 vent cap (see 6.10) installation and removal cycles with a minimum system pressure of 50 psig without leakage.

3.8 Item identification. The valve shall be marked with the following information:

a. Manufacturer's name
b. Manufacturer's CAGE code
c. Manufacturer's part number (PN)
d. Manufacturer's lot number
e. CRU-50/A
f. MIL-PRF-25961

3.8.1 Port identification. The port locations shall be marked (see Figure 2).

3.9 Interchangeability. All parts having the same manufacturer's part number shall be functionally and dimensionally interchangeable.

3.10 Toxic chemical, hazardous substances, and ozone depleting chemicals (ODCs). The use of toxic chemicals, hazardous substances or ODCs shall be avoided, whenever feasible.

Downloaded from http://www.everyspec.com

4. VERIFICATION.

4.1 Classification of inspections. The inspection requirements specified herein are classified as follows:

a. Qualification (see 4.2).

b. Conformance inspection (see 4.3).

4.2 Qualification inspection. Qualification inspection shall be performed on a minimum of two valves and shall include all the tests and examinations in 4.6.

4.2.1 Verification inspection. When required by the procuring activity (see 6.2), verification inspection shall be performed on two valves and shall include all the tests and examinations in 4.3 and in 4.6.14 and 4.6.17. Verification inspection shall be performed when a qualified manufacturer has not produced a CRU-50A valve for three years or there has been a change in manufacture's design, materials, or procedures.

4.3 Conformance inspection. Conformance inspection shall include the tests in 4.3.1 and 4.3.2.

4.3.1 Individual tests. Each valve shall be subjected to the tests below.

a. Visual examination (see 4.6.1).
b. Cleanliness (see 4.6.2).
c. Fill check element leakage (see 4.6.3).
d. Fill inlet port and vent port back pressure leakage (see 4.6.4).
e. Gas port leakage (see 4.6.5).

4.3.2 Sample tests. In addition to the tests indicated in 4.3.1, valves shall be sample inspected based on ANSI/ASQ Z1.4 (see 6.7 for guidance). A sample of valves shall be subjected to the following examinations and tests and shall not be used as deliverable items.

a. Visual examination (dimensional only) (see 4.6.1).
b. Fill cycle flow rate (see 4.6.7).
c. Vent cycle flow rate (see 4.6.8).
d. Buildup cycle flow rate (see 4.6.9).
e. Functional test (see 4.6.13).
f. Proof pressure (see 4.6.15).

4.4 Inspection condition.

4.4.1 Temperature and pressure. Unless otherwise specified, tests shall be conducted at ambient temperature and pressure.

4.4.2 Female filler valve. A CRU-59/E valve shall be used in testing.

Downloaded from http://www.everyspec.com

4.4.3 Oxygen. All tests requiring LOX shall use oxygen conforming to SAE AS 8010, Type II, or nitrogen in accordance with A-A-59503, Type II, Class I, Grade B. Testing requiring gases shall use oxygen in accordance with SAE AS 8010, Type I, or nitrogen in accordance with A-A-59503, Type I, Class I, Grade B.

4.5 Requirements cross-reference matrix. Table I provides a cross-reference matrix of the section 3 requirements tested or verified in the paragraphs below.

TABLE I. Requirements cross-reference matrix.

Requirements	Verification	Requirements	Verification
3.1	4.2	3.7.5.2	4.6.5
3.3	4.6.1	3.7.5.3	4.6.6
3.4	4.6.1, 4.6.13,.4.6.19	3.7.6.1	4.6.7
3.4.1	4.6.1, 4.6.20	3.7.6.2	4.6.8
3.5.1	4.6.1	3.7.6.3	4.6.9
3.5.2	4.6.1	3.7.7.1	4.6.15
3.5.3	4.6.1, 4.6.13	3.7.7.2	4.6.13.3
3.5.4	4.6.1	3.7.8	4.6.12
3.6	4.6.10, 4.6.11, 4.6.16	3.7.9	4.6.14
3.7.1	4.6.13	3.7.10	4.6.1
3.7.2	4.6.13	3.7.11	4.6.17
3.7.3	4.6.2	3.7.12	4.6.18
3.7.4	4.6.1, 4.6.3	3.8	4.6.1
3.7.5.1	4.6.4		

4.6 Tests.

4.6.1 Examination of product. Each valve shall be inspected to determine conformance to workmanship, weight, port locations, thread size, dimensions, fill check element, fittings, materials, cap requirements, and item identification.

4.6.2 Cleanliness. Cleanliness of the surfaces shall be demonstrated by industrially accepted methods and shall meet the requirements specified (see 3.7.3). These cleaning and verification methods shall be identified (see 6.2 and 6.6).

4.6.3 Fill check element leakage. A pressure of 70 psig shall be applied to the fill outlet port of the CRU-50/A valve. A CRU-59/E valve shall be connected to the fill inlet port of the CRU-50/A valve. While maintaining 70 psig, the reverse flow through the CRU-59/A valve shall not exceed 0.25 SLPM.

4.6.4 Fill inlet port and vent port back pressure leakage. The gas port shall be plugged and the cap shall be removed from the fill inlet port. Pressures of 10 inches of water, 70 psig, and 300 psig shall be applied in steps for a minimum of 2 minutes each to the fill outlet and buildup ports.

Downloaded from http://www.everyspec.com

While maintaining the specified pressures at each step, the leakage from the fill inlet and vent ports shall not exceed 0.02 and 0.04 SLPM, respectively.

4.6.5 Gas port leakage. A CRU-59/E valve shall be connected to the fill inlet port of the CRU-50/A valve. Then the vent and fill outlet ports shall be plugged. A pressure of 30 psig shall be applied for a minimum of 2 minutes to the buildup port and through the CRU-59/E valve into the fill inlet port. While maintaining 30 psig, the leakage from the gas port shall not exceed 0.25 SLPM.

4.6.6 Mating valve leakage. A CRU-59/E valve shall be connected to the fill inlet port of a rigidly mounted CRU-50/A valve. With a constant 30 psig flow of LOX being maintained through the valves, the following tests shall be performed. First, a force of 13-pounds shall be applied at the rear (hose connection) of the CRU-59/E valve in a direction perpendicular to the charging hose (major axis of the valve) in all four 90° quadrants. Next, a force of 13-pounds then shall be applied at the rear (hose connection) of the CRU-59/E valve in line with the charging hose to establish a pull on the mating valve surfaces. No LOX leakage shall occur from the CRU-50/A valve.

4.6.7 Fill cycle flow rate. The pressure drop through the CRU-59/E valve, as installed on a test apparatus, shall be measured at a flow of 40 SLPM with the fill poppet stem held depressed. The CRU-50/A valve shall be mated with the CRU-59/E valve, and the pressure drop shall be measured at the same specified flow from the fill outlet port. The difference in pressure drop shall not exceed 2.4 psig.

4.6.8 Vent cycle flow rate. A CRU-59/E valve shall be connected to the fill inlet port and a pressure of 34 inches of water shall be applied to the gas port. The flow from the vent port shall be a minimum of 70 SLPM.

4.6.9 Buildup cycle flow rate. A pressure of 21 inches of water shall be applied to the buildup port. The flow from the gas port shall be a minimum of 40 SLPM.

4.6.10 High temperature exposure. The valve shall be exposed to 260° ± 2°F for a minimum of 4 hours. The valve then shall be subjected to tests in 4.6.3 through 4.6.5.

4.6.11 Low temperature exposure. The valve shall be exposed to -65° ± 2°F for a minimum of 4 hours. The valve then shall be subjected to tests in 4.6.3 through 4.6.5.

4.6.12 Orientation. The valve shall be subjected to tests in 4.6.3 through 4.6.5, and 4.6.7 through 4.6.9 while the valve is in each of the following orientations: major axis vertical with the fill inlet port at the bottom, major axis horizontal with the fill outlet port up, and major axis horizontal with the fill outlet port down.

4.6.13 Functional test.

4.6.13.1 Functional test setup. The CRU-50/A valve shall be set up to simulate installation on a LOX converter and be capable of being filled with LOX from a 30 psig source through a CRU-

Downloaded from http://www.everyspec.com

59/E valve. The setup shall be also capable of holding and flowing LOX from the fill outlet to the gas port, and of supplying gaseous oxygen to the fill outlet, gas, and buildup ports at 350 psig. In addition, when gaseous oxygen is applied to the setup, liquid oxygen shall be forced toward the fill outlet port.

4.6.13.2 Functional test process. Filling shall be simulated by performing the filling cycle as specified in 4.6.13.3. When the fill process is complete, pressurize the CRU-50/A valve again to 350 psig and then connect another CRU-59/E valve to the CRU-50/A valve. The CRU-50/A valve shall vent and there shall be no visible LOX leakage through the CRU-59/E valve. Remove the CRU59/E valve, repeat 4.6.13.3, and then perform the test in 4.6.6 during LOX transfer. After the final LOX transfer and the temperature is stabilized between -65° and 32°F, the valve shall be subjected to the test in 4.6.4. There shall be no malfunction preventing the repetition of normal filling cycles or resulting in liquid oxygen leakage.

4.6.13.3 Filling cycle. The CRU-50/A valve shall be pressurized to 350 psig through the fill outlet, gas, and buildup ports of the valve. With the flow off, the CRU-59/E valve in 4.6.13.1 shall be connected. This will cause the CRU-50/A valve to actuate from the buildup to the fill-vent position. Venting shall occur from the CRU-50/A vent port. The flow shall be turned on and the LOX shall flow through the valves until LOX emerges from the vent port. The CRU-59/E valve then shall be disconnected.

4.6.14 Opening force. The valve shall be connected in the setup as specified in 4.6.13.1 and pressurized to 350 psig. A push scale, or any other suitable device that can interface with the poppet assembly, shall be used to apply and measure the level of a gradually increasing force that is required to actuate the valve to the fill-vent position. The force required to actuate the valve and initiate venting shall not exceed 50 pounds.

4.6.15 Proof pressure. With the gas port plugged, a pressure of 500 psig shall be applied to the fill outlet and buildup ports for a minimum of 2 minutes. The valve then shall be inspected for permanent deformation and material damage and subjected to the tests in 4.6.3 through 4.6.5.

4.6.16 Vibration. The valve shall be mounted rigidly by its mounting provisions on the vibration table and then exposed to random vibration for 1 hour along each axis. The APSD shall be $0.04g^2$/Hz from 15 to 50 Hz and then increased at a rate of ±4 dB per octave to 300 Hz. Next the APSD shall be $0.3g^2$/Hz from 300 to 1,000 Hz and then decreased at a rate of 6 dB per octave to 2,000 Hz. For half the test time, along each axis and with the gas port capped, the valve shall have 70 to 90 psig applied to the fill outlet and buildup ports. The valve shall meet the leakage limits specified in 4.6.3 through 4.6.5 while being vibrated along each of the three axis (see 6.8).

4.6.17 Reliability. When required (see 6.2), perform a reliability test. With the valve connected as specified in 4.6.13.1, the filling cycle in 4.6.13.3 shall be conducted with sufficient duration to obtain a 90% confidence that an MCBF of 200 cycles has been achieved. The test also may be used to demonstrate an MCBF of 133 cycles and 99.5% probability of completing a one-cycle mission. At the conclusion of the reliability testing, the valve shall be subjected to the tests in 4.6.3 through 4.6.5. There shall be no malfunction preventing the repetition of normal filling cycles or LOX leakage exceeding maximum limits.

Downloaded from http://www.everyspec.com

4.6.18 Venting endurance. The CRU-50/A valve shall be connected as specified in 4.6.13.1 and the fill outlet, gas, and buildup ports shall be pressurized to 50 psig. The vent cap (see 6.10) shall be installed and removed 200 cycles while allowing for venting and repressurizing the system to 50 psig. When cycling is complete, the valve shall be subjected to the tests in 4.6.4 and 4.6.6. There shall be no LOX leakage exceeding maximum limits.

4.6.19 Corrosion. The valve, with the ports plugged, shall be subjected to a 50 hour salt fog test specified in ASTM B117. The valve then shall be examined for corrosion and internal contamination and subjected to the tests in 4.6.3, 4.6.4, and 4.6.5. Material certification may be used to demonstrate compliance with the requirement in 3.4.

4.6.20 Compatibility. Nonmetallic materials when tested using ASTM D 2512 shall demonstrate no reaction when subjected to 98 J impact energy (see 6.5). Material certification may be used to demonstrate compliance.

5. PACKAGING.

5.1 Packaging. For acquisition purposes, the packaging requirements shall be as specified in the contract or order (see 6.2). When packaging of materiel is to be performed by DoD or in-house contractor personnel, these personnel need to contact the responsible packaging activity to ascertain packaging requirements. Packaging requirements are maintained by the Inventory Control Point's packaging activities within the Military Service or Defense Agency, or within the military service's system commands. Packaging data retrieval is available from the managing Military Department's or Defense Agency's automated packaging files, CD-ROM products, or by contacting the responsible packaging activity.

6. NOTES.

(This section contains information of a general or explanatory nature that may be helpful, but is not mandatory.)

6.1 Intended use. The valve covered by this specification is used to control the flow of gaseous oxygen in the pressure buildup and vent circuits and the flow of LOX in the fill circuit of oxygen converter systems of 70 and 300 psig operating pressure.

6.2 Acquisition requirements. Acquisition documents should specify the following:

a. Title, number, and date of this specification.
b. Item identification
c. When reliability testing is required (see 4.6.17).
d. The requirement for the vendor to identify proposed cleaning and verification methods (see 4.6.2).
e. Packaging requirements (see 5 and 6.9).
f. When verification inspection is required (see 4.2.1).

Downloaded from http://www.everyspec.com

6.3 Qualification. The attention of the contractors is called to the requirements with respect to products requiring qualification. Award will be made only for products which are, at the time of award of contract, qualified for inclusion in the Qualified Products List (QPL No. 25961) whether or not such products have actually been listed by that date. In order that the manufacturers may be eligible to be awarded contracts or purchase orders for the products covered by this specification, they are urged to arrange to have the products that they propose to offer to the Federal Government tested for qualification. Information pertaining to qualification of products may be obtained from Oklahoma City Air Logistics Center/ENEP, 3001 Staff Drive, Suite 2AG-68A, Tinker AFB, OK 73145-3036.

6.4 SLPM. One SLPM is equal to one liter flow at a pressure of 760 millimeter of Mercury at the temperature of 0° Celsius per one minute.

6.5 Nonmetallic materials. For additional guidance selecting nonmetallic materials for use with LOX see ASTM G63. A proven nonmetallic material for usage with LOX is polytetrafluoroethyene (Teflon). Materials that are pre-certified to meet the 98 J threshold of ASTM D 2512 do not require demonstration.

6.6 Cleaning. See MIL-STD-1330 and SAE-ARP 1176 for guidance on proven cleaning methods and verifications. Visible inspections are typically conducted using white light and ultraviolet light to detect particulates and some types of hydrocarbons. The non-volatile residue test in MIL-STD-1359 may be used to baseline the hydrocarbon verification at an acceptable contamination level, however, other cleaning and verification methods that do not contain class I and II ODC solvents should be used for production.

6.7 Sampling. For sampling guidance see Table II.

TABLE II. Sample guidance.

Lot Size	Sample Size
1-15	2
16-25	3
26-90	5
91-150	8
151-500	20

6.8 Vibration. For vibration guidance see MIL-STD-810, test method 514. 5, procedure I,

6.9 Packaging. The valve will be packaged in such a way to protect and maintain the internal and external cleanliness requirements as specified in 3.7.4. Also the openings of the valve will be plugged to prevent thread damage.

6.10 Vent cap. Essex part number 50C-0020-1 or equivalent vent cap may be used to perform test specified in 4.6.18. Vent cap must interface with the slots on the CRU-50/A valve and cause it to vent when rotated to full engagement.

Downloaded from http://www.everyspec.com

6.11 Subject term (key words) listing.

Breathing oxygen
CRU-59/E
LOX
70 psig system
300 psig system

6.12 Changes from previous issue. The margins of this specification are marked with vertical lines to indicate modifications generated by this amendment. This was done as a convenience only and the Government assumes no liability whatsoever for any inaccuracies in these notations. Bidders and contractors are cautioned to evaluate the requirements of this document based on the entire content irrespective of the marginal notations.

Downloaded from http://www.everyspec.com

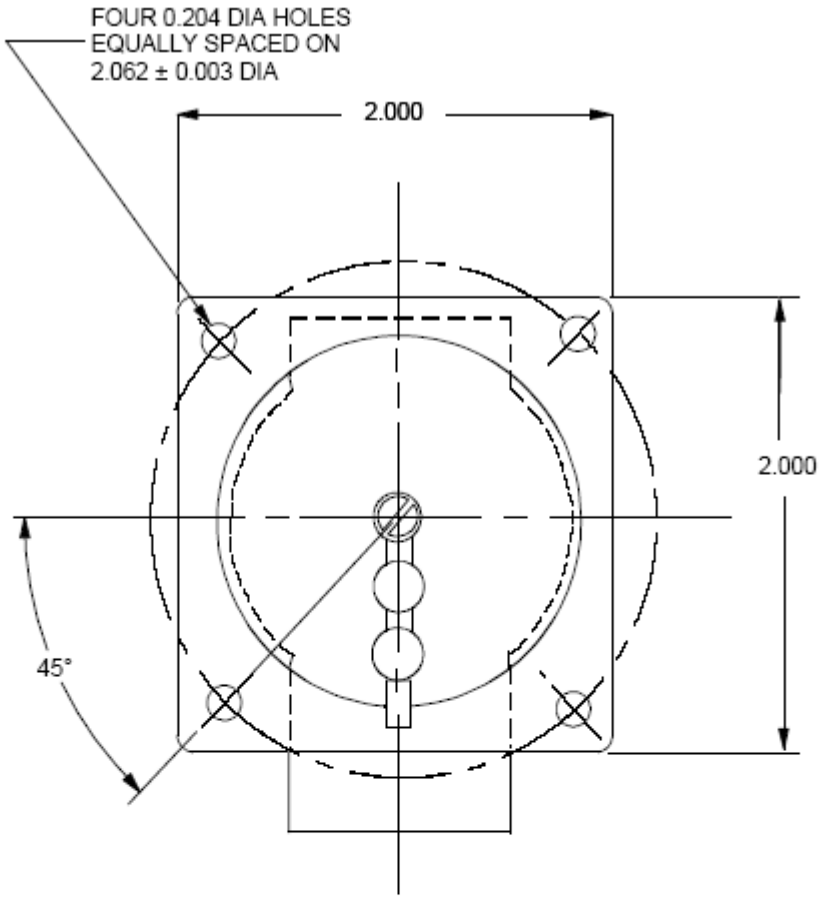

NOTES: 1. DIMENSIONS IN INCHES.
2. UNLESS OTHERWISE SPECIFIED, TOLERANCES ± 0.031.
3. FIGURE NOT TO SCALE.

FIGURE 1. Valve - capped end view

Downloaded from http://www.everyspec.com

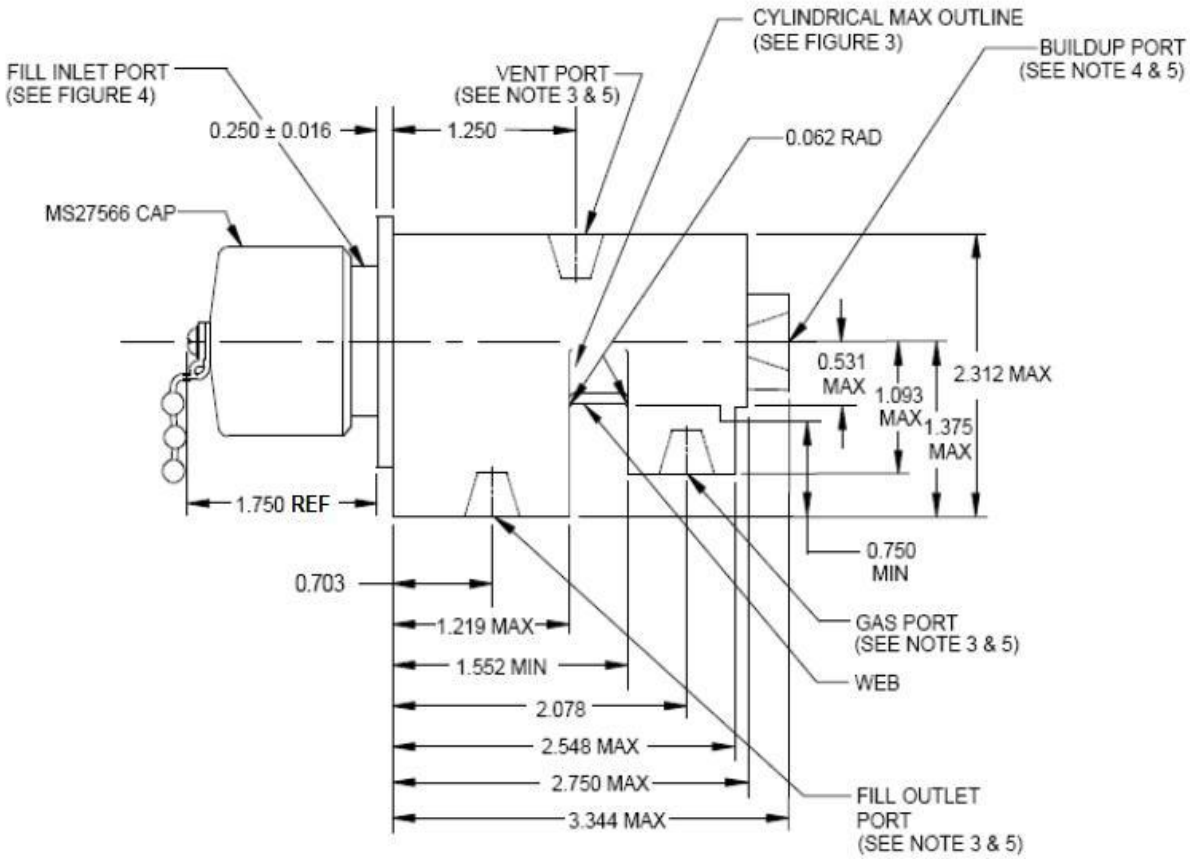

NOTES:
1. ALL PORT DIMENSIONS ± 0.015.
2. DIMENSIONS IN INCHES.
3. BOSS 0.375 NPT
   MIN THREAD DEPTH 0.468
   MAX BOSS DIA 0.910.
4. BOSS 0.125 NPT
   MIN THREAD DEPTH 0.312
   MAX BOSS DIA 0.593.
5. ALL PORTS SHALL BE MARKED.
6. FIGURE NOT TO SCALE.

FIGURE 2. Valve – side view.

Downloaded from http://www.everyspec.com

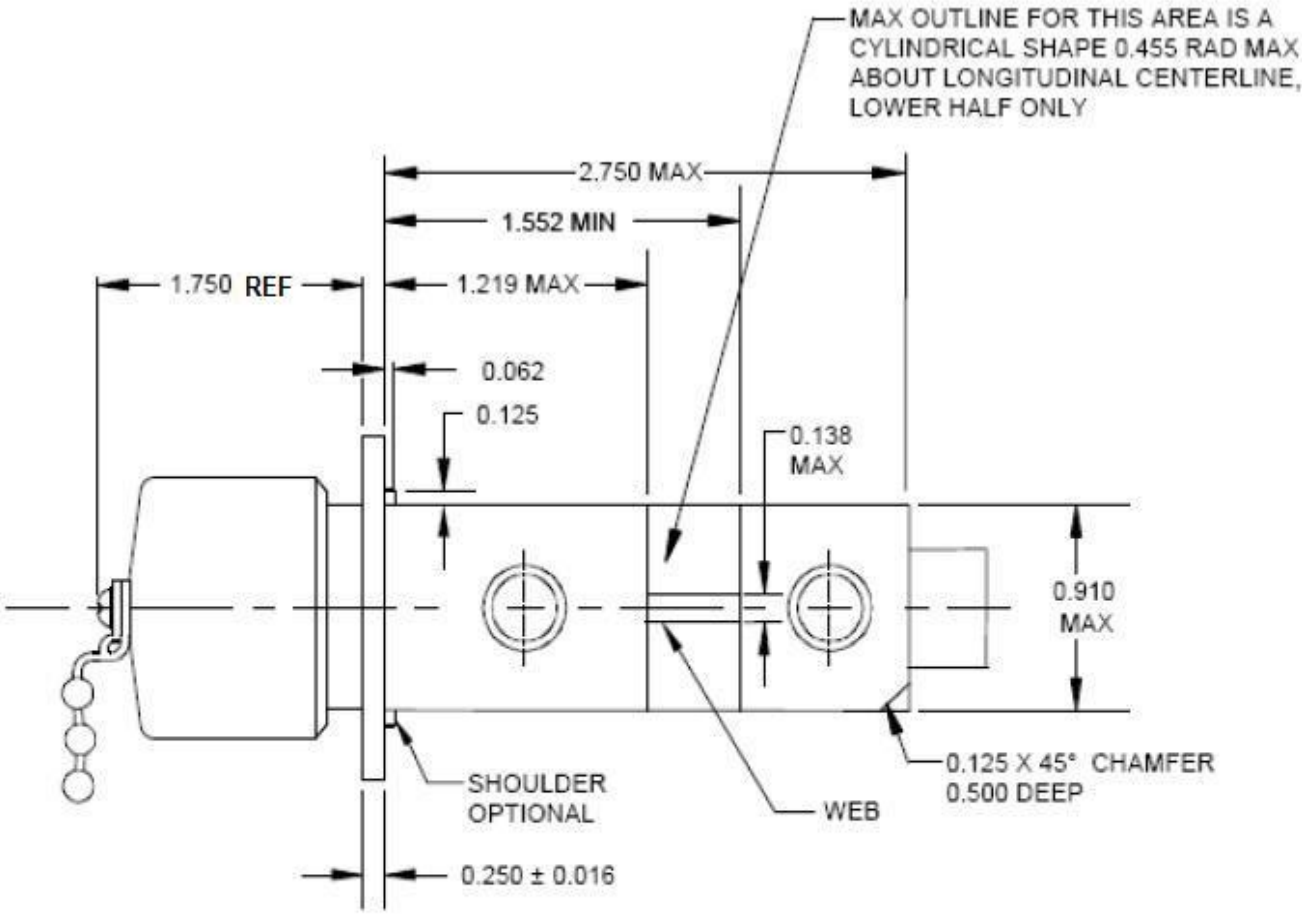

NOTES: 1. DIMENSIONS IN INCHES.
2. UNLESS OTHERWISE SPECIFIED, TOLERANCES ± 0.031.
3. FIGURE NOT TO SCALE.

FIGURE 3. Valve – bottom view.

Downloaded from http://www.everyspec.com

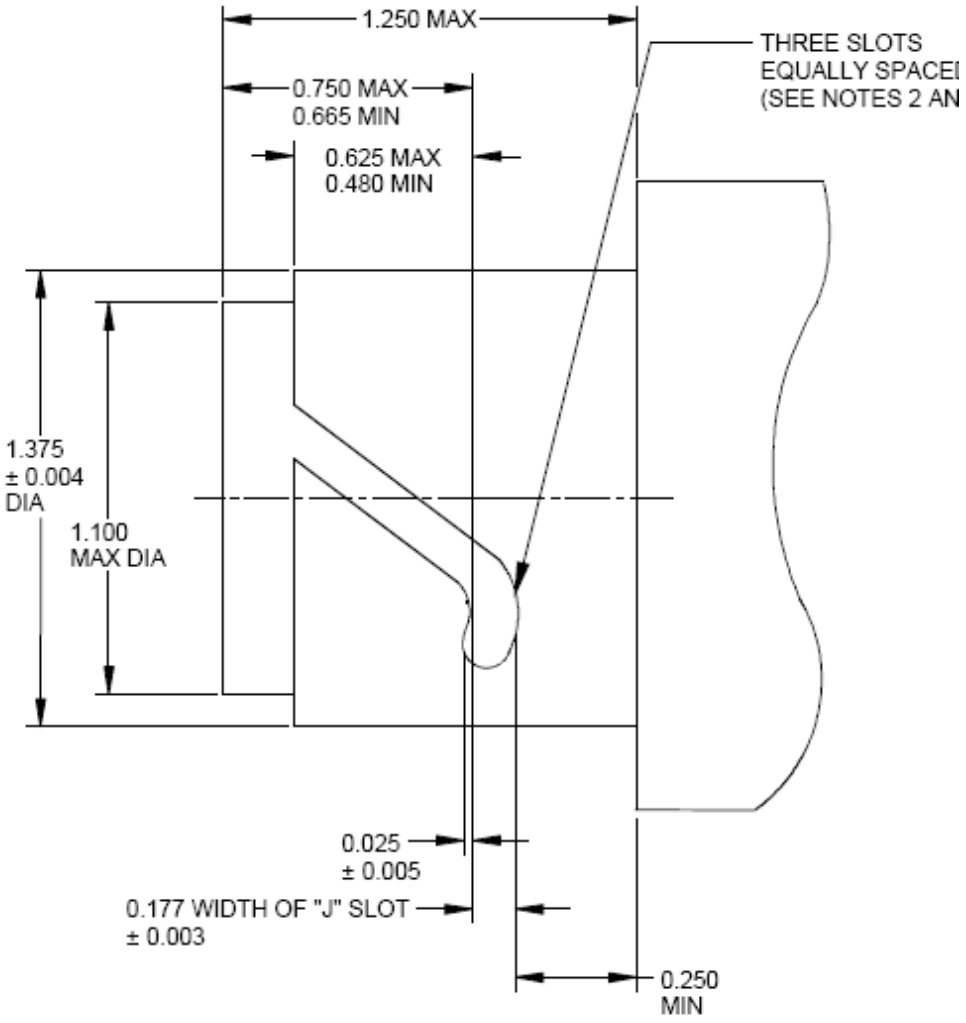

NOTES: 1. DIMENSION IN INCHES.
2. SLOTS LOCATED ON CIRCUMFERENCE OF 1.375 DIA.
3. MAXIMUM SURFACE ROUGHNESS OF THE SLOTS SHALL BE 63 IN ACCORDANCE WITH ASME B46.1.
4. FIGURE NOT TO SCALE.

FIGURE 4. Critical dimensions - mating portion of valve

Downloaded from http://www.everyspec.com

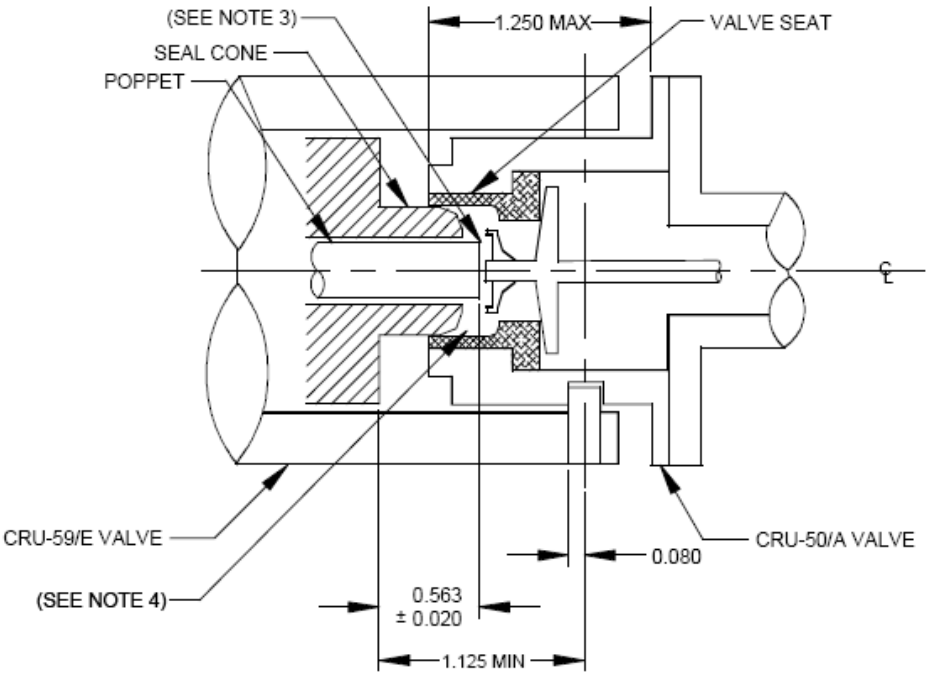

BUILDUP
(BOTH POPPETS CLOSED)

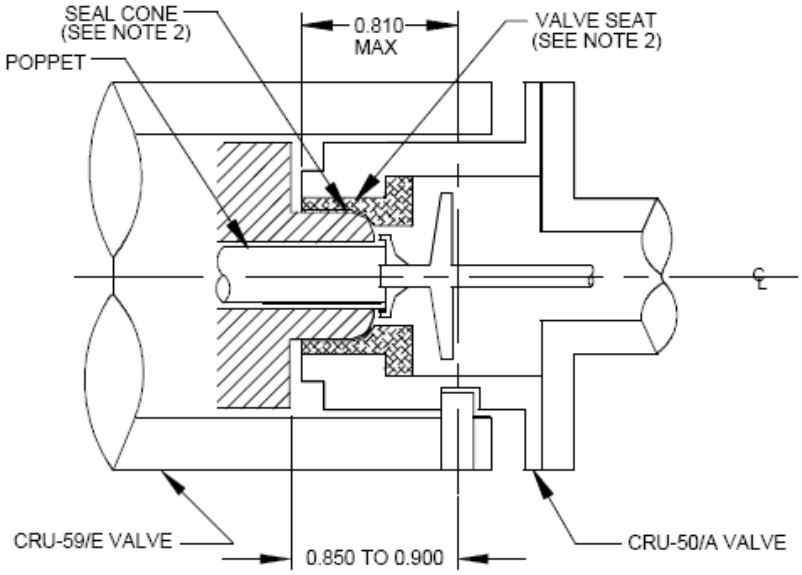

FILL-VENT
(BOTH POPPETS OPEN)

NOTES: 1. DIMENSION IN INCHES.
2. THE CRU-50/A VALVE SEAT SHALL SEAL ON THE CRU-59/E VALVE CONE AND MAINTAIN THE POSITION ILLUSTRATED WHILE UNDER A TOTAL VALVE-TO-VALVE FORCE OF 45 TO 55 POUNDS.
3. MINIMUM CLEARANCE TO AVOID OPENING POPPETS SHALL BE 0.030.
4. MINIMUM CONE TRAVEL BEFORE CONTACT SHALL BE 0.225.
5. FIGURE NOT TO SCALE.

FIGURE 5. Seal and striker interface

Downloaded from http://www.everyspec.com

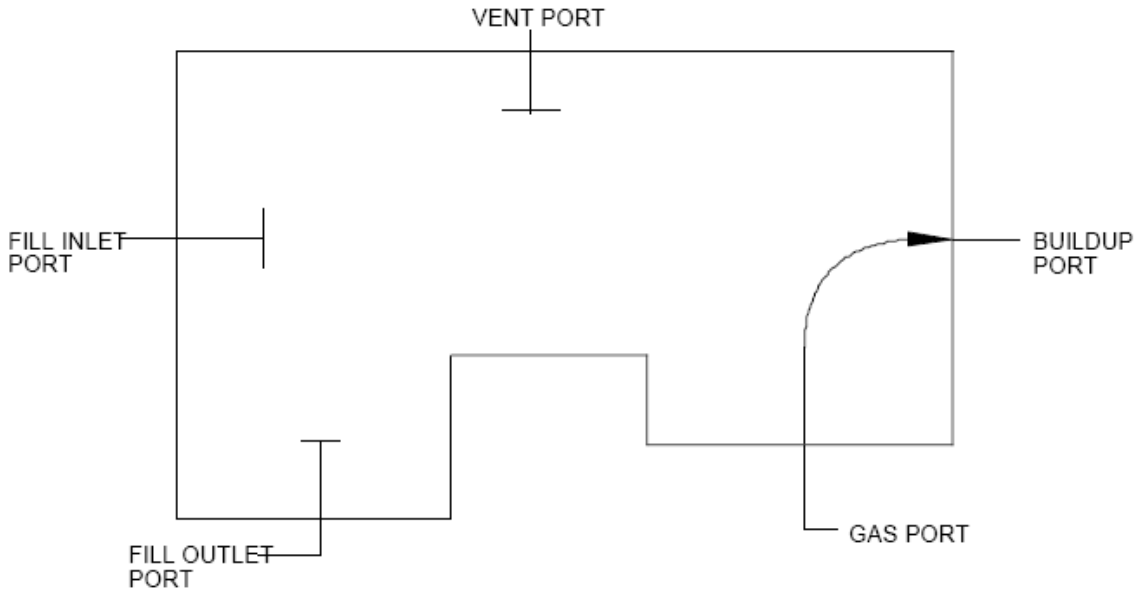

BUILDUP
(CRU-59/E VALVE DISCONNECTED)

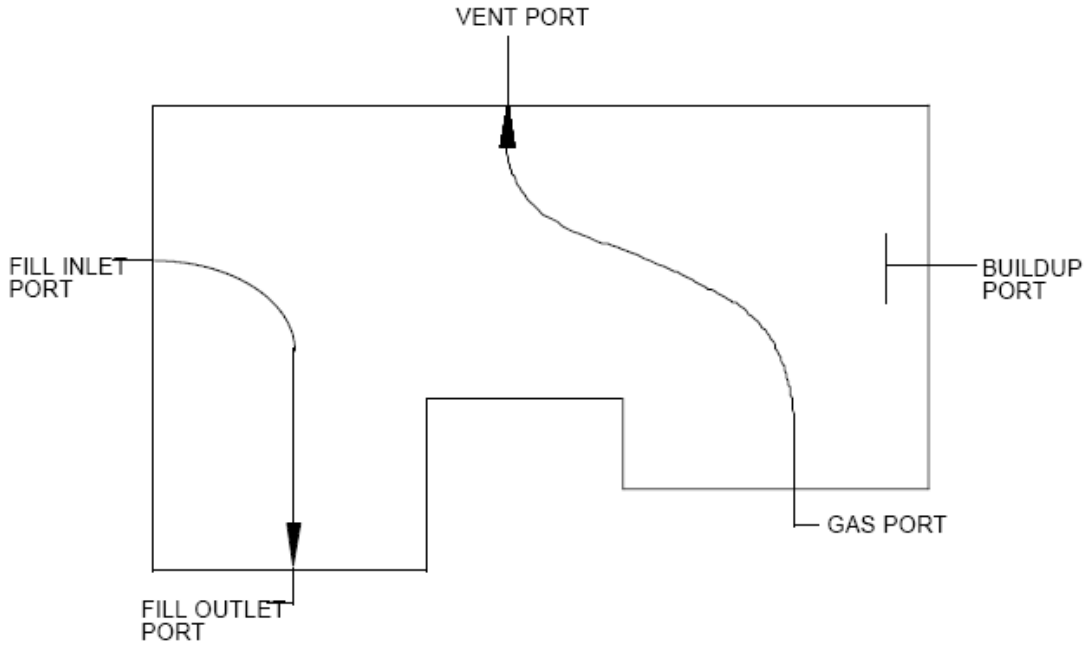

FILL-VENT
(CRU-59/E VALVE CONNECTED)

FIGURE 6. Flow pattern of CRU-50/A valve in fill-vent and buildup

Downloaded from http://www.everyspec.com

Custodian:
Air Force - 71
Navy - AS

Review activities:
DLA - CC
Navy - MC
Air Force – 99

Preparing activity:
Air Force - 71

(Project 4820-2011-005)

NOTE: The activities listed above were interested in this document as of the date of this document. Since organizations and responsibilities can change, you should verify the currency of the information above using the ASSIST database at https://assist.daps.dla.mil/.