Downloaded from http://www.everyspec.com

INCH-POUND

MIL-PRF-24775A(SH)
31 January 2005

SUPERSEDING
MIL-A-24775(SH)
13 July 1992

PERFORMANCE SPECIFICATION

AIR CONDITIONING FAN COIL UNITS, HORIZONTAL AND VERTICAL TYPES, NAVAL SHIPBOARD

This specification is approved for use by the Department of the Navy and is available for use by all Departments and Agencies of the Department of Defense.

1. SCOPE

1.1 Scope. This specification covers horizontal and vertical type air conditioning fan-coil units for use in heating and air conditioning applications aboard Naval ships.

1.2 Classification. The air conditioning fan-coil units are of the following classifications (see 6.2):

1.2.1 Types. The types of air conditioning fan units are as follows:

Type H - Horizontal, overhead mounting

Type V - Vertical, bulkhead mounting

Type NMH - Nonmagnetic construction, horizontal, overhead mounting

Type NMV - Nonmagnetic construction, vertical, bulkhead mounting

1.2.2 Sizes. The sizes of air conditioning fan units are as follows:

Sizes 1-8 - Capacity in British thermal units per hour in thousands (MBH) as specified in Table I

1.2.3 Classes. The classes of air conditioning fan units are as follows:

Heater kW - Heating in Kilowatt (kW) as specified in Table I

Class RH - Right Hand - type DW chilled water coil

Class LH - Left Hand - type DW chilled water coil

1.2.4 Grades. The grades of air conditioning fan units are as follows:

HI Shock - HI shock unit

Type X - Non-HI shock unit

Comments, suggestions, or questions on this document should be addressed to: Commander, Naval Sea Systems Command, ATTN: SEA 05Q, 1333 Isaac Hull Avenue, SE, Stop 5160, Washington Navy Yard DC 20376-5160 or emailed to commandstandards@navsea.navy.mil, with the subject line "Document Comment". Since contact information can change, you may want to verify the currency of this address information using the ASSIST Online database at http://assist.daps.dla.mil.

Downloaded from http://www.everyspec.com

1.2.5 Heater requirement. The heater requirements of air conditioning fan units are as follows:

Item A1 - Cooling unit with low voltage heater

Item A2 - Cooling unit with medium voltage heater

Item A3 - Cooling unit with high voltage heater

1.2.6 Motor protection. The motor protections of air conditioning fan units are as follows:

Motor Protection LVP - Low voltage protection

Motor Protection LVR - Low voltage release

1.3 Part or identifying number (PIN). PINs to be used for horizontal and vertical type air conditioning fan-coil units acquired to this specification are created as follows:

M	**24775**	**-**	**X**	**X**	**XX**	**X**	**X**	**X**
Prefix for Military Specification	Specification Number		Type (see code below)	Size (see code below)	Class (see code below)	Grade (see code below)	Heater requirement (see code below)	Motor protection (see code below)

Type Code		Size Code		Class Code		Grade Code		Heater Requirement Code		Motor Protection Code	
Type	Code	Size	Code	Class	Code	Grade	Code	Heater	Code	Motor protect.	Code
H	A	1	1	RH	RH	HI shock	1	A1	A	LVP	1
V	B	2	2	LH	LH	Type X	2	A2	B	LVR	2
NMH	C	3	3					A3	C		
NMV	D	4	4								
		5	5								
		6	6								
		7	7								
		8	8								

Examples: M24775-A2RH1A2

M24775-B8LH2B1

2. APPLICABLE DOCUMENTS

2.1 General. The documents listed in this section are specified in sections 3, 4, or 5 of this specification. This section does not include documents cited in other sections of this specification or recommended for additional information or as examples. While every effort has been made to ensure the completeness of this list, document users are cautioned that they must meet all specified requirements of documents cited in sections 3, 4, or 5 of this specification, whether or not they are listed.

Downloaded from http://www.everyspec.com

2.2 Government documents.

2.2.1 Specifications, standards, and handbooks. The following specifications, standards, and handbooks form a part of this document to the extent specified herein. Unless otherwise specified, the issues of these documents are those cited in the solicitation or contract.

DEPARTMENT OF DEFENSE SPECIFICATIONS

MIL-S-901	-	Shock Test, H.I. (High-Impact) Shipboard Machinery, Equipment, and Systems, Requirements for
MIL-PRF-16552	-	Filters, Air Environmental Control System, Cleanable, Impingement (High Velocity Type)
MIL-B-17931	-	Bearings, Ball, Annular, for Quiet Operation

DEPARTMENT OF DEFENSE STANDARDS

MIL-STD-167-1	-	Mechanical Vibrations of Shipboard Equipment (Type I - Environmental and Type II - Internally Excited)
MIL-STD-889	-	Dissimilar Metals
MIL-STD-1399-300	-	Interface Standard for Shipboard Systems, Electric Power, Alternating Current (Metric)
MIL-STD-1474	-	Noise Limits
MIL-STD-2031	-	Fire and Toxicity Test Methods and Qualification Procedure for Composite Material Systems Used in Hull, Machinery, and Structural Applications Inside Naval Submarines
MIL-STD-2142	-	Magnetic Silencing Characteristics, Measurement of (Metric)

(Copies of these documents are available online at http://assist.daps.dla.mil/quicksearch/ or http://assist.daps.dla.mil or from the Standardization Document Order Desk, 700 Robbins Avenue, Building 4D, Philadelphia, PA 19111-5094.)

2.2.2 Other Government documents, drawings, and publications. The following other Government documents, drawings, and publications form a part of this document to the extent specified herein. Unless otherwise specified, the issues of these documents are those cited in the solicitation or contract.

NAVSEA TECHNICAL PUBLICATION

S9074-AR-GIB-010/278	-	Requirements for Fabrication, Welding and Inspection, Casting Inspection and Repair for Machinery, Piping and Pressure Vessels

(Copies of this document are available from Naval Inventory Control Point, 700 Robbins Avenue, Attn: Code 0862 (Cash Sales), Philadelphia, PA 19111 or online at www.nll.navsup.navy.mil.)

2.3 Non-Government publications. The following documents form a part of this document to the extent specified herein. Unless otherwise specified, the issues of these documents are those cited in the solicitation or contract.

AIR CONDITIONING AND REFRIGERATION INSTITUTE (ARI)

ARI 410	-	Forced-Circulation Air-Cooling and Air-Heating Coils

(Copies of this document are available from the Air Conditioning and Refrigeration Institute, 1501 Wilson Boulevard, Suite 600, Arlington, VA 22209-2403, Attn: Publications Department, or online at www.ari.org.)

Downloaded from http://www.everyspec.com

AIR MOVEMENT AND CONTROL ASSOCIATION, INC. (AMCA)

AMCA 111	-	Laboratory Accreditation Program (DoD adopted)
AMCA 300	-	Reverberant Room Method for Sound Testing of Fans (DoD adopted)

(Copies of these documents are available from the Air Movement and Control Association, Inc., 30 West University Drive, Arlington Heights, IL 60004 or online at www.amca.org.)

AMERICAN NATIONAL STANDARDS INSTITUTE (ANSI)/AMERICAN BEARING MANUFACTURERS ASSOCIATION (ABMA)

ANSI/ABMA STD-4	-	Tolerance Definitions and Gaging Practices for Ball and Roller Bearings
ANSI/ABMA STD-9	-	Load Ratings and Fatigue Life for Ball Bearings
ANSI/ABMA STD-13	-	Rolling Bearing Vibration and Noise (Methods of Measuring)
ANSI/ABMA STD-20	-	Radial Bearings of Ball, Cylindrical Roller and Spherical Roller Types - Metric Design
ANSI/ABMA/ISO 3290	-	Rolling Bearings – Balls – Dimensions and Tolerances (DoD adopted)

(Copies of these documents are available from the American Bearing Manufacturers Association, Inc., 1101 Connecticut Ave., NW, Suite 700, Washington, DC 20036 or online at www.abma-dc.org.)

AMERICAN SOCIETY OF HEATING, REFRIGERATING, AND AIR CONDITIONING ENGINEERS, INC. (ASHRAE)

ASHRAE STD 33	-	Methods of Testing Forced Circulation Air Cooling and Air Heating Coils (DoD adopted)
ASHRAE STD 37	-	Methods of Testing for Rating Unitary Air-Conditioning and Heat Pump Equipment (DoD adopted)
ASHRAE STD 51	-	Laboratory Methods of Testing Fans for Aerodynamic Performance Rating

(Copies of this document are available from the American Society of Heating, Refrigerating and Air Conditioning Engineers, Inc., 1791 Tullie Circle, N.E., Atlanta, GA 30329 or online at www.ashrae.org.)

AMERICAN SOCIETY OF MECHANICAL ENGINEERS (ASME)

Boiler and Pressure Vessel Code, Section VIII, Division 1	-	Pressure Vessels

(Copies of these documents are available from the American Society of Mechanical Engineers, 345 East 47th Street, New York, NY 10017 or online at www.asme.org.)

AMERICAN WELDING SOCIETY (AWS)

AWS B2.1	-	Specification for Welding Procedure and Performance Qualification (DoD adopted)
AWS B2.2	-	Brazing Procedure and Performance Qualification (DoD adopted)

(Copies of these documents are available from the American Welding Society, 550 NW LeJeune Road, Miami, FL 33216 or online at www.aws.org.)

Downloaded from http://www.everyspec.com

ASTM INTERNATIONAL

ASTM A307	-	Standard Specification for Carbon Steel Bolts and Studs, 60,000 PSI Tensile Strength
ASTM E119	-	Standard Test Methods for Fire Tests of Building Construction and Materials (DoD adopted)
ASTM E662	-	Standard Test method for Specific Optical Density of Smoke Generated by Solid Materials (DoD adopted)
ASTM E800	-	Standard Guide for Measurement of Gases Present or Generated During Fires (DoD adopted)
ASTM F1166	-	Standard Practice for Human Engineering Design for Marine Systems, Equipment and Facilities (DoD adopted)

(Copies of these documents are available from ASTM International, 100 Barr Harbor Drive, West Conshohocken, PA 19428-2959 or online at www.astm.org.)

INSTITUTE OF ELECTRICAL AND ELECTRONICS ENGINEERS (IEEE)

IEEE STD 45	-	IEEE Recommended Practice for Electric Installations on Shipboard (DoD adopted)

(Copies of this document are available from the Institute of Electrical and Electronics Engineers, 445 Hoes Lane, P.O. Box 1331, Piscataway, NJ 08855-1331 or online at www.ieee.org.)

NATIONAL ELECTRICAL MANUFACTURERS ASSOCIATION (NEMA)

NEMA MG 1	-	Motors and Generators (DoD adopted)

(Copies of this document are available from the National Electrical Manufacturers Association, 2102 L Street N.W., Washington, DC 20037 or online at www.nema.org.)

2.4 Order of precedence. In the event of a conflict between the text of this document and the references cited herein, the text of this document takes precedence. Nothing in this document, however, supersedes applicable laws and regulations unless a specific exemption has been obtained.

3. REQUIREMENTS

3.1 First article. When specified (see 6.2), a sample shall be subjected to first article inspection in accordance with 4.2.

3.2 Materials. Cast iron shall not be used in the fan-coil unit nor shall cast iron be used in motors, which are components of the fan. Gray cast iron may be used for the fan and motor sheaves. Materials for fan-coil units shall be corrosion resisting or material shall be protected against corrosion after fabrication. Material degraded during the fabrication process shall be normalized to restore those properties before assembled in any fan-coil unit. Selected materials shall be capable of meeting all of the operational and environmental requirements specified herein.

3.2.1 Hazardous material. Materials for use in the construction of fan-coil units shall have no effect on the health of personnel when the materials are used for intended purpose. Regardless of other requirements, materials and parts containing asbestos, cadmium, lithium, mercury, or radioactive material shall not be used.

3.2.2 Fasteners. Material for all bolts, nuts, studs, screws and similar fasteners shall be corrosion-resistant passivated or of a material rendered resistant to corrosion and meet requirements of ASTM A307. Sheet metal screws shall not be used. Galling shall be prevented. Tapped holes shall be reinforced where shearing of thread can occur.

Downloaded from http://www.everyspec.com

3.2.3 Nonmagnetic construction. Unless otherwise specified (see 6.2), fan coil units of nonmagnetic construction shall have the cabinet unit, drain pan, mounting rails, filter, fans, fan motor bases, electrical components where available, grilles, and fasteners constructed on nonmagnetic material. Nonmagnetic material is defined as a material that has a maximum relative permeability of less than 2.0 after fabrication. Permeability shall be determined in accordance with MIL-STD-2124, test 501.

3.2.3.1 Motor material. Motor material shall conform to the requirements of IEEE STD 45 or NEMA MG 1 for nonmagnetic motors.

3.2.4 Dissimilar metals. Fan-coil unit and components shall not be degraded by electrolysis and conform to MIL-STD-889.

3.2.5 Recycled, recovered, or environmentally preferable materials. Recycled, recovered, or environmentally preferable materials should be used to the maximum extent possible, provided that the material meets or exceeds the operational and maintenance requirements, and promotes economically advantageous life cycle costs.

3.3 Painting. The color of the fan coil assembly shall be Light Gray, Navy Formula 111 of MIL-DTL-15090, unless otherwise specified in 6.2.

3.4 Welding and allied processes. Surfaces of parts to be welded or brazed shall be free from rust, scale, paint, grease, and other foreign matter. Welding and allied processes shall be performed by personnel certified to AWS B2.1 and B2.2. NAVSEA Technical Publication S9074-AR-GIB-010/278 shall be used for guidance.

3.5 Identification plate. Each fan-coil shall be provided with a permanently attached, corrosion-resistant identification plate. The plate shall be located in a prominent location on the unit that is easily visible in either a horizontal or vertical orientation. Method of attachment of the identification plate shall be corrosion-resistant. The plate shall contain the following information:

a. National stock number (NSN)
b. Manufacturer's name, commercial and government Entity (CAGE), and part number
c. PIN code
d. Contract or order number

3.6 Interchangeability. Unless otherwise specified (see 6.2), all identically identified components shall be functionally and physically interchangeable without degradation of performance, reliability, or operating characteristics, and without selective assembly or modification except for calibration and adjustment. Repair parts shall be interchangeable with, and identically identified with, the parts they replace.

3.7 Operating life. Fan-coils shall have an operating life of 140,000 hours. The basis for design of replacement parts shall be 5 years of ship operation (37,300 hours). New and replacement heater elements shall be designed for an operating life of 21,000 hours.

3.8 Maintainability. The construction of fan-coil units shall be as follows for maintainability:

a. Air filters shall be accessible for cleaning and/or replacement. Air filters shall be accessible without the use of any tools or requiring power to the fan-coil unit to be secured. Access panels, if used, shall have quick-acting fasteners to secure the panel in the closed position. There shall be no danger of electrical energy or mechanical hazard to personnel changing filters.
b. Fans and fan motors shall be accessible for servicing, testing, replacement, or for all three purposes by removal of a bolted access panel.
c. Cooling coil shall be accessible for cleaning, or replacement, or both. Coil cleaning shall be accomplished without removal of cooling coil. Cooling coil shall be accessible for venting, or draining, or both without removing a bolted access panel.
d. Electric heater shall be accessible for servicing and testing.
e. Wiring, terminals, and electrical connections shall be accessible for servicing and testing. Removal of fan, motor, heater, or other electrical components shall not be required.

Downloaded from http://www.everyspec.com

f. Scheduled maintenance shall not be required more than once per week. The average elapsed time per week for scheduled maintenance shall not exceed 15 minutes.

3.9 Mean-time-to-repair (MTTR). The maintainability requirements of all shock grade A equipment expressed as MTTR shall be 1.3 hours.

3.10 Human engineering. Human engineering design criteria and principles shall be applied in the design and construction of the fan-coil unit to achieve safe, reliable, and effective performance by the operator and maintenance personnel while optimizing personnel skill requirements. ASTM F1166 shall be utilized as a guideline in applying human engineering design criteria for the fan-coil unit.

3.11 Design requirements. A fan-coil unit shall be a complete assembly, ready for shipboard installation, that contains all components necessary for providing sufficient heating, cooling, and air recirculation required to satisfy compartment environmental design conditions. Each unit shall consist of a fan(s) and a 2-speed fan motor(s), air filter, thermal and acoustic insulation, thermostat, electrical control relays, and a chilled water-cooling coil. Optional inlet and outlet grilles and electric heater are also installed, when specified. Type H units shall be designed for horizontal mounting to overhead decking. Type V units shall be designed for vertical mounting to bulkheads. Both types of fan-coil units shall be capable of being installed with or without ductwork. Bolt holes shown in Figure 1 and Figure 2 shall be used for connection of ductwork or optional grilles. Electrical creepage and clearance distances used in construction of fan-coil units shall be considered.

3.11.1 General design characteristics. General shipboard design characteristics shall be as follows:

a. Power source quality - In accordance with MIL-STD-1399-300.

b. Entering dry bulb (DB) temperatures of 70 degrees F (°F) minimum to 100 °F maximum.

c. Entering wet bulb (WB) temperatures of 58 °F minimum to 82 °F maximum.

d. Entering chilled water temperature of 45 °F.

3.11.2 Sizes. Sizes of fan-coil units shall be limited to those listed in Table I.

3.11.3 Capacity. Fan-coil unit capacity shall be as specified in Table I. Selection information shall be as specified.

TABLE I. Fan-coil unit capacity. [1/]

Fan-coil unit size	Rated values [2/] (Wet cooling coil)			Nominal capacity range	
	Airflow ft^3/min	External static pressure (in. w.g.)	Capacity (MB)	Cooling [3/] (MBH) EDB (°F) 70 - 100 EWB (°F) 58 - 82	Heating (kW) heater size (Low, Medium, High)
1	145	0	5.85	2.78 - 12.86	1.2, 2.2, 3.3
2	240	0	9.69	4.63 - 21.03	1.2, 2.2, 3.3
3	350	0.25	15.28	7.27 - 34.39	1.75, 3.5, 5.25
4	530	0.25	22.89	10.98 - 50.06	2.0, 4.0, 6.0
5	690	0.25	30.50	14.66 - 66.01	2.0, 4.0, 6.0
6	950	1.0	39.91	18.94 - 90.44	3.0, 6.0, 9.0
7	1100	1.0	45.56	21.67 - 102.44	3.0, 6.0, 9.0
8	1650	1.0	72.92	34.80 - 161.35	3.0, 6.0, 9.0

Downloaded from http://www.everyspec.com

TABLE I. Fan-coil unit capacity - Continued. [1/]

Notes:

[1/] Abbreviations

ft^3/min = cubic feet per minute
in. w.g. = inches of water gauge, external static pressure at fan-coil unit discharge (± 5%)
r/min = revolutions per minute
MBH = Btu/h in thousands
Btu/h = British thermal units per hour
EDB = entering dry bulb air temperature
EWB = entering wet bulb air temperature
°F = degrees Fahrenheit
kW = kilowatts
gal/min = gallons per minute, chilled water flow rate

[2/] Rated airflow and capacity shall be at design operating conditions, that is, high speed (1800 r/min), air EDB 80 °F, and air EWB 67 °F. Fan motors shall have two speeds. Low speed shall be 1200 r/min.

[3/] Cooling capacity and cooling coil sizing shall be based on 45 °F chilled water and a minimum waterside fouling factor of 0.0005. Cooling capacity shall be the required cooling coil load (MBH), at the specified cooling coil entering air conditions (EDB, EWB), in the section of the fan-coil unit between the fan discharge and the cooling coil inlet. This load shall include compartment and replenishment air total heat loads (sensible and latent) and fan motor sensible heat.

3.11.4 Operation. Fan-coil units shall be constructed for continuous operation unless a low voltage condition, a temporary loss of voltage, or activation of the manual "stop" pushbutton or switch opens the electrical control circuitry, turning off the unit.

3.11.5 Physical interface dimensions. To suit interface requirements and equipment interchangeability, the physical layout of the fan-coil unit shall be limited to Figure 3, the mounting to Figure 4, the duct inlet connection to Figure 1, and the duct outlet connection to Figure 2.

3.11.6 Cabinet. The cabinet enclosure shall be of a material equivalent in strength to 0.059 USSGA steel. The frame or chassis shall be rigid and of adequate strength to support and maintain alignment of the assembled parts. The cabinet shall be designed to be hard mounted to the ship foundation without the need for external vibration isolators. All seams shall be sealed to prevent air leakage under normal operating conditions. The cabinet shall have standard features that permit left- or right-hand assembly of the cooling coil by the installing activity. All interior material components between the fan outlet and the heater outlet shall be corrosion resistant material.

3.11.6.1 Mounting rails. Mounting rails shall be located on the sides of the unit, flush with the top surface of the cabinet, as shown in Figure 3. Mounting rails shall be of sufficient strength to support individual units under HI shock in accordance with MIL-S-901 for grade A, class I, type A equipment. Mounting rails shall be predrilled as specified on Figure 4 to standardize mounting for interchanging units.

3.11.6.2 Insulation.

3.11.6.2.1 Thermal insulation. All internal surfaces of the cabinet or chassis that are subject to condensation shall be provided with insulation to prevent dripping or a continuous flow of moisture under rated capacity conditions. Insulation shall be of a non-halogenated closed cell type and shall not produce toxic smoke when exposed to a fire.

3.11.6.2.2 Acoustic insulation. Where acoustic insulation is required, it shall be such that it will satisfy both thermal and airborne noise requirements. Acoustic insulation shall not produce toxic smoke when exposed to a fire.

3.11.6.3 Access panels. Provision shall be made to permit access to and removal of fan, fan motor, electric heater, electrical controls, and cooling coil. Bolted, removable access panels, if used, shall be formed and flanged and shall be interchangeable on fan-coil units of the same type and size. Flanged surfaces, which support removable

Downloaded from http://www.everyspec.com

panels and access openings, shall be gasketed and airtight. Gaskets shall be of heat and moisture-resistant silicone rubber or neoprene. All access panel bolts and washers shall be corrosion resistant material. Access panels for filter removal shall be hinged with quick-acting captive fasteners to secure the panel in a closed position. Quick-acting captive fasteners shall not require a special tool to operate.

3.11.7 Air inlet and outlet. Air shall enter each fan-coil unit via the inlet end section and exit via the opposite end outlet section. Both the inlet and outlet shall have smooth flat surfaces with predrilled and tapped bolt holes, as shown on Figure 1 and Figure 2, for flanged duct connections. Unless otherwise specified (see 6.2), inlet and outlet grilles shall be optional.

3.11.7.1 Inlet grille. The inlet grille, if provided, shall be a commercial, standard size, heavy duty, fixed louver grille with gasket. Louvers shall not rattle or vibrate when airflow is applied.

3.11.7.2 Outlet grille. The outlet grille, if provided, shall be of the double deflection type and shall permit adjustable, directional airflow in both horizontal and vertical planes. Grilles for fan-coil units H1, H2, V1, and V2 may have fixed louvers.

3.11.8 Air filters. Air filters shall be provided for filtering all air entering the unit. The air filters shall be Navy standard, high velocity type in accordance with MIL-PRF-16552. Provisions shall be made to hold the filters in place when the access door is opened.

3.11.9 Static air pressure tap. Fan-coil units shall be provided with a static air pressure tap on the downstream side of the filters for permanent mounting of a differential pressure gauge or for checking static pressure with a portable differential pressure gauge. The tap shall consist of a gasketed, brass or corrosion resistant steel, ¼-inch tube, straight bulkhead connection with sealing cap and protective cover suitable for permanent mounting to side of cabinet.

3.11.10 Fan motors. Fan motors shall be continuous duty, HI shock qualified, 440-volt, 3-phase, 60-Hertz (Hz) with drip-proof enclosure, two speeds (1800 and 1200 r/min), fan cooled, designed in accordance with IEEE STD 45, NEMA MG 1, and MIL-S-901. Type X fan-coil units shall have commercial marine motors designed in accordance with IEEE STD 45. A wiring terminal strip in the vicinity of fan motor(s) or a motor terminal housing for electrical connection shall be provided to facilitate replacement of fan motors without disturbing other wiring.

3.11.10.1 Bearings. Motors shall be equipped with sealed grease-filled bearings. Bearings shall be in accordance with ANSI/ABMA precision classification of ABEC-5 in accordance with ANSI/ABMA STDS 4, 9, 13, 20, and ANSI/ABMA/ISO 3290. Means shall be provided to ensure that grease is always available to the bearing and to prevent the leakage of oil or grease along the shaft. Special bearings for quiet operations when specified (see 6.2) shall be in accordance with ANSI/ABMA 4, 9, 13, 20, ANSI/ABMA/ISO 3290, and MIL-B-17931. Bearings shall be removable using standard available tools.

3.11.10.2 Thermal protection. Motors shall be equipped with thermal protection, which shall consist of a minimum of 3 thermal protectors (switches) to detect over-temperature. Thermal protectors shall be the automatic reset type with locked rotor temperature limit set for class B insulation systems.

3.11.10.3 Motor mount. A positive method shall be provided to prevent motors from rotating in a frame/support/mount.

3.11.11 Fans. Fans shall be the centrifugal type with direct drive.

3.11.11.1 Fan construction. Fan wheel shall be designed for minimum tip speed of 3650 feet per minute (ft/min). The fan shall be statically and dynamically balanced and tested after being installed in the fan-coil unit.

3.11.11.2 Fan shaft. Fan shall be direct driven with the fan wheel mounted on the motor shaft.

3.11.11.3 Resilient mounts. The fan and motor assembly shall be vibration-isolated.

3.11.12 Cooling coil. The chilled water-cooling coil shall be at least 4 rows deep in the direction of airflow. The coil shall be designed with a minimum waterside fouling factor of 0.0005 and shall have a maximum allowable working pressure rating of 200-lb/in^2 gauge at 250 °F. Fin spacing shall be limited to 11 or 12 fins per linear inch. The tubes shall be protected against wear and breakage because of shipboard vibration or expansion and contraction

Downloaded from http://www.everyspec.com

of the tubes. The chilled water supply and return connections shall be on the same end of the coil and supplied with union connections conforming rated for 400 lb/in^2 at 150 °F. The cooling coil shall be sized for a maximum chilled flow rate of 3.6 gallons per minute per ton of cooling including fan motor heat and a maximum pressure drop of 12 lb/in^2 across the coil (see 4.5.2.7). The cooling coil shall show no leakage. Tube sizes shall not be less than ⅝-inch diameter. Ferrules shall be provided where tubes pass through tube sheets in order to prevent wear and breakage because of shipboard vibration or expansion and contraction of tubes.

3.11.12.1 Right-/left-hand unit. The location of the chilled water supply and return connections of the cooling coil shall determine the orientation of the fan-coil unit, when looking in the direction of the airflow with the unit in its normal operating position. Unless otherwise specified in 6.2, fan-coil units shall be supplied right-handed. The cooling coil shall be field interchangeable from right- to left-hand.

3.11.12.2 Vent and drain valves. Cooling coil shall be equipped with vent and drain valves in the coil inlet and outlet lines to eliminate breaking the chilled water inlet and outlet union connections for venting and draining purposes. Valves shall be accessible from outside the cabinet. The vent and drain shall terminate in the condensate drain pan.

3.11.12.3 Drain pan. Fan-coil units shall have a condensate drain pan of sufficient depth to prevent spillover when units are operated. All units shall meet this requirement when permanently inclined 15 degrees in any direction from the normal position. The drain pan shall be fitted with drains, male connection on each end. The drain pan shall be made of corrosion-resistant material.

3.11.13 Heater. Unless otherwise specified (see 6.2), electric heaters are optional and, if provided, shall be of the finned type and located downstream of the cooling coil. The kilowatt (kW) rating of heaters shall be as specified in Table I.

3.11.13.1 Heater protection. The heater shall be provided with a thermal protector (over-temperature switch) with manual reset. The manual reset shall be accessible from the outside of the fan-coil unit. The switch shall be set to limit the surface temperature of the heating elements to a maximum of 750 °F. The switch shall be suitable for pilot duty on 115-volt alternating current.

3.12 Performance requirements. Performance shall be in accordance with Table I.

3.12.1 Control circuitry. Unless otherwise specified (see 6.2), fan-coil units shall be LVP, control circuitry shall be designed for continuous airflow and give the following sequence of operation:

Entering air temperature (°F)	Unit operation (on rising temperature)
Below 72	Cooling and heating units - fans on high speed and heater on. Cooling only units - fans on low speed.
72 to 76	Cooling and heating units - fans on low speed and heater off. Cooling only units - fans remain on low speed.
77 to 81	Both units - fans on low speed and remote chilled water valve energized providing water to cooling coil.
82 and above	Both units - fans on high speed, and remote chilled valve remains energized providing water to cooling coil.

NOTE: If optional humidistat is provided for cooling and heating units, the remote chilled water valve is energized anytime the relative humidity is above 55 percent (set point) regardless of temperature.

3.12.2 Fan motor contactor. Fan-coil units shall have internally-mounted, dual-speed, motor contactors or power relays for fans. Contactors or power relays shall be of sufficient size to control the fan motor at high and low speeds.

3.12.3 Heater contactor. Fan-coil units with heaters shall have an internally mounted contactor or power relay for the heater. The contactor or power relay shall be of sufficient size to control the largest heater, as specified in Table I, for a fan-coil unit size.

3.12.4 Thermostat. Fan-coil units shall have an internally mounted, three-stage thermostat capable of controlling, in sequence, the fan motor speed, the remote chilled water solenoid valve, and the internal optional

Downloaded from http://www.everyspec.com

heater. The thermostat shall be accessible through an access panel.

3.12.5 Heater operation. The heater shall provide continuous operation under normal shipboard environmental conditions, such as vibration and the presence of moisture in the air stream. Heaters shall operate in an environment up to 100 percent relative humidity and shall have 1 increment of heat. Heaters shall be designed for 3-phase operation and shall have 3, or a multiple of 3 elements of equal wattage so that a balanced 3-phase load is provided. Heaters shall provide continuous operation at an airflow of 80 to 125 percent of the fan-coil unit rated airflow as specified in Table I.

3.12.5.1 Heating elements. Heating elements shall be of the enclosed type in a hermetically sealed, finned sheath. Maximum surface temperature shall not exceed 750 °F at rated airflow. Element shall meet the requirements of 3.12.5.2 and 3.12.5.3 after the element has been completely immersed in water while under a hydrostatic gauge pressure of at least 60 pounds per square inch for a period of at least 20 minutes. Element shall be capable of continuous operation at rated kW with rated airflow as specified in 3.7. Element watt density shall not exceed 55 watts per square inch of sheath area (excluding fin area).

3.12.5.2 Insulation resistance. Insulation resistance of the element at normal operating temperature (see 3.11.13.1) shall be not less than 25 megohms. Insulation resistance when each heating element (excluding wiring) is at ambient room temperature shall be not less than 200 megohms.

3.12.5.3 Dielectric strength. Heating element shall withstand a dielectric test of twice the rated line voltage plus 1000 volts for a period of 1 minute. The voltage wave shall approximate a sine wave, and frequency shall not be less than 60 Hz.

3.12.5.4 Moisture resistance. Heater element shall be immersed in water and while immersed subjected to a hydrostatic gage pressure of at least 60 PSI for a period of at least 20 minutes. Terminals of the element shall be wiped dry and subjected to dielectric test and the insulation resistance test (see 4.5.2.11).

3.12.5.5 Heater life expectancy. An accelerated life test by fusion shall verify life expectancy of 21,000 hours as described in 4.5.2.11.1.

3.12.5.6 Heater element creepage and clearance.

a. Creepage distance is the shortest distance between energized parts or between an uninsulated energized part and ground, along the surface of an insulating material. When necessary, insulating barriers may be used to interrupt continuous electrical creepage paths. Cemented or butted joints shall not be used.

b. Creepage distance ¼ inch maximum.

c. Clearance distance is the shortest point-to-point distance in air between uninsulated energized parts or between an energized part and ground.

d. Clearance distance ⅛ inch minimum.

3.12.6 Electrical requirements.

3.12.6.1 Electrical power cable entrance. A blank, gasketed plate shall be provided on each side of the fan-coil unit in the general area of the control terminal strip to permit installation of shipboard cable by the installing activity.

3.12.6.2 Electrical wiring and connections. Wiring shall be neat and tied or clamped in a manner that supports and prevents chafing of the wire insulation because of vibration and shock. There shall be no splices in the wire and the connections shall be at the terminals of the devices or terminal strips. Wiring shall be clear of access panels and located out of the air stream whenever possible. Wiring shall be clear of areas that may require maintenance and shall be so routed within the cabinet that no damage will occur when drilling or assembling the units.

3.12.6.3 Grounding connections for electromagnetic compatibility. Fan-coil units shall be grounded and bonded in accordance with IEEE STD 45.

Downloaded from http://www.everyspec.com

3.13 Environmental conditions.

3.13.1 Shock. Unless otherwise specified in 6.2, fan-coil units shall pass the HI shock tests specified in MIL-S-901 for grade A, class I, type A equipment (see 4.5.3.1). Internal shock and vibration mounts shall be provided in conjunction with the mounting arrangement for the fan and motor assembly.

3.13.2 Vibration. Fan-coil units shall withstand, without damage or malfunction, environmental vibrations in accordance with MIL-STD-167-1 for type I "environmental vibration" for frequencies up to and including 33 Hz. The rotating components of the fan-coil units shall meet the balance requirements of MIL-STD-167-1 for type II vibration.

3.13.3 Airborne noise. The total sound power level for a fan-coil unit shall not exceed the levels specified in Table II when tested in accordance with the procedures defined in 4.5.2.13.

3.13.4 Replenishment air. Replenishment air introduced into fan-coil unit is sea air at temperatures of 40 °F to 95 °F.

TABLE II. Airborne noise sound power levels (un-weighted) in decibels (dB) referenced to 10^{-12} watt.

	Octave band center frequency (Hz)							
Fan-coil unit size	63	125	250	500	1000	2000	4000	8000
1	82	79	76	73	70	67	64	61
2	82	79	76	73	70	67	64	61
3	82	79	76	73	70	67	64	61
4	82	79	76	73	70	67	64	61
5	82	79	76	73	70	67	64	61
6	82	79	76	73	70	67	64	61
7	82	79	76	73	70	67	64	61
8	82	79	76	73	70	67	64	61

3.14 Labels.

3.14.1 Safety label plates. Safety label plates, requesting electric power shut-off before removal of access plates for testing or maintenance, shall be installed in a visible location on the front of vertical units and on the underside of horizontal units.

3.14.2 Terminal boards and covers. Terminal boards and covers over equipment shall be marked.

3.14.3 Wiring diagram. A reduced copy of the heater wiring diagram shall be permanently attached to the inside of the enclosure access cover for indication of the electrical connections.

4. VERIFICATION

4.1 Classification of inspections. The inspection requirements specified herein are classified as follows:

a. First article inspection (see 4.2).

b. Conformance inspection (see 4.3).

4.2 First article inspection. First article inspection shall be performed on each size fan-coil unit when a first article sample is required (see 3.1). This inspection shall include the examination of 4.4 and the tests of Table III.

Downloaded from http://www.everyspec.com

TABLE III. First article and quality conformation inspections.

Verifications	Applicability type/size [1/]	Requirement	Test method	First article	Conformance
Group A:					
Dimensional verification	All	3.11.5	4.5.1.1	X	X
Maintainability verification	All	3.8 & 3.9	4.5.1.2	X	X
Safety verification	All	3.14.1	4.5.1.3	X	X
Group B:					
Capacities (rated) Condensation	All	3.11.4	4.5.2.1 4.5.2.2	X	
Fan performance	All	3.11.4	4.5.2.4	X	
Fan motor	Each HP	3.11.10	4.5.2.5	X	
Cooling performance	H5, H8	3.11.4	4.5.2.6	X	
Cooling coil sizing (pressure drop)	All	3.11.12	4.5.2.7	X	
Heater performance	All	3.11.13	4.5.2.8	X	
Over temperature protection	All	3.11.13.1	4.5.2.9	X	
Dielectric strength	All	3.12.5	4.5.2.10	X	X
Element characteristics	All	3.12.5.1-3.12.5.6	4.5.2.11	X	X
Unit operation	All	3.11.4	4.5.2.12	X	X
Airborne noise	All	3.13.3	4.5.2.13	X	
Permeability	All nonmagnetic	3.2.3	4.5.2.14	X	X
Group C:					
Shock	H2, H5, H8, V2, V5, V8	3.13.1	4.5.3.1	X	
Coil leakage	All	3.11.12	4.5.3.2	X	X
Internally excited vibration	All	3.13.2	4.5.3.3	X	
Environmental (external) vibration	H2, H5, H8, V2, V5, V8	3.13.2	4.5.3.4	X	
Maintainability	H2, H5, H8 V2, V5, V8	3.8 & 3.9	4.6	First production unit	

Note:

[1/] Applies to fan-coil unit of the type/size indicated

4.3 Conformance inspection. Conformance inspection shall include the examination of 4.4 and the tests of Table III.

4.4 Examination. Each fan-coil unit shall be examined for compliance with the requirements specified in 3.2 through 3.11.13. Any redesign or modification of the contractor's standard product to comply with the special requirements, or any necessary redesign or modification following failure to meet the specified requirements shall receive particular attention for adequacy and suitability. This element of inspection shall encompass all visual examinations and dimensional measurements. Non-compliance with any specified requirements or presence of one

Downloaded from http://www.everyspec.com

or more defects preventing or lessening maximum efficiency shall constitute cause for rejection.

4.5 Test sequence. The sequence for testing the fan-coil unit shall be in the order shown in Table III.

4.5.1 Group A tests.

4.5.1.1 Dimensional verification. Fan-coil units shall be measured to verify compliance with 3.11.2 dimensional requirements.

4.5.1.2 Maintainability verification. Information from selected unique test reports shall be reviewed to determine that the components conform to the requirements specified in 3.8. Service and access requirements shall be verified by demonstrating that the maintenance functions can be accomplished as specified herein (see 4.6).

4.5.1.3 Safety verification. Examination of the equipment shall be performed to determine that the equipment and personnel safety requirements of 3.11.13.1 and 3.14.1 have been satisfied.

4.5.1.4 Group A test schedule. The schedule for Group A tests shall be performed in the following order:

a. Dimensional verification (see 4.5.1.1).
b. Maintainability verification (see 4.5.1.2).
c. Safety verification (see 4.5.1.3).

4.5.2 Group B tests.

4.5.2.1 Capacities. Capacity tests shall be conducted on one fan-coil unit of each type and size, with the highest rated kW heater, to confirm rated capacities at conditions specified in Table I. Capacity tests shall be conducted under the following conditions with the fan running at high speed:

Unit size	Entering air temp	Entering water temp. (°F)	Gal/Min	External static pressure (in. w.g.)
1	80 °F DB/67 °F WB	45	1.9	0
2	80 °F DB/67 °F WB	45	3.0	0
3	80 °F DB/67 °F WB	45	4.8	0.25
4	80 °F DB/67 °F WB	45	7.3	0.25
5	80 °F DB/67 °F WB	45	9.5	0.25
6	80 °F DB/67 °F WB	45	13.2	1.0
7	80 °F DB/67 °F WB	45	15.1	1.0
8	80 °F DB/67 °F WB	45	24.5	1.0

The following cooling capacity tests shall be performed when specified (see 6.2) with the unit inclined 15 degrees toward the motor end:

Unit size	Entering air temp	Entering water temp. (°F)	Gal/Min	External static pressure (in. w.g.)
H-8 and V-8	80 °F DB/67 °F WB	45	24.5	1.0

Cooling capacity tests shall be conducted in accordance with ASHRAE 33 and ARI 410. The cooling capacities shall be not less than the rated capacities as specified in Table I. Airflow through the fan-coil unit shall be measured in accordance with ASHRAE 37 and the airflow at the cabinet outlet shall be within plus or minus 5 percent of the rated airflow as specified in Table I. The airflow rating shall be determined at the ambient temperature and corrected for standard air. The water flow through the cooling coil shall be based on 45 °F entering water temperature and the flow rate shall be 3.6 gal/min/ton of cooling with a water flow equivalent pressure drop across the coil of not greater than 12 lb/in^2. The test unit shall be placed into the Code Tester Air Loop and Chilled Water Circuit and operated until thermal equilibrium is attained. The test results shall be used to calculate the unit rated

Downloaded from http://www.everyspec.com

cooling capacity in accordance with ASHRAE 33 and ARI 410.

4.5.2.2 Condensation. Fan-coil units subjected to capacity tests of 4.5.2.1 shall be fitted with uninsulated plexiglass access panels for a special test at 95 °F EDB and 82 °F EWB to determine through observation if condensation forms on components downstream of the cooling coil and outside of drain pan drip area.

4.5.2.3 Performance. Government approved performance tests shall be conducted as specified in 4.5.2.4 through 4.5.2.10 on 1 size H5 and 1 size H8 fan-coil unit, with the highest rated kW heater, to determine basic heat transfer parameters for conformance to nominal capacity ranges at conditions as specified in Table I, and for development of selection information. The entering conditions shall be at enough points (including those specified in Table I for nominal capacity ranges) to enable cooling capacity tables and airflow performance curves to be produced as selection information. Cooling capacity tests and airflow measurements shall be conducted in accordance with ASHRAE 33, ARI 410, and ASHRAE 51 respectively, and with the unit inclined 15 degrees in any direction from the normal horizontal position.

4.5.2.4 Fan performance. To determine the fan performance of fan-coil units under various external static pressures at ambient temperatures, airflow test shall be conducted at both high and low fan speeds under the following conditions:

Unit size	Fan speed	External static pressure (in. w.g.)
1	High	0
	Low	0
2	High	0
	Low	0
3	High	0.10, .20, .25
	Low	.05, .10, .15
4	High	.10, .20, .25
	Low	.05, .10, .15
5	High	.10, .20, .25
	Low	.05, .10, .15
6	High	.25, .50, .75, 1.0
	Low	.10, .25, .50
7	High	.25, .50, .75, 1.0
	Low	.10, .25, .50
8	High	.25, .50, .75, 1.0
	Low	.10, .25, .50

The tests shall be conducted in accordance with ASHRAE 51. The unit shall be placed in the Code Tester Air Loop, as shown in ASHRAE 51, and equilibrium conditions established before each reading. Test information shall be taken after setting each external static pressure.

4.5.2.5 Motor tests. Motor tests shall be conducted in accordance with IEEE STD 45.

Downloaded from http://www.everyspec.com

4.5.2.6 Cooling performance. To determine the cooling performance of fan-coil units under various operating conditions, cooling capacity tests shall be conducted at 4 airflow rates under the following conditions for fully wet and fully dry air-side coil conditions with the fan running at high speed:

Unit model	Entering air temp.	Entering water temp. (°F)	Gal/Min	External static pressure (in. w.g.)
H-5	85 °F DB/71 °F WB	45	9.5	0, 0.1, 0.20, 0.25
H-5	95 °F DB/65 °F WB	50	9.5	0, 0.1, 0.2, 0.25
H-8	85 °F DB/71 °F WB	45	24.5	0.25, 0.5, 0.75, 1.0
H-8	95 °F DB/65 °F WB	50	24.5	0.25, 0.5, 0.75, 1.0

Cooling capacity tests shall be conducted in accordance with ASHRAE 33 and ARI 410 at 4 different face velocities. The test unit shall be placed into the Code Tester Air Loop and Chilled Water Circuit and operated until thermal equilibrium is attained. The duration of each test shall be 30 minutes after achieving equilibrium. Readings shall be taken at the 0, 10, 20, and 30 minute marks. The arithmetic average of these readings shall be used for test calculations. The test results shall be used to calculate the cooling capacity of all other sizes of fan-coil units in accordance with ASHRAE 33 for provision of selection data. By using the unit cooling capacity data, airside thermal resistance shall be calculated for each of the 4 airflow rates in accordance with ARI 410.

4.5.2.7 Isothermal water pressure drop. Water pressure drop through the chilled water cooling coil shall be determined under isothermal operating conditions. Water flow tests shall be conducted at 4 different water flow rates within the range per unit size specified below or up to a 12 lb/in^2 drop, whichever occurs first.

Unit size	Water flow rate range (gal/min)
1	0.5 to 6
2	1 to 8
3	2 to 12
4	3 to 16
5	4 to 20
6	5 to 28
7	6 to 32
8	10 to 50

4.5.2.8 Heater performance. The test unit shall be placed into the Code Tester Air Loop. The unit shall be operated with motor at high speed, electric heater on, and an entering air temperature of 70 °F until thermal equilibrium is attained. The test shall continue for 30 minutes after achieving equilibrium. Readings shall be taken at the 0, 10, 20, and 30 minute marks. The arithmetic average of these readings shall be used for test calculations. The following readings shall be taken during testing.

a. Barometric pressure, inches of mercury (in Hg)
b. Entering air temperature (°F)
   (1) EDB
c. Leaving air temperature (°F)
   (1) leaving dry bulb (LDB)
   (2) leaving wet bulb (LWB)
d. Ambient temperature (°F, AMB)
e. External static pressure (in. w.g.)
f. Nozzle pressure drop (in. w.g.)
g. Pressure after nozzle (in. w.g.)

Downloaded from http://www.everyspec.com

h. Nozzle air temperature (°F)
i. Nozzle area (ft^2)
j. Heater kilowatts (kW)
k. Heater voltage (V)
l. Fan motor wattage (W)
m. Fan speed (r/min)
n. Fan motor voltage (V)
o. Fan motor amperage (A)
p. Humidity ratio, pound (lb)
q. Humidity ratio at nozzle (lb)
r. Airflow rate (lb/min)
s. Airflow rate (ft^3/min)
t. Specific gravity
u. Density (lb/ft^3)
v. Ext. S.P. (in. w.g.)
w. Total air side capacity (Btu/h)
x. Net air side capacity (Btu/h)
y. Heater capacity (Btu/h)
z. Average heating capacity (Btu/h)
aa. Average kW (kW)
bb. Heat balance (percent)
cc. Motor horsepower (hp)

4.5.2.9 Over-temperature protection. Heater shall be operated at rated airflow and voltage for 30 minutes with an entering air temperature of 70 °F. The fan providing the air supply shall be shut off and the surface temperature of the heating element measured. The high limit surface temperature, at which the contacts of the over-temperature switch open, shall be not greater than 750 °F. If the surface temperature does not exceed 750 °F, the temperature at which the contacts open shall be taken.

4.5.2.10 Dielectric strength. The heater elements shall be subjected to a high potential voltage of 1880 volts, at a frequency of 60 Hz between each element and the frame, with all other electric circuits and the metal parts grounded. Each element shall withstand the above voltage for at least 1 minute. The test shall be conducted with the main electrical power disconnected and the heater at ambient room temperature.

4.5.2.11 Heater element tests. The following tests shall be performed by the manufacturer on the heater elements:

a. Insulation resistance tests 3.12.5.2.
b. Dielectric strength tests 3.12.5.3.
c. Moisture resistance tests 3.12.5.4.
d. Accelerated life tests 3.12.5.5, 4.5.2.11.1.
e. Creepage and clearance tests 3.12.5.6.

4.5.2.11.1 Accelerated life test. Accelerated life test by fusion shall be conducted as follows:

a. Support element in still air.
b. Apply rated voltage and wattage.

Downloaded from http://www.everyspec.com

c. When operating temperature is stabilized, operate at this condition for at least 30 minutes, cycling on/off at 5-minute intervals.

d. Increase voltage to the next higher increment of 5 watts per square inch of sheath heating surface area (WSIA) excluding the fins.

e. Read and record voltage and wattage, and operate the element at this level for at least 30 minutes, cycling on/off at 5-minute intervals.

f. Repeat steps d and e until element fails by fusion.

4.5.2.11.2 Accelerated life test cause for rejection. A life expectancy of less than 21,000 hours shall be cause of for rejection. When failure by fusion occurs prior to 85 WSIA, this constitutes a life expectancy of less than 21,000 hours.

4.5.2.11.3 Creepage and clearance. Any heater where there is evidence that the creepage or clearance distances are not in accordance with 3.12.5.6 when measured shall not be installed in a fan-coil unit.

4.5.2.12 Unit operation. The fan motor, electric heater, and electrical control circuitry of each fan-coil unit shall be tested at rated voltage and current to determine whether the fan, motor, heater, and controls will operate as designed. Any fan-coil unit in which any component fails to operate properly shall not be offered for delivery.

4.5.2.13 Airborne noise. Measurement of sound pressure levels (octave band, flat, unweighted) and computation of sound power levels (octave band) shall in accordance with procedures and instrumentation requirements defined in AMCA 300, and amendments to those procedures as identified herein. Procedures of AMCA 300 shall be modified to substitute the term “fan-coil unit” in place of the word “fan.” All sound measuring instrumentation shall be laboratory calibrated within one year of the date of test, excluding the reference sound source that shall comply with the laboratory calibration requirements stated in AMCA 300. A random incidence response microphone and a type I (precision) sound level meter conforming to the requirements of AMCA 300 shall be used. The fan-coil unit shall be operated at fan speed providing maximum acceptable air flow delivery and external static pressure conditions for the size unit under test, see Table I. A fan-coil unit with a dual fan speed shall be operated at high speed. A discharge duct with orifice device shall be attached to the fan-coil unit to create design external pressures where required, see Table I. When a duct section is attached to a fan-coil unit to facilitate noise measurements, it shall be a rigid, heavy gauge metal duct and/or non-perforated double wall duct to eliminate noise contributions transmitted from the duct walls. When a duct section is attached to a fan-motor unit to facilitate measurements, the duct section shall have the same interior, open cross sectional dimensions as the opening in the fan-coil unit to which it is attached. There shall be no exposed sound absorbing material on the interior or exterior surfaces of the attached ducts. No sound attenuating devices shall be installed within attached ducts sections. The fan-coil unit shall meet the requirements of MIL-STD-1474.

4.5.2.13.1 Total sound power levels for sizes 1 and 2 fan-coil units. Test and calculation procedures to determine total sound power levels for a fan-coil unit shall be performed in accordance with Figure 1 of AMCA 300.

4.5.2.13.2 Total sound power levels for sizes 3, 4, 5, 6, 7, and 8 fan-coil units. Test and calculation procedures to determine total sound power levels shall be performed in accordance with Appendix H of AMCA 300, installation type B: free inlet/ducted outlet. A discharge duct with an orifice device shall be installed to achieve design pressure see Table I. When an orifice device is installed, it shall be a quiet type that does not produce excessive flow-induced noise. The length of the discharge duct shall be such than the open end of the duct does not extend more than 3 feet beyond the edge of the casing of the fan-coil unit. The microphone travel shall be such that a direct line of sight between the microphone and the discharge opening shall be maintained.

4.5.2.13.3 Airborne noise test facility. The facility wherein measurements of fan-coil unit airborne noise are performed shall be registered in accordance with AMCA 111 as being a qualified facility in which to perform octave band sound measurements in accordance with AMCA 300.

4.5.2.14 Permeability tests. A permeability test of material used in construction of fan-coil unit shall be conducted in accordance with MIL-STD-2142, test 501.

Downloaded from http://www.everyspec.com

4.5.2.15 Group B test schedule. The schedule for Group B tests shall be performed in the following order:

a. The following tests shall be conducted concurrently: capacities (see 4.5.2.1), condensation (see 4.5.2.2), performance (see 4.5.2.3 through 4.5.2.8) and unit operation (see 4.5.2.12).

b. Motor tests (see 4.5.2.5).

c. Airborne noise (see 4.5.2.13).

d. Permeability tests (see 4.5.2.14).

4.5.3 Group C tests.

4.5.3.1 Shock. Fan-coil units shall be grade A shock tested in accordance with MIL-S-901 for grade A, type A equipment (see 6.2). Both horizontal and vertical units shall be tested in the shipboard orientation. Testing shall be conducted on the largest fan-coil unit of each configuration and extended to smaller units in accordance with MIL-S-901. Tests under group I shock blows shall be conducted with the chilled water cooling coil unit pressurized to maximum allowable design pressure, the fan operating at high speed, and the heater energized. Tests under group II shock blows shall be conducted with the unit de-energized and depressurized. The shock test shall be conducted prior to any other tests and further testing shall not be performed until the fan-coil unit passes the shock test. Fan-coil units not required to meet HI shock shall be tested to meet the requirements for grade B shock as defined in MIL-S-901.

4.5.3.1.1 Criteria of acceptance. Compliance with the following requirements shall constitute successful completion of the shock test:

a. No portion of the equipment shall come adrift or otherwise create a hazard to personnel. (Grade A and B)

b. There shall be no evidence of leakage of the chilled water cooling coil or operational malfunction of the fan, motor, or heater. (Grade A only)

c. The fan-coil unit shall pass a post shock test, functional test, and inspection in accordance with MIL-S-901. Post shock tests shall be completed prior to correcting any damage, which may have occurred during the shock test. (Grade A only)

d. After shock testing, the cooling coil of the fan-coil unit shall successfully pass a hydrostatic or pneumatic leakage test as specified in 4.5.3.2. (Grade A only)

4.5.3.2 Cooling coil leakage. The cooling coil of each fan-coil unit shall be tested in conformance with the standard hydrostatic test of ASME Boiler and Pressure Vessel Code (BPVC) at a minimum hydrostatic pressure of 300-lb/in^2 gauge (1.5 times the maximum allowable working pressure). This test shall be performed using clean fresh water. Where water would have a detrimental effect or present production problems, a pneumatic test in accordance with ASME BPVC using a minimum pneumatic pressure of 250-lb/in^2 gauge (1.25 times the maximum allowable working pressure) shall be performed. Any fan-coil unit in which there is evidence of cooling coil leakage when tested shall not be offered for delivery.

4.5.3.3 Internally excited (self-excited) vibration. Fan-coil units shall pass type II vibration tests in accordance with MIL-STD-167-1 for first and second order frequencies. The capability of the rotating components to meet the balance requirements of 3.13.2 shall be demonstrated in accordance with MIL-STD-167-1 for type II vibration for first and second order frequencies.

4.5.3.4 Environmental (externally excited) vibration. Fan-coil units shall be subjected to type I environmental vibration tests in accordance with MIL-STD-167-1 (see 4.2). The exploratory vibration test specified in MIL-STD-167-1 shall include frequencies up to and including 33 Hz at the table amplitude specified therein. Both horizontal and vertical units shall be tested in the shipboard orientation. This vibration test shall be conducted following shock testing of 4.5.3.1 including the cooling coil leakage test and before any other tests. Testing shall be conducted on the largest fan-coil unit of each configuration and extended to smaller units. The fan-coil unit shall not be damaged or malfunction be caused as a result of environmental vibration tests.

Downloaded from http://www.everyspec.com

4.5.3.5 Group C test schedule. The schedule for Group C tests shall be performed in the following order:

a. Shock (see 4.5.3.1 and 4.5.3.1.1).
b. Cooling coil leakage (see 4.5.3.2).
c. Internal excited (self-excited) vibration (see 4.5.3.3).
d. Environmental (externally excited) vibration (see 4.5.3.4).

4.6 Maintainability demonstration. The first production unit shall be examined after testing, and the capability to maintain, disassemble, and repair the unit shall be demonstrated. The demonstration shall be conducted utilizing the recommended tools and with other than expert mechanics. Evidence that maintainability of the fan-coil unit cannot be accomplished by other than expert mechanics shall be cause for failure of the demonstration. The maintainability demonstration shall include but not be limited to the following:

a. Replacement of fan motor.
b. Replacement of motor bearing.
c. Removal of air filters for servicing and replacement.
d. Replacement of cooling oil.
e. Servicing of cooling oil.

5. PACKAGING

5.1 Packaging. For acquisition purposes, the packaging requirements shall be as specified in the contract or order (see 6.2). When packaging of materiel is to be performed by DoD or in-house contractor personnel, these personnel need to contact the responsible packaging activity to ascertain packaging requirements. Packaging requirements are maintained by the Inventory Control Point's packaging activities within the Military Service or Defense Agency, or within the military service's system commands. Packaging data retrieval is available from the managing Military Department's or Defense Agency's automated packaging files, CD-ROM products, or by contacting the responsible packaging activity.

6. NOTES

(This section contains information of a general or explanatory nature that may be helpful, but is not mandatory.)

6.1 Intended use. Fan-coil units specified herein are intended to be used as an alternative to built-up air conditioning recirculation systems of a ship's heating, ventilating, and air conditioning (HVAC) system. They provide heating, cooling, and air recirculation required to satisfy compartment environmental design conditions with a savings in space and weight over built-up systems. They are standardized by size, performance, mounting designs, and mounting and connecting dimensions.

6.2 Acquisition requirements. Acquisition documents should specify the following:

a. Title, number, and date of the specification.
b. Size, type, class, grade, heater, and motor protection required (see 1.2).
c. When first article is required (see 3.1).
d. Whether nonmagnetic fan-coil units are required (see 3.2.3).
e. Painting requirements (see 3.3).
f. Repair parts required (see 3.6).
g. Whether inlet and outlet grilles are required (see 3.11.7).
h. Whether left-hand unit is required (see 3.11.12.1).
i. Whether an electric heater is required and FW rating (see 3.11.13).
j. Whether low voltage release is required (see 3.12.1).
k. Shock requirement (see 3.13.1).
l. Airborne noise performance (see 3.13.3 and Table I) and measurement (see 4.5.2.13).

Downloaded from http://www.everyspec.com

m. Conformance inspection if other than as specified (see 4.3).

n. Whether inclined cooling test is required (see 4.5.2).

o. Packaging requirements (see 5.1).

p. Shock and vibration mitigation. In addition to packaging requirements specified in the contract, all levels of packaging are to employ a shock and vibration system that will ensure parts of the unit, such as bearings, are nor damaged due to normal shock and vibration that occur during handling and shipment.

6.3 Subject term (key word) listing.

Air filters

Chilled water

Contactors (relays)

Cooling coil (type DW)

Electric heater

Fan motor

Humidistat

HVAC (heating ventilating and air conditioning)

Thermostat

6.4 Changes from previous issue. Marginal notations are not used in this revision to identify changes with respect to the previous issue due to the extent of the changes.

Downloaded from http://www.everyspec.com

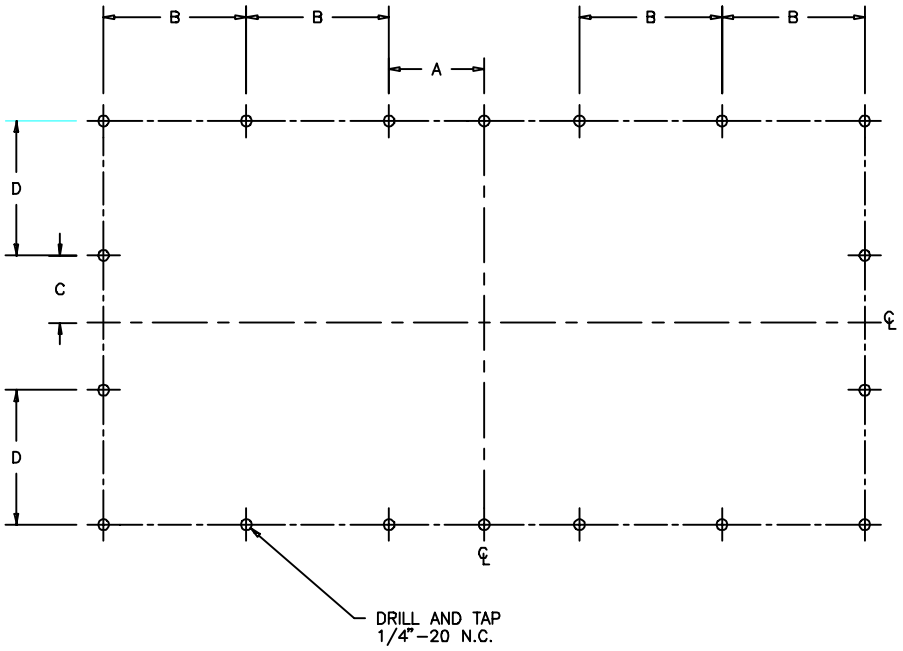

INLET FLANGE BOLTING PATTERN

UNIT SIZE	DIMENSIONS (INCHES) AND VALUES						
	A	B	NO. OF B SPACES 1/	C	D	NO. OF D SPACES 1/	TOTAL NO. OF BOLTS
1	3.5	3	2	1.5	3	2	14
2	3.5	3	2	1.5	3	2	14
3	1.5	3	4	1.5	3	2	16
4	3.5 2/	3	8	1.5	3	2	26
5	3.5	3	8	1.5	3	2	26
6	3.5	3	8	1.5	3	4	30
7	2.5	3	12	1.5	3	4	38
8	3.5	3	14	1.5	3	4	42

1/ NUMBER OF SPACES INDICATES NUMBER PER SIDE.
2/ NO HOLE ON CENTERLINE.

FIGURE 1. Fan-coil unit flanged duct connections (inlet).

Downloaded from http://www.everyspec.com

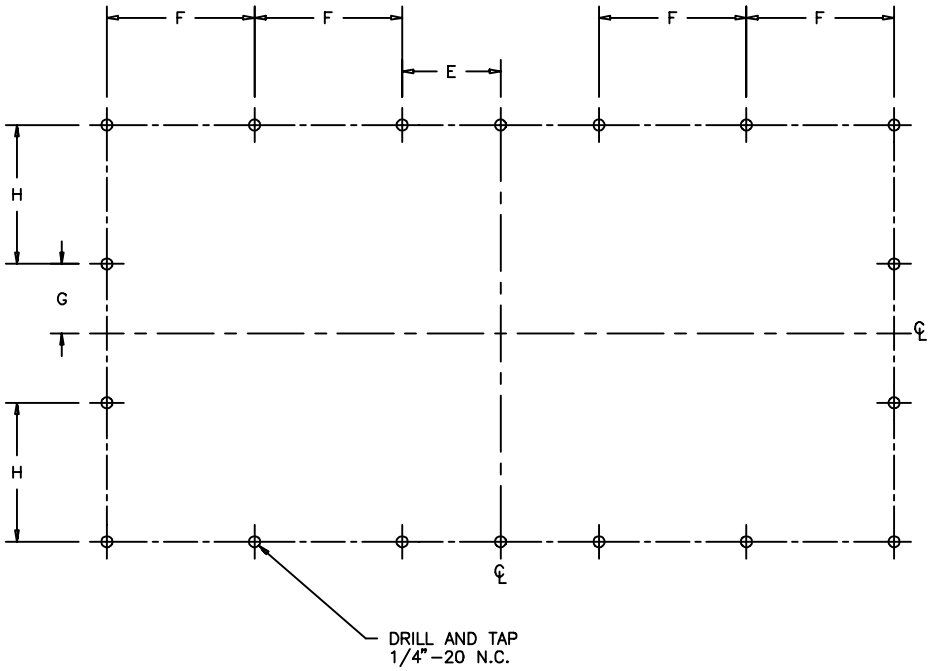

OUTLET FLANGE BOLTING PATTERN

UNIT SIZE	DIMENSIONS (INCHES) AND VALUES						
	E	F	NO. OF F SPACES 1/	G 2/	H	NO. OF H SPACES 1/	TOTAL NO. OF BOLTS
1	2.37	3	6	1.69	3	2	14
2	2.37	3	6	1.69	3	2	14
3	3.50	3	6	℄	3	2	16
4	3.50	3	8	℄	3	2	26
5	2.50	3	12	℄	3	2	26
6	3.50	3	10	1.50	3	4	30
7	2.50	3	12	1.50	3	4	38
8	2.50	3	18	1.50	3	4	42

1/ NUMBER OF SPACES INDICATES NUMBER PER SIDE.
2/ – BOLT HOLES ON CENTERLONE, NO "G" DIMENSION..

FIGURE 2. Fan-coil unit flanged duct connections (outlet).

Downloaded from http://www.everyspec.com

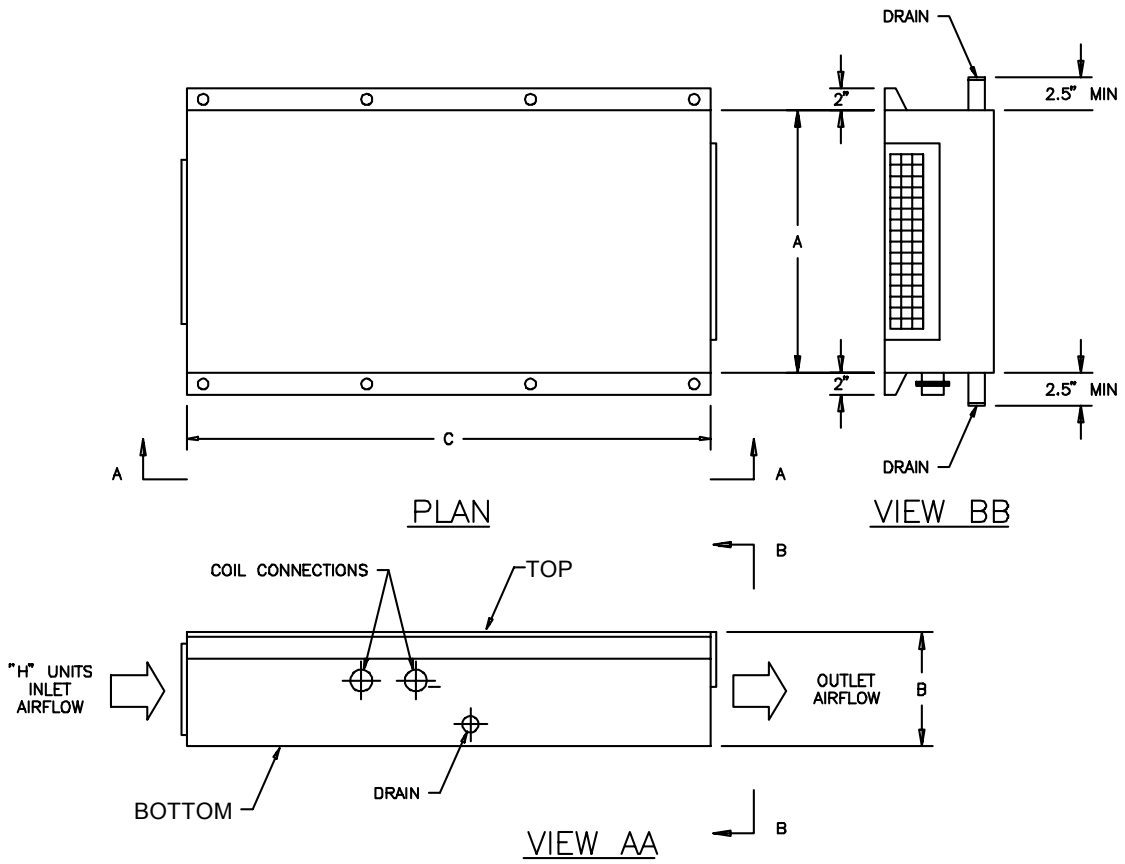

Physical layout [1/]

Unit size	Dimensions (in)			Approx. unit weight (lb) [2/]
	A	B	C	
1	25	10	50	275
2	25	10	50	285
3	27	14	52	350
4	36	14	52	420
5	44	14	52	500
6	39	17	52	500
7	52	17	52	660
8	62	17	52	780

Notes:

[1/] Cooling coil shall be field reversible to allow left or right-hand connection. Right-hand connections shall be standard, unless left-hand is required by 6.2.

[2/] Maximum gross weight in pounds (lb) with water filled cooling coil and largest electric heater as specified in Table I, installed.

FIGURE 3. Fan-coil unit interface and physical data.

Downloaded from http://www.everyspec.com

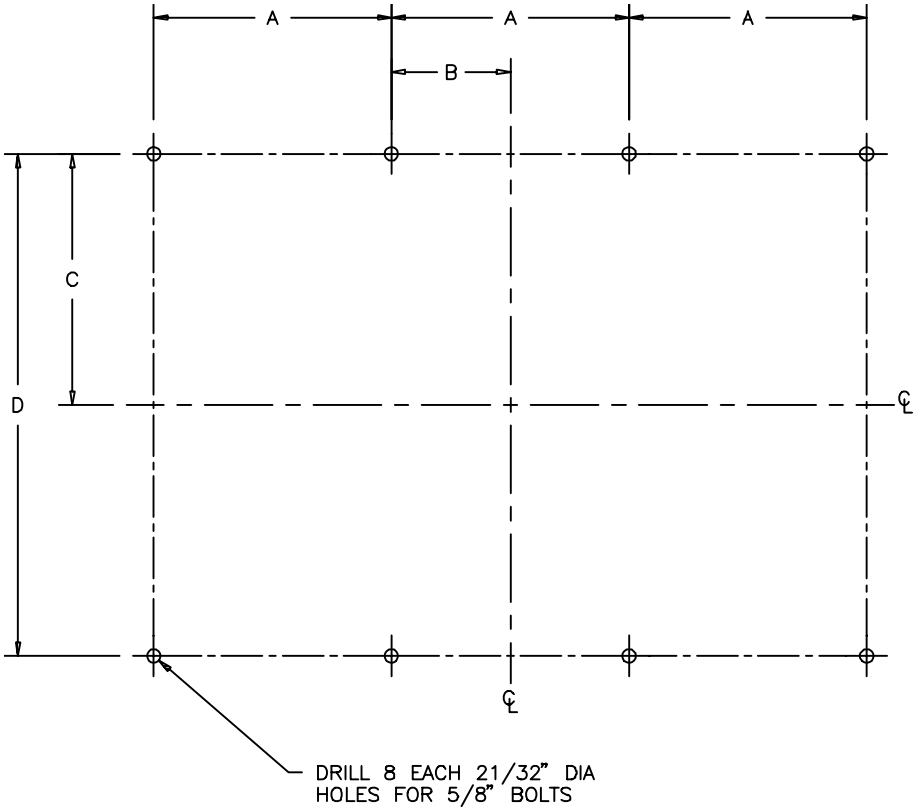

Unit size	Dimensions (in)			
	A	B	C	D
1	15	7.5	13.5	27
2	15	7.5	13.5	27
3	16	8.0	14.5	29
4	16	8.0	19.0	38
5	16	8.0	23.0	46
6	16	8.0	20.5	41
7	16	8.0	27.0	54
8	16	8.0	32.0	64

FIGURE 4. Fan-coil unit mounting plan.

Downloaded from http://www.everyspec.com

Preparing Activity:
Navy – SH
(Project 4120-1053-000)

NOTE: The activities listed above were interested in this document as of the date of this document. Since organizations and responsibilities can change, you should verify the currency of the information above using the ASSIST Online database at http://assist.daps.dla.mil.