Downloaded from http://www.everyspec.com

NOTE: The document identifier and heading has been changed on this page to reflect that this is a performance specification. There are no other changes to this document. The document identifier on subsequent pages has not been changed, but will be changed the next time this document is revised.

MIL-PRF-24139A(SH)
1 May 1984
SUPERSEDING
MIL-G-24139(SHIPS)
29 April 1965
(See 6.4)

PERFORMANCE SPECIFICATION

GREASE, MULTIPURPOSE, WATER RESISTANT

This specification is approved for use by the Naval Sea Systems Command, Department of the Navy, and is available for use by all Departments and Agencies of the Department of Defense.

1. SCOPE

1.1 Scope. This specification covers one grade of grease for multipurpose usage in applications requiring water resistance. It is to be used at temperatures ranging from 0 degrees Fahrenheit (°F) to 230°F (110 degrees Celsius (°C)) in all shipboard applications requiring dispensing through long lengths of tubing. Temperature range for use in ball and roller bearing applications is minus 20 to 250°F.

2. APPLICABLE DOCUMENTS

2.1 Government documents.

2.1.1 Specifications and standards. Unless otherwise specified, the following specifications and standards of the issue listed in that issue of the Department of Defense Index of Specifications and Standards (DoDISS) specified in the solicitation form a part of this specification to the extent specified herein.

SPECIFICATIONS

FEDERAL

P-D-680 - Dry Cleaning Solvent.

MILITARY

MIL-C-81302 - Cleaning Compound, Solvent, Trichlorotrifluoroethane.

Beneficial comments (recommendations, additions, deletions) and any pertinent data which may be of use in improving this document should be addressed to: Commander, Naval Sea Systems Command, SEA 5523, Department of the Navy, Washington, DC 20362 by using the self-addressed Standardization Document Improvement Proposal (DD Form 1426) appearing at the end of this document or by letter.

Downloaded from http://www.everyspec.com

STANDARDS

FEDERAL

FED-STD-791 - Lubricants; Liquid Fuels, and Related Products; Methods of Testing.

MILITARY

MIL-STD-102 - Anti-Friction Bearing Identification Code.
MIL-STD-105 - Sampling Procedures and Tables for Inspection by Attributes.
MIL-STD-290 - Packaging of Petroleum Related Products.

(Copies of specification and standards required by contractors in connection with specific acquisition functions should be obtained from the contracting activity or as directed by the contracting officer.)

2.2 Other publications. The following documents form a part of this specification to the extent specified herein. The issues of the documents which are indicated as DoD adopted shall be the issue listed in the current DoDISS and the supplement thereto, if applicable.

ASTM

D 217 - Cone Penetration of Lubricating Grease. (DoD adopted)
D 270 - Standard Method for Sampling Petroleum and Petroleum Products.
D 942 - Oxidation Stability of Lubricating Greases by the Oxygen Bomb Method. (DoD adopted)
D 1092 - Apparent Viscosity of Lubricating Greases. (DoD adopted)
D 1264 - Water Washout Characteristics of Lubricating Greases. (DoD adopted)
D 1478 - Low Temperature Torque of Ball Bearing Greases. (DoD adopted)
D 1743 - Corrosion Preventive Properties of Lubricating Greases. (DoD adopted)
D 2265 - Dropping Point of Lubricating Grease Over Wide Temperature Range. (DoD adopted)

(Application for copies should be addressed to ASTM, 1916 Race Street, Philadelphia, PA 19103.)

(Industry association specifications and standards are generally available for reference from libraries. They are also distributed among technical groups and using Federal agencies.)

2.3 Order of precedence. In the event of a conflict between the text of this specification and the references cited herein, the text of this specification shall take precedence.

3. REQUIREMENTS

3.1 Qualification. The grease furnished under this specification shall be products which are qualified for listing on the applicable qualified products list at the time set for opening of bids (see 4.3 and 6.3).

Downloaded from http://www.everyspec.com

3.2 Material. The grease shall be a smooth homogeneous mixture, uniform in appearance, free from lumps, abrasive materials, or otherwise undesirable fillers or impurities. It shall consist essentially of a gelling agent and a petroleum oil. This grease shall not contain additives of the solid type.

3.3 Corrosion on copper. After 24 hours exposure, the material shall show no green color, pitting or etching on copper, nor shall a brown or black stain remain on copper strip after washing with toluene or stoddard solvent, P-D-680, type I, when tested as specified in 4.5.1. A slight stain shall not be cause for rejection.

3.4 Penetration. When tested as specified in 4.5.1, the worked penetration of the grease shall be not less than 265 nor more than 320.

3.4.1 Penetration after prolonged working. When tested as specified in 4.5.1, the penetration of the grease after 100,000 double strokes shall be not more than 355.

3.5 Dropping point. When tested as specified in 4.5.1, the dropping point shall be not less than 300°F (149°C).

3.6 Performance. When tested as specified in 4.5.4, the grease shall lubricate a size 310 ball bearing for at least 2000 hours at 250°F (121°C).

3.7 Apparent viscosity. When tested as specified in 4.5.3, the apparent viscosity of the grease shall not exceed 250 poises at a shear rate of 200 reciprocal seconds and a temperature of 32°F (0°C).

3.8 Dirt. When tested as specified in 4.5.1, the grease shall not contain dirt or other foreign particles exceeding the following limits:

(a) 7500 per cubic centimeter (cm^3) of 25 micrometers diameter or above.
(b) 1600 per cm^3 of 75 micrometers diameter or above.
(c) None of 125 micrometers or above.

3.9 Oxidation stability. When tested in accordance with 4.5.1, the grease shall not cause a pressure drop exceeding 25 pounds per square inch (lb/in^2) in 500 hours on qualification tests or more than 10 lb/in^2 in 100 hours on inspection tests.

3.10 Water resistance. When tested as specified in 4.5.1, not more than 5 percent of the grease shall be washed from the bearing.

3.11 Low temperature torque. When tested as specified in 4.5.1, the grease shall not cause a starting torque exceeding 4500 gram centimeter (g-cm) or a running torque exceeding 1500 g-cm at minus 20°F (minus 6.7°C).

3.12 Bearing protection. When tested as specified in 4.5.1, the grease shall give a bearing rating of one.

3.13 Workmanship. The grease, when examined visually, shall be a smooth and homogenous mixture free from lumps and granular materials and shall not have a rancid odor.

Downloaded from http://www.everyspec.com

4. QUALITY ASSURANCE PROVISIONS

4.1 Responsibility for inspection. Unless otherwise specified in the contract or purchase order, the contractor is responsible for the performance of all inspection requirements as specified herein. Except as otherwise specified in the contract or purchase order, the contractor may use his own or any other facilities suitable for the performance of the inspection requirements specified herein, unless disapproved by the Government. The Government reserves the right to perform any of the inspections set forth in the specification where such inspections are deemed necessary to assure supplies and services conform to prescribed requirements.

4.2 Classification of inspections. The inspection requirements specified herein are classified as follows:

(a) Qualification inspection (see 4.3).
(b) Quality conformance inspection (see 4.4).

4.3 Qualification inspection. Qualification tests shall be conducted at a laboratory satisfactory to the Naval Sea Systems Command (NAVSEA). Qualification tests shall consist of all of the tests as specified in 4.5.

4.3.1 Sampling for qualification inspection. From each lot, containers shall be selected as follows, and sealed, marked and forwarded to a testing laboratory satisfactory to NAVSEA:

(a) If grease is furnished in 1.75 pound containers, 10 containers shall be furnished.
(b) If grease is furnished in 6.5 pound containers, two containers shall be furnished.

4.4 Quality conformance inspection.

4.4.1 Lot formation. A lot shall consist of all the grease produced by one manufacturer, at one plant, from the same materials and under essentially the same conditions, provided the operation is continuous and does not exceed a 24 hour period. In the event the process is a batch operation, each batch shall constitute a lot. When the containers for a production batch of grease are of different sizes, the contents of each size container shall be sampled and inspected as a separate lot.

4.4.2 Examination of filled containers. A sample of filled containers selected from each lot in accordance with MIL-STD-105 at inspection level I and acceptable quality level (AQL) = 2.5 percent defective shall be examined to verify compliance with all stipulations of this specification regarding fill, closure, marking and other requirements not involving tests. Containers shall be examined for defects of the container and the closure, for evidence of leakage, and for unsatisfactory markings; each sample filled container shall also be weighed to determine the amount of the contents. Any container in the sample having one or more defects or under required fill shall cause rejection of the container, and if the number of defective containers in any sample exceeds the acceptance number for the appropriate sampling plan of MIL-STD-105, this shall cause rejection of the lot represented by the sample.

Downloaded from http://www.everyspec.com

4.4.3 Sampling for quality conformance inspection. Samples for quality conformance inspection shall be in accordance with ASTM D 270, except for the following:

(a) If grease is furnished in 1.75-pound containers, two containers shall be furnished.
(b) If grease is furnished in 5-pound containers, one container shall be furnished.

Grease samples shall be forwarded to a laboratory satisfactory to NAVSEA. If any of the samples fails one or more of all of the tests specified in 4.5 except 4.5.4, this shall be cause for rejection of the lot.

4.5 Tests.

4.5.1 The following tests shall be performed in accordance with table I.

TABLE I. Tests.

Inspections	Requirements paragraph	Applicable FED-STD-791 method	Applicable ASTM test method	Test method 1/ paragraph
Visual examination	3.2, 3.13	----	----	4.5.2
Corrosion on copper	3.3	5309.4		
Penetration:				
worked	3.4		D 217	
after prolonged working	3.4.1		D 217	
Dropping point	3.5		D 2265	
Performance	3.6			4.5.4
Apparent viscosity	3.7		D 1092	4.5.3
Dirt	3.8	3005.3		
Oxygen stability	3.9		D 942	
Water resistance	3.10		2/ D 1264	
Low temperature torque	3.11		D 1478	
Bearing protection	3.12		D 1743	

1/ Paragraphs cited on required modifications of the applicable test method.
2/ A temperature of 100°F (38°C) 100°F shall be used.

4.5.2 Visual examination. Visual examination shall be conducted to determine conformance with the requirements of 3.2 and 3.13.

4.5.3 Apparent viscosity. The apparent viscosity of the grease shall be determined in accordance with ASTM D 1092 except that the test shall be performed in a low temperature box or bath, capable of holding the temperature of the grease at 32 ± 1.0°F (0 ± 0.5°C). The grease shall arrive at the test temperature in approximately 2 hours, and shall be maintained at the temperature for an additional 2 hours before making the viscosity determination.

Downloaded from http://www.everyspec.com

4.5.4 Performance tests.

4.5.4.1 Apparatus. The apparatus shall be as shown on figure 1 and shall consist of the following:

(a) Test spindle supported in a cast iron housing by two auxiliary bearings.
(b) Driving motor belted to the test spindle to give the spindle a speed of 3600 ± 50 revolutions per minute (r/min).
(c) Electrically heated oven thermostatically controlled to maintain the temperature of the test bearing within plus or minus 3°F of the chosen temperature.
(d) Test bearing no. shall be 111-05003-0100 in accordance with MIL-STD-102. (This bearing is single-row, radial, deep-groove, unshielded with pressed steel retainer, size 310, grade ABEC-1 with normal internal fit-up, made of SAE 52100 steel) enclosed in a housing and maintained in a position on the test spindle by a light press fit. A radial load of 150 pounds is applied to the bearing by a spring mounted outside the oven. Details of the bearing housing shall be as shown on figures 2 and 3.
(e) Covered ultrasonic cleaner with heater for cleaning test bearing.

4.5.4.2 Cleaning material. Cleaning compound, solvent, trichlorotrifluoroethane in accordance with MIL-C-81302, type II shall be used.

4.5.4.3 Preparation. For pregreased test bearings remove grease from bearing using narrow blade spatula. Test bearings are then cleaned as follows. The test bearing shall be hand washed by slowly spinning it while partially submerged in solvent conforming to MIL-C-81302. Stubborn deposits or clumps of grease can be worked with a clean brush having short, soft bristles. The bearing is then placed in the ultrasonic cleaner located in a chemical fume hood and covered with solvent. The solvent is heated to 117°F (47°C) while the ultrasonic cleaner is cleaning the bearing. The bearing is inspected occasionally. When thoroughly clean the bearing is removed from the ultrasonic cleaner while it is operating. Due to the cleaning temperature, the solvent will flash dry. The bearing is weighed. Grease is injected into the bearing using a grease gun with a needle tip having a 3/32 inch inside diameter until 30 ± 0.1 grams of grease having a specific gravity of 0.9 are uniformly distributed throughout the bearing. Grease packs for grease with specific gravity other than 0.9 is as follows:

$$\text{Grease pack (gram)} = \frac{30 \times (\text{specific gravity of grease})}{0.9}$$

Grease shall not extend beyond the face of the races. The bearing shall then be installed in the bearing housing.

4.5.4.4 Procedure. On initial start-up the testers are run for 24 hours without heaters. Then the heaters are turned on and sufficient heat is applied to bring the test bearing to the specified temperature within 2 hours. After 144 hours of operation with heat, the spindle shall be stopped and the heat turned off. After a 24-hour shutdown, the heated operating cycle shall be repeated. This operating cycle shall be continued until the specified number

Downloaded from http://www.everyspec.com

of hours has been attained or until lubrication failure occurs. During each shutdown the bearing housing shall be inspected for grease leakage, shown by grease on the face of the bearing housing or on the rod supporting the radial load. Failure of lubrication shall be considered to have occurred when any of the following conditions prevail:

(a) Tripping of motor thermal cut-out switch indicating that frictional torque has increased sufficiently to overload the motor.
(b) Locking of test bearing and belt slippage at start of test run.
(c) Excessive leakage shown by flow of grease or oil down the face of the test bearing housing or radial load rod.

The test shall be conducted on four bearings. The lubricant shall be reported as passing the test if three of the four bearings each operate satisfactorily for the number of hours specified.

4.6 Inspection of packaging. An inspection of packaging shall be performed to determine compliance with specified requirements. The lot shall consist of items, packages, or shipping containers as applicable. The unit of product shall be one item, one package, or one shipping container, as applicable. Sampling shall be performed in accordance with MIL-STD-105. The inspection level shall be level S-2, and the acceptable quality levels (AQL) shall be 4.0, expressed as defects per hundred units.

5. PACKAGING

(The preparation for delivery requirements specified herein apply only for direct Government acquisition.)

5.1 Grease shall be packaged in 14-ounce cartridges, 5-pound cans, or 35-pound containers. Packaging, packing and marking shall be in accordance with MIL-STD-290. The level of packaging and packing, and unit container quantity shall be as specified (see 6.2).

6. NOTES

6.1 Intended use. The grease covered by this specification is intended for multi-purpose use in applications where water resistance or dispensing through long lengths of tubing is required.

6.2 Ordering data. Acquisition documents should specify the following:

(a) Title, number and date of this specification.
(b) Applicable levels of packaging and packing required (see 5.1).
(c) Unit container quantity (see 5.1).

6.3 With respect to products requiring qualification, awards will be made only for products which are, at the time set for opening of bids, qualified for inclusion in Qualified Products List QPL-24139 whether or not such products have actually been so listed by that date. The attention of the contractors is called to these requirements, and manufacturers are urged to arrange to have the products that they propose to offer to the Federal Government tested for qualification in order that they may be eligible to be awarded contracts or purchase orders for the products covered by this specification. The activity

Downloaded from http://www.everyspec.com

responsible for the Qualified Products List is the Naval Sea Systems Command, SEA 55Z3, Department of the Navy, Washington, DC 20362 and information pertaining to qualification of products may be obtained from that activity. Application for qualification tests shall be made in accordance with "Provisions Governing Qualification SD-6" (see 6.3.1).

6.3.1 Copies of "Provisions Governing Qualification SD-6" may be obtained upon application to Commanding Officer, Naval Publications and Forms Center, 5801 Tabor Avenue, Philadelphia, PA 19120.

6.4 Changes from previous issue. Asterisks are not used in this revision to identify changes with respect to the previous issue, due to the extensiveness of the changes.

Preparing activity:
Navy - SH
(Project 9150-N583)

Downloaded from http://www.everyspec.com

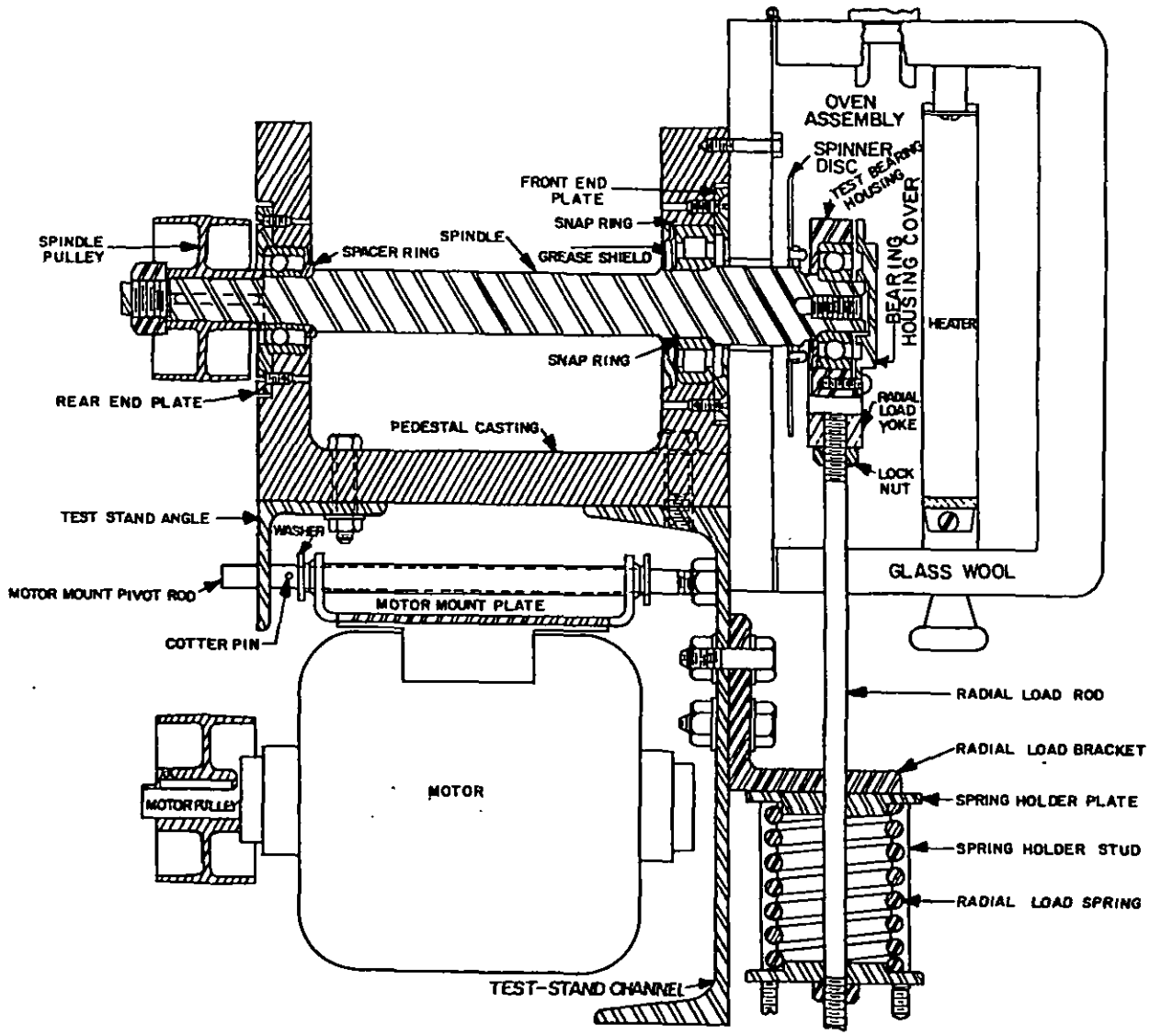

SH 8685

FIGURE 1. Performance tester for electric motor greases.

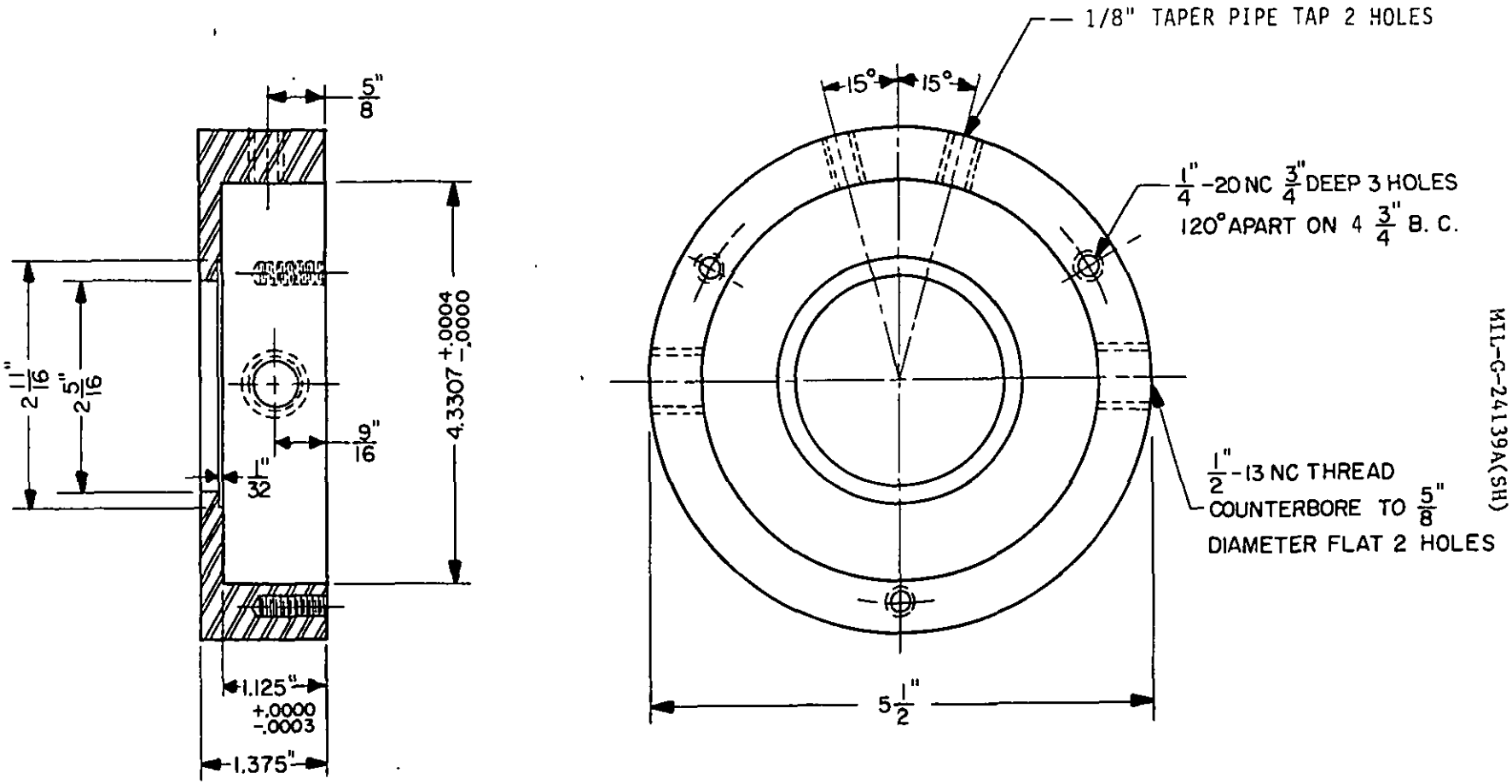

SH 8686

FIGURE 2. 310 test bearing housing.

Downloaded from http://www.everyspec.com

Downloaded from http://www.everyspec.com

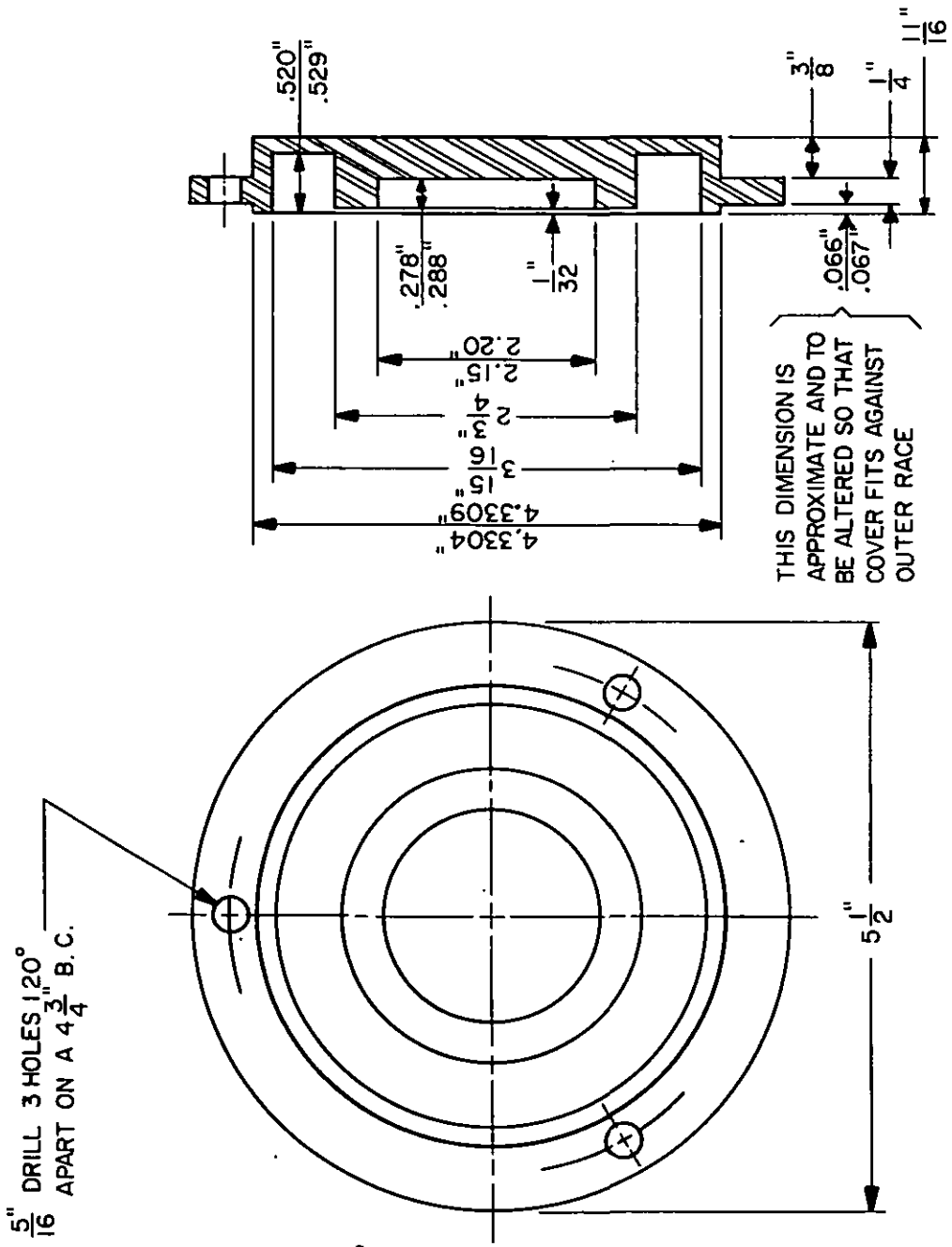

SH 8687

FIGURE 3. 310 bearing housing cover.

☆ U.S. GOVERNMENT PRINTING OFFICE: 1984—705—040/A2593

Downloaded from http://www.everyspec.com

INSTRUCTIONS: In a continuing effort to make our standardization documents better, the DoD provides this form for use in submitting comments and suggestions for improvements. All users of military standardization documents are invited to provide suggestions. This form may be detached, folded along the lines indicated, taped along the loose edge *(DO NOT STAPLE)*, and mailed. In block 5, be as specific as possible about particular problem areas such as wording which required interpretation, was too rigid, restrictive, loose, ambiguous, or was incompatible, and give proposed wording changes which would alleviate the problems. Enter in block 6 any remarks not related to a specific paragraph of the document. If block 7 is filled out, an acknowledgement will be mailed to you within 30 days to let you know that your comments were received and are being considered.

NOTE: This form may not be used to request copies of documents, nor to request waivers, deviations, or clarification of specification requirements on current contracts. Comments submitted on this form do not constitute or imply authorization to waive any portion of the referenced document*(s)* or to amend contractual requirements.

(Fold along this line)

(Fold along this line)

DEPARTMENT OF THE NAVY
COMMANDER
NAVAL SEA SYSTEMS COMMAND (SEA 5523)
DEPARTMENT OF THE NAVY
WASHINGTON, DC 20362

OFFICIAL BUSINESS
PENALTY FOR PRIVATE USE $300

NO POSTAGE NECESSARY IF MAILED IN THE UNITED STATES

BUSINESS REPLY MAIL
FIRST CLASS PERMIT NO. 12503 WASHINGTON D. C.
POSTAGE WILL BE PAID BY THE DEPARTMENT OF THE NAVY

COMMANDER
NAVAL SEA SYSTEMS COMMAND (SEA 5523)
DEPARTMENT OF THE NAVY
WASHINGTON, DC 20362

Downloaded from http://www.everyspec.com

(TO DETACH THIS FORM, CUT ALONG THIS LINE.)

STANDARDIZATION DOCUMENT IMPROVEMENT PROPOSAL

(See Instructions – Reverse Side)

1. DOCUMENT NUMBER	2. DOCUMENT TITLE
MIL-G-24139A(SH)	GREASE, MULTIPURPOSE, WATER RESISTANT

3a. NAME OF SUBMITTING ORGANIZATION	4. TYPE OF ORGANIZATION *(Mark one)*
	☐ VENDOR
b. ADDRESS *(Street, City, State, ZIP Code)*	☐ USER
	☐ MANUFACTURER
	☐ OTHER *(Specify)*:

5. PROBLEM AREAS

a. Paragraph Number and Wording:

b. Recommended Wording:

c. Reason/Rationale for Recommendation:

6. REMARKS

7a. NAME OF SUBMITTER *(Last, First, MI)* – Optional	b. WORK TELEPHONE NUMBER *(Include Area Code)* – Optional
c. MAILING ADDRESS *(Street, City, State, ZIP Code)* – Optional	8. DATE OF SUBMISSION *(YYMMDD)*

DD FORM 82 MAR 1426

PREVIOUS EDITION IS OBSOLETE.