Downloaded from http://www.everyspec.com

INCH-POUND
MIL-PRF-23648F
w/ Amendment 2
23 January 2009
SUPERSEDING
MIL-PRF-23648F
w/ Amendment 1
15 November 2006

PERFORMANCE SPECIFICATION

RESISTORS, THERMAL (THERMISTOR) INSULATED, GENERAL SPECIFICATION FOR

This specification is approved for use by all Departments and Agencies of the Department of Defense.

1. SCOPE

1.1 Scope. This specification covers the general requirements for general purpose insulated thermal resistors to be used for temperature compensation, control, and measurement over the temperature range specified.

1.2 Classification.

1.2.1 Part or Identification Number (PIN). The PIN is in the following form and as specified (see 3.1 and 6.2).

RTH06	A	S	102	G
Style (1.2.1.1)	Resistance ratio characteristic (1.2.1.2)	Lead type (1.2.1.3)	Zero-power resistance (1.2.1.4)	Zero-power resistance tolerance (1.2.1.5)

1.2.1.1 Style. The style is identified by the symbol RTH followed by a two digit number. The letters identifies general purpose thermal resistors and the number identifies the physical configuration.

1.2.1.2 Resistance ratio characteristic. The characteristic is identified by a one-letter symbol in accordance with table I.

1.2.1.3 Lead type. Thermistor lead types are identified as solderable (type S) or weldable (type W), (see 3.3.1).

Comments, suggestions, or questions on this document should be addressed to Defense Supply Center Columbus, ATTN: DSCC-VAT, Post Office Box 3990, Columbus, OH 43218-3990, or emailed to Resistor@dla.mil. Since contact information can change, you may want to verify the currency of this address information using the ASSIST Online database at http://assist.daps.dla.mil.

AMSC N/A FSC 5905

Downloaded from http://www.everyspec.com

TABLE I. Resistance ratio characteristic.

Symbol	Resistance ratio characteristic
A	19.8 ±10 percent
B	29.4 ±10 percent
C	48.7 ±10 percent
D	0.5 ±10 percent
E	0.55 ±10 percent

1.2.1.4 Zero power resistance. The direct current (dc) zero power resistance measured at 25°C and expressed in ohms identified by a three digit number. The first two digits represent significant figures, and the last digit specifies the number of zeros to follow. The standard resistance values for every decade will follow the sequence demonstrated for the "10 to 100" decade in table II. Resistance values not listed will be considered as not conforming to the specification.

Examples: 101 = 100 ohms; 102 = 1,000 ohms; 103 = 10,000 ohms; 105 = 1 megohms

* TABLE II. Standard resistance values for the 10 to 100 decade by tolerance.

1.0%	2.0% 5.0%	10.0%	1.0%	2.0% 5.0%	10.0%	1.0%	2.0% 5.0%	10.0%	1.0%	2.0% 5.0%	10.0%
10.00	10.00	10.00		-----	-----		-----	-----	59.00	-----	-----
	-----	-----		-----	-----	34.00	-----	-----		-----	-----
	-----	-----	20.00	20.00	-----		-----	-----	-----	62.00	-----
11.00	11.00	-----		-----	-----	-----	36.00	-----		-----	-----
	-----	-----	21.00	-----	-----		-----	-----		-----	-----
	-----	-----	-----	22.00	22.00		-----	-----	-----	68.00	68.00
	12.00	12.00		-----	-----	-----	39.00	39.00		-----	-----
13.00	13.00	-----	-----	24.00	-----		-----	-----	75.00	75.00	-----
	-----	-----		-----	-----	-----	43.00	-----		-----	-----
14.00	-----	-----		-----	-----		-----	-----		-----	-----
	-----	-----		-----	-----		-----	-----	-----	82.00	82.00
15.00	15.00	15.00	-----	27.00	27.00	-----	47.00	47.00		-----	-----
	-----	-----	28.00	-----	-----		-----	-----		-----	-----
	-----	-----		-----	-----	-----	51.00	-----	-----	91.00	-----
	-----	-----	-----	30.00	-----		-----	-----		-----	-----
-----	18.00	18.00		-----	-----		-----	-----	-----	-----	-----
	-----	-----		-----	-----	-----	56.00	56.00	-----	-----	-----
-----	-----	-----	-----	33.00	33.00			-----	-----	-----	-----

1.2.1.5 Zero power resistance tolerance. The zero power resistance tolerance is identified by a single letter in accordance with table III.

Downloaded from http://www.everyspec.com

TABLE III. Resistance tolerance versus temperature for each resistance tolerance.

Sequence	Temperature	F (1) (± percent)	G (2) (± percent)	J (5) (± percent)	K (10) (± percent)
1	-55	1/ 10 (15)	1/ 12 (17)	1/ 15 (20)	1/ 20 (25)
2	-15	1/ 5 (9)	1/ 6 (10)	1/ 9 (13)	1/ 14 (18)
3	0	3	4	7	12
4	25	1	2	5	10
5	50	3	4	7	12
6	75	5	6	9	14
7	100	7	9	12	17
8	125	10	12	15	20
9	2/ 200	15	18	25	30
10	2/ 275	20	25	35	40

1/ The percentages in parentheses are for positive coefficient thermistors.
2/ These temperatures are not applicable styles (see 3.1).

2. APPLICABLE DOCUMENTS

2.1 General. The documents listed in this section are specified in sections 3 and 4 of this specification. The section does not include documents cited in other sections of this specification or recommended for additional information or as samples. While every effort has been made to ensure the completeness of this list, document users are cautioned that they must meet all specified requirements documents cited in sections 3 and 4 of this specification, whether or not they are listed.

2.2 Government documents.

2.2.1 Specifications, standards and handbooks. The following specifications, standards and handbooks form a part of this document to the extent specified herein. Unless otherwise specified, the issues of these documents are those cited in the solicitation or contract.

DEPARTMENT OF DEFENSE SPECIFICATION

(See supplement 1 for a list of associated specifications.)

DEPARTMENT OF DEFENSE STANDARDS

MIL-STD-202 - Test Methods Standard For Electronics and Electrical Component Parts.
MIL-STD-1285 - Marking Of Electrical and Electronic Parts.

* (Copies of these documents are available online at http://assist.daps.dla.mil/quicksearch/ or from the Standardization Document Order Desk, 700 Robbins Avenue, Building 4D, Philadelphia, PA 19111-5094.)

Downloaded from http://www.everyspec.com

* 2.3 Non-Government publications. The following documents form a part of this document to the extent specified herein. Unless otherwise specified, the issues of the documents are those cited in the solicitation or contract.

INTERNATIONAL ORGANIZATION for STANDARDS (ISO)

ISO 10012 - Measurement Management Systems: Requirements for Measurement Processes and Measuring Equipment.

(Copies of this document are available from http://www.iso.org/ or from the American National Standards Institute, 11 West 42nd Street, New York, NY 10036.)

NATIONAL CONFERENCE OF STANDARDS LABORATORIES (NCSL)

NCSL Z540.3 - Requirements for the Calibration of Measuring and Test Equipment,.

(Copies of this document are available from http://www.ncsli.org/ or from the National Conference of Standards Laboratories (NCSL) International, 1800 30th Street, Suite 305, Boulder, CO 80301-1026.)

* 2.4 Order of precedence. Unless otherwise noted herein or in the event of a conflict between the text of this document and the references cited herein (except for related specification sheets), the text of this document takes precedence. Nothing in this document, however, supersedes applicable laws and regulations unless a specific exemption has been obtained.

3. REQUIREMENTS

3.1 Specification sheets. The individual item requirements shall be as specified herein and in accordance with the applicable specification sheet. In the event of any conflict between the requirements of this specification and the specification sheet, the latter shall govern (see 6.2).

3.2 Qualification. Thermistors furnished under this specification shall be products which are authorized by the qualifying activity for listing on the applicable qualified products list (QPL) at the time of award of contract (see 4.4 and 6.3).

3.3 Interface and physical dimension requirements. The thermistors shall meet the interface and physical dimensions specified (see 3.1).

3.3.1 Terminals.

3.3.1.1 Type S (solderable). All type S terminals shall be treated to facilitate soldering. Their dimensions shall conform to the associated specification requirements (see 3.1).

3.3.1.2 Type W (weldable). All type W terminals shall be treated to facilitate welding. Dimensions shall conform to the associated specification requirements (see 3.1).

3.3.1.3 Solder dip (retinning) leads. The manufacturer may solder dip/retin the leads of product supplied to this specification provided the solder dip process (see appendix A) has been approved by the qualifying activity.

Downloaded from http://www.everyspec.com

3.3.2 Soldering flux. When soldering fluxes are required during the manufacturing process, noncorrosive fluxes shall be used unless it can shown that the corrosive elements have been satisfactorily removed or neutralized after soldering.

3.3.3 Pure tin. The use of pure tin, as an underplate or final finish is prohibited both internally and externally. Tin content of resistor components and solder shall not exceed 97 percent, by mass. Tin shall be alloyed with a minimum of 3 percent lead, by mass (see 6.9).

3.4 Zero power resistance. Each thermistor shall have a zero power resistance value within the specified tolerance of the nominal resistance value specified (see 3.1 and 4.8.2).

3.4.1 Resistance value deviations. All maximum deviations as specified in this section are to be considered absolute limits with the exception of the contact resistance adjustments.

3.5 Resistance ratio characteristic. The resistance ratio shall be as specified (see 3.1 and 4.8.3).

3.6 Solderability (if applicable). When thermistors are tested as specified in 4.8.4, the dipped surface of the leads shall be at least 95 percent covered with a new solder coating. The remaining 5 percent of the lead surface shall show only small pinholes or voids; these shall not be concentrated in one area. Bare base metal and areas where the solder dip failed to cover the original coating are indications of poor solderability, and shall be cause for failure. In case of dispute, the percent of coverage with pinholes or voids shall be determined by actual measurement of these areas, as compared to the total area (see 3.1).

3.7 Short time overload. When thermistors are tested as specified in 4.8.5, thermistors shall not arc, burn, char, or open circuit. The change in zero power resistance shall not exceed the value specified (see 3.1).

3.8 Insulation resistance. When thermistors are tested as specified in 4.8.6, the insulation resistance shall not be less than 500 megohms.

3.9 Dielectric withstanding voltage. When thermistors are tested as specified in 4.8.7, there shall be no evidence of mechanical or electrical damage, arcing, or breakdown.

3.10 Low temperature storage. When thermistors are tested as specified in 4.8.8, there shall be no evidence of mechanical damage and the change in zero power resistance shall not exceed the value specified (see 3.1).

3.11 High temperature storage. When thermistors are tested as specified in 4.8.9, the change in zero power resistance shall not exceed the value specified (see 3.1).

3.12 Dissipation constant. When thermistors are tested as specified in 4.8.10, the dissipation constant shall be as specified (see 3.1).

3.13 Thermal time constant. When thermistors are tested as specified in 4.8.11, thermal time constant shall be as specified (see 3.1).

3.14 Terminal strength. When thermistors are tested as specified in 4.8.12, thermistors shall withstand the specified pull or twist without evidence of mechanical damage. The change in zero power resistance shall not exceed the value specified (see 3.1).

Downloaded from http://www.everyspec.com

3.15 Resistance temperature characteristics. When thermistors are tested as specified in 4.8.13, the curve obtained for each thermistor shall conform to the curve specified (see 3.1) and fall within the tolerance limits specified in table III (for the appropriate tolerance characteristic) at each of the temperature points indicated in table III.

3.16 Thermal shock. When thermistors are tested as specified in 4.8.14, thermistors shall show no evidence of mechanical damage. The change in zero power resistance shall not exceed the value specified (see 3.1).

3.17 Resistance to soldering heat. When thermistors are tested as specified in 4.8.15, thermistors shall show no evidence of mechanical damage. The change in zero power resistance shall not exceed the value specified (see 3.1).

3.18 Moisture resistance. When thermistors are tested as specified in 4.8.16, thermistors shall show no signs of electrical damage, breaking, cracking, or loosening of the terminals. The change in zero power resistance shall not exceed the value specified (see 3.1). In addition, the insulation resistance shall not be less than 100 megohms minimum (see 4.8.6).

3.19 Load life. When thermistors are tested as specified in 4.8.17, thermistors shall show no evidence of corrosion or other mechanical damage. The change in zero power resistance shall not exceed the value specified (see 3.1).

3.20 High temperature exposure. When thermistors are tested as specified in 4.8.18, the change in zero power resistance after 100 hours, and after 1,000 hours shall not exceed the value specified (see 3.1).

3.21 Vibration, high frequency. When thermistors are tested as specified in 4.8.19, there shall be no evidence of mechanical damage. The change in zero power resistance shall not exceed the value specified (see 3.1).

3.22 Shock, specified pulse. When thermistors are tested as specified in 4.8.20, thermistors shall show no evidence of mechanical damage and the change in zero power resistance shall not exceed the value specified (see 3.1).

3.23 Immersion. When thermistors are tested as specified in 4.8.21, there shall be no evidence of mechanical damage. The change in zero power resistance shall not exceed the value specified (see 3.1). In addition, the insulation resistance shall be 100 megohms, minimum (see 4.8.6).

3.24 Resistance to solvents. When thermistors are tested as specified in 4.8.22, there shall be no evidence of mechanical damage and the marking shall remain legible.

3.25 Marking. Thermistors shall be marked with the PIN and the manufacturer's name, trademark, or code symbol, in accordance with MIL-STD-1285. If lack of space requires it, packages only may be marked. The following is a sample part marking:

RTH06AS102G

Downloaded from http://www.everyspec.com

3.26 Recycling, recovered, or environmentally preferable materials. Recycled, recovered, or environmentally preferable materials should be used to the maximum extent possible provided that the material meets or exceeds the operational and maintenance requirements, and promotes economically advantageous life cycle costs.

3.27 Workmanship. Resistors shall be processed in such a manner as to be uniform in quality and shall be free from any defects that will affect life, serviceability, or appearance.

4. VERIFICATION

4.1 Classification of inspections. The inspections specified are classified as follows:

a. Qualification inspection (see 4.4).

b. Conformance inspection (see 4.6).

c. Periodic group C inspection (see 4.7)

4.2 Test equipment and inspection facilities. The manufacturer shall establish and maintain a calibration system in accordance with NCSL Z540.3, ISO 10012, or equivalent system as approved by the qualifying activity.

4.3 Inspection conditions and precautions.

4.3.1 Inspection conditions. Unless otherwise specified herein, all inspections shall be in accordance with the test conditions specified in the “GENERAL REQUIREMENT” of MIL-STD-202.

4.3.2 Precautions. Adequate precautions shall be taken during inspection to prevent condensation of moisture on thermistors, except on the moisture resistance test.

4.4 Qualification. Qualification inspection shall be performed at a laboratory acceptable to the Government (see 6.3) on sample units produced with and procedures normally used in production.

4.4.1 Sample. The number of sample units comprising of thermistors to be submitted for qualification inspection shall be as specified in the appendix A to this specification. The sample shall be taken from a production run, and shall be produced with equipment and procedures normally used in production.

4.4.2 Test routine. Sample units shall be subjected to the qualification inspection specified in table IV, in the order shown. All sample units with the exception of those for group II shall be subjected to the inspection of group I. The 50 sample units from group I shall than be divided as specified in table IV for group III to group VII inclusive, and subjected to the inspection for their particular group.

4.4.3 Failures. Failures in excess of those allowed in table IV shall be cause for refusal to grant qualification.

Downloaded from http://www.everyspec.com

TABLE IV. Qualification inspection.

Inspection	Requirement paragraph	Method paragraph	Number of sample units	Allowable defects 1/
Group I				
Visual and mechanical inspection 2/ 3/	3.3, 3.25, 3.27	4.8.1	All sample units 4/	0
Zero power resistance 3/	3.4	4.8.2		
Resistance ratio characteristic 3/	3.5	4.8.3		
Group II				2
Solderability	3.6	4.8.4	12 both leads	
Resistance to solvents	3.24	4.8.22	12	
Group III				
Short time overload	3.7	4.8.5	10	
Insulation resistance	3.8	4.8.6		
Dielectric withstanding voltage	3.9	4.8.7		
Low temperature storage	3.10	4.8.8		
High temperature storage	3.11	4.8.9		
Dissipation constant 3/	3.12	4.8.10		
Thermal time constant 3/	3.13	4.8.11		
Terminal strength	3.14	4.8.12		
Group IV				2
Resistance temperature characteristic 3/	3.15	4.8.13	10	
Thermal shock	3.16	4.8.14		
Resistance to soldering heat	3.17	4.8.15		
Moisture resistance	3.18	4.8.16		
Group V				
Load life	3.19	4.8.17	10	
Group VI				
High temperature exposure	3.20	4.8.18	10	
Group VII				
Vibration, high frequency	3.21	4.8.19	10	
Shock, specified pulse	3.22	4.8.20		
Immersion	3.23	4.8.21		

1/ Failure of the same thermistor in one or more tests of a group shall be charged as a single defective thermistor.

2/ Marking (where applicable) will be considered defective only if the marking is incorrect, incomplete, or illegible.

3/ Nondestructive tests.

4/ Sample units for group II shall not be subject to group I.

Downloaded from http://www.everyspec.com

4.5 Retention of qualification. Every 12 months, the manufacturer shall verify the retention of qualification to the qualifying activity. In addition, the manufacturer shall immediately notify the qualifying activity whenever the group B inspection results indicate failures of the qualified product to meet the requirements of this specification. Verification shall be based on meeting the following requirements:

a. The manufacturer has not modified the design of the item.

b. The specification requirements for the item have not been amended so far as to affect the character of the item.

c. Lot rejection for group A inspection does not exceed the group A sampling plan.

d. The requirements for group B inspection are met.

When group B requirements are not met and the manufacturer has taken corrective action satisfactory to the Government, group B inspection retesting shall be instituted.

4.6 Conformance inspection.

4.6.1 Inspection of product for delivery. Inspection of product for delivery shall consist of group A and group B tests; however, group B tests shall not delay delivery.

4.6.1.1 Inspection lot. An inspection lot shall consist of all thermistor of the same style, resistance ratio, characteristic, lead type, and protective enclosure or coating under essentially the same conditions and offered for inspection during a period of 1 month.

4.6.2 Group A inspection. Group A inspection shall consist of the inspections specified in table V, and shall be made on the set of sample units, in the order shown. Thermistors subjected to subgroup II shall not be supplied against purchase order.

4.6.2.1 Subgroup 1. A sample of parts from each inspection lot shall be randomly selected in accordance with table VI. If one or more defects are found, the lot shall be screened and defectives removed. After screening and removal of defectives, a new sample of parts shall be randomly selected in accordance with table VI. If one or more defects are found in this second sample, the lot shall be rejected and shall not be supplied to this specification.

Downloaded from http://www.everyspec.com

4.6.2.2 Subgroup 2 (solderability). A sample of parts from each inspection lot shall be selected randomly in accordance with table VI and subjected to the subgroup 2 solderability test. The manufacturer may use electrical rejects from subgroup 1 screening tests for all or part of the samples to be used for solderability testing. If there are one or more defects, the lot shall be considered to have failed.

a. Each production lot that was used to form the failed inspection lot shall be individually submitted to the solderability test as required in 4.8.4. Production lots that pass the solderability test are available for shipment. Production lots failing the solderability test can be reworked only if submitted to the solder dip procedure in 4.6.2.2b.

b. The manufacturer submits the failed lot to a 100 percent solder dip using an approved solder dip process in accordance with 3.3.1.3. Following the solder dip, the electrical measurements required in group A, subgroup 1 tests shall be repeated on 100 percent of the lot. Lot acceptance criteria shall be as for subgroup 1. Additional samples shall be selected in accordance with table VI and subjected to the solderability test with zero defects allowed. If the lot fails this solderability test, the lot may be reworked a second time and retested. If the lot fails the second rework, the lot shall be considered rejected and shall not be furnished against the requirements of the specification.

TABLE V. Group A Inspection.

Inspection	Requirement paragraph	Method paragraph	Sampling procedure
Subgroup 1			
Visual and mechanical examination			
Body dimensions	3.3		
Diameter and length of leads	3.3	4.8.1	4.6.2.1
Marking 1/	3.25		
Workmanship	3.27		
Zero power resistance	3.4	4.8.2	
Resistance ratio characteristic	3.5	4.8.3	
Subgroup 2 2/			
Solderability	3.6	4.8.4	4.6.2.2

1/ Marking defects shall be charged only for illegible or incomplete marking. Any subsequent electrical defect shall not be charged as a marking defect.

2/ The manufacturer may request the deletion of the subgroup 2 solderability test, providing an in line process control system for assessing the solderability of leads can be validated and approved by the qualifying activity. Deletion of the test does not relieve the manufacturer from meeting this test requirement in case of dispute. If the design, material, construction, or processing of the part is changed or if there are any problems, the qualifying activity may require resumption of the test.

Downloaded from http://www.everyspec.com

TABLE VI. Group A sampling plan.

Lot size	Subgroup 1 sample size	Subgroup 2 sample size
1 to 4	100 percent	5
5 to 125	100 percent	5
126 to 3200	125	5
3,201 to 10,000	125	8
10,001 to 35,000	294	13
35,001 to 150,000	294	20
150,001 to 500,000	345	20
500,001 and over	435	20

4.6.2.2.1 Disposition of samples. The solderability test is considered a destructive test and samples submitted to the solderability test shall not be supplied on the contract.

4.6.3 Group B inspection. Group B inspection shall consist of the test specified in table VII in the order shown. They shall be performed on sample units that have passed the group A tests, unless the Government considers it more practical to select a separate sample from the lot for group B inspection.

TABLE VII. Group B inspection. 1/

Inspection	Requirement paragraph	Method paragraph
Subgroup 1		
Short time overload	3.7	4.8.5
Insulation resistance	3.8	4.8.6
Dielectric withstanding voltage	3.9	4.8.7
Low temperature storage	3.10	4.8.8
High temperature storage	3.11	4.8.9
Subgroup 2		
Resistance to solvents	3.24	4.8.22

1/ If the manufacturer can demonstrate that this test has been performed five consecutive times with zero failures, the frequency of this test, with the approval of the qualifying activity, can be performed on an annual basis. If the design, material, constructions, or processing of the part is changed, or if there are any quality problems or failures, the qualifying activity may require resumption of the original test frequency.

Downloaded from http://www.everyspec.com

4.6.3.1 Subgroup 1. A sample of parts shall be randomly selected in accordance with table VIII. If one or more defects are found, the lot shall be screened and defectives removed. After screening and removal of defectives, a new sample of parts shall be randomly selected in accordance with table VIII. If one or more defects are found in the second sample, the lot shall be rejected and shall not be supplied to this specification.

TABLE VIII. Group B sampling plan.

Lot size	Sample size
1 to 25	3
26 to 50	5
51 to 90	6
91 to 150	7
151 to 280	10
281 to 500	11
501 to 1,200	15
1,201 to 3,200	18
3,201 to 10,000	22
10,001 and over	29

4.6.3.2 Subgroup 2. Twelve samples shall be selected randomly from each inspection lot. If one or more defects are found, the lot shall be screened and defectives removed. After screening and removal of defectives, a new sample of twelve parts shall be randomly selected. If one or more defects are found in the second sample, the lot shall be rejected and shall not be supplied to this specification.

4.6.3.3 Disposition of sample units. Sample units that have passed group B inspection shall not be delivered on the contract or purchase order.

4.7 Periodic inspection. Periodic inspection shall consist of group C inspection. Except where the results of these inspections show noncompliance with the applicable requirements (see 4.7.4), delivery of products which have passed group A and B inspections shall not be delayed pending the results of these periodic inspections.

4.7.1 Group C inspection. Group C inspection shall consist of the tests specified in table IX, in the order shown. They shall be performed on sample units of each style and characteristic selected from lots that have passed group A and group B inspections. The sample units used in group B inspection are not to be used in group C inspection.

Downloaded from http://www.everyspec.com

TABLE IX. Group C inspection.

Inspection	Requirement paragraph	Method paragraph	Number of sample units to be tested
Monthly 1/			
Dissipation constant	3.12	4.8.10	
Thermal time constant	3.13	4.8.11	10
Terminal strength	3.14	4.8.12	
Quarterly - Subgroup 1 1/			
Resistance temperature characteristic	3.15	4.8.13	
Thermal shock	3.16	4.8.14	10
Resistance to soldering heat	3.17	4.8.15	
Moisture resistance	3.18	4.8.16	
Quarterly - Subgroup 2			
Load life	3.19	4.8.17	10
Quarterly - Subgroup 3 1/			
High temperature exposure	3.20	4.8.18	10
Semiannually 2/			
Vibration, high frequency	3.21	4.8.19	
Shock, specified pulse	3.22	4.8.20	10
Immersion	3.23	4.8.21	

1/ If the manufacturer can demonstrate that these tests have been performed for five consecutive times with zero failures, these tests, with the approval of the qualifying activity, can be deleted. The manufacturer however, shall perform these tests every three years after the deletion as part of long term design verification. If the design, material, construction, or processing of the part is changed, or if there are any problems, the qualifying activity may require resumption of the specified testing. Deletion of testing does not relieve the manufacturer from meeting the test requirement in case of dispute.

2/ If the manufacturer can demonstrate that these tests have been performed for five consecutive times with zero failures, these tests, with the approval of the qualifying activity, can be deleted. The manufacturer however, shall perform these tests every five years after the deletion as part of long term design verification. If the design, material, construction, or processing of the part is changed, or if there are any problems, the qualifying activity may require resumption of the specified testing. Deletion of testing does not relieve the manufacturer from meeting the test requirement in case of dispute.

4.7.2 Sampling plan.

4.7.2.1 Monthly. Ten sample units of any resistance value shall be inspected monthly with one defective unit allowed. If more than one sample fails the monthly tests, double the quantity of samples required shall be inspected with no defective units allowed.

4.7.2.2 Quarterly. Thirty sample units of any zero power resistance between the middle value and the highest value for which qualification is sought shall be inspected quarterly. Ten sample units shall be subjected to the tests of group 1, and ten sample units of the value closest to the value above the middle value shall be subjected to the tests of subgroup 2. In addition, ten sample units shall be subjected to the tests of subgroup 3. One defective unit will be allowed for each subgroup, but not more than one defective for the three groups combined.

Downloaded from http://www.everyspec.com

4.7.2.3 Semiannually. Ten sample units of the highest resistance value shall be inspected semiannually, with one defective unit allowed.

4.7.3 Disposition of sample units. Sample units which have been subjected to group C inspection shall not be delivered on the contract or purchase order.

4.7.4 Noncompliance. If a sample fails to pass group C inspection, the supplier shall take corrective action on the materials or processes, or both, as warranted, and on all units of product which can be corrected and which were manufactured under essentially the same conditions, with essentially the same materials, and processes, and which are considered subject to the same failure. Acceptance of the product shall be discontinued until corrective action, acceptable to the Government, has been taken. After the corrective action has been taken, group C inspection shall be repeated on additional sample units (all inspections or the inspection the original sample failed, at the option of the Government). Group A and group B inspection may be reinstituted; however, final acceptance shall be withheld until group C reinspection has shown corrective action was successful. In the event of failure after reinspection, information concerning the failure and the corrective action taken shall be furnished to the contracting officer.

4.8 Methods of inspections.

4.8.1 Visual and mechanical inspection. Thermistors shall be inspected to verify that the design, construction, physical dimensions, marking, and workmanship are in accordance with this specification (see 3.1).

4.8.2 Zero power resistance (see 3.4 and 6.8.3).

4.8.2.1 Measurements. All resistance measurements shall be made in a controlled uniform medium capable of maintaining accuracy in temperature of:

a. ±0.01°C for beads, beads in rods, and beads in probes.

b. ±0.05°C for all other types.

4.8.2.2 Equipment sensitivity.

a. Resistance: A wheatstone bridge, or equivalent, accuracy to ±0.05 percent or better.

b. Temperature: The time response of the temperature indicator shall be compatible with that of the thermistor being tested.

4.8.2.3 Test procedure. The test procedure shall be as follows:

a. Mounting: Resistance shall be mounted by normal means in corrosion resistant clips mounted on 0.125 inch (3.17 mm) diameter brass rods.

(1) Beads: Flat noncorrosive clips shall be used. Grip the leads .250 inch ±.0625 inch (6.35 mm ±1.587 mm) from the end of thermistor body.

(2) All other types: Use corrosion resistant clips. Grip the leads 1.0 inch ±.0625 inch (25.4 mm ±1.587 mm) from the end of the thermistor body.

Downloaded from http://www.everyspec.com

b. Mounting plates: Use Micarta, polytetrafluoroethylene, or equivalent, insulating material.

c. Temperature stabilization: Allow enough time for medium and thermistor to stabilize at required temperatures.

d. Measurements: Measure zero power resistance at 25°C and 125°C. With the input voltage disconnected, adjust the output indicator to the zero output position. Connect input voltage source and measure zero power resistance. Disconnect the voltage source. If the output does not return to its initial zero output position to within a tolerance equivalent to ±0.05 percent of the resistance value, the thermistor shall be classified as defective.

4.8.3 Resistance ratio characteristic (see 3.5 and 6.8.4). Compute the resistance ratio using the zero power resistance measurement at 25°C and 125°C (see 4.8.2).

4.8.4 Solderability (see 3.1 and 3.6). Thermistors shall be tested in accordance with method 208 of MIL-STD-202. The following details shall apply. Two terminal leads of each thermistor shall be tested (see tables III).

4.8.5 Short time overload (see 3.7).

4.8.5.1 Test procedures. The test procedure shall be as follows:

a. Obtain zero power resistance at 25°C.

b. Mounting: See 4.8.2.3a.

c. Provide a filtered regulated dc power supply or battery.

d. Ambient: Room temperature.

e. Using the value of dissipation constant and nominal resistance value specified (see 3.1), compute the average value of E_{th} and I_{th} required to raise the thermistor to the maximum power rating. Place the unit in a circuit accomplishing this.

f. Energize the circuit for 5 minutes.

g. De-energize the circuit for 10 minutes. Repeat this operation for ten complete cycles.

h. Examine thermistor for evidence of arcing, burning, or charring.

i. Sixty minutes removal from circuit, the zero power resistance shall again be measured as specified in 4.8.2 (see 3.7).

Downloaded from http://www.everyspec.com

4.8.6 Insulation resistance (see 3.8). Thermistors shall be tested in accordance with method 302 of MIL-STD-202. The following details shall apply:

a. Method of mounting: As specified in 4.8.7.1.

b. Test condition letter: A.

c. Points of measurement: Between the thermistor terminals connected together and the V-block.

4.8.7 Dielectric withstanding voltage (see 3.9).

4.8.7.1 Atmospheric pressure. Thermistors shall be tested in accordance with method 301 of MIL-STD-202. The following details and exceptions shall apply:

a. Special preparations: Thermistors shall be clamped in the trough of a 90 degree metallic V-block of such size that the body of the thermistor does not extend beyond the extremities of the V-block. The thermistor leads shall be so positioned that the distance between them and any point of the V-block is not less than the radius of the lead wire.

b. Nature of potential: An ac supply at commercial line frequency (not more than 100 cycles per second) and waveform.

c. Duration of application of test voltage: Maximum voltage to be applied for 2 minutes – 500 volts.

d. Rate of application of test voltage: 100 volts per second.

e. Points of application of test voltage: Between the thermistor terminals (connected together) and the V-block.

f. Inspection after test: Thermistors shall be inspected for evidence of mechanical damage, arcing, and breakdown.

4.8.7.2 At reduced barometric pressure. Following the tests specified in 4.8.7.1, thermistors shall be tested in accordance with method 105 of MIL-STD-202. The following details shall apply:

a. Method of mounting: As specified in 4.8.7.1a.

b. Test condition letter: C.

c. Magnitude of test voltage: 200 volts.

d. Nature of potential: As specified in 4.8.7.1b.

e. Points of application of test voltage: As specified in 4.8.7.1f.

f. Duration of application of test voltage: 2 minutes.

Downloaded from http://www.everyspec.com

4.8.8 Low temperature storage (see 3.10).

a. Mounting: Mounting in accordance with 4.8.2.3a is optional. Thermistors should be isolated from metal surface of cold boxes.

b. Procedure: Zero power resistance shall be measured at 25°C as specified in 4.8.2. Within 1 hour after this measurement, the thermistors shall be placed in a cold chamber at room temperature. The temperature shall be reduced to -62°C ±3°C, and the thermistor maintained at that temperature for a period of not less than 3 hours. (For conformance inspection only, at option of the supplier, the thermistor may be placed in the cold chamber when it is already at the extreme low temperature.) The thermistors shall then be removed from the chamber and stabilized at room temperature. The final zero power resistance at 25°C shall be measured as specified in 4.8.2, not less than 1 hour from termination of the test and within a 24 hour period. The thermistors shall then be examined for mechanical damage.

4.8.9 High temperature storage (see 3.11). Measure the zero power resistance of all test samples.

a. Mounting: Mounting in accordance with 4.8.2.3.a is optional. Thermistors should be isolated from metal surfaces of ovens.

b. Temperature: The temperature shall be within ±2 percent (in °C) of the maximum operating temperature specified (see 3.1).

c. Load condition: No load.

d. Duration: Test duration shall be 100 hours.

e. Resistance measurement: Measure and record zero power resistance 1 hour to 24 hours later in an ambient temperature 25°C.

4.8.10 Dissipation constant (see 3.12 and 6.8.8).

4.8.10.1 Test procedure. The test procedure shall be as follows:

a. Measure zero power resistance at 25°C and 75°C (see 4.8.2).

b. Mounting: See 4.8.2.3.a.

c. Power supply: Use a dc regulated or battery power supply.

d. Place thermistors in a still air controlled chamber with a minimum volume of 1,000 times the thermistor body and test fixture. Chamber temperature: 25°C ±1°C.

e. Loading (see figure 1): Adjust E_{th} and I_{th} for zero power resistance values of 75°C. Keep load for maximum of 15 minutes.

Downloaded from http://www.everyspec.com

f. Voltage and current measurements shall be performed with a high impedance measuring circuit of an accuracy ±1 percent or better.

g. Record I_{th} and E_{th}.

h. Compute and record the dissipation constant:

$$\frac{P}{50} = \frac{E_{th} \times I_{th}}{75°C - 25°C} \quad \text{(milliwatts/°C)}$$

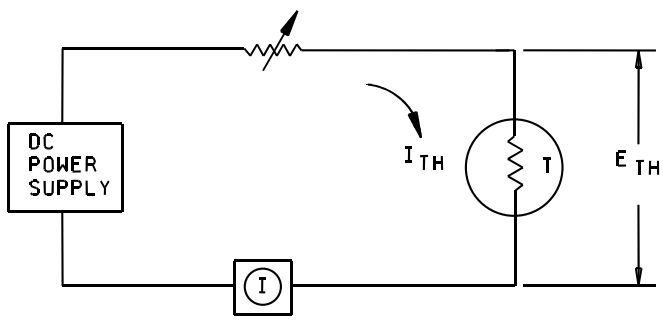

FIGURE 1. Measuring circuit.

4.8.11 Thermal time constant (see 3.13, 6.8.9, and figure 2).

4.8.11.1 Disks, rods, and beads. The test procedure shall be as follows:

a. Measure and record zero power resistance at 43.4°C and 75°C (see 4.8.2).

b. Mounting: See 4.8.2.3.a.

c. Power supply: Use a dc regulated power supply or battery.

d. Place thermistors in a still air controlled chamber with a minimum volume of 1,000 times the thermistor body and test fixture.

e. With switch AA closed, adjust E_{th}/I_{th} ratio equal to the zero power resistance at 75°C. Allow 15 minutes (maximum) for stabilization of thermistors.

f. Set bridge (see figure 2) for null with the zero power resistance value measured at 43.4°C in 4.8.11.1a.

g. Prepare to measure time from the instant the switch is thrown to position BB to the time the bridge indicator passes through the null point. Throw switch to BB position and record time.

h. Chamber temperature: 25°C ±1°C.

Downloaded from http://www.everyspec.com

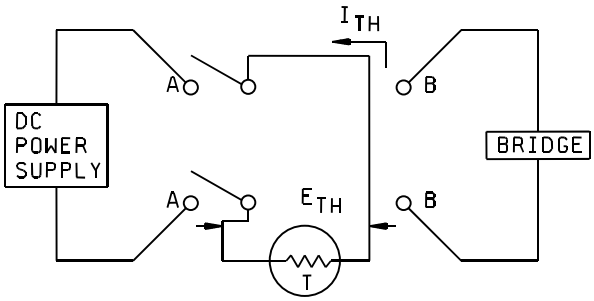

FIGURE 2. Test circuits for time constant of thermistors.

4.8.11.2 Bends in probes and bends in rods. The test procedure shall be as follows:

a. Perform steps 4.8.11.1.a, b, d, g.

b. Use test circuit (see figure 3).

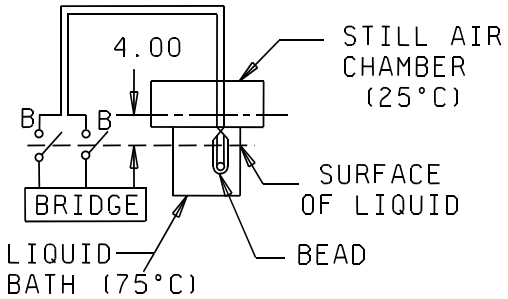

FIGURE 3. Test circuits for time constant of thermistors.

c. Submerge the entire thermistor in a temperature controlled (75°C ±1°C) bath of low viscosity liquid such as Dow Corning 1000 or approved equivalent, with a viscosity of one centipoise. The medium must not be subject to surface evaporation when the thermistors are removed.

d. Locate a still air test chamber over 75°C ±1°C bath. This chamber must have a volume of at least 1,000 times the thermistor body and test fixture combined, and must be maintained at 25°C ± 1°C. With a controlled drive mechanism or other means, lift the thermistors from the bath into the air chamber at a uniform speed of 2 inches ±.250 inch (50.8 mm ±6.35 mm) per second.

Downloaded from http://www.everyspec.com

e. The vertical travel of the thermistor shall be 4 inches ± 1 inch (101.6 mm ±25.4 mm) from the surface of the liquid bath.

f. Start measuring time at the instant the thermistor bead (contained in the probe or rod) leaves the surface of the bath. Note the time from this instant to the time when bridge null is reached.

NOTE: A low persistence screen oscilloscope with graduated time scale may be used.

g. Record this time: This is the time constant of the thermistor.

4.8.12 Terminal strength (see 3.14).

4.8.12.1 Disk and all bead type thermistors. Zero power resistance shall be measured at 25°C as specified in 4.8.2. Thermistors shall then be firmly clamped, and a pull as specified (see 3.1) shall be applied to each terminal, (one at a time) in accordance with method 211 of MIL-STD-202, test condition A. Zero power resistance shall be again measured as specified in 4.8.2. Thermistors shall be inspected for evidence of mechanical damage.

4.8.12.2 Rod type thermistors. Zero power resistance shall be measured in 4.8.2. Thermistors shall then be firmly clamped and a pull as specified (see 3.1) shall be applied to each terminal (one at a time) in accordance with method 211 of MIL-STD-202, test condition A and test condition D. Zero power resistance shall again be measured as specified 4.8.2; the thermistor shall then be inspected for evidence of mechanical damage.

4.8.13 Resistance temperature characteristic (see 3.15). The thermistors shall be stabilized at each of the ambient temperatures listed in table III. Zero power resistance measurements shall be made in accordance with 4.8.2 at each specified temperature, after a stabilization time equal to or not less than ten times the applicable thermal time constant (see 3.1). Zero power resistance shall be tabulated for each measurement.

4.8.14 Thermal shock (see 3.16). Thermistors shall be tested in accordance with method 107 of MIL-STD-202. The following details and exceptions shall apply:

a. Mounting: See 4.8.2.3.a.

b. Measurement before cycling: Zero power resistance shall be measured at 25°C as specified in 4.8.2.

c. Test condition letter: B – for thermistors rated at 125°C; C- for thermistors rated at 200°C; C – for thermistors rated at 275°C.

d. Climate chamber: The rate of temperature change within the climate chamber shall not be less than 2°C per minute. The temperature shall be maintained at each of the extreme temperatures by means of circulating air. The air temperature shall be measured by a method and as near the center of the group of thermistors as possible.

Downloaded from http://www.everyspec.com

e. When two climate chambers are used: The thermistors may be transferred from one chamber to another, in which case, they shall be kept at room temperature for not less than 10 minutes and not more than 15 minutes between exposure, to the extreme temperatures.

f. Measurement after cycling: Not less than 1 hour, but within a 24 hour period after the last cycle, zero power resistance shall be measured outside the chamber as specified in 4.8.2.

g. Inspection after the test: Thermistors shall be inspected for evidence of mechanical damage.

4.8.14.1 Beads, beads in rods, and beads in probes. The thermistor shall be preconditioned by being immersed in water at a temperature of 100°C +0°C, -5°C for a minimum of 15 seconds. Immediately upon conclusion of the precondition time, the thermistor shall be transferred to water at a temperature of 0°C +5°C, -0°C. The temperature shall remain at low temperature for minimum of 5 seconds. The thermistor shall then be transferred to water at a temperature of 100°C +0°C, -5°C. The thermistor shall remain at the high temperature for a minimum of 15 seconds. Transfer time between baths shall be less than 3 seconds. The duration of this test shall be 5 complete cycles.

4.8.15 Resistance to soldering heat (see 3.1 and 3.17). Thermistors shall be tested in accordance with method 201 of MIL-STD-202. The following details and exceptions shall apply:

a. Measurement before test: Zero power resistance shall be measured as specified in 4.8.2.

b. Special preparation of specimen: Sample units shall not have been soldered during any of the previous tests.

c. Depth of immersion in the molten solder: To a point .125 inch to .1875 inch (3.17 mm to 4.7625 mm) from the thermistor body.

d. Temperature of solder: 300°C ±10°C.

e. Duration of immersion: 2 seconds ±0.5 second.

f. Cooling time prior to final inspections and measurements: 24 hours ±4 hours.

g. Inspection and measurement after test: Thermistors shall be inspected for evidence of mechanical damage and zero power resistance shall be measured as specified in 4.8.2.

4.8.16 Moisture resistance (see 3.18). Thermistors shall be tested in accordance with accordance with method 106 of MIL-STD-202. The following exceptions shall apply:

a. Mounting: Thermistors shall be soldered by their leads to insulated stand off terminals on a suitable panel so that there will be at least 1 inch (25.4 mm) of free air space around each thermistor. The spacing of the mounts shall be such that the length of each thermistor lead is .750 inch (maximum) (19.05 mm) when measured from the edge of the supporting terminal to the thermistor body.

b. Initial measurements: Not less than one and one half hours after thermistors have been removed from the drying oven, the resistance shall be measured at 25°C as specified in 4.8.2.

Downloaded from http://www.everyspec.com

c. Loading: During the first two hours of step 2 and step 5 of MIL-STD-202, a test potential which will maintain the thermistors at their maximum power specified (see 3.1), shall be applied to 50 percent of the thermistors. The remaining 50 percent of the thermistors will be tested without any application of voltage.

d. Final measurements: Upon completion of step 6 of MIL-STD-202 of the final cycle, the thermistors shall be held at the high humidity state conditions and a temperature of 25°C ±2°C for a period of one and one-half hours to three and one-half hours. Thermistors shall be removed from the chamber, and within 24 hours the insulation resistance measured (see 4.8.6). Zero power resistance tests shall be performed as specified in 4.8.2 within 24 hours. The sample units shall not be subjected to forced circulating air during tests.

4.8.17 Load life (see 3.19). Thermistors shall be tested in accordance with method 108 of MIL-STD-202. The following details and exceptions shall apply:

a. Method of mounting: Mounting shall be as specified in 4.8.2.3.a and 4.8.2.3b. Thermistor location shall be arranged so that the temperature of any one thermistor shall not appreciably influence the temperature of any other thermistor. There shall be no circulation of air over the thermistors other than that caused by the heat of the thermistors.

b. Ambient test temperature and tolerance: 25°C +5°C, -0°C.

c. Initial measurement: Zero power resistance shall be measured at temperature of 25°C in accordance with 4.8.2.

d. Test circuit: See figure 1.

e. Operating conditions: Apply the maximum power specified (see 3.1) intermittently, one and one-half hours “on” and one-half hour “off” for 1,000 hours.

f. Test condition letter: D.

g. Measurements during test: The zero power resistance shall be measured as specified in 4.8.2, at the end of each of the one half hour “off” periods, after 250 hours ±12 hours, 500 hours ±12 hours, 750 hours ±12 hours, and 1,000 hours ±12 hours have elapsed.

h. Inspection after test: Thermistors shall be inspected for evidence of mechanical damage.

4.8.18 High temperature exposure (see 3.20). Thermistors shall be maintained at the applicable maximum temperature (see 3.1) for 1,000 hours +20 hours, -0 hours. Zero power resistance will be measured at 25°C after 100 hours +10 hours, -0 hours, and at the end of the test. These measurements shall be taken after stabilization at 25°C not to exceed 72 hours.

Downloaded from http://www.everyspec.com

4.8.19 Vibration, high frequency (see 3.21). Thermistors shall be tested in accordance with method 204 of MIL-STD-202. The following details and exceptions shall apply:

a. Mounting: Thermistors shall be mounted on appropriate jig fixtures with their bodies restrained from movement and their leads supported at a distance of .250 inch (6.35 mm) from the thermistor body (see 6.7). These fixtures shall be constructed in a manner to insure that the points of the thermistors mounting supports will have the same motion as the vibrating table. Test leads used during this test shall be no larger than AWG size 22 stranded wire, so that the influence of the test lead on the thermistor will be held to a minimum. The test lead length shall be no greater than is absolutely necessary. A shielded cable, if required because of the field surrounding the vibration table, shall be clamped to the thermistor mounting jig. In all cases, the thermistors shall be mounted in relation to the test equipment in such a manner that the stress applied is in the direction that is considered most detrimental.

b. Initial measurement: Zero power resistance shall be measured at 25°C as specified in 4.8.2.

c. Test condition letter: D.

d. Direction of motion: In each of two mutually perpendicular directions, one perpendicular and the other parallel to the longitudinal axis of the thermistor.

e. Measurement during test: Each thermistor shall be monitored to determine electrical discontinuity by a method which shall be sensitive enough to monitor or register (automatically) any electrical discontinuity of 0.1 millisecond or greater duration.

f. Measurement after vibration: Zero power resistance shall be measured at 25°C as specified in 4.8.2.

g. Inspection after test: Thermistors shall be inspected for evidence of mechanical and electrical damage.

4.8.20 Shock, specified pulse (see 3.22). Thermistors shall be tested in accordance with method 213 of MIL-STD-202. The following details and exceptions shall apply:

a. Special mounting means: Thermistor shall be mounted on appropriate jig fixtures with their bodies restrained from movement and their leads supported at a distance of .250 inch (6.35 mm) from the thermistor body (see 6.7). These fixtures shall be constructed in a manner to insure that the points of the thermistor mounting supports will have the same motion as the shock table. Thermistors shall be mounted in relation to the test equipment in such a manner that the stress applied is in the direction which would be considered most detrimental. Test leads used during this test shall be no larger than AWG size 22 stranded wire, so that the influence of the test lead on the thermistor will be held to a minimum. The test lead length shall be no longer than necessary.

b. Test condition letter: A.

c. Measurements before shock: Zero power resistance shall be measured at 25°C as specified in 4.8.2.

Downloaded from http://www.everyspec.com

d. Number and direction of applied shocks: The thermistors shall be subjected to a total of ten shocks in each of two mutually perpendicular planes (one perpendicular and the other parallel to longitudinal axis of the thermistor).

e. Measurements during shock: Each thermistor shall be monitored to determine electrical discontinuity by a method which shall at least be sensitive enough to monitor or register automatically any electrical discontinuity of 0.1 millisecond or greater duration.

f. Measurement after shock: Zero power resistance shall be measured at 25°C as specified in 4.8.2.

g. Inspection after test: Thermistors shall be inspected for evidence of mechanical and electrical damage.

4.8.21 Immersion (see 3.23). Thermistors shall be tested in accordance with method 104 of MIL-STD-202. The following details and exceptions shall apply:

a. Test condition letter: B.

b. Inspection after last cycle: There shall be no evidence of mechanical damage.

c. Resistance measurement: Measure zero power resistance not later than 24 hours after the last cycle as specified in 4.8.2. Within 2 hours, insulation resistance shall be performed in accordance with 4.8.6.

4.8.22 Resistance to solvents (see 3.24). Thermistors shall be tested in accordance with method 215 of MIL-STD-202. The following details shall apply:

a. Marked portion of thermistor shall be brushed.

b. The number of sample units shall be as specified in table IV and table VII, as applicable.

c. Thermistors shall be inspected for mechanical damage and legibility of markings.

5. PACKAGING

5.1 Packaging. For acquisition purposes, the packaging requirements shall be as specified in the contract or order (see 6.2). When packaging of materiel is to be performed by DoD or in-house contractor personnel, these personnel need to contact the responsible packaging activity to ascertain packaging requirements. Packaging requirements are maintained by the Inventory Control Point's packaging activity within the Military Service or Defense Agency, or within the military services system commands. Packaging data retrieval is available from the managing Military Department's or Defense Agency's automated packaging files, CD-ROM products, or by contacting the responsible packaging activity.

6. NOTES

(This section contains information of a general or explanatory nature that may be helpful, but is not mandatory.)

Downloaded from http://www.everyspec.com

6.1 Intended use. Thermistors covered by this specification are intended for use in electronic equipment, and are used for stringent environmental and electrical requirements. Thermistors covered by this specification are unique due to the fact that these devices must be able to operate satisfactorily in military systems under the following demanding conditions: 20 Gs of high frequency vibration, 100 Gs of shock (specified pulse), and undergo moisture resistance test. In addition these military requirements are verified under a qualification system. Commercial components are not designed to withstand these military environmental conditions.

6.2 Acquisition requirements. Acquisition documents must specify the following:

a. Title, number, and date of this date of this specification, the applicable associated specification, and the complete PIN.

b. Unless otherwise specified (see 2.1), the versions of the individual documents referenced will be those in effect on the date of release of the solicitation.

c. Packaging requirements (see 5.1).

* 6.3 Qualification. With respect to products requiring qualification, awards will be made only for products which are, at the time of award or contract, qualified for inclusion in the qualified products list whether or not such products have actually been so listed by that date. The attention of the contractors is called to these requirements, and manufacturers are urged to arrange to have the products that they propose to offer to the Federal Government tested for qualification in order that they may be eligible to be awarded contracts or orders for the products covered by this specification. The activity responsible for the qualified products list, and information pertaining to qualification of products may be obtained from the Defense Supply Center, Columbus (DSCC-VQP), Post Office Box 3990, Columbus, Ohio 43218-3990. An online listing of products qualified to this specification may be found in the Qualified Products Database (QPD) at http://assist.daps.dla.mil.

6.4 Critical voltage (applicable to NTC thermistors). The current voltage characteristic curve of NTC thermistors indicates that the voltage increases with increase in current normally up to a critical voltage point. Heat produced by the current at this point causes the resistance of the thermistor to decrease, thereby resulting in a voltage drop as the current increases further. A limiting series resistor (approximately 0.100 of nominal resistance value of thermistor) is used in circuits where the maximum operating temperature might be exceeded.

6.5 Materials. There are many material grades used for construction of negative temperature coefficient thermistors, for example:

a. Composed of manganese and nickel oxides.

b. Composed of manganese, nickel, and cobalt oxides.

The conductivity of each grade is characteristic of the chemical proportion of each element, and of temperature. Other semiconductor materials such as silicon or boron are used for positive temperature coefficient thermistors. The intent of this specification is not to limit the types of materials used in the construction of thermistors. However, the units must comply with the performance requirements specified.

Downloaded from http://www.everyspec.com

6.6 Flammability. It should be noted that this specification contains no requirements concerning the flammability of the material used in construction of the thermistors. Users should take this into consideration when a particular application involves this requirement.

6.7 Mounting for shock and vibration. Where thermistor bodies are restrained from movement under conditions of shock and vibration, consideration must be given to the restraining techniques effect upon the thermal characteristics of the thermistor.

6.8 Definitions.

6.8.1 Thermistor. A thermistor is a thermally sensitive resistor whose primary function is to exhibit a change in electrical resistance with a change in body temperature.

6.8.2 Standard reference temperature. The standard reference temperature is the thermistor body temperature at which nominal zero power resistance is specified (25°C).

6.8.3 Zero power resistance (R_T). The zero power resistance is the dc resistance value of a thermistor measured at a specified temperature with a power dissipation by the thermistor low enough that any further decrease in power will result in not more than 0.1 percent (or .100 inch (2.54 mm) of the specified measurement tolerance, whichever is smaller) change in zero power resistance.

6.8.4 Resistance ratio characteristic. The resistance ratio characteristic identifies the ratio of the zero power resistance of a thermistor measured at 25°C to that resistance measured at 125°C (see 4.8.3).

6.8.5 Zero power temperature coefficient of resistance (alpha a_T). The zero power temperature coefficient of resistance is the ratio at a specified temperature (T), of the rate of change of zero power resistance with temperature to the zero power resistance of the thermistor.

$$a_T = \frac{1}{R_T} \frac{(d^R T)}{(dT)}$$

6.8.5.1 Negative temperature coefficient (NTC). A NTC thermistor is one which the zero power resistance decreases with an increase in temperature.

6.8.5.2 Positive temperature coefficient (PTC). A PTC thermistor is one which the zero power resistance increases with an increase in temperature.

6.8.6 Maximum operating temperature. The maximum operating temperature is the maximum body temperature at which the thermistor will operate for an extended period of time with acceptable stability of its characteristics. This temperature is the result of the internal or external heating, or both, and should not exceed the maximum value specified (see 3.1).

6.8.7 Maximum power rating. The maximum power rating of a thermistor is the maximum power which a thermistor will dissipate for an extended period of time with acceptable stability of its characteristics (see 3.1).

6.8.8 Dissipation constant. The dissipation constant is the ratio, (in milliwatts per degree C) at a specified ambient temperature, of a change in power dissipation in a thermistor to the resultant body temperature change.

Downloaded from http://www.everyspec.com

6.8.9 Thermal time constant. The thermal time constant is the time required for a thermistor to change to 63.2 percent of the total difference between its initial and final body temperature when subjected to a step function change in temperature under zero power conditions.

6.8.10 Resistance temperature characteristic. The resistance temperature characteristics is the relationship between the zero power resistance of a thermistor and its body temperature (see 3.1).

6.8.11 Temperature wattage characteristic. The temperature wattage characteristic of a thermistor is the relationship at a specified ambient temperature between the thermistor temperature and the applied steady state wattage.

6.8.12 Current time characteristic. The current time characteristic is the relationship at a specified ambient temperature between the current through a thermistor and time, upon application or interruption of voltage to it.

6.8.13 Stability. The stability of a thermistor is the ability of a thermistor to retain specified characteristics after being to designated environment or electrical test conditions.

6.9 Tin whisker growth. The use of alloys with tin content greater than 97 percent, by mass, may exhibit tin whisker growth problems after manufacture. Tin whiskers may occur anytime from a day to years after manufacture and can develop under typical operating conditions, on products that use such materials. Conformal coatings applied over top of a whisker-prone surface will not prevent the formation of tin whiskers. Alloys of 3 percent lead, by mass, have shown to inhibit the growth of tin whiskers. For additional information on this matter, refer to ASTM-B545 (Standard Specification for Electrodeposited Coatings of Tin).

* 6.10 Environmentally preferable material. Environmentally preferable materials should be used to the maximum extent possible to meet the requirements of this specification. As of the dating of this document, the U.S. Environmental Protection Agency (EPA) is focusing efforts on reducing 31 priority chemicals. The list of chemicals and additional information is available on their website http://www.epa.gov/osw/hazard/wastemin/priority.htm. Use of these materials should be minimized or eliminated unless needed to meet the requirements specified herein (see Section 3).

6.11 Subject term (key word) listing.

Coefficient, negative temperature
Coefficient, positive temperature
Dissipation constant
Thermal time constant
Zero power resistance

6.12 Amendment notations. The margins of this specification are marked with asterisks to indicate modifications generated by this amendment. This was done as a convenience only and the Government assumes no liability whatsoever for any inaccuracies in these notations. Bidders and contractors are cautioned to evaluate the requirements of this document based on the entire content irrespective of the marginal notations.

Downloaded from http://www.everyspec.com

APPENDIX A

PROCEDURE FOR QUALIFICATION INSPECTION

A.1 SCOPE

A.1.1 Scope. This appendix details the procedure for submission of samples for qualification inspection of thermistors covered by this specification. The procedure for extending qualification of the required sample to other thermistors covered by this specification is also outlined herein. This is a mandatory part of the specification. The information contained herein is intended for compliance.

A.2 APPLICABLE DOCUMENTS

A.2.1 General. The documents listed in this section are specified in sections 3, 4, and 5 of this specification. This section does not include documents cited in other sections of this specification or recommended for additional information or as examples. While every effort has been made to ensure the completeness of this list, document user are cautioned that they meet all specified requirements documents cited in sections 3, 4, and 5 of this specification, whether or not they are listed.

A.2.2 Government.

A.2.2.1 Specifications, standards and handbooks. The following specifications, standards and handbooks form a part of this document to the extent specified herein. Unless otherwise specified, the issues of these documents are those cited in the solicitation or contract.

DEPARTMENT OF DEFENSE STANDARDS

MIL-STD-1276 - Leads for Electronic Component Parts.

* (Copies of these documents are available online at http://assist.daps.dla.mil/quicksearch/ or from the Standardization Document Order Desk, 700 Robbins Avenue, Building 4D, Philadelphia, PA 19111-5094.)

* A.2.3 Order of precedence. Unless otherwise noted herein or in the event of a conflict between the text of this document and the references cited herein (except for related specification sheets), the text of this document takes precedence. Nothing in this document, however, supersedes applicable laws and regulations unless a specific exemption has been obtained.

A.3 SUBMISSION

A.3.1 Sample. A sample consisting of 62 units, 31 of the lowest and highest resistance values in each resistance ratio characteristic, and 31 of the lowest (tightest) resistance tolerance in each style for which qualification is sought shall be submitted. (For the solderability test, if both leads are tested, use 74 sample units. However, if one lead is to be tested, use 86 sample units.) Units for solderability test can be of any resistance value.

Downloaded from http://www.everyspec.com

APPENDIX A

A.3.1.1 Additional sample for extension of terminal qualification. When terminal type "S" in a style is submitted in A.3.1, qualification for terminal "W" in that style and group may be granted with the added submission of 20 type "W" samples to group I, group III, and group V of table IV. When terminal type "W" is submitted, qualification for type "S" may be granted with the additional submission 30 samples of type "S" to group I, group II, group III, and group V of table IV.

A.4 EXTENT OF QUALIFICATION

A.4.1 Extent of qualification. The resistance range included in the qualification of any one thermistor style and characteristic shall be between the resistance values which pass the qualification inspection. Qualification of lower resistance tolerances shall qualify the higher resistance tolerances in accordance with table A-I. Qualification between terminal types shall be as described in A.3.1.

TABLE A-I. Extension of qualification.

Resistance tolerance	Will qualify resistance tolerance
F	G, J, K
G	J, K
J	K
K	

A.5 SOLDER DIP (RETINNING) LEADS

A.5.1 Solder dip (retinning) leads. The manufacturer may be solder dip/retin the leads of product supplied to this specification provided the solder dip process has been approved by the qualifying activity.

A.5.2 Qualifying activity approval. Approval of the solder dip process will be based on one of the following options:

a. When the original lead finish qualified was hot solder dip lead finish 52 of MIL-STD-1276. (Note: The 200 microinch maximum thickness is not applicable.) The manufacturer shall use the same solder dip for retinning as is used in the original manufacture of product.

b. When the lead originally qualified was not hot solder dip lead finish 52 of MIL-STD-1276 as prescribed in A.5.2a, approval for the solder dip shall be based on the following test procedure:

(1) Thirty samples of any resistance value for each style and lead finish are subjected to the manufacturer's solder dip process. Following the solder dip, the thermistors are subjected to the zero power resistance test and other group A electricals. No defects are allowed.

(2) Ten of the 30 samples are subjected to the solderability test. No defects are allowed.

(3) The remaining 20 samples are subjected to the resistance to solder heat test followed by the moisture resistance test. No defects are allowed.

Downloaded from http://www.everyspec.com

APPENDIX A

A.5.3 Solder dip/retin options. The manufacturer may solder dip/retin as follows:

a. After group A tests and following the solder dip/retinning: the electrical measurements required in group A, subgroup 1, tests shall be repeated on the lot. Group A, subgroup 1, lot rejection criteria shall be used. Following these tests, the manufacturer shall submit the lot to the group A solderability test as specified in 4.8.4.

b. As a corrective action if the lot fails the group A solderability test: the lot may be retinned no more than two times. The lot after retinning shall be 100 percent screened for group A electrical requirements (dc resistance) and parts failing (lot not exceeding PDA for group A, subgroup 1, see 4.6.2.1) these screens shall not be supplied to this specification, if electrical failures are detected after the second retinning operation exceeding 1 percent of the lot, the lot shall not be supplied to this specification.

c. After group A inspection has been completed: Following the solder dip/retinning process, the electrical measurements required in group A, subgroup 1 screening tests shall be repeated on 100 percent of the lot. The PDA for the electrical measurements shall be as for the subgroup 1 tests. Following these tests, the manufacturer shall submit the lot to the group A solderability test as specified in 4.8.4.

Custodians:
Army – CR
Navy – EC
Air Force – 85

Review activities:
Army – AR, AT, AV, CR4
Navy – AS, CG, MC, OS
Air Force – 19, 99

Civil agencies:
NASA – NA

Preparing activity:
DLA – CC

(Project 5905-2008-075)

NOTE: The activities listed above were interested in this document as of the date of this document. Since organizations and responsibilities can change, you should verify the currency of the information above using the ASSIST Online database at http://assist.daps.dla.mil