Downloaded from http://www.everyspec.com

INCH-POUND
MIL-PRF-22885J
29 February 2016
SUPERSEDING
MIL-PRF-22885H
w/Amendment 1
24 September 2014

PERFORMANCE SPECIFICATION

SWITCHES, PUSH BUTTON, ILLUMINATED, GENERAL SPECIFICATION FOR

This specification is approved for use by all Departments and Agencies of the Department of Defense.

1. SCOPE

1.1 Scope. This specification covers the general requirements for manually operated illuminated push button switches, switch assemblies (see 6.4.1), and associated modular subassemblies. As used in this specification, the term "switches" should include the associated modular subassemblies, including switches, indicator lights, actuators, lenses, color filters, panel seals, barriers, and so forth.

1.2 Classification.

1.2.1 Enclosure requirement. The enclosure requirement is identified by a single digit in accordance with table I.

TABLE I. Enclosure requirement.

Symbol	Seal
1	Unsealed
2	Drip proof 1/
3	Watertight 1/
4	Splash proof 1/

1/ In accordance with MIL-STD-108.

1.2.2 Temperature characteristic. The temperature characteristic is identified by a single digit, indicating the temperature range of the switch in accordance with table II.

TABLE II. Temperature characteristic.

Symbol	Operating temperature range	
	Minimum	Maximum
1	-55°C	+71°C with lamps energized +85°C with lamps unenergized

Comments, suggestions or questions on this document should be addressed to Defense Supply Center Columbus, ATTN: VAT, Post Office Box 3990, Columbus, OH 43218-3990, or emailed to switch@dla.mil. Since contact information can change, you may want to verify the currency of this address information using the ASSIST Online database at https://assist.dla.mil/.

AMSC N/A FSC 59GP

Downloaded from http://www.everyspec.com

1.2.3 Vibration grade. The vibration grade is identified by a single digit in accordance with table III.

TABLE III. Vibration grade.

Symbol	Frequency range	Acceleration level
1	10 Hz- 55 Hz	0.06 inch total excursion, MIL-STD-202-201
2	10 Hz- 500 Hz	10 g peak, test condition A, MIL-STD-202-204
3	10 Hz-2,000 Hz	15 g peak, test condition B, MIL-STD-202-204

1.2.4 Operation. The operation of the switch is identified by a single letter in accordance with table IV.

TABLE IV. Operation.

Operation	Symbol
Momentary action	A
Alternate action	B
Push pull	C
Magnetically held	D
Position indicating, alternate action	E
Position indicating, magnetically held	F
Sequence action	G
Indicator light only	H

1.2.5 Color. The color of the lens will be identified by a single letter in accordance with table V.

TABLE V. Color.

Symbol	Illuminated color
R	Red
G	Green
Y	Yellow
B 1/	Blue
W	White
V	Violet
O	Opaque
H	NVIS Green A
J	NVIS Green B
K	NVIS Yellow
L	NVIS Red

1/ Blue is not recommended and should be used only when absolutely necessary.

Downloaded from http://www.everyspec.com

1.2.6 Display type. The lens display is designated by a single letter in accordance with table VI.

TABLE VI. Display type.

Symbol	Display
C	Colored background (shows color both when nonilluminated and illuminated).
W	White background (white until illuminated, then background appears in color).
S	Sunlight readable (legend not visible until illuminated, then legend appears in color. Background is black).
N	Opaque background (visible legend with illuminating characters).
H	Hidden legend (same as display type S except contrast requirements do not apply).
B	Hidden legend (black legend on an obscure background) when unlighted. When illuminated, legend is black and the background appears in color. The display should not appear energized in the unlighted condition.

1.3 Part or Identifying Number (PIN). The PIN (when applicable) will consist of the letter "M", the basic number of the specification sheet, and an assigned dash number (see 3.1), as shown in the following example:

M	22885/XX	-XXXX
Designator	Specification sheet number	Dash number (see specification sheet for formulation)

2. APPLICABLE DOCUMENTS

2.1 General. The documents listed in this section are specified in sections 3 and 4 of this specification. This section does not include documents cited in other sections of this specification or recommended for additional information or as examples. While every effort has been made to ensure the completeness of this list, document users are cautioned that they must meet all specified requirements documents cited in sections 3 and 4 of this specification, whether or not they are listed.

2.2 Government documents.

2.2.1 Specifications, standards, and handbooks. The following specifications, standards, and handbooks form a part of this document to the extent specified herein. Unless otherwise specified, the issues of these documents are those cited in the solicitation or contract.

Downloaded from http://www.everyspec.com

FEDERAL

STANDARDS

FED-STD-H28 - Screw Thread Standards for Federal Services

DEPARTMENT OF DEFENSE

SPECIFICATIONS

MIL-R-5757/10 - Relays, Electromagnetic, Hermetically Sealed, DPDT, Low Level and 2 Amperes.

MIL-DTL-6363/8 - Lamps, Incandescent, Aircraft Service, Single Contact Midget Flanged Base, T-1-3/4 Bulb.
MIL-PRF-15160 - Fuses, Instrument, Power, and Telephone, General Specification for.
MIL-PRF-15160/2 - Fuses, Instrument, Power, and Telephone, (Nonindicating), Style F02.
MIL-L-85762 - Lighting, Aircraft, Interior, Night Vision Imaging System (NVIS) Compatible.
MS3338 - Lamp Incandescent, T-1 Bulb, Based, 28 Volt, Integral Lighting.

STANDARDS

MIL-STD-108 - Definitions of and Basic Requirements for Enclosures for Electric and Electronic Equipment.
MIL-STD-202 - Test Methods for Electronic and Electrical Component Parts.
MIL-STD-202-105 - Barometric Pressure (reduced)
MIL-STD-202-106 - Moisture Resistance
MIL-STD-202-107 - Thermal Shock
MIL-STD-202-109 - Explosion
MIL-STD-202-110 - Sand and Dust
MIL-STD-202-201 - Vibration
MIL-STD-202-204 - Vibration High Frequency
MIL-STD-202-208 - Solderability
MIL-STD-202-210 - Resistance to Soldering Heat
MIL-STD-202-211 - Terminal Strength
MIL-STD-202-212 - Acceleration
MIL-STD-202-213 - Shock (specified pulse)
MIL-STD-202-301 - Dielectric Withstanding Voltage
MIL-STD-202-302 - Insulation Resistance
MIL-STD-202-307 - Contact Resistance
MIL-STD-202-310 - Contact-chatter Monitoring
MIL-STD-202-311 - Life, Low Level Switching
MIL-STD-1285 - Marking of Electrical and Electronic Parts.

(Copies of these documents are available online at https://assist.dla.mil/)

2.3 Non-Government publications. The following documents form a part of this document to the extent specified herein. Unless otherwise specified, the issues of these documents are those cited in the solicitation or contract.

AMERICAN SOCIETY OF MECHANICAL ENGINEERS (ASME)

ASME-Y14.38 - Abbreviations and Acronyms

(Copies of these documents are available online at http://www.asme.org/)

ELECTRONIC COMPONENTS INDUSTRIES ASSOCIATION (ECIA)

ECIA-448-1 - Standard Test Method for Electromechanical Switches (Test for Contact Bounce).

(Copies of these documents are available online at http://www.ecianow.org.)

Downloaded from http://www.everyspec.com

INTERNATIONAL ORGINZATIONS FOR STANDARDS (ISO)

ISO 10012 - Measurement management systems Requirements for measurement processes and measuring equipment

(Copies of these documents are available online at http://www.iso.org.)

NATIONAL CONFERENCE of STANDARDS LABORTORIES (NCSL)

NCSL Z540.3 - Calibration of Measuring and Test Equipment, Requirements for.

(Copies of these documents are available online at http://www.ncsli.org/.)

SAE INTERNATIONAL

SAE- AS7928 - Terminals, Lug, Splices, Conductor, Crimp Style, Copper, General Specification For
SAE-AS18012 - Markings For Aircrew Station Displays Design and Configuration of
SAE-AS25244 - Circuit Breaker, Trip-Free, Push-Pull, 5 Thru 35 Ampere, Type I.
SAE-AS58091 - Circuit Breakers, Trip-Free, Aircraft, General Specification for.

(Copies of these documents are available online at http://www.sae.org)

UNDERWRITERS LABORATORIES, INC. (UL)

UL94 - Tests for Flammability of Plastic Materials for Parts in Devices and Appliances.

(Copies of these documents are available online at http://www.ul.com.)

(Non-Government standards and other publications are normally available from the organizations that prepare or distribute the documents. These documents also may be available in or through libraries or other informational services.)

2.4 Order of precedence. In the event of a conflict between the text of this document and the references cited herein (except for related associated specifications sheets), the text of this document takes precedence. Nothing in this document, however, supersedes applicable laws and regulations unless a specific exemption has been obtained.

3. REQUIREMENTS

3.1 Specification sheets. The individual item requirements shall be as specified herein and in accordance with the applicable specification sheets. In the event of any conflict between the requirements of this specification and the specification sheet, the latter shall govern.

3.2 Switch categories. Switches furnished under this specification shall be category I or category II as defined in 3.2.1 and 3.2.2 respectively.

3.2.1 Category I switches. Switches shall be completely defined by a specification sheet (see 3.1). Category I switches shall be ordered in accordance with 6.2.1.

3.2.2 Category II switches. Switches, the same as qualified category I switches, except for minor differences which do not change the basic materials, interface and dimensions of the qualified switch and which do not effect performance. Unless otherwise specified (see 3.1), these variations are limited to the addition of legends, variation in size, shape, or dimensions of terminations; selected switches with tighter tolerances on illuminated color, luminance or operating characteristics; and variations in illuminated color, display type, or color of bezels, mounting flanges, barriers, and mounting bushings. Category II switches shall be acquired from a source listed on the applicable Qualified Products List (QPL) for the particular similar product in category I. Category II switches shall be ordered in accordance with 6.2.2.

Downloaded from http://www.everyspec.com

3.3 Classification of requirements. The requirements for the switches are classified in accordance with table VII.

TABLE VII. Classification of requirements.

Requirement	Paragraph
Qualification	3.4
Material	3.5
Interface and dimensions	3.6
Performance	3.7 through 3.44
Marking	3.45
Workmanship	3.47

3.4 Qualification. Category I switches furnished under this specification shall be products that are manufactured by a manufacturer authorized by the qualifying activity for listing on the applicable QPL before contract award (see 4.4 and 6.3).

3.5 Material. Material shall be as specified herein. However, when a definite material is not specified, a material shall be used which will enable the switches to meet the performance requirements of this specification. Acceptance or approval of any constituent material shall not be construed as a guaranty of the acceptance of the finished product.

3.5.1 Metals. All metal parts, other than current-carrying parts, shall be of corrosion-resistant material or shall be suitably protected to resist corrosion.

3.5.1.1 Ferrous material. Ferrous material shall not be used for current-carrying parts except for feed-through terminals in headers.

3.5.1.2 Dissimilar metals and compatible couples. When dissimilar metals are used in intimate contact with each other, protection against electrolysis and corrosion shall be provided. The use of dissimilar metals in contact, which tend toward active electrolytic corrosion (particularly brass, copper, or steel used in contact with aluminum or aluminum alloy) is not acceptable. However, metal plating or metal spraying of dissimilar base metals to provide similar or suitable abutting surfaces is permitted. The use of dissimilar metals separated by a suitable insulating material is also permitted. For additional information and guidance on dissimilar metals see 6.8.

3.5.2 Insulation. Materials for insulation shall be used which will enable the switch to meet the performance requirements of this specification. Plastic materials shall be fungus inert and shall meet flammability requirements of 94V-0 in accordance with UL94. Additional information and guidance on ceramic and thermoplastic material is provided in 6.9.

3.5.3 Silicone rubber. Silicone rubber parts, when used, shall be selected to enable the switch to meet performance requirements of this specification. Additional information and guidance on rubber material is provided in 6.10.

3.5.4 Potting compounds. Potting compounds, when used, shall be selected to enable the switch to meet performance requirements of this specification. Additional information and guidance on potting compounds is provided in 6.11.

3.5.5 Finish. Aluminum parts, when used, shall be anodized or chemically treated to enable the switch to meet the performance requirements of this specification. Bezels, mounting flanges, barriers, mounting bushings and associated mounting hardware that are designed to be exposed at the front of the panel after assembly shall have a black lusterless finish. Additional information and guidance on finish is provided in 6.12.

3.5.6 Pure tin. The use of pure tin, as an underplate or final finish, is prohibited both internally and externally. Tin content of switch components and solder shall not exceed 97 percent, by mass. Tin shall be alloyed with a minimum of 3 percent lead, by mass (see 6.16)

3.6 Interface and dimensions. Switches shall be so constructed as to insure proper operation when mounted in any position. The switches shall meet the interface and dimensions specified (see 3.1).

3.6.1 Mounting hardware. Each switch shall be provided with mounting hardware as specified (see 3.1 and 6.2). Switches which are mounted by means of a threaded bushing shall include a non-turn device.

Downloaded from http://www.everyspec.com

3.6.2 Termination. Termination shall be as specified (see 3.1 and 6.2).

3.6.2.1 Solder terminals. Solder terminals shall be treated to facilitate soldering. Coatings such as hot solder dip are acceptable. Silver plating shall not be used as the external coating. Gold plating, .00003 inch minimum (0.00076 mm minimum), may be used and shall be over a diffusion barrier such as nickel or palladium. For additional information and guidance on plating see 6.13.

3.6.2.2 Screw terminals. Screw terminals shall be provided with hardware as specified (see 3.1 and 6.2). Lock washers shall be captive to the screw.

3.6.2.3 Plug-in terminations (not applicable to printed circuit boards). Plug-in terminations shall be treated to facilitate contact. Gold plating, .00003 inch minimum (0.00076 mm minimum) may be used and shall be over a diffusion barrier. For additional information and guidance on plating see 6.13.

3.6.2.4 Common termination system. Switches with common termination system, when used, shall meet performance requirements of this specification.

3.6.3 Screw threads. Screw threads on removable threaded parts shall be in accordance with Unified Thread Series of FED-STD-H28 or equivalent industry standard. All threaded parts shall engage by at least two full turns. Threading of nonmetallic parts shall not be permitted.

3.6.4 Weight. The weight shall be as specified (see 3.1 and 6.2).

3.6.5 Actuating mechanism. Unless otherwise specified, the external actuator shall be insulated from all current carrying parts.

3.6.6 Lamps. Unless otherwise specified (see 3.1), the lamps shall be flange base T-1, or T-1-3/4 or equivalent. Lamp failure shall not constitute a test failure unless the lamp is non-replaceable.

3.6.6.1 Lamp circuitry. The lamp circuits shall be insulated from the switching circuits and from the assembly case and its mounting means.

3.6.6.2 Lamp replacement. The lamps shall be replaceable from the front of the panel. No tools of any type shall be required to replace the lamp.

3.6.6.3 Lamp contacts. Lamp contacts shall be of the multiple contact area design to provide for more than one bearing on the mating tip of the applicable lamp when installed. The lamp contacts shall be of suitable material or plated to resist electrolytic corrosion of the contact or the lamp base.

3.6.7 Lens. The lens design shall permit the application of legends and shall permit positioning of the legends in specific relationship to the non-turn device. When specified (see 3.1 and 6.2), lens markings shall conform to the requirements of SAE-AS18012. (When abbreviations are necessary use ASME-Y14.38, as applicable.) Snap-on type lens shall not be used for push-pull operative switches. The lens shall be free from defects which will prevent it from meeting luminous distribution and color requirements. Unless otherwise specified, there shall be no high light reflective surfaces on the displays.

3.6.8 Cap color filters. Material for lamp bulb filters in contact with lamps (used to convert clear incandescent lamps to colored lighting) shall be silicone rubber, glass, or other appropriate electrically nonconductive material.

3.6.9 Barriers. Mounting and spacing barriers shall be as specified (see 3.1 and 6.2).

3.6.10 Panel seals. Panel seals shall be selected to enable the switch to meet performance requirements of this specification. Additional information and guidance on rubber material is provided in 6.14.

3.7 Solderability (applicable to solderable terminals). When switches are tested as specified in 4.7.2, the criteria for acceptable solderability shall be in accordance with MIL-STD-202-208.

3.8 Resistance to soldering heat (applicable to switches with solderable terminals). When switches are tested as specified in 4.7.3, there shall be no deformation or other damage at the conclusion of the test sequence.

Downloaded from http://www.everyspec.com

3.9 Contact resistance (unless otherwise specified, see 3.1). When measured as specified in 4.7.4.1, the contact resistance shall not exceed 25 milliohms. When measured as specified in 4.7.4.2, the lamp contact resistance shall not exceed 1.0 ohm. After electrical endurance, the contact resistance shall not exceed 1 percent of the load impedance using the electrical parameters of the electrical endurance test load. Lamp contact resistance is not applicable after electrical endurance.

3.10 Contact bounce (when specified). When switches are tested as specified in 4.7.5, the contact bounce shall be as specified (see 3.1 and 6.2).

3.11 Operating characteristics. When switches are tested as specified in 4.7.6, the operating characteristics shall be as specified (see 3.1 and 6.2). Unless otherwise specified, switch action will be break before make (see 3.1 and 6.2).

3.12 Coincidence of operating and releasing points (when specified) (applicable to multipole switches). When switches are tested as specified in 4.7.7, all poles shall have actuated (transfer of contacts) within the limits specified (see 3.1 and 6.2).

3.13 Permanency of marking (when specified). Following the test specified in 4.7.8, all required markings shall be legible (see 3.45).

3.14 Terminal strength. When switches are tested as specified in 4.7.9, there shall be no short circuiting, breakage, loosening, rotation of terminals, or damage which will interfere with the electrical or mechanical performance of the switch.

3.15 Strength of actuating means. When switches are tested as specified in 4.7.10, there shall be no damage which will interfere with the electrical or mechanical performance of the switch. The operating characteristics shall be as specified (see 3.1 and 6.2).

3.16 Strength of actuator (bushing mounted switches). Actuators on bushing mounted switches, which receive either snap-in or screw-in pushbuttons, shall exhibit no electrical discontinuity or mechanical loosening of the actuator when tested as specified in 4.7.11. The operating characteristics shall be as specified (see 3.1 and 6.2).

3.17 Strength of mounting bushing (applicable to threaded mounting bushings)(see 3.1 and 6.2). When switches are tested as specified in 4.7.12, there shall be no damage to the switch or loosening or twisting of the bushing relative to the switch. The operating characteristics shall be as specified (see 3.1 and 6.2).

3.18 Lens orientation. When screw-in orientable type lenses are specified (see 3.1 and 6.2), the lens shall be capable of rotating a minimum of 350°, after installation, when subjected to the tests specified in 4.7.13. When snap-in pushbuttons are specified (see 3.1 and 6.2), the lens shall not rotate more than 10 degrees between stops, after installation, when subjected to the tests specified in 4.7.13. There shall be no damage to the lens indexing mechanism.

3.19 Thermal shock. When switches are tested as specified in 4.7.14, there shall be no mechanical or electrical damage, or loosening of fastening devices. There shall be no discoloration or deformation of the lens.

3.20 Vibration. When switches are tested as specified in 4.7.15, there shall be no opening of closed contacts or closing of open contacts in excess of 10 microseconds (µs). During the test, the lamp circuit shall have no electrical discontinuity in excess of 10 milliseconds (ms). At the conclusion of the test, there shall be no broken, loose, deformed, or displaced parts.

3.21 Shock (see 4.7.16).

3.21.1 Method I. When switches are tested as specified in 4.7.16.1, there shall be no opening of closed contacts or closing of open contacts in excess of 10 µs. At the conclusion of the test, there shall be no broken, loose, deformed, or displaced parts. No part of the switch shall become displaced from its normal (ready to operate) position during shock testing.

3.21.2 Method II (when specified) (see 3.1 and 6.2). When switches are tested as specified in 4.7.16.2, there shall be no opening of closed contacts or closing of open contacts in excess of 20 ms and the switch shall be retained in the panel by its mounting means. No part of the switch shall become displaced from its normal (ready to operate) position during shock testing. At the conclusion of test, the switch shall be electrically and mechanically operable.

Downloaded from http://www.everyspec.com

3.22 Acceleration (when specified) (see 3.1 and 6.2). When switches are tested as specified in 4.7.17, there shall be no opening of closed contacts or closing of open contacts, and there shall be no mechanical or electrical damage (see 3.1 and 6.2).

3.23 Moisture resistance. When switches are tested in the wet condition as specified in 4.7.18, the insulation resistance shall be not less than 10 megohms. At the end of the drying period, the insulation resistance shall not be less than 1,000 megohms. At the conclusion of the test, there shall be no excessive corrosion, breaking, cracking, spalling, or loosening of terminals, and mounting hardware shall be readily removable. Excessive corrosion is defined as that which interferes with the electrical or mechanical performance and has penetrated the plating and has attacked the base material.

3.24 Dielectric withstanding voltage. When switches are tested as specified in 4.7.19, there shall be no flashover, arcing, breakdown, or current flow in excess of 500 microamperes.

3.25 Seal (applicable to enclosure requirements 2, 3 and 4) (see 3.1 and 6.2). When switches are tested as specified in 4.7.20, there shall be no leakage of water through the panel seal into the lamp module or into the switch, as determined by visual examination and the dielectric test of 4.7.19.1. Under group A visual inspection, there shall be no pinholes or other surface defects.

3.26 Marking visibility. When switches are examined as specified in 4.7.21, all required markings shall be legible (see 3.45).

3.27 Salt spray (corrosion). When switches are tested as specified in 4.7.22, there shall be no evidence of excessive corrosion. Excessive corrosion is defined as that which interferes with the electrical or mechanical performance and has penetrated the plating and has attacked the base material.

3.28 Insulation resistance. When switches are tested as specified in 4.7.23, the insulation resistance shall be not less than 1,000 megohms.

3.29 Short circuit. When switches are tested as specified in 4.7.24, there shall be no welding or sticking of contacts, or damage. Switches shall be mechanically and electrically operative at the end of the test.

3.30 Explosion. When switches are tested as specified in 4.7.25, the explosive mixture in the test chamber surrounding and external to the switch shall not explode, whether or not explosion occurs within the switch. The switch shall be electrically and mechanically operable at the conclusion of the test.

3.31 Sand and dust. When specified (see 3.1), switches shall be tested as specified in 4.7.26. There shall be no operating characteristics degradation and the switches shall be mechanically and electrically operative at the conclusion of the tests.

3.32 Overload cycling. When switches are tested as specified in 4.7.27, there shall be no mechanical or electrical failure.

3.33 Electrical endurance. When switches are tested as specified in 4.7.28, no contact shall fail to open or close its individual circuit in proper sequence. The temperature rise shall not exceed 50°C when measured as specified in 4.7.28.3. The contact resistance, unless otherwise specified, shall not exceed 1 percent of the load resistance using the electrical parameters of the electrical endurance test load. After the test, switches shall be electrically and mechanically operative; there shall be no deformation, melting, delamination, or blistering of the pushbutton/lens assembly and the legend shall be legible.

3.34 Mechanical endurance. When switches are tested as specified in 4.7.29, the switches shall be electrically and mechanically operative. No contact shall fail to open or close its individual circuit in proper sequence. The lamp retention test plug shall remain captive to the lampholder following the test specified in 4.7.29b.

3.35 Intermediate current (when specified) (see 3.1 and 6.2). When switches are tested as specified in 4.7.30, no contact shall fail to close or open its individual circuit in proper sequence as detected by the relay and monitoring device. Switch contact resistance shall not exceed 1 percent of load resistance following electrical life at rated load.

3.36 Low level circuit (when specified) (see 3.1). When switches are tested as specified in 4.7.31, the contact resistance of any individual switch circuit shall be less than 3.0 ohms during each contact closure. No contact shall fail to open or close its individual circuit in proper sequence.

Downloaded from http://www.everyspec.com

3.37 Logic level circuit (when specified, see 3.1). When switches are tested as specified in 4.7.32, there shall be no contact sticks or misses detected by the monitoring device. A voltage of 2.1 volts or greater across the switch terminal shall constitute a contact miss (failure to properly close the circuit). A voltage drop of less than 90 percent of the open-circuit voltage shall constitute a contact stick (failure to properly open the circuit).

3.38 EMI/RFI shielding (when applicable) (see 3.1 and 6.2). When switches are tested as specified in 4.7.33.1, screen to mounting surface resistance shall not exceed 1 ohm. When switches are tested as specified in 4.7.33.2, the shielding attenuation shall be not less than 60 dB over the frequency range from 100 MHz to 1,000 MHz, unless otherwise specified (see 3.1 and 6.2).

3.39 Illuminated colors. When switches are tested as specified in 4.7.34, the illuminated colors of the lens shall be in accordance with table VIII and figure 1.

3.40 Luminance. When switches are tested as specified in 4.7.35, the measured photometric brightness in foot lamberts shall be as specified (see 3.1 and 6.2).

TABLE VIII. Illuminated chromaticity limits. 1/

Color	x	y
Red	.695	.285
	.703	SL 2/
	.655	.325
	.660	SL 2/
Green	.260	.570
	.300	.630
	.160	.660
	.200	.720
Yellow	.562	.415
	.570	SL 2/
	.596	.382
	.605	SL 2/
Blue	.150	.260
	.220	.260
	.220	.320
	.150	.320
White	.400	.420
	.460	.420
	.400	.380
	.460	.380
Violet	.480	.280
	.480	.320
	.530	.280
	.530	.320

1/ The chromaticities of the color lenses expressed as "x" and "y" coordinates on the CIE chromaticity diagram shall be within areas bounded by the coordinates listed for each color.
2/ SL - Spectrum locus (where intersected by other coordinate pair).

3.41 Sunlight readability (when specified) (see 3.1 and 6.2). When switches are tested as specified in 4.7.36, the average contrast ratio of each lighted legend character to the background shall be 0.6 minimum unless otherwise specified (see 3.1); and the average contrast ratio of each unlighted legend character to the background shall have an absolute value less than or equal to 0.1, unless otherwise specified (see 3.1 and 6.2).

Downloaded from http://www.everyspec.com

3.42 Night vision imaging system (NVIS) compatibility (when specified, see 3.1 and 6.2). When switches are tested as specified in 4.7.37, the chromaticity, luminance, and spectral radiance output of the illuminated display shall be NVIS compatible as specified in MIL-L-85762: NVIS green A and NVIS green B colors shall meet all class A and class B equipment requirements for illuminated controls. NVIS yellow color shall meet all class A and class B equipment requirements for caution signals. NVIS red color shall meet all class B equipment requirements for warning signals.

3.43 Stray lights (when specified) (see 3.1). The display lighting system shall be so housed as to minimize stray light and to shield all lamp filaments from direct view. When switches are tested as specified in 4.7.38, the stray light emitted shall not exceed 0.20 foot lamberts in any direction.

3.44 Field of view. When switches are tested as specified in 4.7.39, the visibility of any signal, legend, symbology or alpha-numerics shall not be restricted by the periphery of the enclosure for the display.

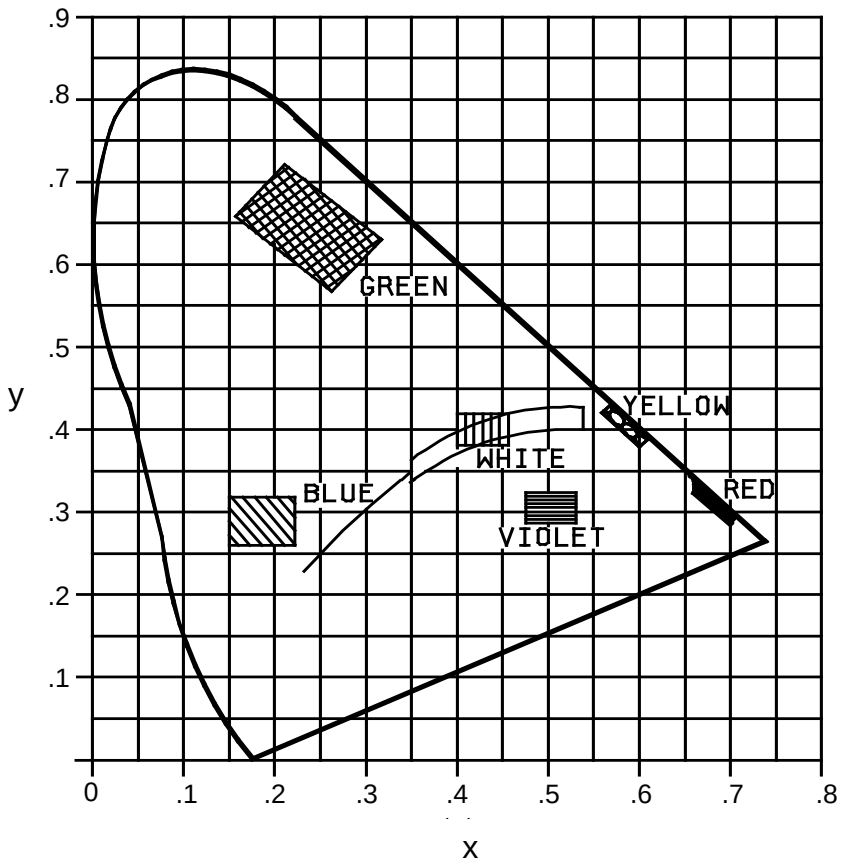

FIGURE 1. Commission Internationale de l'Eclairage (C.I.E.) chromaticity diagram class B.

Downloaded from http://www.everyspec.com

3.45 Marking.

3.45.1 Identification of product. Switches shall be marked in accordance with MIL-STD-1285 as follows:

a. PIN (category I only).

b. Manufacturer's part number (category II).

c. Manufacturer's name or trade mark.

d. Source code (if space is available).

e. Date code.

f. Terminal identification (see 3.1).

g. NVIS type and class as specified in MIL-L-85762 (when applicable).

3.45.2 Terminal identification. Terminals shall be marked to indicate the contact arrangement of the switch. When specified, terminal markings shall be augmented by a circuit schematic (see 3.1 and 6.2). There shall be no over-marking of the terminal identification.

3.46 Recycled, recovered, environmentally preferable, or biobased materials. Recycled, recovered, environmentally preferable, or biobased materials should be used to the maximum extent possible, provided that the material meets or exceeds the operational and maintenance requirements, and promotes economically advantageous life cycle costs.

3.47 Workmanship. Switches shall be processed in such a manner as to be uniform in quality and shall be free from cracked or displaced parts, sharp edges, burrs, and other defects which will affect life, serviceability, or appearance.

4. VERIFICATION

4.1 Classification of inspections. The inspections specified herein are classified as follows:

a. Qualification inspection (see 4.4).

b. Inspection requirements for category II switches (see 4.5).

c. Conformance inspection (see 4.6).

4.2 Test equipment and inspection facilities. Test and measuring equipment and inspection facilities of sufficient accuracy, quality, and quantity to permit performance of the required inspection shall be established and maintained by the contractor. The establishment and maintenance of a calibration system to control the accuracy of the measuring and test equipment shall be in accordance with NCSL Z540.3, ISO 10012 or approved equivalent.

4.3 Inspection conditions. Unless otherwise specified herein, all inspections shall be performed in accordance with the test conditions specified in the general requirements of MIL-STD-202.

4.4 Qualification inspection. Qualification inspection shall be performed at a laboratory acceptable to the Government (see 6.3) on sample units produced with equipment and procedures normally used in production.

4.4.1 Sample size. The number of switches to be subjected to qualification inspection shall be as specified in table XI.

4.4.2 Inspection routine. Sample units of switches shall be subjected to the qualification inspection specified in table IX, in the order shown. All sample units shall be subjected to the inspection of group I. The sample units shall then be divided as specified in table IX and subjected to the inspection for their particular group. All applicants for qualification approval under this specification shall demonstrate that each of their items conforms to all the requirements specified in the applicable documents (see 3.1), singularly and in combination with all other previously qualified items, regardless of manufacturer.

Downloaded from http://www.everyspec.com

4.4.3 Failures. One or more failures shall be cause for refusal to grant qualification approval. Lamp failure shall not be considered a unit failure; when the lamp failure is noted, immediately a new lamp is installed and the lamp functions test shall then be continued, as required. A lamp or LED failure for a nonreplaceable item shall be considered a unit failure (see 3.1).

4.4.4 Extent of qualification.

4.4.4.1 Single submission. Qualification shall be restricted to the type submitted.

4.4.4.2 Group submission. The extent of qualification shall be in accordance with the applicable specification sheet.

4.4.5 Verification of qualification. Every 12 months, the manufacturer shall provide verification of qualification to the qualifying activity. Continuation is based on meeting the following requirements:

a. Design of switch has not been modified (every 12 months).

b. Verification of group A lot acceptance (every 12 months) (see 4.6.2).

c. Periodic group B inspection (every 36 months) (see 4.6.3).

4.5 Inspection requirements for category II switches (see 3.2.2). Inspection requirements for category II switches shall be performed by the contractor after award of contract, and prior to production. Additional tests to verify suitability of the variations from the category I switches shall be performed as specified (see 6.2.2).

4.6 Conformance inspection. Conformance inspection of product for delivery shall consist of group A inspection.

4.6.1 Inspection lot. An inspection lot shall consist of all category I and category II switches of the same specification sheet, of the same enclosure requirement, temperature characteristic, vibration grade, shock type, and interface and dimensions, produced under essentially the same conditions, and offered for inspection at one time. Similar switches conforming to these requirements but having different circuitry may be combined to form a lot.

4.6.2 Group A inspection. Group A inspection shall consist of the inspections specified in table X. The inspections may be performed in any order, except dielectric withstanding voltage shall be performed after seal testing when seal is tested in accordance with 4.7.20.1, 4.7.20.2 or 4.7.20.3.

4.6.2.1 Sampling plan. Statistical sampling shall be in accordance with table X and table XI. A randomly selected group(s) of samples are required for subgroup 1, subgroup 2, and subgroup 3. For acceptance there shall be zero occurrences of defects.

4.6.2.1.1 Subgroup 1. A sample of parts shall be randomly selected in accordance with table XI, minor defect sampling plan.

4.6.2.1.2 Subgroup 2. A sample of parts shall be randomly selected in accordance with table XI, major defect sampling plan.

4.6.2.1.3 Subgroup 3 (contact bounce) (when applicable, see 3.1). Two samples shall be selected randomly from each inspection lot.

4.6.2.1.4 Subgroup 4 (NVIS compatibility) (when applicable, see 3.1). The lot shall be 100 percent inspected to the subgroup 4 NVIS compatibility test.

4.6.2.2 Rejected lots. If an inspection lot is rejected, the lot shall be 100 percent inspected for the defects noted. The contractor may correct the defects or remove the defective units from the lot. The lot shall then be sampled again in accordance with table XI. For acceptance, there shall be zero occurrences of defects. If there are one or more defects in this second sample for the same characteristic that caused the original lot rejection, the lot is rejected. Such lots shall be separate from new lots and shall be clearly identified as reinspected lots.

Downloaded from http://www.everyspec.com

4.6.3 Periodic inspection. Periodic inspection shall consist of group B. Except where the results of these inspections show noncompliance with the applicable requirements (see 4.6.3.1.4), delivery of products which have passed group A shall not be delayed pending the results of these periodic inspections.

4.6.3.1 Group B inspection. Group B inspection shall consist of the inspections specified in table XII, in the order shown. When a manufacturer has similar products qualified under different specification sheets, the qualifying activity may authorize group B tests which do not require redundant testing on the similar features of these products. Group B inspection shall be performed on sample units selected from inspection lots which have passed group A inspection. A manufacturer's normal quality control tests, production tests, environment tests, and so forth may be used to fulfill all or part of group B inspections; however, all of group B inspections shall be completed as specified in table XII.

4.6.3.1.1 Sampling plan. Group B inspections shall be completed in accordance with table XII within 36 months after the date of notification of qualification and within each subsequent 36-month period. The sample units shall be selected either from stock or a current production lot unless the Government considers it more practical to select a sample from current production. Switches selected from stock shall have been produced after the date of notification of qualification or subsequent to the date code of the previous group B inspection sample units. Group B inspection shall be performed on sample units produced using the same manufacturing facilities and processes as units normally offered for acquisition. When there has been no production of a particular type of switch for 36 months or more, sample units shall be selected from the next production lot presented for acceptance and for each subsequent 36-month period. When the specification sheet covers more than one part number, the PIN(s) subjected to group B inspection shall be the same PIN(s) specified for qualification; however, the group B inspection sample unit(s) need not be submitted to inspections not specified for qualification.

4.6.3.1.2 Failures. If one or more sample units fail to pass group B inspection, the sample shall be considered to have failed. Lamp failure shall not be considered a unit failure. When the lamp failure is noted, immediately a new lamp is installed and the lamp functions, test shall then be continued, as required. A lamp or LED failure for nonreplaceable item however (see 3.1), shall be considered a unit failure.

4.6.3.1.3 Disposition of sample units. Sample units which have been subjected to group B inspection shall not be delivered on the contract or order but shall be kept on hand until the next inspection period for submittal to the qualifying activity if so requested.

4.6.3.1.4 Noncompliance. If a sample fails to pass group B inspection, the contractor shall notify the qualifying activity and the cognizant inspection activity of such failure and take corrective action on the materials or processes, or both, as warranted, and on all units of product which can be corrected and which were manufactured under essentially the same conditions, with essentially the same materials, processes, and so forth, and which are considered subject to the same failure. Acceptance of the product shall be discontinued until corrective action, acceptable to the Government, has been taken. After the corrective action has been taken, group B inspection shall be repeated on additional sample units (complete inspection, or the inspection which the original sample failed, at the option of the Government.) Group A inspection may be reinstituted; however, final acceptance shall be withheld until the group B reinspection has shown that the corrective action was successful. In the event of failure after reinspection, information concerning the failure and the corrective action taken shall be furnished to the contracting officer and the qualifying activity.

4.7 Methods of inspection.

4.7.1 Visual and mechanical inspection. Switches and associated modular sub-assemblies shall be examined to verify that the materials, physical dimensions, marking, and workmanship are in accordance with the applicable requirements (see 3.1, 3.5, 3.6, 3.45 and 3.47).

4.7.1.1 Switching characteristic. The switching operation shall be examined by use of suitable test circuits for compliance with the applicable requirements (see 3.1 and 6.2).

4.7.1.2 Lamp circuit. The lamp circuit shall be examined for continuity and operation for compliance with the requirements as specified (see 3.1 and 6.2).

Downloaded from http://www.everyspec.com

4.7.2 Solderability (applicable to solderable terminals, see 3.7). Switches shall be tested in accordance with MIL-STD-202-208. The soldering iron method may be used. The following details and exceptions shall apply:

a. Number of terminals to be tested: A minimum of two switch and two lamp terminals shall be tested. When lamp terminals are located only on recessed planes and cannot be readily dipped, separate specimens of the lamp terminals may be tested.

b. Examination of terminals: Method for evaluation of lugs and tabs shall apply.

4.7.3 Resistance to soldering heat (applicable to switches with solderable terminals, see 3.8). Switches shall be tested in accordance with MIL-STD-202-210. The following details shall apply:

a. Number of terminals to be tested: A minimum of two terminals of closed contacts per switch and two indicator light terminals (the indicator light terminals may be tested separately).

b. Depth of immersion in molten solder: Terminals shall be immersed to within .079 inch to .099 inch (2.0 mm to 2.5 mm) of the switch body.

c. Test condition letter: B.

d. Cooling time prior to final examinations and measurements: Not applicable.

e. Examinations and measurements:

(1) Before: None.

(2) After: Internal examination not required. Samples shall be subjected to Group IV testing in the qualification table.

Downloaded from http://www.everyspec.com

TABLE IX. Qualification table.

Inspection	Requirement paragraph	Test method paragraph
Group I (all sample units)		
Visual and mechanical examination	3.1, 3.5, 3.6 3.45 and 3.47	4.7.1
Solderability (when applicable) 1/	3.7	4.7.2
Resistance to soldering heat (when applicable) 1/	3.8	4.7.3
Contact resistance	3.9	4.7.4
Contact bounce (when specified, see 3.1)	3.10	4.7.5
Operating characteristics	3.11	4.7.6
Coincidence of operating and releasing points (when specified)	3.12	4.7.7
Permanency of marking (when specified) 1/	3.13	4.7.8
Group II (4 sample units)		
Terminal strength (2 sample units)	3.14	4.7.9
Strength of actuating means (2 sample units)	3.15	4.7.10
Strength of actuator (when applicable)	3.16	4.7.11
Strength of mounting bushing (2 sample units) (when applicable)	3.17	4.7.12
Lens orientation (when applicable)	3.18	4.7.13
Thermal shock	3.19	4.7.14
Vibration	3.20	4.7.15
Shock 2/	3.21	4.7.16
Acceleration (when specified, see 3.1)	3.22	4.7.17
Moisture resistance	3.23	4.7.18
Dielectric withstanding voltage	3.24	4.7.19
Operating characteristics	3.11	4.7.6
Seal (enclosures 2, 3, and 4)	3.25	4.7.20
Marking visibility	3.26	4.7.21
Group III (2 sample units)		
Salt spray (corrosion)	3.27	4.7.22
Dielectric withstanding voltage (enclosure 3)	3.24	4.7.19
Insulation resistance (enclosure 3)	3.28	4.7.23
Operating characteristics (enclosure 3)	3.11	4.7.6
Group IV (2 sample units)		
Short circuit	3.29	4.7.24
Dielectric withstanding voltage	3.24	4.7.19
Operating characteristics	3.11	4.7.6
Seal (enclosures 2, 3, and 4)	3.25	4.7.20
Marking visibility	3.26	4.7.21
Group V (2 sample units)		
Explosion	3.30	4.7.25
Sand and dust (when specified, see 3.1)	3.31	4.7.26
Operating characteristics	3.11	4.7.6
Seal (enclosures 2, 3, and 4)	3.25	4.7.20

See footnotes at end of table

Downloaded from http://www.everyspec.com

TABLE IX. Qualification table - Continued.

Inspection	Requirement paragraph	Test method paragraph
Group VI 3/		
Overload cycling (all group VI sample units)	3.32	4.7.27
Electrical endurance 3/	3.33	4.7.28
Resistive load, dc	3.33	4.7.28.2
Inductive load, dc	3.33	4.7.28.2
Motor load, dc	3.33	4.7.28.2
Lamp load, dc	3.33	4.7.28.2
Resistive load, alternating current (ac) 4/	3.33	4.7.28.2
Inductive load, ac 4/	3.33	4.7.28.2
Lamp load, ac 4/	3.33	4.7.28.2
Motor load, ac 4/	3.33	4.7.28.2
Contact resistance	3.9	4.7.4
Dielectric withstanding voltage 5/	3.24	4.7.19
Operating characteristics	3.11	4.7.6
Group VII (2 sample units)		
Mechanical endurance	3.34	4.7.29
Intermediate current (when specified, see 3.1) 6/	3.35	4.7.30
Low level life (when specified, see 3.1) 6/	3.36	4.7.31
Logic level circuit (when specified, see 3.1) 6/	3.37	4.7.32
Operating characteristics	3.11	4.7.6
EMI/RFI shielding (when specified)	3.38	4.7.33
Seal (enclosures 2, 3, and 4)	3.25	4.7.20
Group VIII (2 for each color)		
Illuminated colors	3.39	4.7.34
Luminance	3.40	4.7.35
Sunlight readability (when specified, see 3.1)	3.41	4.7.36
NVIS compatibility (when specified, see 3.1)	3.42	4.7.37
Stray lights (when specified, see 3.1)	3.43	4.7.38
Field of view	3.44	4.7.39

1/ Two sample units only. These two sample units shall be used for group IV inspections.
2/ Additional qualification of identical switches for method II (high-impact) shock will require four additional sample units for submission to group I and group II tests, using method II for the shock test.
3/ Two sample units for each electrical load (see 3.1).
4/ Unless otherwise specified, ac tests are to be 60 Hz. Where different current ratings for 60 Hz and 400 Hz are shown (see 3.1), both 60 Hz and 400 Hz tests are to be performed.
5/ Sea level dielectric withstanding voltage test (see 4.7.19) is to be conducted only on those units which are tested for sea level electrical endurance (see 4.7.28). Altitude dielectric withstanding voltage test (see 4.7.19) is to be conducted on those units which were tested for altitude electrical endurance tests (see 4.7.28).
6/ Two additional sample units.

Downloaded from http://www.everyspec.com

TABLE X. Group A inspection.

Inspection	Requirement paragraph	Method paragraph	Sampling plan
Subgroup 1 Visual and mechanical examination	3.1, 3.5, 3.6, 3.45 and 3.47	4.7.1	See 4.6.2.1.1 1/
Subgroup 2 Seal (enclosures 2, 3, and 4) Operating characteristics Dielectric withstanding voltage Contact resistance Illuminated colors Luminance Sunlight readability (when applicable)	 3.25 3.11 3.24 3.9 3.39 3.40 2/ 3/	 4.7.20 4.7.6 4.7.19.1 4.7.4 4.7.34 4.7.35 2/ 3/	See 4.6.2.1.2 2/
Subgroup 3 Contact bounce (when applicable)	3.10	4.7.5	See 4.6.2.1.4 4/
Subgroup 4 NVIS compatibility (when applicable)	5/	5/	See 4.6.2.1.4 5/

1/ At the option of the contractor, documented in-process inspection may be used to meet the materials (see 3.5) and design and construction requirements (see 3.6) provided all of the contractor's in-process control data on these tests are made available to the Government upon request. Only one sample unit per lot need be inspected for compliance to physical dimensions.

2/ At the option of the contractor, incoming or in-process inspection may be used to meet these requirements provided that they meet the acceptance criteria and all of the contractor's in-process control data on these tests are made available to the Government upon request.

3/ Visually inspect switches with sunlight readable displays in each lot against the appropriately colored standard switch. The switches used as visual standards shall be certified annually by performing the sunlight readability test.

4/ Two sample units per lot shall be tested for contact bounce (when applicable).

5/ One hundred percent test switches for light leak using NVIS viewing device in accordance with MIL-L-85762.

TABLE XI. Zero defect sampling plan.

Lot size	Number of switches to be tested	
	Subgroup 2 (major) 1/	Subgroup 1 (minor) 1/
1 - 8	All	All
9 - 12	All	5
13 - 50	13	5
51 - 90	13	7
91 - 150	13	11
151 - 280	20	13
281 - 500	29	16
501 - 1,200	34	19
1,201 - 3,200	42	23
3,201 - 10,000	50	29
10,001 - 35,000	60	35

1/ Major and minor defects are defined in section 6. Inspection for minor defects is applicable to visual and mechanical examination only.

Downloaded from http://www.everyspec.com

4.7.4 Contact resistance (see 3.9). Switch contacts shall be tested in accordance with MIL-STD-202-307.

4.7.4.1 Switch contact resistance. The following details shall apply:

a. Measurements shall be made between the terminals of the contacts of the same pole forming a switching circuit. Three measurements shall be made on each pair of switch contacts. The switch contacts shall be operated once between each measurement.

b. Test current: 0.1 ampere ±5 percent. After electrical endurance, use the electrical parameters of the electrical endurance test load.

c. Open-circuit test voltage: 6 volts direct current (V dc) ±1 V dc. After electrical endurance, use the electrical parameters of the electrical endurance test load.

d. Number of test actuations: Three.

e. Number of measurements per actuation: One measurement.

4.7.4.2 Lamp contact resistance. The following details shall apply:

a. Preparation for test: Lamp circuit continuity shall be established using the applicable test plug (see figure 2).

b. Test current: 0.1 ampere ± 5 percent.

c. Test voltage: 6 V dc ±1 V dc.

d. Number of test plug insertions: Three.

e. Number of measurements per insertion: One measurement.

4.7.5 Contact bounce (when specified) (see 3.10). The switch shall be connected to a test circuit in accordance with figure 3. The switch shall be mechanically operated at a velocity 6 inches ±2 inches (152.4 mm ±50.8 mm) per second. The contacts under test shall be closed five times and the duration of the contact bounce shall be monitored. The duration of the contact bounce shall be defined in accordance with figure 4. Any contact bounce which exceeds the maximum value specified shall constitute failure (see 3.1). The test shall be repeated until all sets of contacts have been measured for contact bounce.

4.7.6 Operating characteristics (see 3.11). Switches shall be measured for operating characteristics in accordance with the applicable requirements (see 3.1).

4.7.7 Coincidence of operating and releasing points (when specified) (applicable to multipole switches) (see 3.12). Coincidence of operating (releasing) points of all poles of a multipole switch shall be determined with suitable indicating circuits. The switch shall be rigidly held in a suitable fixture allowing the actuator to be moved in its intended manner. The actuator shall be advanced and retracted slowly and uniformly with no external vibratory influence while passing through the operating and releasing points, at a rate not exceeding .001 inch (0.025 mm) or 1 degree per second.

4.7.8 Permanency of marking (when specified) (see 3.13). Switches shall be tested in accordance with MIL-STD-202-215. The following details shall apply:

a. Portion of switch to be brushed: Brush strokes of each solvent solution shall be evenly divided between required identification, terminal, and circuit schematic markings.

b. Mechanical or electrical damage: Not applicable.

4.7.9 Terminal strength (see 3.14). Switches shall be mounted by their normal mounting means. The switches shall be examined after the test for evidence of breakage, loosening of terminals, or damage to the body of the switch. A circuit, such as a pilot light, shall be used to monitor for short circuiting during the test. No terminal shall be tested in more than one direction.

Downloaded from http://www.everyspec.com

4.7.9.1 Screw terminals. Screw terminals shall be subjected to the tests specified in 4.7.9.1.1 and 4.7.9.1.2.

4.7.9.1.1 Pull. The terminals shall be tested in accordance with MIL-STD-202-211. The following details and exceptions shall apply:

a. Test condition: A.

b. Direction of the pull: Along the axis of the terminal screw, perpendicular to the axis of the terminal screw, and in the direction most likely to cause failure.

c. Static force: See table XIII.

4.7.9.1.2 Torque. Terminals of the switches shall be tested in accordance with MIL-STD-202-211. The following exception shall apply: Test condition: E, except that for thread size 10-24, the torque shall be 24.0 pound-inches.

4.7.9.2 Solder terminals. Switches shall be tested in accordance with MIL-STD-202-211. The following details and exceptions shall apply:

a. Test condition: A.

b. Applied force: 5 pounds.

c. Direction of force: Parallel to the long axis of the terminal, perpendicular to the long axis of the terminals, and in the direction most likely to cause failure.

4.7.9.3 Wire-lead terminals. Switches shall be tested in accordance with MIL-STD-202-211. The following details and exceptions shall apply:

a. Test condition: A.

b. Applied force: 15 pounds.

c. Direction of force: In any direction (including the one most likely to cause failure).

4.7.9.4 Integrated wire terminals. Unless otherwise specified (see 3.1), integrated wire terminals shall be tested as follows:

a. Applied force: 15 pounds.

b. Duration: 5 seconds minimum.

c. Number of terminals to be tested: Two.

d. Direction of applied force:

(1) With the long dimension of the terminal contact vertical, the specified pull shall be applied directly downward.

(2) With the long dimension of the terminal contact horizontal, the specified pull shall be applied directly downward.

e. A terminal shall be tested only once in one direction.

4.7.10 Strength of actuating means (see 3.15). With the switches mounted by their normal mounting means, a static load of 25 pounds shall be gradually applied to the pushbutton and maintained for a period of one minute. The force resulting from application of the static load shall be in a direction to cause actuation of the switch. A circuit, such as a pilot light, shall be used to monitor for short circuiting during the test.

4.7.11 Strength of actuator (bushing mounted switches, see 3.16). With the switch mounted by its normal means, a torque of 5 pound-inches in a plane perpendicular to bushing or actuator and about the centerline of the actuator shall be applied to the actuator for a period of one minute.

Downloaded from http://www.everyspec.com

TABLE XII. Group B inspection.

Inspection	Requirement paragraph	Method paragraph	Sample Numbers										
			1	2	3	4	5	6	7	8	9	10	1/
Solderability (when applicable)	3.7	4.7.2	x	x									
Strength of mounting bushing (when applicable)	3.17	2/ 4.7.12	x	x									
Lens orientation	3.18	4.7.13	x	x									
Shock 3/	3.21	4.7.16	x	x									
Moisture resistance	3.23	4.7.18	x	x									
Salt spray (corrosion)	3.27	4.7.22			x	x							
Overload cycling	3.32	4.7.27					x	x	x	x			
Electrical endurance	3.33	4.7.28											
Inductive load, dc 4/	3.33	4.7.28.2							x	x			
Resistive load, ac 5/	3.33	4.7.28.2					x	x					
Mechanical endurance 6/	3.34	4.7.29									x	x	
Low-level life (when applicable)	3.36	4.7.31									x	x	
EMI/RFI shielding (when applicable) 7/	3.38	4.7.33									x	x	
Illuminated color	3.39	4.7.34											x
Luminance	3.40	4.7.35											x
Sunlight readability (when applicable)	3.41	4.7.36											x
NVIS compatibility (when applicable)	3.42	4.7.37											x
Dielectric withstanding voltage 9/	3.24	4.7.19					x	x	x	x			
Operating characteristics 8/	3.11	4.7.6	x	x	x	x	x	x	x	x	x	x	
Seal (when applicable)	3.25	4.7.20	x	x							x	x	
Marking visibility	3.26	4.7.21	x	x	x	x							

1/ Two samples for each color.
2/ Torque shall be applied to the switch body only.
3/ When method II (high impact) shock is applicable, two additional sample units are required for submission to sample number one and two tests, using method II for the shock test.
4 If rated for use at altitude, test at rated altitude only.
5/ Test at maximum temperature rating only. If resistive ac load was not required for qualification inspection (see 3.1), test resistive dc load.
6/ When low level life is specified, the low level life test shall be performed. When low level life is not specified, the mechanical endurance test shall be performed.
7/ The shielding efficiency test is not required provided the manufacturer has not made any changes in the design, construction, or material of the switch since the last EMI/RFI shielding efficiency group B inspection or initial qualification (whichever came later).
8/ On sample 3 and sample 4, applicable only to enclosure 3 and enclosure 4.
9/ Sea level dielectric withstanding voltage test (see 4.7.19) is to be conducted only on those units which are tested for sea level electrical endurance (see 4.7.28). Altitude dielectric withstanding voltage test (see 4.7.19) is to be conducted on those units which were tested for altitude electrical endurance tests (see 4.7.28).

4.7.12 Strength of mounting bushing (applicable to threaded mounted bushings) (see 3.17). Switches shall be mounted on a metal panel by their normal mounting means with the hardware specified. A torque of 15 pound-inches shall be applied to the mounting nut for 5 seconds maximum. The switch body shall be subjected to a torque of 5 pound-inches for 5 seconds maximum with the non-turn device normally mounted. Before testing of the non-turn device, the mounting nut shall be tightened with a maximum torque of 5 ounce-inches.

4.7.13 Lens orientation (see 3.18). With the pushbuttons mounted in an actuator which has met the requirements of 4.7.11, a torque of 5 pound-inches shall be applied to the plastic lens in plane perpendicular to and about the centerline of the pushbutton for a period of 1 minute. After the test, the lens indexing mechanism shall be examined for evidence of damage.

Downloaded from http://www.everyspec.com

TABLE XIII. Static values of force.

Thread size	Force in pounds
4 - 40	5
6 - 32	30
8 - 32	35
10 - 32	40
10 - 24	40
1/4 - 28	50

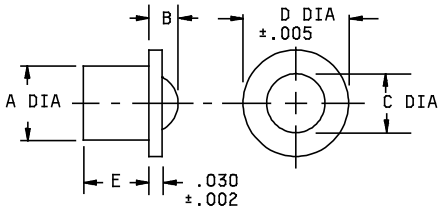

LAMP CIRCUIT RESISTANCE TEST PLUG

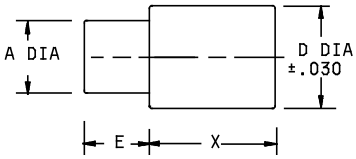

LAMP RETENTION TEST PLUG

Inches	mm	Inches	mm	Inches	mm	Inches	mm
.002	0.05	.060	1.52	.104	2.64	.181	4.60
.005	0.13	.072	1.83	.115	2.92	.247	6.27
.010	0.25	.080	2.03	.130	3.30	.285	7.24
.030	0.76						

Lamp	A +/- .002 dia	B +/- .005	C +/- .030 dia	D dia	E +/- .010	X
T-1	.155	.060	.080	.181	.104	See note 4
T-1 3/4	.247	.072	.130	.285	.260	

NOTES:
1. Dimensions are in inches.
2. Metric equivalents are given for general information only.
3. Both the lamp circuit resistance test plug and the lamp retention test plug may be of multi-piece construction providing, when assembled, it meets the specified requirements.
4. The "X" dimension shall be adjusted to provide a total weight of 5 grams +1 gram, -0 gram.
5. The test plug material shall be 1/2 hard brass for the lamp circuit resistance test plug.
6. Test plug may be suitably plated to resist corrosion.

FIGURE 2. Test plug.

Downloaded from http://www.everyspec.com

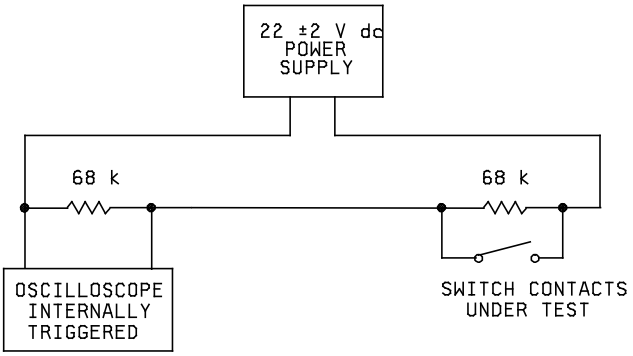

FIGURE 3. Contact bounce test circuit.

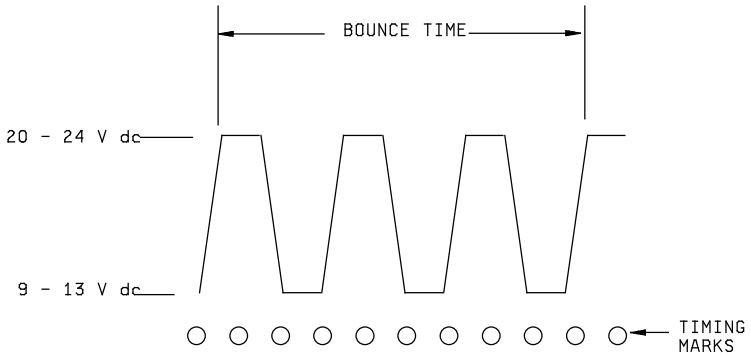

FIGURE 4. Typical recording of contact bounce.

Downloaded from http://www.everyspec.com

4.7.14 Thermal shock (see 3.19). Switches shall be tested in accordance with MIL-STD-202-107. The following details shall apply:

a. Test condition: A.

b. Measurements before and after cycling: Not applicable.

c. Examinations after test: Switches shall be examined for mechanical and electrical damage and loosening of rivets or other fastening devices.

4.7.15 Vibration (see 3.20). Switches shall be tested in accordance with MIL-STD-202. The following details and exceptions shall apply:

a. Test condition:

(1) For vibration grade 1: MIL-STD-202-201 (10 Hz-55 Hz).

(2) For vibration grade 2: MIL-STD-202-204, test condition A (10 Hz-500 Hz).

(3) For vibration grade 3: MIL-STD-202-204, test condition B (10 Hz-2,000 Hz).

b. Tests and measurements prior to vibration: Not applicable.

c. Mounting: Switches with lamps shall be rigidly mounted by their normal means on a rigid metal panel. The mounting fixture shall be free from resonance over the test frequency range. Switches that are designed to mate with connectors shall be tested using the complete connector assembly. If switches incorporate an edge-lit panel mounting spacer, one-half of the sample units shall be mounted with the spacer in front of the panel. The remaining half shall be mounted with the spacer behind the panel or without the spacer, as applicable.

d. Electrical load conditions: The electrical load shall consist of the monitor circuit only. In addition, magnetically held units shall be tested with 80 percent rated dc voltage applied to coils.

e. Measurements during vibration: All open and closed contact circuits shall be monitored for contact chatter in accordance with MIL-STD-202-310, test condition A. The lamp circuits shall be monitored by a similar circuit capable of detecting discontinuities of 10 ms or greater. Half of the units shall be tested with the actuating means in one position and the other half of the units shall be tested with the actuating means in an alternate position. Open circuits may be connected in parallel and monitored for closing, and closed circuits may be connected in series and monitored for opening. In the event of indication of contact instability, the test shall be modified by successive testing in the same plane to monitor contacts, switch by switch, to determine if a switch is defective.

f. Test and measurements after vibration: Switches shall be examined for evidence of broken, deformed, displaced or loose parts.

Downloaded from http://www.everyspec.com

4.7.16 Shock (see 3.21). Switches shall be tested as specified in 4.7.16.1, and in addition, when specified (see 3.1), switches shall also be tested as specified in 4.7.16.2. The following details and exceptions shall apply to method I and method II.

a. Electrical load conditions: The electrical load shall consist of the monitor circuit only.

b. Half of the units shall be tested with the actuating means in one position and the other half of the units shall be tested with the actuating means in an alternate position. Open circuits may be connected in parallel and monitored for closing and closed circuits may be connected in series and monitored for opening. In the event of indication of opening or closing of contacts greater than that allowed, the test shall be modified by applying successive identical blows in the same plane to monitor contacts, switch by switch, to determine if a switch is defective. Magnetically held units shall be tested with 80 percent rated dc voltage applied to coils. When testing momentary action switches all shall remain in the relaxed position.

c. Measurements before the test: Not applicable.

d. Mounting: Switches shall be mounted by their normal mounting means. If switches incorporate an edge-lit panel mounting spacer, one-half of the sample units shall be mounted with the spacer in front of the panel. The remaining half shall be mounted with the spacer behind the panel or without the spacer, as applicable.

4.7.16.1 Method I. Switches shall be tested in accordance with MIL-STD-202-213. The following details shall apply:

a. Test condition: B (75 g's, half-sine).

b. Measurements during test: Switch contact stability shall be continuously monitored in accordance with MIL-STD-202-310, test condition A.

c. Measurement after test: Switches shall be examined for evidence of broken, deformed, or displaced parts.

d. Mounting: Switches shall be mounted on a rigid metal panel.

4.7.16.2 Method II (when specified). Switches shall be tested in accordance with MIL-STD-202-207. The following details shall apply:

a. Measurements during test: Unless otherwise specified (see 3.1), switch contact stability shall be continuously monitored in accordance with MIL-STD-202-310, test condition E.

b. Measurement after test: Switches shall be electrically and mechanically operable.

c. Mounting: The standard mounting fixture shown on figure 207-4A of MIL-STD-202-207 shall be used.

4.7.17 Acceleration (when specified) (see 3.1 and 3.22). Switches shall be tested in accordance with MIL-STD-202-212. The following details and exceptions shall apply:

a. Test condition: A.

b. Acceleration force: 20 G.

c. The switches shall be monitored for opening of closed contacts and closing of open contacts with a circuit such as a pilot lamp. Half of the units shall be tested with the actuating means in one position and the other half of the units shall be tested with the actuating means in an alternate position (see 3.1 and 6.2). Magnetically held units shall be tested with 80 percent rated dc voltage applied to coils. When testing momentary action switches, all shall remain in the relaxed position.

Downloaded from http://www.everyspec.com

4.7.18 Moisture resistance (see 3.23). Switches shall be tested in accordance with MIL-STD-202-106. The following details and exceptions shall apply:

a. Mounting: By normal mounting means on a corrosion-resistant metal panel (extending beyond the switch) positioned 15 degrees from vertical. Half of the units shall be tested with the actuating means in one position and the other half of the units shall be tested with the actuating means in an alternate position. When testing momentary action switches, all shall remain in the relaxed position.

b. Polarization: During step 1 to step 6 inclusive, a polarizing voltage of 100 V dc shall be applied between current carrying parts and the metal panel. The negative polarity shall be applied to the metal panel. Steps 7a and 7b are not applicable.

c. Load voltage: Not applicable.

d. Final measurements: Within 5 minutes after conclusion of the test and while the switches are still wet, insulation resistance shall be measured as specified in 4.7.23.

e. Examinations after test: Switches shall be examined for evidence of corrosion, breaking, cracking, or spalling. Mounting hardware shall be removed at the end of the test.

f. Distilled or deionized water may be used for this test.

4.7.19 Dielectric withstanding voltage (see 3.24). Switches shall be tested in accordance with 4.7.19.1 and, when applicable, in accordance with 4.7.19.2.

4.7.19.1 At atmospheric pressure. Switches shall be tested in accordance with MIL-STD-202-301. These tests shall be performed with the switch contacts in normal position, and shall then be repeated for each other contact operating position. The following details shall apply:

a. Test potential: 1,000 volts rms.

b. Duration of application: One minute for qualification and group B tests; 5 seconds for group A tests.

c. Points of application:

(1) Between each terminal and exposed noncurrent carrying metal or grounded parts.

(2) Between adjacent terminals of mutually insulated circuits.

(3) Between all unconnected contact terminals of the same pole. This measurement is not applicable after electrical endurance.

d. Examination after test: Switches shall be examined for evidence of arcing, flashover, breakdown of insulation, and damage.

4.7.19.2 At reduced barometric pressure. Switches rated for operation above 10,000 feet shall be tested as specified in 4.7.19.1 and in accordance with MIL-STD-202-105. The following details and exceptions shall apply:

a. Test voltage: Unless otherwise specified, 400 volts rms.

b. Test condition: Unless otherwise specified, C.

4.7.20 Seal (when applicable) (see 3.1 and 3.25). Switches shall be tested as specified in 4.7.20.1, 4.7.20.2, or 4.7.20.3. If switches incorporate an edge-lit panel mounting spacer, one-half of the sample units shall be mounted with the spacer in front of the panel. The remaining half shall be mounted with the spacer behind the panel or without the spacer, as applicable. Following the test, switches shall be examined for water leakage and subjected to the dielectric withstanding voltage test. Unless otherwise specified (see 3.1), group A seal inspection shall consist only of examination of the seals for pinholes and other defects using lighted 3 diopter inspection equipment.

4.7.20.1 Splashproof (applicable to enclosure design 4) (see 3.25). With the switch mounted by its normal means, the switch shall be subjected to the splashproof test of MIL-STD-108.

Downloaded from http://www.everyspec.com

4.7.20.2 Watertight (applicable to enclosure design 3) (see 3.25). Switches shall be properly mounted with the specified mounting hardware in the bottom of an open container. The switches shall be subjected to the watertight test of MIL-STD-108. While submerged, the switches shall be manually operated for three complete cycles of operation.

4.7.20.3 Dripproof test (applicable to enclosure design 2) (see 3.25). With the switch mounted by its normal means, the switch shall be subjected to the dripproof test of MIL-STD-108, 15 degrees method, with a 5 gallon quantity of water flowing over the specimen for a period of 5 minutes duration. The water shall be directed within 12 inches above the test specimen.

4.7.21 Marking visibility (see 3.26). Switches shall be examined for legibility of required marking.

4.7.22 Salt spray (corrosion) (see 3.27). Switches shall be tested in accordance with MIL-STD-202-101 with associated mounting and terminal hardware assembled. The following details and exceptions shall apply:

a. Test condition: A.

b. Post test: Switches shall be examined for evidence of warping, cracking, excessive corrosion, or other damage.

4.7.23 Insulation resistance (see 3.28). Switches shall be tested in accordance with MIL-STD-202-302. The following details shall apply:

a. Test condition: B.

b. Points of measurement:

(1) Between each terminal and exposed noncurrent carrying metal or grounded parts.

(2) Between adjacent terminals of mutually insulated circuits.

(3) Between all unconnected contact terminals of the same pole.

These tests shall be performed with the switch in normal position, and shall then be repeated for other operating positions.

4.7.24 Short circuit (see 3.1 and 3.29). Switches shall be tested as specified in 4.7.24.1, method I, or when specified (see 3.1), switches shall be tested as specified in 4.7.24.2, method II.

4.7.24.1 Method I. The switch shall be inserted in a circuit calibrated to supply current equal to 60 times the rated resistive load at the lowest rated dc voltage specified (see 3.1). The switch shall be connected in series to a thermal-type circuit breaker or a fuse in accordance with figure 5. A circuit breaker shall be used for switches having a rated resistive load of 10 amperes or greater, and a fuse for switches having a rated resistive load less than 10 amperes. The wire shall be of a size for single use in free air as specified in table XIV as determined by the rated resistive load of the switch (see 3.1). If the rated load of the switch does not coincide with a wire size, the next larger wire size shall be used. The terminals shall be in accordance with SAE-AS7928. The circuit breaker shall be in accordance with SAE-AS58091 and cable and fuses shall be in accordance with MIL-PRF-15160 and table XIV. If the rated load of the switch does not coincide with a circuit breaker or fuse current rating, the next larger breaker or fuse shall be employed. Calibration shall be made with a substitute circuit breaker (or equivalent fuse), less the test switch and with the switch leads in the circuit. With both the switch under test and the circuit breaker in a closed position as shown on figure 5, the circuit shall be closed manually by switch S_1. A minimum of 2 minutes shall elapse between the successive closings of the switch. The test shall be conducted five times. For double-throw switches, half the switches shall be tested in one position, and the remaining half shall be tested in the other position.

4.7.24.2 Method II. Method II is similar to method I except as follows: The calibrated circuit shall be closed by the switch under test, and after the circuit breaker or fuse interrupts the circuit, the test switch shall be manually opened. This procedure shall be repeated ten times. After each closure, the test switch shall be returned to the "off" position, and the switch contacts shall be checked for proper opening by any suitable continuity test method. The circuit breaker shall be reset or the fuse replaced after each closure. The switch contacts under test must open after each closure operation, and there shall be no mechanical failure or damage to the switch case.

Downloaded from http://www.everyspec.com

4.7.25 Explosion (see 3.30). Switches shall be tested in accordance with MIL-STD-202-109. The following detail shall apply:

a. Electrical load: Switches shall be operated at their rated inductive current and at their maximum rated dc voltage.

b. The switches, including the lamp circuits, shall be checked for electrical and mechanical operation at the conclusion of the test.

4.7.26 Sand and dust (when specified) (see 3.1 and 3.31). Switches shall be tested in accordance with MIL-STD-202-110. The following details apply:

a. The second 6-hour test at 63°C (145° F) shall be performed immediately after reaching stabilization in step 2.

b. During exposure to sand and dust, the switches shall be mechanically operated at a frequency of 60 cycles ± 5 cycles per minute for 2,500 cycles.

c. Post test examination: Switches shall be examined for operating characteristics and circuit continuity.

4.7.27 Overload cycling (see 3.32). Each switch to be tested for electrical endurance shall first be tested for overload cycling at room ambient conditions, using the same voltage, electrical frequency, and the same pairs of contacts that will subsequently be used for the electrical endurance test. The switches shall close and open the overload current of a resistive circuit equal to 150 percent of the resistive load rating at the particular voltage and electrical frequency. The cycling rate shall be five cycles to six cycles of operation per minute (see 6.4.12). Fifty cycles of operation shall be performed. The duty cycle shall be approximately 50 percent on, 50 percent off.

4.7.28 Electrical endurance (see 3.33). Switches shall make and break the specified electrical load for 25,000 cycles of operation (see 6.4.12) unless otherwise specified (see 3.1). The cycling shall be continuous, except at the option of the contractor, cycling may be interrupted after each 5,000 cycles of operation (see 6.4.12). The test sample shall have two lines of legend, block characters, .09 inch to .12 inch (2.29 mm to 3.05 mm) high, which utilize at least three-fourths of the maximum horizontal length of the legend area. Following the test, the switches shall be examined for damage and legibility of the legend.

4.7.28.1 Conditions.

a. Unless otherwise specified (see 3.1), test loads shall be arranged so that an independent load shall be provided for each pole.

b. Switches shall be continuously monitored and recorded to determine whether any contact has failed to open or close its individual circuit in the proper sequence. The monitoring circuit shall not shunt inductive components of inductive loads or switch contacts.

c. Temperature rise shall be measured (see 4.7.28.3).

d. The duty cycle shall be approximately 50 percent on and 50 percent off for resistive, inductive, and motor loads. The duty cycle shall be approximately 30 percent on and 70 percent off for lamp loads.

e. The cycling rate shall be 10 cycles to 12 cycles per minute.

f. When applicable, half of the switches shall be normally open types and the other half shall be normally closed types. For double throw switches, one-half of the switches shall be tested with the load circuit connected to one throw, and the remaining half of the switches shall be tested with the load circuit connected to the other throw.

Downloaded from http://www.everyspec.com

g. In any of the specified load tests, each conductor shall be of an applicable size for single use in free air as listed in table XIV. If the switch rating under test does not coincide with a wire size, the next larger diameter wire shall be used.

h. One side of the power supply, one side of the test load, the switch mounting plate, metal case (if applicable), and the actuating member, if metal, shall be connected to a common ground.

i. All lamps (or LED's when specified, see 3.1) shall be continuously energized at their maximum rated voltage during cycling. MS3338-6839 or MIL-DTL-6363/8-5 lamps (or industry equivalent) or industry lamp number 86 shall be used, as applicable.

j. Temperature conditions during electrical endurance load cycling are as specified in table XV. Altitude electrical tests shall be conducted at room temperature conditions only. Switches which are tested to resistive, inductive, and lamp loads shall be subjected to the minimum number of operating cycles at maximum temperature as specified (see 3.1). Switches which are tested to motor loads shall be subjected to the minimum number of operating cycles at room ambient conditions.

k. The dc power source shall provide the rated or inrush current on resistive loads within 300 µs after closing the circuit with a bounceless contact device. Oscillograms shall be provided with the test report documenting this characteristic.

l. Electrical tolerances are as follows:

Voltage: ±5 percent for dc, ±7 percent for ac.

Frequency: ±5 percent.

Current: ±5 percent.

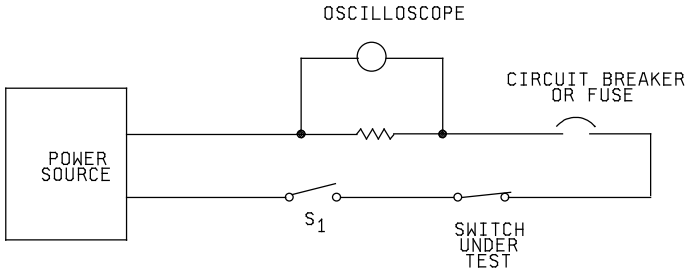

FIGURE 5. Circuit diagram for short circuit test.

Downloaded from http://www.everyspec.com

TABLE XIV. Short circuit and electrical endurance wire size, and circuit breaker or fuse designations.

Resistive rating at lowest voltage, in amperes	Wire size	Circuit breaker or fuse
Less than 10	AN-20	MIL-PRF-15160/2, characteristics A rating, as applicable
10	AN-18	MS25244-10
15	AN-18	MS25244-15
18	AN-16	MS25244-20
20	AN-16	MS25244-20
25	AN-14	MS25244-25
30	AN-14	MS25244-30
40	AN-12	MS25244-50

TABLE XV. Temperature conditions during electrical endurance load cycles.

		Inductive		Resistive		Lamp		Motor	
		AC	DC	AC	DC	AC	DC	AC	DC
		Percent of electrical load cycles							
High temperature	Sea level	100	100	100	100	100	100		
Room ambient temperature	Sea level							100	100
	Altitude	100	100	100	100	100	100		

4.7.28.2 Loads. Voltage, current, frequency, altitude, and operating cycles shall be as specified (see 3.1). The loads are as follows:

a. Resistive load, dc.

b. Inductive load, dc: Inductive dc loads shall use inductors which have response and stored energy values as indicated on figure 6 and figure 7. An alternate method of selecting DC inductors can be found in Appendix A.

c. Lamp load, dc: A tungsten lamp, which provides the rated, steady-state lamp current shall be used. The circuit shall be arranged so as to provide a minimum of 15 seconds cooling time preceding each time a lamp is energized. Only tungsten lamps having a nominal wattage not to exceed 50 watts, at the voltage specified (see 3.1 and 6.2), shall be used to make up the load.

d. Motor load, dc: The duration of the inrush current shall be not less than .05 second. Only resistive components shall be used. Switches shall make six times the rated load and break the rated load.

e. Resistive load, ac.

f. Inductive load, ac: Inductive ac load test circuits shall consist of inductive and resistive load element connected in series. The circuit parameters shall be rated inductive load current at 0.7 ±0.05 lagging power factor at 115 volts.

g. Lamp load, ac: Similar to 4.7.28.2c above, except that the rated ac voltage shall be used. Only tungsten lamps having a nominal wattage not to exceed 200 watts, at the voltage specified, shall be used to make up the load.

h. Motor load, ac: The duration of the inrush shall be not less than .05 second. Only resistive components shall be used. Switches shall make six times the rated load and break the rated load.

Downloaded from http://www.everyspec.com

4.7.28.3 Temperature rise measurement. The switches tested for electrical endurance at the rated resistive current shall be tested immediately thereafter for temperature rise. The switch terminal temperature shall be measured using a suitable thermocouple (28 AWG to 32 AWG), while the switch is continuously carrying its maximum resistive load. The test shall be performed with the switch in still air which has a temperature of 25°C ±5°C. The temperature measuring thermocouple shall be attached to the terminals which were carrying current during the overload and endurance tests. If wire leads are provided, the measurement shall be made on the copper conductor at the point of the entrance of the leads to the switch. If wire leads are not provided, the connections to the switch shall be made with not less than 1 foot length copper wire of the size used during the endurance test and the measurement shall be made on the terminal at a point adjacent to the insulating medium. The test current shall be passed through the switch without interruption. The terminal temperature shall be recorded at not less than 5 minute intervals until the temperature has stabilized or until a minimum period of 2 hours has elapsed. The temperature shall be considered stable when three successive readings taken at 5 minute intervals indicate no change in temperature. The ambient temperature shall be measured during the same period at a point sufficiently far from any heat source (including the test switch) to obtain a representative temperature value for the air reaching the switch by convection. The temperature rise shall then be calculated by subtracting the lowest recorded ambient temperature from the highest recorded switch terminal temperature.

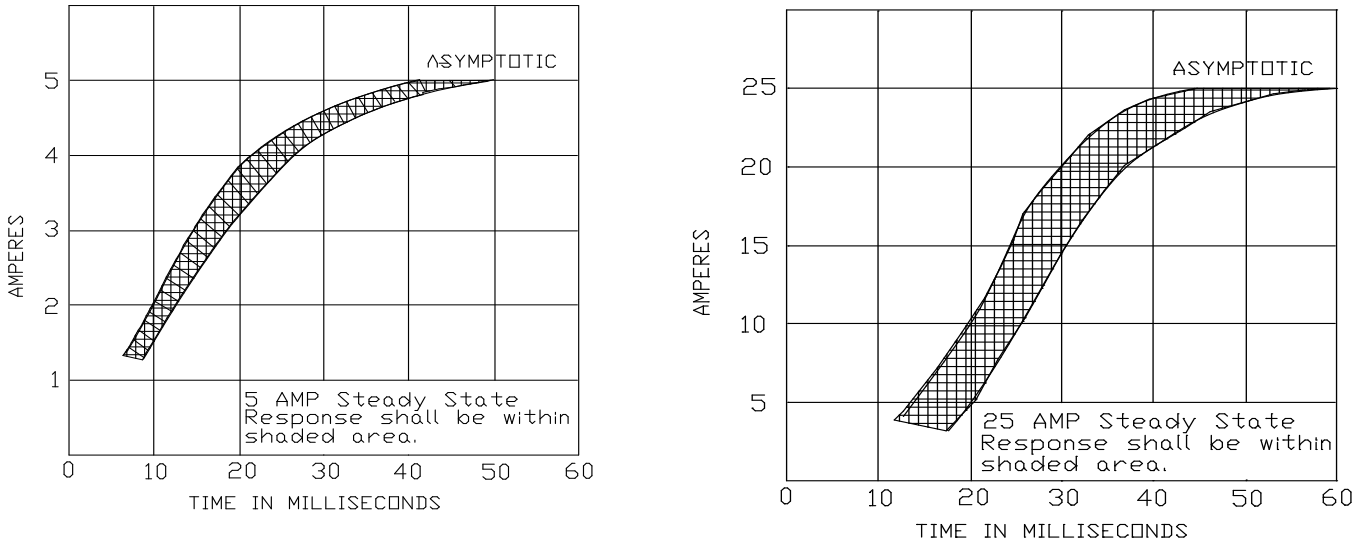

FIGURE 6. Response (current versus time) type I inductors only.

Downloaded from http://www.everyspec.com

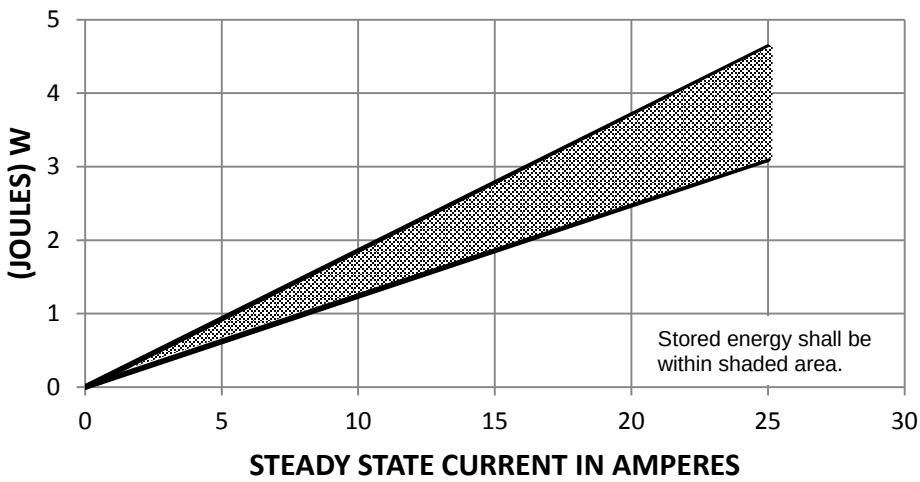

FIGURE 7. Stored energy (joules versus current) type I inductors only.

4.7.29 Mechanical endurance (see 3.34). Unless otherwise specified (see 3.1), switches shall be tested as follows:

a. The switches shall be subjected to 5,000 cycles of operation (see 6.4.12) at -55°C ±2°C, 10,000 cycles of operation at 85°C ±2°C, and 35,000 cycles of operation at room temperature. The cycling rate shall not exceed 100 cycles of operation per minute and shall not be less than 10 cycles of operation per minute. Each cycle of operation shall be the movement of the actuating means through the entire range of its travel (from free position to full overtravel position and return to the fully released position) causing the switch contacts to change from one position to another and then return to their original position. All switches except those with push-pull operation shall be returned from their depressed position solely by the internal mechanism of the switch. Switches shall be continuously monitored to determine whether any contact has failed to open or close its individual circuit in proper sequence. Lamps shall not be energized.

b. After tests are conducted as specified in 4.7.29a, a lamp retention test plug in accordance with figure 2 shall be inserted (to complete engagement) and withdrawn five times. The test plug shall then be installed and the lens held so that the base on the test plug points directly downward.

c. After tests are conducted as specified in 4.7.29b, a modular switch assembly, as applicable, shall be completely engaged and removed from the modular indicator light assembly a minimum of 10 times. The lens lampholder assembly shall be completely removed, relamped, and installed a minimum of 100 times. After the tests, the switch shall be examined for any physical damage, that is sticking of switch actuator, loose latching of lens assembly, or broken, deformed clips or springs.

Downloaded from http://www.everyspec.com

4.7.30 Intermediate current (when specified) (see 3.1 and 3.35). One throw of each pole of the switches under test shall be connected into a circuit having a 27 V dc +3 V dc, -0 V dc source and a load consisting of the coil of relay M5757/10-039 of MIL-R-5757/10, or equivalent. Switch performance during the test shall be continuously monitored by a device which indicates failure of the relay to close and open during each cycle of operation. Unless otherwise specified (see 3.1), the number of operations shall be 50,000 cycles. The switch shall be cycled by a mechanical actuating device. During each cycle of operation, the actuating member of the switch shall be moved once to each extreme of its travel. Double-throw switches shall be tested with half of the sample lot controlling the load with the normally open contacts and half controlling the load with the normally closed contacts. Each multipole switch shall be connected with all normally open circuits loaded simultaneously or all normally closed circuits loaded simultaneously. The frequency of actuation shall be compatible with the time response characteristics of the relay monitoring device. Prior to testing, each switch shall be subjected to a 24-hour minimum conditioning in air at the maximum rated temperature. The test shall then be performed at the following operating temperatures:

a. Twenty-five percent of the test cycles at the minimum temperature specified.

b. Fifty percent of the test cycles at room ambient temperature.

c. Twenty-five percent of the cycles at the maximum temperature specified.

Switch contact resistance shall be measured following the test using the electrical parameters of the minimum current test load. Three measurements shall be made on each contact subjected to the intermediate current test.

4.7.31 Low level circuit (when specified) (see 3.1 and 3.36). Switches shall be tested as specified in MIL-STD-202-311. The following details shall apply:

a. Contact load: Each set of normally open and normally closed contacts shall be connected to individual loads.

b. Operate cycles: Fifty thousand at a rate not to exceed 60 cycles per minute with "ON" and "OFF" times approximately equal.

c. Operating temperatures:

(1) Twenty-five percent of the test cycles at the minimum temperature specified.

(2) Twenty-five percent of the test cycles at room ambient temperature.

(3) Fifty percent of the cycles at the maximum temperature specified.

4.7.32 Logic level circuit (when specified, see 3.1) (see 3.37). Switches shall be tested in accordance with ECIA-448-1, method 17 as follows:

a. Contact load: Each switch contact shall make, carry, and break a resistive load of 10 mA ±1 mA at an open circuit voltage of 5.0 V dc ±0.5 V dc. Both normally open and normally closed contacts shall be loaded. Contacts shall be connected to individual loads.

b. Cycles of operation: Unless otherwise specified (see 3.1), the number of operations shall be 50,000 cycles. The actuation rate shall be 120 cycles per minute maximum. Unless otherwise specified (see 3.1), each stroke of the actuating means shall include the full range of travel from free position to full overtravel position and return to the fully released position. The actuation force applied to the switch actuator shall not exceed the force required to reach the extreme position of travel unless so authorized by the manufacturer.

c. Monitoring: During each closure of the contact, the voltage drop across the switch terminals shall be monitored for a duration of no less than 50 percent of each contact static closure. The switch contacts need not be monitored until 10 ms after the initial contact closure to exclude any contact bounce. During each opening of the contacts, the voltage drop across the switch terminals shall be monitored for a duration of no less than 50 percent of each contact opening. The monitoring device shall either record the number of contact closures at which sticks or misses occur, or discontinue the test when sticks or misses occur.

4.7.33 EMI/RFI shielding (when applicable) (see 3.38). Switches which are equipped with EMI/RFI shielding shall be tested as specified in 4.7.33.1, or when specified (see 3.1), switches shall be tested as specified in 4.7.33.2.

Downloaded from http://www.everyspec.com

4.7.33.1 Positive grounding. Resistance between the mounting bushing or bezel and the EMI/RFI shield shall be measured in accordance with MIL-STD-202-307. The following details and exceptions shall apply:

a. Method of connection: Between a suitable exterior point on the mounting surface and the screen (lens may be drilled for access to screen).

b. Test current: 100 milliampers ±10 milliamperes.

c. Open circuit test voltage: 6 V dc ±1 V dc.

d. Number of measurements per activation: One in free position and one in full plunger overtravel position. There shall be no exterior force applied to plunger during measurement of resistance in free position.

4.7.33.2 Shielding efficiency (when specified, see 3.1 and 6.2). Switches shall be tested utilizing a test setup (or equivalent) as shown on figure 8. Measurements shall be made as follows:

a. With the door open and the antennas in the "initial setup" position, establish a test level over the 200 MHz to 1 GHz range such that the received signal level is at least as many dB above the RF ambient level as that of the shielded enclosure attenuation.

b. Record the received signal level and the signal generator output level. Repeat measurements at 100 MHz, 200 MHz, 400 MHz, 600 MHz, 800 MHz and 1,000 MHz.

c. Move the antennas to the final test positions, close the door and with an RF-tight blank panel between the antennas, measure the integrity of the enclosure by setting the signal generator to the same output and record the received signal level for each frequency used in 4.7.33.2b. The shielded enclosure attenuation is then calculated using the following equation:

$$\text{Attenuation (dB)} = 20 \log \frac{E1}{E2}$$

Where E1 is the receiver reading in 4.7.33.2b and E2 is the receiver reading in 4.7.33.2c.

d. Mount the test switch in the blank panel with the rear of the switch outside of the shielded enclosure (toward the signal generator antenna). The switch shall be mounted as it would be for normal installation using the mounting hardware supplied or recommended. Repeat the measurements of 4.7.33.2c above and calculate the shielding attenuation of the switch using the new receiver readings.

4.7.34 Illuminated colors (see 3.39). The chromaticity shall be determined by spectrographic or visual means, as specified below. Unless otherwise specified (see 3.1), lamps used for chromaticity testing shall have a calibrated mean spherical candle power of .34 ±.02 for T-1-3/4 lamps and .15 ±.02 for T-1 lamps.

a. Method I: Spectrophotometer - flat slab: Chromaticity shall be determined using a spectrophotometer, flat slab material of the same density and thickness of the shaped filter, and necessary calibration filters.

b. Method II: Spectroradiometric - Chromaticity shall be determined using a spectroradiometer, a complete illuminated push button assembly, calibrated lamps of specified color temperature, and necessary calibration filters.

c. Method III: Visual comparator - Chromaticity shall be determined by a color comparator, necessary high and low limit plastic or glass filters of known chromaticity, and calibrated light sources of specific color temperature.

4.7.35 Luminance (see 3.40). Unless otherwise specified (see 3.1), all luminance measurements shall be taken in completely dark surroundings. All readings shall be point readings and averaged. Luminance readings shall be taken by a calibrated photoelectric photometer. Alternately, readings may be taken with a calibrated video photometer. In this case, readings may be point readings or be the average of the total illuminated area of the character. Luminance may be taken without the legend installed if the legend material is not a significant part of the illumination system. Unless otherwise specified (see 3.1), lamps used for luminance testing shall have a calibrated mean spherical candlepower of .34 ± .02 for T-1 3/4 lamps and .15 ± .02 for T-1 lamps. For points of measurements see figure 9.

Downloaded from http://www.everyspec.com

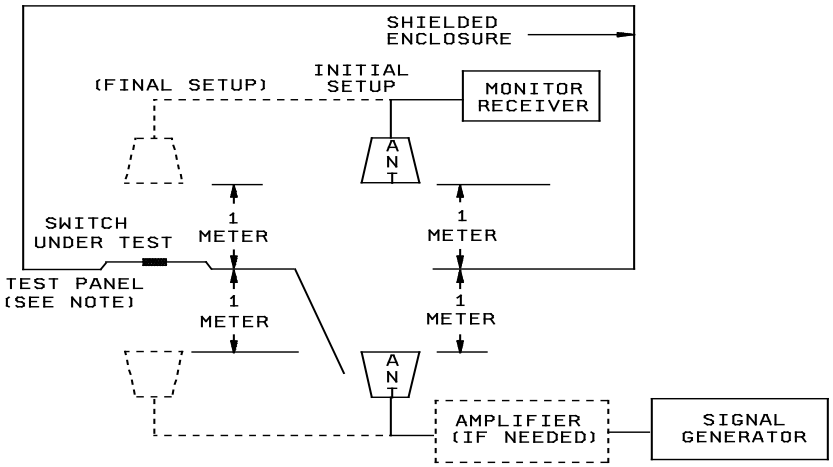

NOTE: Test panel shall be located in the chamber wall at least 1 meter from any corner and at least 1 meter from floor and ceiling.

FIGURE 8. Block diagram of switch shielding efficiency test.

4.7.36 Sunlight readability (when specified) (see 3.1 and 3.41). A light source of 3,000 degrees to 5,000 degrees Kelvin color temperature shall be directed at an angle of ϕ_1 = 15 degrees ±2 degrees to the normal of a diffuse reflectance standard (pressed barium sulphate or PTFE powder (polytetrafluorethylene resin), (see figure 10). The size of the light source shall be limited so that $\theta \leq 20$ degrees. A photometer shall be positioned at an angle of ϕ_2 = 15 degrees ±2 degrees to the normal of the reflectance standard. The light source shall be adjusted to produce 10,000 foot candles illumination on the reflectance standard as measured by the photometer. The reflectance standard shall then be removed and replaced by the viewing surfaces of the display to be tested. Using this test configuration, the luminance of the legend, both illuminated and nonilluminated, plus that of the adjacent background areas, shall be measured. Three luminance readings per legend character shall be taken (see figure 9). From these readings, the following contrast ratios can be calculated for each character:

The ON / BACKGROUND contrast $C_L = \frac{B2 - B1}{B1}$

The OFF / BACKGROUND contrast $C_{UL} = \frac{B3 - B1}{B1}$

B1 = Average background luminance
B2 = Average character luminance, lighted
B3 = Average character luminance, unlighted

The test shall be repeated with ϕ_1 and ϕ_2 = 30 degrees ±2 degrees. Normal production units shall be tested. The sample units shall have two lines of characters which utilize at least three-fourths of the maximum horizontal length of the legend. The contrast readings for the characters with the highest and lowest average contrast on each unit shall be reported.

4.7.37 NVIS compatibility (see 3.42) (when specified, see 3.1). The test procedure for measuring luminance, chromaticity and spectral radiance shall be in accordance with MIL-L-85762 for illuminated controls (for NVIS green A and B), caution signals (for NVIS yellow), and warning signals (for NVIS red).

Downloaded from http://www.everyspec.com

4.7.38 Stray lights (when specified) (see 3.1 and 3.43). When switches are tested for stray lights, a photometric measurement shall be made on stray light areas as determined from visual inspection. To determine stray light emitted at acute angles to the display face, a flat-white neutrally reflecting surface of 85 percent ±5 percent reflecting shall be placed perpendicular to the front face and parallel to the top edge (horizontally) at a distance of 1 inch (25.4 mm) from the switch. A minimum of five (above display, upper third, center of display, lower third, and below display) sets of brightness-readings shall be made. The brightness readings shall be made perpendicular to the reflecting surface at a distance of 1 inch (25.4 mm) in front of the display (or at any point on the reflecting surface that appears to be reflecting stray light from the display). The reflecting surface shall then be positioned parallel to a side edge and at least five more sets of readings shall be made in the same manner as the above. All readings shall fall within the limits specified in 3.43.

4.7.39 Field of view (see 3.44). The switches shall be mounted in a vertical position with the character(s) displayed on the screen. Unless otherwise specified (see 3.1), the screen shall be viewed from a distance of 3 feet, at all angles up to 40 degrees to a line perpendicular to the viewing surface.

5. PACKAGING

5.1 Packaging. For acquisition purposes, the packaging requirements shall be as specified in the contract or order (see 6.2). When actual packaging of materiel is to be performed by DoD personnel, these personnel need to contact the responsible packaging activity to ascertain requisite packaging requirements. Packaging requirements are maintained by the Inventory Control Point's packaging activity within the Military Department or Defense Agency, or within the Military Department's System Command. Packaging data retrieval is available from the managing Military Department's or Defense Agency's automated packaging files, CD-ROM products, or by contacting the responsible packaging activity.

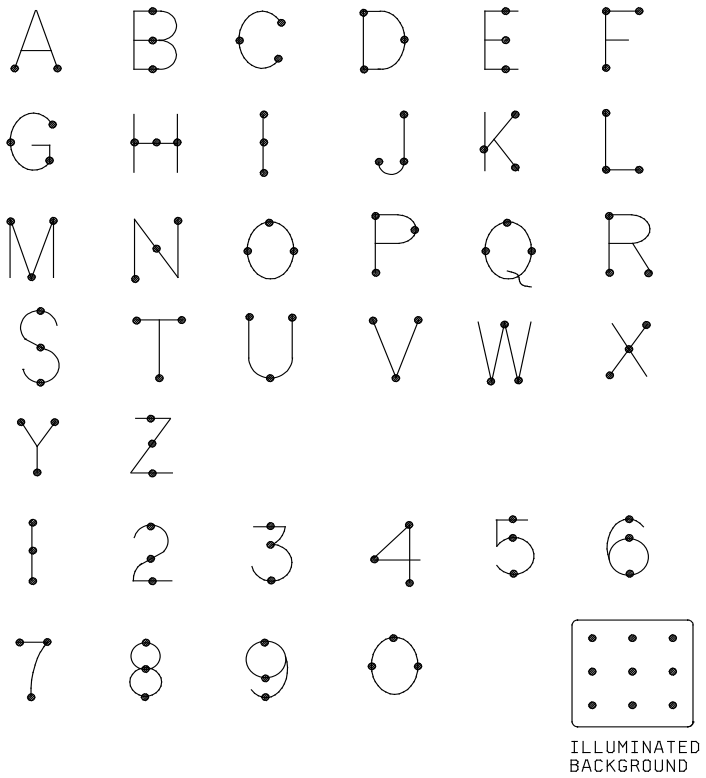

NOTE: Peripheral points are located midway between center line and edge of display area.

FIGURE 9. Luminance measurement points.

Downloaded from http://www.everyspec.com

6. NOTES

(This section contains information of a general or explanatory nature that may be helpful, but is not mandatory.)

6.1 Intended use. The switches covered by this specification are intended for use as panel displays and switching devices in ac and dc applications. Multipole switches are not to be used on polyphase circuits exceeding 115 volts line to line. The switches covered by this specification are military unique due to the fact that these devices must be able to operate satisfactorily in military systems under the following demanding conditions: -55°C to +85°C operating temperature range, 15 Gs of vibration, 75Gs of shock, 96 hours of salt spray, 15Gs of acceleration, 25,000 cycles of endurance at the maximum temperature. In addition these military requirements are verified under a qualification system. Commercial components are not designed to withstand these military environmental conditions.

6.2 Acquisition requirements.

6.2.1 Category I switches (items covered by specification sheets and identified by a PIN, see 3.2.1). Acquisition documents must specify the following:

a. Title, number, and date of this specification.

b. Title, number, and date of the applicable specification sheet and the PIN.

c. Packaging requirements (see 5.1).

d. Type and amount of hardware to be included with switch, if other than that specified on the applicable specification sheets.

6.2.2 Category II switches (qualified switches with modification, see 3.2.2). Acquisition documents must specify the following:

a. Title, number, and date of this specification.

b. Title, number, and date of the applicable specification sheet and the PIN.

c. Packaging requirements see (5.1).

d. Type and amount of hardware to be included with switch, if other than that specified on the applicable specification sheets.

e. Switch is category II.

f. PIN of qualified switch.

g. Manufacturer's PIN of modified switch (see 3.45.1(b)).

h. Details of the variations from the specification sheet. A copy of the drawing furnished, including the description of the variations from the specification sheet, should be sent to the Defense Supply Center Columbus, Post Office Box 3990, Columbus, OH 43216-5000.

i. Inspection requirements (in addition to group A): To verify suitability of variations from category I switches. Available manufacturing test data showing compliance may be substituted as meeting these requirements at the option of the contracting activity.

(1) Tests to be performed (if any).

(2) The laboratory at which inspection is to be performed.

(3) Samples and submission of data, if other than that specified.

Downloaded from http://www.everyspec.com

6.3 Qualification. With respect to products requiring qualification, awards will be made only for products which are, at the time of award of contract, qualified for inclusion in Qualified Products List (QPL) whether or not such products have actually been so listed by that date. The attention of the contractors is called to these requirements, and manufacturers are urged to arrange to have the products that they propose to offer to the Federal Government tested for qualification in order that they may be eligible to be awarded contracts or orders for the products covered by this specification. Information pertaining to qualification of products may be obtained via email to vqp.chief@dla.mil or from the DLA Land and Maritime, Attn: DLA Land and Maritime-VQP, 3990 East Broad Street, Columbus, OH 43213-1199.

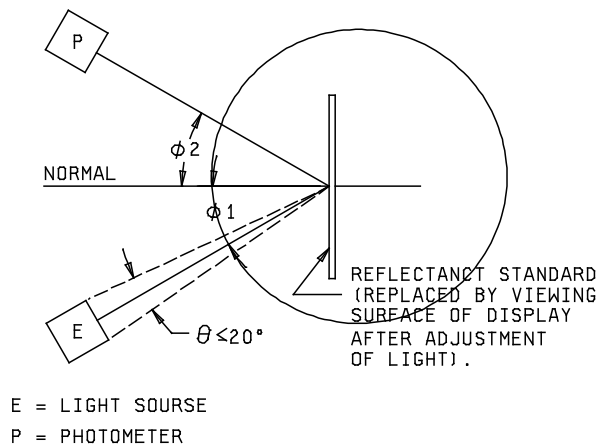

FIGURE 10. Specular reflectance test for sunlight readability.

6.4 Definitions.

6.4.1 Switch assembly. Switch assembly is one or more switches that are permanently fixed to a bracket having a common actuating means, that is, lever, rocker, button, or plunger.

6.4.1.1 Manual switch assembly. A manual switch assembly is one or more switches adapted to or intended for hand operation, i.e., to be depressed or operated manually and subject to operator variations.

6.4.2 Actuator. The switch actuator is the mechanism of the switch or housing which, when moved as intended, will operate the contacts.

6.4.3 Actuator free position. Actuator free position is the initial actuator position when there is no external force (other than gravity) applied on the actuator.

6.4.4 Contact separation. The contact separation distance of a switch is the minimum open gap distance between the stationary and movable contacts or live parts connected thereto, with moving contact member in the open position.

6.4.5 Actuating force or torque. Actuating force or torque is the force or torque applied to the actuator to operate the contacts.

6.4.6 Releasing force or torque. The releasing force or torque is the value to which the force or torque on the actuator must be reduced to permit the contacts to return to the unoperated position after operation.

6.4.7 Overtravel force or torque. Overtravel force or torque is the force or torque applied to actuating mechanism to move the actuator to the overtravel limit position.

Downloaded from http://www.everyspec.com

6.4.8 Contact bounce time. The contact bounce time is the total time between the initial contact and the cessation of contact opening due to transfer mechanism disturbance. Dynamic contact voltages due to resistance fluctuations or "white noise" shall not be included in contact bounce time.

6.4.9 Enclosure. An enclosure is an auxiliary housing providing protection and means for mounting and actuating of the basic switch.

6.4.10 Legend. The inscribed message (words, numbers, symbols, etc.) on the face of the switch which conveys switch function to or signals the operator.

6.4.11 Sunlight readable. A switch with a legend which is visible under direct sunlight conditions when illuminated and hidden when not illuminated.

6.4.12 Cycle of operation. A cycle of operation is the movement of the actuating means through the entire range of its travel causing the switch contacts to change from one position to another position and then return to their original position. Each stroke of the actuating means includes a full range of travel from free position to full overtravel position and return to the fully released position.

6.4.13 Intermetallic contact. The finishing of metallic areas to be placed in intimate contact by assembly presents a special problem, since intermetallic contact of dissimilar metals results in electrolytic couples which promote corrosion through galvanic action. To provide the required corrosion protection, intermetallic couples are restricted to those permitted by MIL-STD-889.

6.4.14 Gold contacts. Gold contacts are contacts in which the mating surfaces are gold or gold alloy throughout the rated life of the switch. (In some instances, gold plating may be used for shelf life or multi-rating capability and is fully expected to be destroyed during life.)

6.4.15 Silver contacts. Silver contacts are contacts in which the mating surfaces are silver or silver alloy throughout the rated life of the switch.

6.4.16 Major defect. A defect that could result in a failure or that will reduce the usability of the switch for its intended purpose.

6.4.17 Minor defect. A defect that is not likely to reduce the usability of the switch for its intended purpose. It may be a departure from established standards having no significant bearing on the effective use or operation of the switch.

6.4.18 NVIS. A system which uses image intensifier tubes to produce an enhanced image of a scene in light conditions too low for normal navigation and pilotage.

6.5 Human engineering. Government contracts commonly specify that military standard components be used and that MIL-STD-1472, Human Engineering Design Criteria For Military Systems, Equipment and Facilities, applies. Due to performance and environmental requirements, or other factors, military specification switches frequently do not meet the requirements of MIL-STD-1472. To provide the desired operability, it is suggested that equipment designers select the specification switches which can most closely conform to the human interface requirements of MIL-STD-1472 without sacrificing reliability.

6.6 Subject term (key word) listing.

Controls
Fluorosilicone
Legend
Light, indicator
NVIS
Polytetrafluorethylene

6.7 Part or Identifying Number (PIN). See 1.3.

6.8 Dissimilar metals (see 3.5.1.2). Dissimilar metals and compatible couples are defined in MIL-STD-889.

Downloaded from http://www.everyspec.com

6.9 Insulation (see 3.5.2).

6.9.1 Ceramic. It is recommended that SAE AMS-I-10 grade L422 be considered for ceramic materials.

6.9.2 Thermoplastic. It is recommended that thermoplastic materials be tested in accordance with MIL-M-24519 to the requirements specified in 3.5.2.

6.10 Rubber (see 3.5.3). It is recommended that rubber parts in accordance with A-A-59588 or SAE-AMS-R-25988 be considered for use.

6.11 Potting compounds (see 3.5.4). It is recommended that potting compounds that meet the hydrolytic stability requirements of MIL-PRF-8516, MIL-PRF-23586, MIL-M-24041, or MIL-I-16923 be considered for use.

6.12 Finish. It is recommended that MIL-A-8625 or MIL-C-5541 be used for meeting the requirement of this specification for external parts finish and MIL-C-5541 be used for meeting the requirements of this specification for internal parts finish.

6.13 Terminal finishes and platings (see 3.6.2.1, 3.6.2.2, 3.6.2.3).

6.13.1 Gold plating. It is recommended that SAE-AMS2422, type III, class 1 be considered for meeting the gold plating requirements of this specification.

6.13.2 Tin lead plating. It is recommended that SAE-AMS-P-81728 be considered for meeting the tin lead plating requirements of this specification.

6.13.3 Nickel plating. It is recommended that SAE-AMS-QQ-N-290 be considered for meeting the nickel requirements of this specification.

6.13.4 Silver plating. It is recommended that ASTM-B700 be considered for meeting the silver requirements of this specification.

6.13.5 Hot soldering dip. It is recommended that solder dip (60-40 tin lead) in accordance with J-STD-006 be considered for meeting the requirements of this specification.

6.14 Panel seals. It is recommended that silicone rubber be considered for meeting the requirements of this specification.

6.15 Environmentally preferable material. Environmentally preferable materials should be used to the maximum extent possible to meet the requirements of this specification. As of the dating of this document, the U.S. Environmental Protection Agency (EPA) is focusing efforts on reducing 31 priority chemicals. The list of chemicals and additional information is available on their website at http://www.epa.gov/osw/hazard/wastemin/priority.htm. Included in the EPA list of 31 priority chemicals are cadmium, lead, and mercury. Use of these materials should be minimized or eliminated unless needed to meet the requirements specified herein (see Section 3).

6.16 Tin whisker growth. The use of alloys with tin content greater than 97 percent, by mass, may exhibit tin whisker growth problems after manufacture. Tin whiskers may occur anytime from a day to years after manufacture and can develop under typical operating conditions, on products that use such materials. Conformal coatings applied over top of a whisker-prone surface will not prevent the formation of tin whiskers. Alloys of 3 percent lead, by mass, have shown to inhibit the growth of tin whiskers. For additional information on this matter, refer to ASTM-B545 (Standard Specification for Electrodeposited Coatings of Tin).

6.17 Changes from previous issue. The margins of this specification are marked with vertical lines to indicate where modifications from this amendment were made. This was done as a convenience only and the Government assumes no liability whatsoever for any inaccuracies in these notations. Bidders and contractors are cautioned to evaluate the requirements of this document based on the entire content irrespective of the marginal notations.

Downloaded from http://www.everyspec.com

INDUCTOR CALIBRATION PROCESS

A.1 SCOPE.

A.1.1 Scope. This appendix details the alternate method of selecting inductors to meet the inductive load test (4.7.28.2). This appendix is not a mandatory part of this specification. The information contained herein is intended for compliance.

A.2 INDUCTIVE LOAD, DC

A.2.1 Inductor Classification. Inductors shall be classified into the following two groups based on the nominal steady state current.

A.2.1.1 Group 1. Inductors for use with military switches with inductive ratings of up to 2 Amps will use an inductor that has been qualified per A.3.1

A.2.1.2 Group 2. Inductors for use with military switches with inductive ratings from 2 to 25 Amps will use an inductor that has been qualified per A.3.2

A.3 INDUCTOR CALIBRATION PROCESS

A.3.1 Group 1 - Inductive Load Ratings up to 2 Amps –

a. Qualifying inductors for use in testing switches rated up to 2 Amps will be placed into a test circuit where the nominal rise time is 11.035 ±2.18 milliseconds measured at 63.2% of steady state current, or 1 L/R time constant as shown in Response Curve Figure A-1

b. Due to the decreasing tolerance zone of energy storage below 2 Amps, the inductors for this group shall be qualified at 1 Amp. Once qualified with a rise time that falls within the limits specified, it is acceptable to use the inductor for any test state current up to 2 Amps.

A.3.1.1 Calibration Process.

a. Place an inductor, variable resistor, and switching device in series with a 28±0.5VDC power supply.

b. Select a resistance to achieve a circuit current of 1±0.1Amps.

c. Power shall be applied using a knife switch or other switching device where contact bounce shall be less than 1 millisecond.

d. Insure the power supply will not be limiting the current at or below the specified steady state current.

e. Apply power to the circuit by closing the switch.

f. Monitor current using an oscilloscope.

g. Verify the rise time is between 8.8 and 13.2 milliseconds and steady state current is 1±0.1Amps. See Response Curve Figure A-1.

Downloaded from http://www.everyspec.com

A.3.1.2 Inductive Load Testing.

a. Test switches in series with a qualified inductor.

b. If the rise time of the inductor falls within 8.8 and 13.2 milliseconds at 1 Amp, it is qualified to use for any test current up to 2 Amps.

c. Set the current by adjusting the variable resistance to achieve the desired steady state current. Do not alter the inductance. The power supply shall remain at 28 +/- 0.5VDC.

A.3.2 Group 2. Inductive Load Ratings From 2 to 25 Amps –

a. Qualifying inductors for use in testing switches rated from 2 to 25 Amps will be placed into a test circuit where the nominal rise time is 11.035 ±2.18 milliseconds measured at 63.2% of desired steady state current, or 1 L/R time constant. as shown in Response Curve Figure A-1.

A.3.2.1 Calibration Process.

a. Place an inductor, variable resistor, and switching device in series with a 28±0.5VDC power supply.

b. Select a nominal resistance to achieve the desired test current.

c. Select an inductor to achieve a rise time of 11.035 ±2.18 milliseconds measured at 63.2%, or 1 L/R of the desired steady state current.

d. Power shall be applied using a knife switch or other switching device where contact bounce shall be less than 1 millisecond.

e. Insure the power supply will not be limiting the current at or below the desired steady state current.

f. Apply power to the circuit by closing the switch.

g. Monitor current using an oscilloscope.

h. Verify the circuit has achieved the desired steady state current.

i. If the rise time of the inductor falls within 8.8 and 13.2 milliseconds, it is qualified to use for this test current. See Response Curve Figure A-1

k. Tests to be completed at different current levels require the qualification process be repeated in order to determine an acceptable inductor for the desired test current. A single inductor will not be capable of achieving the proper rise time requirement over the entire 2 to 25 Amp range.

A.3.2.2 Inductive Load Testing.

a. Test switches in series with a qualified inductor.

A.4 Inductor Temperature Rise. The temperature rise of the test inductors should be limited to 55°C in order to maintain stable test currents which will minimize changes to inductor resistance as temperature increases.

Downloaded from http://www.everyspec.com

A.5 FORMULAS

A.4.1 Stored Energy. Figure A-2 was derived from the following formulas.

a. V = IR (R @ 5A, 28V = 5.6Ω)

b. $(\text{Joules})\ \mathrm{W} = \frac{1}{2}\mathrm{LI}^2$

c. (Rise Time) τ = L/R

d. Stored Energy – Upper & (Proposed) Lower Limits

Upper Limit $(\text{Joules})\ \mathrm{W} = 0.185 * \mathrm{I}$

Lower Limit $(\text{Joules})\ \mathrm{W} = 0.124 * \mathrm{I}$

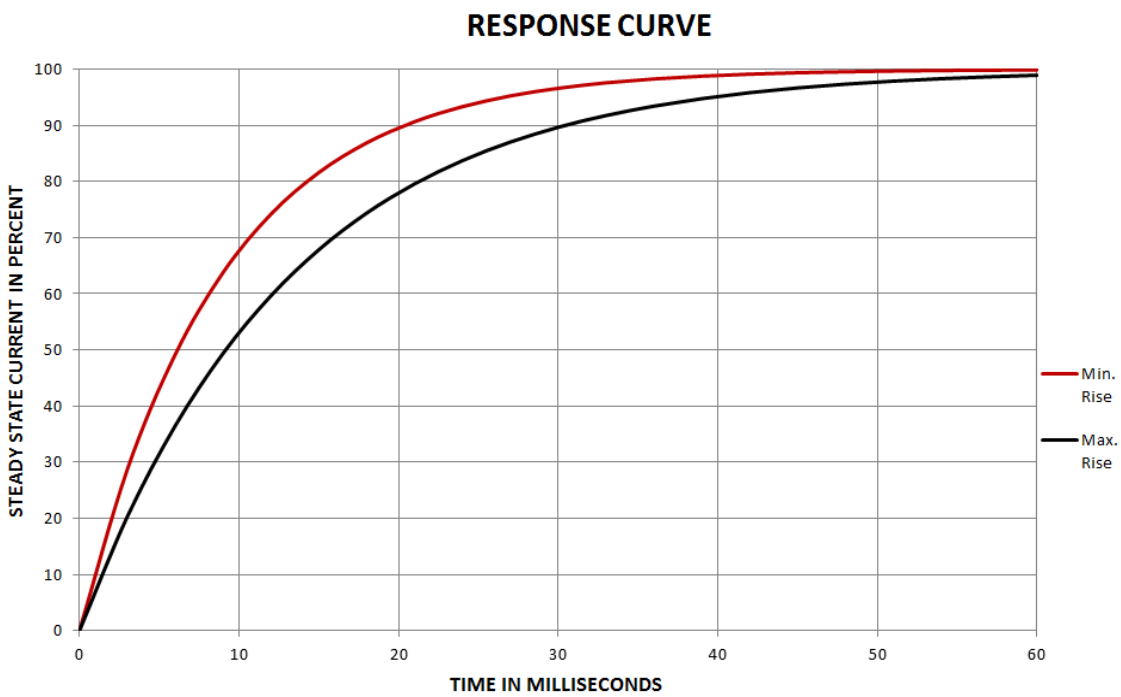

FIGURE A-1 - Response (Current Versus Time)

Downloaded from http://www.everyspec.com

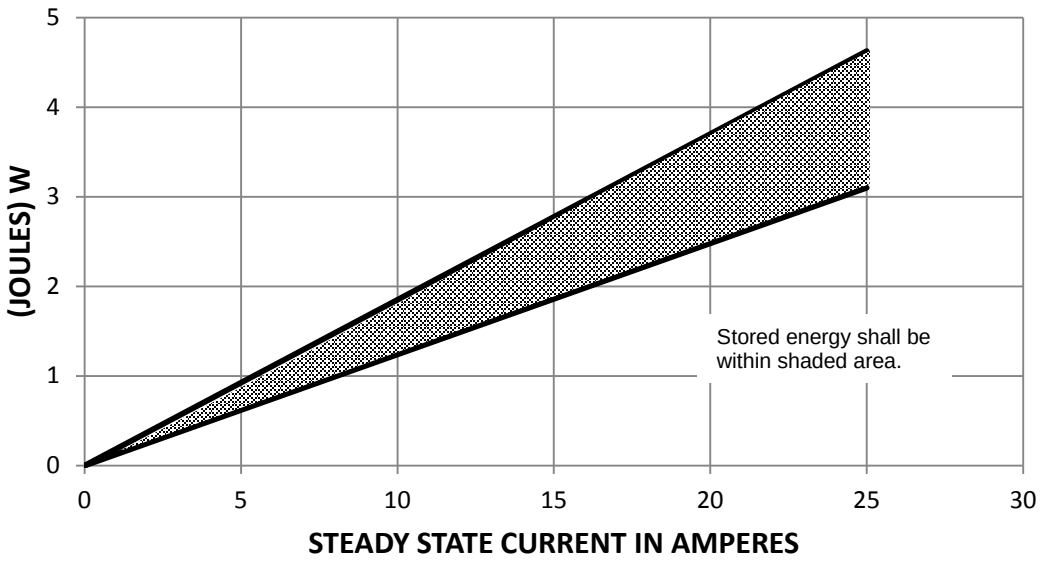

FIGURE A-2. Stored energy (joules versus current) type I inductors only.

Downloaded from http://www.everyspec.com

Custodians:
Army - CR
Navy - EC
Air Force - 85
DLA – CC

Review activities:
Army - AR, AV, MI
Navy - AS, MC, OS, SH
Air Force - 19, 99

Preparing activity:
DLA - CC

(Project 5930-2015-011)

NOTE: The activities listed above were interested in this document as of the date of this document. Since organizations and responsibilities can change, you should verify the currency of the information above using the ASSIST Online database at https://assist.dla.mil/.