NOTE: The document identifier and heading has been changed on this page to reflect that this is a performance specification. There are no other changes to this document. The document identifier on subsequent pages has not been changed, but will be changed the next time this document is revised.

MIL-PRF-17672D
23 January 1984
SUPERSEDING
MIL-H-17672C
3 April 1980
(See 6.6)

PERFORMANCE SPECIFICATION

HYDRAULIC FLUID, PETROLEUM, INHIBITED

This specification is approved for use by all Departments and Agencies of the Department of Defense.

1. SCOPE

1.1 Scope. This specification covers petroleum base hydraulic fluids containing anticorrosion and antioxidation additives for use in hydraulic systems and in other applications where a high grade lubricating oil having anticorrosion and antioxidation properties is required. This fluid should not be used in systems where a fire-resistant fluid is required.

1.2 Classification. Hydraulic fluids shall be of the following Military symbols, as specified (see 6.2):

Military symbol	NATO symbol	ISO viscosity grade
2075-T-H	-----	32
2110-T-H	H-573	46
2135-T-H	-----	68

2. APPLICABLE DOCUMENTS

2.1 Government documents.

2.1.1 Specifications and standards. Unless otherwise specified, the following specifications and standards of the issue listed in that issue of the Department of Defense Index of Specifications and Standards (DoDISS) specified in the solicitation form a part of this specification to the extent specified herein.

Beneficial comments (recommendations, additions, deletions) and any pertinent data which may be of use in improving this document should be addressed to: Commander, Naval Sea Systems Command, SEA 55Z3, Department of the Navy, Washington, DC 20362 by using the self-addressed Standardization Document Improvement Proposal (DD Form 1426) appearing at the end of this document or by letter.

FSC 9150

SPECIFICATIONS

FEDERAL

PPP-D-729 - Drums, Shipping and Storage, Steel, 55-Gallon (208 Liters).

PPP-P-420 - Plugs and Flanges (For Drum Closures).

STANDARDS

FEDERAL

FED-STD-313 - Material Safety Data Sheets, Preparation and the Submission of.

FED-STD-791 - Lubricants, Liquid Fuels, and Related Products; Methods of Testing.

MILITARY

MIL-STD-105 - Sampling Procedures and Tables for Inspection by Attributes.

MIL-STD-290 - Packaging of Petroleum and Related Products.

(Copies of specifications and standards required by contractors in connection with specific acquisition functions should be obtained from the contracting activity or as directed by the contracting officer.)

2.2 Other publications. The following documents form a part of this specification to the extent specified herein. The issues of the documents which are indicated as DoD adopted shall be the issue listed in the current DoDISS and the supplement thereto, if applicable.

ASTM

D 92 - Flash and Fire Points by Cleveland Open Cup. (DoD adopted)

D 95 - Water in Petroleum Products and Bituminous Materials by Distillation. (DoD adopted)

D 97 - Pour Point of Petroleum Oils. (DoD adopted)

D 129 - Sulfur in Petroleum Products (General Bomb Method). (DoD adopted)

D 130 - Detection of Copper Corrosion from Petroleum Products by the Copper Strip Tarnish Test. (DoD adopted)

D 189 - Conradson Carbon Residue of Petroleum Products. (DoD adopted)

D 270 - Sampling Petroleum and Petroleum Products. (DoD adopted)

D 287 - API Gravity of Crude Petroleum and Petroleum Products (Hydrometer Method). (DoD adopted)

D 341 - Vicosity - Temperature Charts for Liquid Petroleum Products. (DoD adopted)

D 445 - Kinematic Viscosity of Transparent and Opaque Liquids (and the Calculation of Dynamic Viscosity). (DoD adopted)

D 665 - Rust-Preventing Characteristics of Inhibited Mineral Oil in the Presence of Water. (DoD adopted)

D 874 - Sulfated Ash from Lubricating Oils and Additives. (DoD adopted)
D 892 - Foaming Characteristics of Lubricating Oils. (DoD adopted)
D 943 - Oxidation Characteristics of Inhibited Mineral Oils.
D 974 - Neutralization Number by Color-Indicator Titration. (DoD adopted)
D 1298 - Density, Relative Density (Specific Gravity) or API Gravity of Crude Petroleum and Liquid Petroleum Products by Hydrometer Method. (DoD adopted)
D 1401 - Emulsion Characteristics of Petroleum Oils and Synthetic Fluids.
D 1500 - ASTM Color of Petroleum Products (ASTM Color Scale). (DoD adopted)
D 1552 - Sulfur in Petroleum Products (High-Temperature Method). (DoD adopted)
D 2270 - Calculating Viscosity Index from Kinematic Viscosity at 40 and 100°C. (DoD adopted)
D 2272 - Oxidation Stability of Steam Turbine Oils by Rotating Bomb.
D 2622 - Sulfur in Petroleum Products (X-Ray Spectrographic Method). (DoD adopted)
F 313 - Insoluble Contamination of Hydraulic Fluids by Gravimetric Analysis.

(Application for copies should be addressed to the ASTM, 1916 Race Street, Philadelphia, PA 19103.)

(Industry association specifications and standards are generally available for reference from libraries. They are also distributed among technical groups and using Federal agencies.)

2.3 Order of precedence. In the event of a conflict between the text of this specification and the references cited herein, the text of this specification shall take precedence.

3. REQUIREMENTS

3.1 Qualification. The hydraulic fluid furnished under this specification shall be products which are qualified for listing on the applicable qualified products list at the time set for opening of bids (see 4.3 and 6.3).

3.2 Material. The fluid shall be a blend of virgin petroleum-base hydraulic fluid stocks plus additive agents to meet the requirements of this specification. Additive components as approved in the sample granted qualification approval shall not be changed without the approval of the qualifying activity.

3.3 Compatibility. The hydraulic fluid shall be compatible with reference fluid designated by the Government and meet all the requirements of this specification. The fluid shall be considered compatible if 1:1 mixtures of a test oil with all reference oils give passing values on the oxidation, corrosion (salt water), foam and emulsion tests in accordance with 4.6.

3.4 Homogeneity. Additive agents shall remain uniformly distributed throughout the fluid at all temperatures above the pour point and up to 135 degrees Celsius (°C) (275 degrees Fahrenheit (°F)) when tested as specified in 4.7. By visual inspection the hydraulic fluid shall not exhibit sedimentation or separation of insoluble materials.

3.5 Chemical and physical requirements. The fluid shall conform to the chemical and physical requirements as specified in table I.

TABLE I. Chemical and physical requirements and test methods.

Characteristics	Limit			Method no.	ASTM no.
	2075 T-H	2110 T-H	2135 T-H		
A.P.I. gravity degrees	Report[1/]	Report[1/]	Report[1/]		[2/] D 287, D 1298
Pour point, °C (°F) maximum	-29 (-20)	-23 (-10)	-18 (0)		D 97
Flash point, °C (°F) minimum	157 (315)	163 (325)	171 (340)		D 92, D 341
Viscosity, centistokes at 100°C (212°F)[3/]	Report[1/]	Report[1/]	Report[1/]		D 445
Viscosity, centistokes at 40°C (104°F)	28.8 - 35.2	41.4 - 50.6	61.2 - 74.8		
Viscosity, index, minimum	94	94	94		D 2270
Neutralization number, maximum	0.20	0.20	0.20		D 974
Neutrality, qualitative	Neutral	Neutral	Neutral	[4/] 5101	
Corrosion, copper strip at 100°C (212°F)	1 maximum	1 maximum	1 maximum		D 130
Rust preventative characteristics in the presence of water	Pass	Pass	Pass		D 665 procedure B[5/]
Water, percent	None	None	None		D 95
Ash, sulfated residue, percent maximum	Report[1/]	Report[1/]	Report[1/]		D 874
Valve sticking characteristics[6/]	Pass	Pass	Pass	See appendix B	

See footnotes at end of table.

TABLE I. Chemical and physical requirements and test methods. - Continued

Characteristics	Limit			Method no.	ASTM no.
	2075 T-H	2110 T-H	2135 T-H		
Foam characteristics:					
Tendency/stability	65	65	65		7/ D 892
Sequence 1, mL maximum	9/ 65/0	9/ 65/0	9/ 65/0		
Sequence 2, mL maximum	9/ 65/0	9/ 65/0	9/ 65/0		
Sequence 3, mL maximum	9/ 65/0	9/ 65/0	9/ 65/0		
Emulsion test, after 30 minutes settling time					D 1401
Oil layer, maximum	40 mL	40 mL	40 mL		
Water layer and lacy cuff, maximum	40 mL	40 mL	40 mL		
Lacy cuff, maximum	3 mL	3 mL	3 mL		
Oxidation test, time required in hours to reach neutralization value of 2.0 mg KOH	1000	1000	1000		
After 1000 hours:					D 943
Total sludge, mg maximum	100	100	100	See appendices A and C	
Total iron, mg maximum	100	100	100		
Total copper, mg maximum	100	100	100		
Oxidation by rotating bomb	Report 1/	Report 1/	Report 1/		D 2272

See footnotes at end of table.

TABLE I. Chemical and physical requirements and test methods. - Continued

Characteristics	Limit			Method no.	ASTM no.
	2075 T-H	2110 T-H	2135 T-H		
Contamination mg/ 100 mL maximum 8/	4.0	4.0	4.0		F 313
Color	Report 1/	Report 1/	Report 1/		D 1500
Sulfur	Report 1/	Report 1/	Report 1/		D 129, D 1552 or D 2622
Carbon residue	Report 1/	Report 1/	Report 1/		D 189

1/ Determination is made as a matter of product identification.
2/ ASTM D 1298 may used as an alternate method.
3/ The preferred test temperature is 100°C (212°F). However, until industrial metric conversion is complete, the test may be conducted at 98.9°C (210°F) and the result converted to an equivalent 100°C (212°F) value as specified in ASTM D 341.
4/ FED-STD-791.
5/ Prior to the test the oil shall be water washed as follows: 300 grams of the oil to be tested shall be stirred with 50 grams of water for 30 minutes at 90°C (194°F) using the breaker and stirrer as specified in method 401 of FED-STD-791. After 30 minutes stirring, the mixture shall be transferred to a separatory funnel and left to separate; then the water layer shall be drawn off and the oil submitted to the salt water corrosion test.
6/ If the three grades contain identical additive packages only one grade will be tested.
7/ Option A shall not be used.
8/ Filter pore size shall be 0.8 micrometer.
9/ A ring of bubbles around the edge of the graduate shall be considered complete collapse.

3.6 Lot acceptance requirements. Each fluid sample selected and tested as specified in 4.4 shall meet the requirements as specified in table I. The result of the oxidation by rotating bomb test shall not vary from that value contained in the qualification test report by more than 20 percent. The contractor also shall certify that there has been no change in additive components from those contained in the sample granted qualification except for changes approved as specified in 3.2.

3.7 Workmanship. The fluid shall be free from suspended matter, grit or other foreign matter and shall be uniform in appearance when examined visually through transmitted light.

3.8 Material safety data sheets. Material safety data sheets shall be prepared and submitted to the qualifying activity, (see 6.3) in accordance with FED-STD-313.

4. QUALITY ASSURANCE PROVISIONS

4.1 Responsibility for inspection. Unless otherwise specified in the contract or purchase order, the contractor is responsible for the performance of all inspection requirements as specified herein. Except as otherwise specified in the contract or purchase order, the contractor may use his own or any other facilities suitable for the performance of the inspection requirements specified herein, unless disapproved by the Government. The Government reserves the right to perform any of the inspections set forth in the specification where such inspections are deemed necessary to assure supplies and services conform to prescribed requirements.

4.2 Classification of inspection. The inspection requirements specified herein are classified as follows:

(a) Qualification inspection (see 4.3).
(b) Quality conformance inspection (see 4.4).

4.3 Qualification tests. Qualification inspection shall be conducted at a laboratory satisfactory to the Naval Sea Systems Command (NAVSEA). Qualification tests shall consist of the tests specified in table I, 4.6 and 4.7.

4.4 Quality conformance inspection. Quality conformance inspection shall be as specified in method 9601 of FED-STD-791. Lot determination shall be as provided in 4.4.1. Each sample selected specified in 4.4.2 shall be tested as specified in 4.5 and table I, except the hydraulic valve sticking characteristics test, 1000 hour oxidation test, and compatibility test will not be required.

4.4.1 Inspection lot.

4.4.1.1 Bulk lot. For the purpose of sampling, a bulk lot of hydraulic fluid shall consist of an indefinite quantity of a homogeneous mixture of hydraulic fluid offered for acceptance in a single, isolated storage container; or manufactured in a single plant run (not exceeding 24 hours), through the same processing equipment, with no change in the ingredient materials.

4.4.1.2 Packaged lot. For the purpose of sampling, a packaged lot of hydraulic fluid shall consist of an indefinite number of unit containers of identical size and type offered for acceptance and filled with a homogeneous mixture of hydraulic fluid from a single isolated container; or filled with a homogeneous mixture of hydraulic fluid manufactured in a single plant run (not exceeding 24 hours); through the same processing equipment, with no change in the ingredient materials.

4.4.1.3 Delivery lot. For the purpose of sampling, a delivery lot of hydraulic fluid shall consist of hydraulic fluid in a single shipment.

4.4.2 Sampling.

4.4.2.1 Sampling a storage tank. Unless otherwise specified (see 6.2), a representative sample of 5 gallons of hydraulic fluid shall be taken from each lot as specified in ASTM D 270.

4.4.2.2 Sampling during plant run. A representative sample shall be drawn at the hydraulic fluid discharge pipe where it enters the receiving vessel or vessels. At least four samples shall be taken at regular intervals during the entire period of loading or filling, each sample being 1 pint.

4.4.2.3 Sampling of filled containers.

4.4.2.3.1 Drums. Where the hydraulic fluid is contained in drums, samples shall be drawn from the number of drums as specified in ASTM D 270. The contents of each drum to be sampled shall be shaken, rolled and stirred to mix the contents thoroughly. Equal portions shall be withdrawn from approximately the center of each drum by means of a "thief" or other sampling device.

4.4.2.3.2 Five-gallon cans. Where the hydraulic fluid is contained in 5-gallon cans, samples shall be drawn from the containers as specified in ASTM D 270. When the lot contains less than five containers, each container shall be sampled.

4.4.3 Rejection of lots. When the sample of hydraulic fluid fails any of the tests, this shall be cause for rejection of the lot represented by the sample.

4.5 Examination of filled containers. A random sample of filled containers shall be selected from each lot as specified in MIL-STD-105 at inspection level I and acceptable quality level (AQL) of 2.5 percent defective to verify compliance with this specification regarding fill, closure, marking and other requirements not involving tests. Samples shall be examined for defects of the container and the closure, for evidence of leakage and for unsatisfactory markings as specified in MIL-STD-290; each sample filled container shall also be weighed to determine the amount of the contents. Any container in the sample having one or more defects or under required fill shall be cause for rejection of the container, and if the number of defective containers in any sample exceeds the acceptance number for the appropriate sampling plan as specified in MIL-STD-105, this shall be cause for rejection of the lot represented by the sample.

4.6 Compatibility. The fluid shall be considered compatible if 1:1 mixtures of a test fluid with all reference oils give passing values on the 1000 hour oxidation, corrosion (salt water), foam and emulsion tests when tested as specified in table I.

4.7 Homogeneity. After determining the pour point of the fluid, return test jar and fluid to cooling bath, cool to 12°C (53°F) below the pour point, and hold at that temperature for 3 hours. Remove test jar from cooling bath and allow to warm to room temperature. Next, place jar and fluid in heating bath, bring temperature of bath to 130 ± 2.8°C (266 ± 50°F) and hold at this temperature for 1 hour. Remove jar of fluid from the bath, allow to cool in air to room temperature. Test fluid shall be examined visually for sediment or separation of insoluble materials.

4.8 Inspection of packaging. Sample packages and packs, and the inspection of the preservation-packaging, packing and marking for shipment and storage shall be in accordance with the requirements of section 5 and the documents specified therein. The lot shall consist of items, packages or shipping containers as applicable. The unit of product shall be one item, one package or one shipping container as appropriate. Sampling shall be performed in accordance with MIL-STD-105, inspection level S-2 and acceptance quality level (AQL) of 4.0.

5. PACKAGING

(The preparation for delivery requirements specified herein apply only for direct Government acquisition.)

5.1 General requirements. Immediately before packaging, the hydraulic fluid shall be filtered to meet the requirements of this specification. Before filling, all containers shall be thoroughly cleaned and inspected to insure absolute absence of dirt, corrosion products, water or other materials which would contaminate or interfere with the successful operation of the fluid. Use of zinc containing materials in container areas which contact the hydraulic fluid is prohibited. This includes zinc plating or zinc phosphate coatings as specified in PPP-D-729 and PPP-P-420 as well as all other container specifications as specified in MIL-STD-290.

5.2 Packaging, packing and marking. The hydraulic fluid, in the quantity and container as specified (see 6.2), shall be packaged and packed according to level B or commercial as specified (see 6.2) and marked as specified in MIL-STD-290. Hydraulic fluid 2075 T-H, 2110 T-H and 2135 T-H shall be provided in 5-gallon can and 55-gallon drum sizes.

6. NOTES

6.1 Intended use. The hydraulic fluid covered by this specification is intended for use in shipboard hydraulic systems not requiring the use of a fire-resistant hydraulic fluid.

6.2 Ordering data. Acquisition documents should specify the following:

(a) Title, number and date of this specification.
(b) Symbol required (see 1.2).

(c) When representative sample of hydraulic fluid is different than specified (see 4.4.2).
(d) Type and size of the container required (see 5.2).
(e) Level of packaging and packing required (see 5.2).
(f) Quantity in gallons. The material should be purchased by volume, the unit being a U.S. gallon at 15.6°C (60°F).

6.3 With respect to products requiring qualification, awards will be made only for products which are, at the time set for opening of bids, qualified for inclusion in Qualified Products List QPL-17672 whether or not such products have actually been so listed by that date. The attention of the contractors is called to these requirements, and manufacturers are urged to arrange to have the products that they propose to offer to the Federal Government tested for qualification in order that they may be eligible to be awarded contracts or purchase orders for the products covered by this specification. The activity responsible for the Qualified Products List is the Naval Sea Systems Command, SEA 55Z3, Department of the Navy, Washington, DC 20362 and information pertaining to qualification of products may be obtained from that activity. Application for qualification tests shall be made in accordance with "Provisions Governing Qualification SD-6" (see 6.3.1).

6.3.1 Copies of "Provisions Governing Qualification SD-6" may be obtained upon application to Commanding Officer, Naval Publications and Forms Center, 5801 Tabor Avenue, Philadelphia, PA 19120.

6.4 The index of test methods of FED-STD-791 lists the corresponding equivalent test methods of the ASTM.

6.5 International interest. Certain provisions of this specification are the subject of international standardization agreement NATO-STANAG-1135. When amendment, revision or cancellation of this specification is proposed which will modify the international agreement concerned, the preparing activity will take appropriate reconciliation action through international standardization channels including departmental standardization offices to change the agreement or make other appropriate accommodations.

6.6 Changes from previous issue. Asterisks are not used in this revision to identify changes with respect to the previous issue, due to the extensiveness of the changes.

Custodians:
Army - GL
Navy - SH
Air Force - 20

Review activities:
Navy - AS
Air Force - 68
DLA - GS, PS

User activity:
Army - AT, ME

Preparing activity:
Navy - SH
(Project 9150-0693)

APPENDIX A

QUANTITY OF SLUDGE AND AMOUNTS OF COPPER AND IRON IN SLUDGE, OIL AND WATER AFTER 1000 HOURS

10. SCOPE

10.1 This appendix intends to outline the procedures designed to provide information on the quantity of sludge and the amounts of copper and iron in the sludge, oil and water after 1000 hours as specified in ASTM D 943.

10.2 Summary of the method. At the conclusion of the 1000 hour test, in addition to determining the neutralization value, the oil and water phases are examined for sludge, copper and iron. At present it is considered that any of the following shall be cause for rejection:

(a) A quantity of insoluble sludge in the oil and water layers plus that adhering to the catalyst coils or test tube greater than 100 milligrams (mg).
(b) Copper in excess of 100 mg in oil, water and sludge combined.
(c) Iron in excess of 100 mg in oil, water and sludge combined.

20. APPLICABLE DOCUMENTS

20.1 Other publications. The following document forms a part of this specification to the extent specified herein. The issues of the document which are indicated as DoD adopted shall be the issue listed in the current DoDISS and the supplement thereto, if applicable.

ASTM

D 91 - Precipitation Number of Lubricating Oils. (DoD adopted)

(Application for copies should be addressed to the ASTM, 1916 Race Street, Philadelphia, PA 19103.)

(Industry association specifications and standards are generally available for reference from libraries. They are also distributed among technical groups and using Federal agencies.)

30. PROCEDURES FOR SLUDGE

30.1 Apparatus. Filtration apparatus (two pieces) shall be easily disassembled so that filter paper can be removed for weighing. The apparatus shall consist of the following:

(a) Laboratory vacuum line (18-21 millimeters (mm) mercury).
(b) 5-micrometer porosity filter paper.
(c) Drying oven 79 ± 1°C (174 ± 2°F).
(d) Petri dish with cover or any suitable covered container for transporting filter membranes.
(e) Antistatic device.
(f) Eye dropper.
(g) Wash bottles for solvents.

30.2 Solvents. The solvents shall consist of the following:

(a) Distilled water (filter through 5 micrometer paper).
(b) Naphtha equal to ASTM naphtha as specified in ASTM D 91 (filter through 5 micron paper).

30.3 Determination of sludge.

30.3.1 Assemble chemically clean and dry filter apparatus using 5 micron paper which has been water-washed, naphtha-washed, dried at 79°C (174°F) and weighed to constant weight. (Deionize balance pan by exposing it to antistatic device before each weighing). Place paper in the filtration apparatus.

30.3.2 Remove catalyst coils from oxidation test cell while washing down into oil sample with naphtha. (This dilutes oil portion for better filtration). Filter entire test cell contents, oil, naphtha and water. (Filtrate is to be saved for further analysis.) Wash sludge on filter paper with several portions of naphtha to remove the oil. (This is determined by observing color of solvent after it passes through the filter paper.)

30.3.3 Transfer filtrate to separatory funnel and separate oil and water layers. Dilute oil portion to known volume with naphtha and dilute water portion to known volume with water so that aliquots can be used to measure copper and iron in oil and water layer (see 40.2 and 40.3). Remove upper portion of filtration apparatus and gently wash edges of paper containing sludge. Place paper in loosely covered Petri dish and dry at 79°C (174°F) until constant weight is obtained. Subtract weight of paper (see 30.3.1) and record result as the weight of insoluble sludge.

40. IRON AND COPPER CONTENT

40.1 Sludge. The entire sludge sample is ashed using the procedures as specified in ASTM D 874 (weighing and calculating ash content is not necessary). The ash is dissolved in 5 milliliters (mL) of hydrochloric acid (HCl). Heating on a hot plate may be required. Transfer the acid solution to a 50 mL volumetric flask, dilute to volume with distilled water, and retain for the atomic absorption determination of iron and copper as specified in appendix C.

40.2 Oil portion. Take an aliquot of the oil-naphtha solution as specified in 30.3.3. This aliquot can be retained and run in the atomic absorption as specified in appendix D if standard solutions of iron and copper in organic solvents are available. Otherwise, solvent is evaporated from the aliquot, the residue ashed and dissolved in water as specified in 40.1 for sludge. The water is then analyzed as specified in appendix C.

40.3 Water portion. Evaporate the entire water sample to dryness. Dissolve in 5 mL of HCl (using heat and cover glass if necessary) and dilute with distilled water to 50 mL in a volumetric flask. Analyze as specified in appendix C.

APPENDIX B

VALVE-STICKING CHARACTERISTICS

10. SCOPE

10.1 Scope. This appendix outlines a procedure to determine the valve-sticking tendency of candidate oils with shipboard hydraulic control valves.

10.2 Summary. The procedure consists of measuring the actuation force required to shift the spool of shipboard hydraulic control valves after 23 hours of static contact with candidate fluid when tested as specified herein.

20. APPLICABLE DOCUMENTS

20.1 Government documents.

20.1.1 Specifications. Unless otherwise specified, the following specifications of the issue listed in that issue of the Department of Defense Index of Specifications and Standards (DoDISS) specified in the solicitation forms a part of this specification to the extent specified herein.

SPECIFICATION

MILITARY

MIL-C-81302 - Cleaning Compound, Solvent, Trichlorotrifluoroethane.

(Copies of specifications and standards required by contractors in connection with specific acquistion functions should be obtained from the contracting activity or as directed by the contracting officer.)

30. MATERIALS AND APPARATUS

30.1 Apparatus. The test apparatus is shown schematically on figure 1. It consists of the following:

(a) Sump with 5 gallon capacity.
(b) Air operated piston pump capable of 1 liter per minute (L/min) capacity at 20.7 megapascals (MPa) (3,000 pounds per square inch (lb/in^2)).
(c) Accumulator bladder type, 6.5 liters (L) capacity.
(d) Flow control valves, eight, each 20.7 MPa (3,000 lb/in^2) rating.
(e) Test valves, one each Bendix models 3191350-1 and 3188561-4.
(f) Pressure control switch capable of maintaining 20.7 ± 1.7 MPa (3000 ± 250 lb/in^2).
(g) Pressure gage, 0-34.5 MPa (0-5000 lb/in^2).
(h) Enclosure capable of maintaining 38 ± 1°C (100 ± 1.8°F).

30.2 Materials. The materials shall consist of the following:

(a) Test oil (10 gallons) meeting cleanliness requirement as specified in table I.
(b) Solvent in accordance with MIL-C-81302.

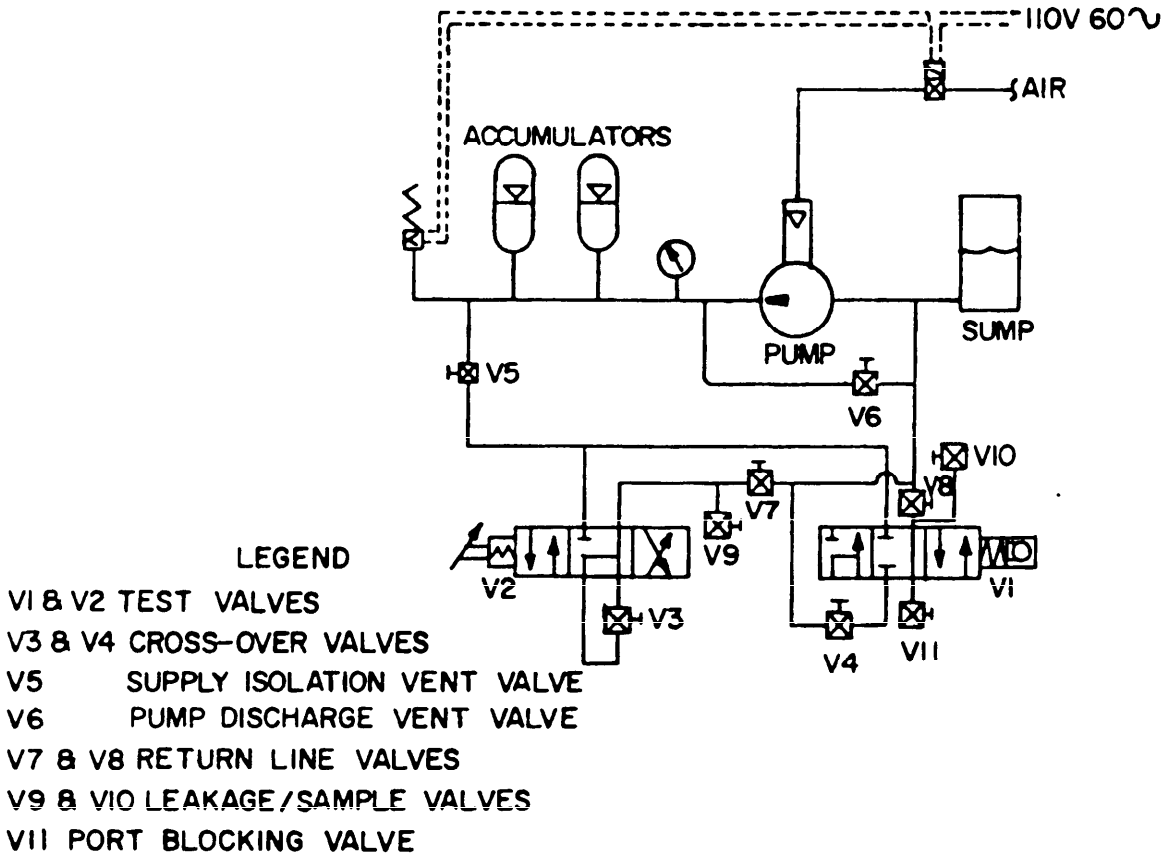

SH 11338

FIGURE 1. Hydraulic valve test loop.

40. TEST PROCEDURE

40.1 Test valve cleaning.

40.1.1 The pipe loop is disassembled at all take-down joints and the fluid allowed to drain. The test valves are disassembled, the spool and sleeve assemblies examined, cleaned by washing with precipitation naphtha as specified in MIL-C-81302, wiping with a chloroform-saturated lint-free tissue to remove any naphtha insolubles, and rinsing again with naphtha. Adequate ventilation and fire precautions are necessary. Following cleaning, the valves are assembled according to the manufacturer's specifications and the spool stroke is adjusted to proper stroke in each direction.

40.1.2 Sump cleaning. The sump is drained of oil and rinsed four times with solvent in accordance with MIL-C-81302 and air dried.

40.2 System flushing.

40.2.1 Following assembly of all system joints and installation of the test valves, 10 L of the test oil is placed in the sump. Close the supply valve, V5; open pump discharge vent valve, V6, to the sump. Start pump and purge air from accumulators and system lines. Secure pump.

40.2.2 Close valve V6 and open valves V3, V4, V5, V7 and V8. Test valve V1 has through flow (opened) only when it is shifted to one of its extreme positions. This is the same direction the valve is pulled while making the valve actuating force determinations. With test valve V1 in the open position and test valve V2 centered, start the pump. Adjust system pressure to 3.4 MPa (500 lb/in^2) pressure using valve V4. Cycle test valve V1 ten times. Test valve V2 has through flow (opened) when in either extreme position. With test valve V2 in one of its extreme positions and test valve V1 centered, the system pressure is adjusted to 3.4 MPa (500 lb/in^2), using valve V3. Cycle test valve V2 ten times. A valve cycle is described by starting at the center position, moving the spool to one extreme position, and reversing to the other extreme position, and reversing again to recenter the spool.

40.2.3 Center test valves V1 and V2, close valves V3 and V4, and charge accumulators to 10.3 MPa (1500 lb/in^2) with pump. Secure pump. Cycle test valve V1, dropping system pressure 1.4 MPa (200 lb/in^2) per cycle until 0 MPa (0 lb/in^2) is reached. Valve V4 is used to control the rate of pressure drop. Recharge accumulators and repeat for test valve V2, using valve V3 to control the rate of pressure drop. The same number of cycles are used for each test valve.

40.2.4 Repeat procedure as specified in 40.2.3 above except beginning with a system pressure of 20.7 MPa (3000 lb/in^2).

40.2.5 Close valve V5, start pump and charge system to 20.7 MPa (3000 lb/in^2), secure pump, and discharge fluid in accumulators through valve V6. Disassemble all system take-down joints and drain sump and system.

40.3 Test operation.

40.3.1 Assemble system joints and charge sump with 12 L of test oil.

40.3.2 Purge system of air as specified in 40.2.1 above.

40.3.3 Close valves V6, V7, V8 and V11, and open valves V3, V4, V5, V9 and V10. Start pump and slowly cycle each test valve (V1 and V2) three times to purge air from the system. Secure pump, close valves V9 and V10 and open valves V7 and V8.

40.3.4 Repeat 40.2.2, except cycle test valves V1 and V2 five times, maintaining system pressure at 3.4 MPa (500 lb/in^2). Secure pump and reduce pressure to 0 MPa (0 lb/in^2) through valve V6.

40.3.5 Measure each test valve actuation force at 0 MPa (0 lb/in^2), returning spool to the center position each time. Repeat for each test valve until three consecutive measurements are within a 0.02 kilogram (kg) (0.5 pounds) range which does not exceed 4.5 kg (10 pounds).

40.3.6 Center test valves V1 and V2, close valves V3, V4, V7 and V8, and open valves V9 and V10. Start pump and charge accumulators to 20.7 MPa (3000 lb/in^2).

40.3.7 Repeat procedure as specified in 40.3.5 at 20.7 MPa (3000 lb/in^2).

40.3.8 Center test valve spools, bring the system to test temperature of 38 ± 1°C (100 ± 1.8°F), and allow valves to remain at these conditions undisturbed for 23 hours. Measure valve fluid leakage rates during the first 2 hours and at end of the 23 hour period.

40.3.9 After the 23 hour period, measure actuation force for each test valve (V1 and V2) by pulling on valve spool. Complete valve cycle to return the spool to center position.

40.3.10 Close valves V9 and V10, open valves V7 and V8, and secure pump. Using valve V4 to control rate of pressure drop through test valve V1 and valve V3 to control rate of pressure drop through V2, reduce system pressure to 0 MPa (0 lb/in^2) by alternately cycling each test valve (V1 and V2) three times, and allowing a 2.8 MPa (400 lb/in^2) pressure drop for each cycle. Open valve V6.

40.3.11 Measure actuation force for each test valve at 0 MPa (0 lb/in^2).

40.3.12 Repeat steps as specified in 40.3.4 through 40.3.11 two times, except in 40.3.4 each valve will by cycled ten times at 3.4 MPa (500 lb/in^2) in lieu of five times.

50. RATING

50.1 A pass rating is given to a candidate oil when the initial actuation force after the 23-hour aging for each test valve (see 40.3.9) averages 9 kg (20 pounds) or below with no individual initial actuation force exceeding 11 kg (25 pounds).

APPENDIX C

WATER SOLUBLE COPPER AND IRON IN THE ASHED SLUDGE, OIL, AND WATER OBTAINED FROM TURBINE OIL OXIDATION TESTING (ATOMIC ABSORPTION METHOD)

10. SCOPE

10.1 Scope. This method is intended for the determination using an atomic absorption technique of the soluble copper and iron contained in the ashed sludge, oil and water following completion as specified in ASTM D 943.

10.2 Summary of method. Aqueous solutions of the ashed sludge, ashed oil and the water as specified in ASTM D 943 procedure are aspirated into the flame of an atomic absorption spectrophotometer. The absorbances of the sample at the copper and iron wavelengths are compared with those of standard solutions whose copper and iron contents bracket those of the sample. Concentrations in the sample are then calculated by interpolation.

20. APPLICABLE DOCUMENTS

20.1 Other publications. The following document forms a part of this specification to the extent specified herein. The issues of the document which are indicated as DoD adopted shall be the issue listed in the current DoDISS and the supplement thereto, if applicable.

AMERICAN CHEMICAL SOCIETY (ACS)

Specifications - Reagent Chemicals

(Application for copies should be addressed to Applied Publications, American Chemical Society, 1155 16th Street, NW, Washington, DC 20036.)

(Industry association specifications and standards are generally available for reference from libraries. They are also distributed among technical groups and by using Federal agencies.)

30. APPARATUS

30.1 Atomic absorption spectrophotometer. The atomic absorption spectrophotometer shall operate with the following parameters:

(a) Wavelength. 3247 Angstroms (Å) for copper; 2483 Å for iron.
(b) Source. Hollow cathode lamps for copper and iron.
(c) Fuel. Acetylene (oxidizing flame).
(d) Oxidizer. Air.

30.2 Hypodermic syringes. Hypodermic syringes shall have 5 and 10 mL capacity.

30.3 Volumetric flasks. Volumetric flasks shall have 25, 50, and 100 mL capacity.

40. REAGENTS AND MATERIALS

40.1 Purity of reagents. Reagent grade chemicals shall be used in all tests. Unless otherwise specified, it is intended that all reagents shall conform to the specifications of the Committee on Analytical Reagents of the American Chemical Society, where such specifications are available. Other grades may be used, provided it is first ascertained that the reagent is of sufficiently high purity to permit its use without lessening the accuracy of the determination.

40.2 Purity of water. Unless otherwise specified, references to water shall be understood to mean distilled water or water of equal purity.

40.3 Stock copper solution. Dissolve copper nitrate in water in amounts to give a copper concentration of 1000 microgram/mL. The water should contain enough nitric acid (HNO_3) to make the solution slightly acid.

40.4 Copper standard. Dilute the stock copper solution 5 to 100 with water. This will give a copper concentration of 50 microgram/mL. This solution should be made daily as needed.

40.5 Copper working standard. Dilute the copper standard with water to obtain solutions containing 0, 10, 20, 30 and 40 microgram/mL copper.

40.6 Stock iron solution. Dissolve iron powder of known purity in dilute HCl and dilute with water to obtain an iron concentration of 1000 microgram/mL.

40.7 Iron standard. Dilute the stock iron solution 5 to 100 with water. This will give an iron concentration of 50 microgram/mL. This solution should be made daily as needed.

40.8 Iron working standards. Dilute the iron standard with water to obtain solutions containing 0, 10, 20, 30 and 40 microgram/mL iron.

50. PROCEDURE

50.1 Using the appropriate light source, aspirate the 0.0 microgram/mL copper standard and adjust the instrument to give zero absorbance. Aspirate the sample and record absorbance. Aspirate two copper working standard selected to give absorbances higher and lower than that of the sample. Repeat the aspiration of standards and sample several times to average out absorbance variations. Record and average the absorbances obtained for the sample and standards.

50.2 Repeat in accordance with 50.1 using the light source and working standards appropriate for the determination of iron.

60. CALCULATION

60.1 Calculate the concentration of copper in the sample as follows:

$$\text{Copper, microgram/mL} = L + \frac{(A_s - A_l)}{(A_u - A_l)} (U-L)$$

Where:

L = concentration of lower working standard, microgram/mL

U = concentration of upper working standard, microgram/mL

A_l = absorbance of lower working standard

A_u = absorbance or upper working standard

A_s = absorbance of sample

60.2 Calculate the concentration of iron in the sample as specified in 60.1, substituting the absorbance values obtained with the iron source and working standards.

60.3 Convert concentrations of copper and iron obtained as specified in 60.1 and 60.2 to total copper and iron content of the sample by multiplying the concentrations by the total volume of the sample.

APPENDIX D

ALTERNATE METHOD FOR COPPER AND IRON IN TURBINE OIL BY ATOMIC ABSORPTION

10. SCOPE

10.1 Scope. This method is intended for the determination, using an atomic absorption technique, of copper and iron in filtered turbine oil following its testing as specified in ASTM D 943. Sensitivity of the method (for 1 percent absorption) is about 0.15 microgram/mL for each metal.

10.2 Summary of method. An aliquot of the filtered turbine oil is diluted with xylene and aspirated into the flame of an atomic absorption spectrophotometer, sequentially using appropriate hollow cathode lamp sources for copper and iron. Concentrations of copper and iron are determined by the method of standard additions of a series of known amounts of the metals to the sample and the plotting of response versus amounts added. Extrapolation of the plot back to zero response then gives a measure of the materials originally present before the additions.

20. APPLICABLE DOCUMENTS

20.1 Other publications. The following document forms a part of this specification to the extent specified herein. The issues of the document which are indicated as DoD adopted shall be the issue listed in the current DoDISS and the supplement thereto, if applicable.

AMERICAN CHEMICAL SOCIETY (ACS)

Specifications - Reagent Chemicals

(Application for copies should be addressed to Applied Publications, American Chemical Society, 1155 16th Street, NW, Washington, DC 20036.)

(Industry association specifications and standards are generally available for reference from libraries. They are also distributed among technical groups and by using Federal agencies.)

30. APPARATUS

30.1 Atomic absorption spectrophotometer. The atomic absorption spectrophotometer shall operate with the following parameters:

(a) Wavelength. 3247 Angstroms (Å) for copper; 2483 Å for iron.
(b) Source. Hollow cathode lamps for copper and iron.
(c) Fuel. Acetylene (oxidizing flame).
(d) Oxidizer. Air.

30.2 Hypodermic syringes. Hypodermic syringes shall have 5 and 10 mL capacity.

30.3 Volumetric flasks. Volumetric flasks shall have 25, 50, and 100 mL capacity.

40. REAGENTS AND MATERIALS

40.1 Purity of reagents. Reagent grade chemicals shall be used in all tests. Unless otherwise specified, it is intended that all reagents shall conform to the specifications of the Committee on Analytical Reagents of the American Chemical Society, where such specifications are available. Other grades may be used, provided it is first ascertained that the reagent is of sufficiently high purity to permit its use without lessening the accuracy of the determination.

40.2 Purity of water. Unless otherwise specified, references to water shall be understood to mean distilled water or water of equal purity.

40.3 Stock copper solution. Transfer approximately 0.5 grams of NBS Standard 1056, copper cyclohexanebutyrate, to a small beaker and dry over fresh phosphorus pentoxide (P_2O_5) in a desiccator for 2 hours. Quickly and accurately transfer 0.313 grams (equivalent to 50 mg of copper) of the dried salt to a weighed 200 mL Erlenmeyer flask. Add 2 mL of xylene and 4 mL of 2 ethyl hexylamine; and, while swirling and without charring, heat the flask on a hot plate until a clear solution is obtained. Add 2 mL of 2 ethylhexanoic acid. Add 80 to 90 mL of white mineral oil of the approximately same viscosity of the oil to be tested to the hot solution and gently shake the flask to mix the contents. Allow the flask to cool to room temperature and add enough oil to bring the total weight of the flask contents to 100 ± 0.5 grams. Stopper the flask and gently shake to ensure a homogeneous solution. The concentration of copper in this solution is 500 microgram/gram. Alternatively, prepared metal-organo standards may be purchased and diluted with white oil to obtain the desired 500 microgram/mL concentrations as specified in 40.1 and 40.5.

40.4 Copper standard. Dilute the stock copper solution 1:10 with xylene. This will give a nominal copper concentration of 50 microgram/mL.

40.5 Stock iron solution. Transfer approximately 0.6 grams of NBS Standard 1079B, tris (1, phenyl-1, 3-butanediono) iron, to a small beaker and dry over fresh P_2O_5 in a desiccator for 2 hours. Quickly and accurately transfer 0.478 grams of this salt to a tared 200 mL Erlenmeyer flask. Add 3 mL of xylene and 4 mL of 2 ethylhexanoic acid and heat the flask on a hot plate, while swirling and without charring, until the compound dissolves. Add to the hot solution 80 to 90 mL of white mineral oil of the approximately same viscosity of the oil to be tested and gently shake the flask to mix the contents. Allow the flask to cool to room temperature and add enough oil to bring the total weight of the contents of the flask to 100 ± 0.5 grams. Stopper the flask and shake gently to ensure a homogeneous solution. The concentration of iron in this solution is 500 microgram/gram.

40.6 Iron standard. Dilute the stock iron solution 1:10 with xylene. This will give a nominal iron concentration of 50 microgram/mL.

50. PROCEDURE

50.1 Determine the total volume of filtered turbine oil, either by actual measurement or by dilution with naphtha to a known volume.

50.2 Using a 5 mL syringe without needle, put 5 mL aliquots of the turbine oil into five 25 mL volumetric flasks. To the series of flasks, add 0.00, 0.25, 0.50, 1.0, and 1.5 mL of the nominally 50 microgram/mL copper standard solution. To the same series of flasks and in the same order, add 0.00, 0.25, 0.50, 1.0 and 1.5 mL of the nominally 50 microgram/mL iron standard solution. Dilute each to 25 mL with xylene. This procedure results in a five times dilution of the turbine oil with 0.0, 0.5, 1.0, 2.0 and 3.0 microgram/mL of added copper and iron.

50.3 Burn xylene for 2 minutes in the spectrophotometer. Aspirate each sample for 1.5 minutes at each wavelength and record signal while aspirating. Burn xylene for 1.5 minutes between each sample.

50.4 For each metal, plot sample signal as the ordinate versus the corresponding standard metal added, in microgram/mL as the abscissa. Draw the best fit straight line through the points and extend it to pass through the abscissa. The distance of this intercept from the ordinate is equivalent to the concentration of the metal whose signal has been plotted. Plot the data for each metal in this fashion.

50.5 Multiply the concentrations of copper and iron as specified in 50.4 by 5 to obtain their concentrations in the filtered oil.

60. CALCULATION

60.1 Calculate the total copper and iron content of the turbine oil, in mg, as follows:

(a) Total copper, mg = AC/1000
(b) Total iron, mg = BC/1000

Where:

A = concentration of copper in the filtered oil, microgram/mL
B = concentraton of iron in the filtered oil, microgram/mL
C = total volume of filtered turbine oil.

U.S. GOVERNMENT PRINTING OFFICE 1984 — 705-040/A1239

(Fold along this line)

DEPARTMENT OF THE NAVY

COMMANDER
NAVAL SEA SYSTEMS COMMAND (SEA 5523)
DEPARTMENT OF THE NAVY
WASHINGTON, DC 20362

NO POSTAGE NECESSARY IF MAILED IN THE UNITED STATES

OFFICIAL BUSINESS
PENALTY FOR PRIVATE USE $300

BUSINESS REPLY MAIL
FIRST CLASS PERMIT NO. 12503 WASHINGTON D C

POSTAGE WILL BE PAID BY THE DEPARTMENT OF THE NAVY

COMMANDER
NAVAL SEA SYSTEMS COMMAND (SEA 5523)
DEPARTMENT OF THE NAVY
WASHINGTON, DC 20362

INSTRUCTIONS: In a continuing effort to make our standardization documents better, the DoD provides this form for use in submitting comments and suggestions for improvements. All users of military standardization documents are invited to provide suggestions. This form may be detached, folded along the lines indicated, taped along the loose edge *(DO NOT STAPLE)*, and mailed. In block 5, be as specific as possible about particular problem areas such as wording which required interpretation, was too rigid, restrictive, loose, ambiguous, or was incompatible, and give proposed wording changes which would alleviate the problems. Enter in block 6 any remarks not related to a specific paragraph of the document. If block 7 is filled out, an acknowledgement will be mailed to you within 30 days to let you know that your comments were received and are being considered.

NOTE: This form may not be used to request copies of documents, nor to request waivers, deviations, or clarification of specification requirements on current contracts. Comments submitted on this form do not constitute or imply authorization to waive any portion of the referenced document*(s)* or to amend contractual requirements.

(Fold along this line)

(TO DETACH THIS FORM, CUT ALONG THIS LINE.)

STANDARDIZATION DOCUMENT IMPROVEMENT PROPOSAL

(See Instructions – Reverse Side)

1. DOCUMENT NUMBER	2. DOCUMENT TITLE
MIL-H-17672D	HYDRAULIC FLUID, PETROLEUM, INHIBITED

3a. NAME OF SUBMITTING ORGANIZATION	4. TYPE OF ORGANIZATION *(Mark one)*
b. ADDRESS *(Street, City, State, ZIP Code)*	☐ VENDOR ☐ USER ☐ MANUFACTURER ☐ OTHER *(Specify)*:

5. PROBLEM AREAS

a. Paragraph Number and Wording:

b. Recommended Wording:

c. Reason/Rationale for Recommendation:

6. REMARKS

7a. NAME OF SUBMITTER *(Last, First, MI)* – Optional	b. WORK TELEPHONE NUMBER *(Include Area Code)* – Optional
c. MAILING ADDRESS *(Street, City, State, ZIP Code)* – Optional	8. DATE OF SUBMISSION *(YYMMDD)*

DD FORM 82 MAR 1426

PREVIOUS EDITION IS OBSOLETE.