Downloaded from http://www.everyspec.com

INCH-POUND

MIL-PRF-6106M
14 September 2009
SUPERSEDING
MIL-PRF-6106L
10 November 2000

PERFORMANCE SPECIFICATION

RELAYS, ELECTROMAGNETIC
GENERAL SPECIFICATION FOR

This specification is approved for use by all Departments
and Agencies of the Department of Defense.

1. SCOPE

1.1 Scope. This specification establishes general requirements for electromechanical relays with contact ratings from 25 amperes resistive (unless otherwise specified) and upward for use in electrical applications. Auxiliary contacts may be rated at lower currents. Relays covered by this specification are capable of meeting the electrical and environmental requirements when mounted directly to the structure of aircraft, missile, spacecraft, ship, and other primary vehicles or in ground support and shipboard equipment. Other ratings may be as specified (see 3.1). CAUTION: The use of any coil voltage less than the rated coil voltage will compromise the operation of the relay. For additional application and caution information, see 6.1.

1.2 Classification. Relays covered by this specification will be classified by the type specified in 1.2.1 (see 3.1 and 6.1).

1.2.1 Type designators. The type is identified by one of the following designators:

Type I: Continuous duty, hermetically sealed.
Type II: Continuous duty, unsealed.
Type III: Intermittent duty (hermetically sealed, environmentally sealed, unsealed).
Type IV: Continuous duty, environmentally sealed, (nonhermetic).

1.2.2 Class "O" relays. Information concerning Class "O" relays is covered in 6.11.

1.2.3 Part or Identifying Number (PIN). The PIN will consist of the letter "M"; the basic specification number; the specification sheet number; and an assigned dash number (see 3.1) as shown in the following example. (NOTE: The PIN format for relays covered by Military Standards (MS) sheets and Air Force-Navy (AN) Aeronautical standards are to be as specified therein; see 3.1.)

M6106	/20	-001
Specification designator	Specification sheet number	Dash number

Comments, suggestions or questions on this document should be addressed to Defense Supply Center Columbus, ATTN: VAT, Post Office Box 3990, Columbus, OH 43218-3990, or emailed to relay@dla.mil. Since contact information can change, you may want to verify the currency of this address information using the ASSIST Online database at http://assist.daps.dla.mil.

Downloaded from http://www.everyspec.com

2. APPLICABLE DOCUMENTS

2.1 General. The documents listed in this section are specified in sections 3 and 4 of this specification. This section does not include documents cited in other sections of this specification or recommended for additional information or as examples. While every effort has been made to ensure the completeness of this list, document users are cautioned that they must meet all specified requirements of documents cited in sections 3 and 4 of this specification, whether or not they are listed.

2.2 Government documents.

2.2.1 Specifications, standards, and handbooks. The following specifications, standards, and handbooks form a part of this document to the extent specified herein. Unless otherwise specified, the issues of these documents are those cited in the solicitation or contract.

DEPARTMENT OF DEFENSE SPECIFICATIONS

MIL-PRF-6106/12	-	Relay, Electromagnetic, (Type I), Magnetic Latch, 25 Amperes, 3PNO Main Contacts, with 2 Ampere, 1PDT Auxillary Contacts, Hermetically Sealed.
MIL-PRF-6106/13	-	Relay, Electromagnetic, 25 Amperes, 3PST, NO, with 2 Ampere, 1 PDT Auxiliary Contacts, Hermetically Sealed, Permanent Magnet Drive, Type I.
MIL-PRF-6106/19	-	Relay, Electromagnetic, Magnetic Latch, 25 Amperes, SPDT, Hermetically Sealed.
MIL-PRF-6106/20	-	Relay, Electromagnetic, Magnetic Latch, 25 Amperes, SPDT, Hermetically Sealed.
MIL-PRF-6106/38	-	Relay, Electromagnetic, Type I, Magnetic Latch, Permanent Magnet Drive, Low Level to 5 Amperes, 2 PDT, Hermetically Sealed.
MIL-PRF-6106/39	-	Relay, Electromagnetic, Type I Magnetic Latch, Permanent Magnet Drive, Low Level to 5 Amperes, 4 PDT, Hermetically Sealed.
MIL-PRF-6106/40	-	Relay, Electromagnetic, Type I, Magnetic Latch, Permanent Magnet Drive, Low Level to 10 Amperes, 3 PDT, Hermetically Sealed.

(See supplement 1 for list of other specification sheets.)

FEDERAL STANDARDS

FED-STD-H28	-	Screw Thread Standards for Federal Services.

DEPARTMENT OF DEFENSE STANDARDS

MIL-STD-202	-	Electronic and Electrical Component Parts.
MIL-STD-750	-	Semiconductor Devices, Test Methods for.
MIL-STD-790	-	Established Reliability and High Reliability Qualified Products List (QPL) Systems for Electrical, Electronic, and Fiber Optic Parts Specifications.
MIL-STD-883	-	Microelectronics.
MIL-STD-1276	-	Leads for Electronic Component Parts.
MIL-STD-1285	-	Marking of Electrical and Electronic Parts.
MS27742(USAF)	-	Relays, Electromagnetic, Type I, Magnetic Latch, 25 Amperes, 3 PDT, All Welded, Hermetically Sealed.

(Copies of these documents are available online at http://assist.daps.dla.mil/ or from the Standardization Document Order Desk, 700 Robbins Avenue, Building 4D, Philadelphia, PA 19111-5094.)

2.3 Non-Government publications. The following documents form a part of this document to the extent specified herein. Unless otherwise specified, the issues of these documents are those cited in the solicitation or contract.

AMERICAN NATIONAL STANDARDS INSTITUTE (ANSI)

ANSI Y32.2	-	Electrical and Electronics Diagrams.

Downloaded from http://www.everyspec.com

(Applications for copies are available online at http://www.ansi.org or should be addressed to American National Standards Institute (ANSI), 11 West 42nd Street, New York, NY 10036-8002.)

AMERICAN SOCIETY FOR TESTING AND MATERIALS (ASTM)

ASTM D470 - Crosslinked Insulations and Jackets for Wire and Cable.

(Application for copies are available online at http://www.astm.org or should be addressed to ASTM International PO Box C700, 100 Barr Harbor Drive, West Conshohocken, PA 19428-2959.)

ELECTRONIC INDUSTRIES ASSOCIATION (EIA)

EIA-557 - Statistical Process Control Systems.

(Applications for copies are available online at http://www.eia.org/ or should be addressed to the ECA/EIA Standards and Technology, 2500 Wilson Boulevard, Arlington, VA 22201-3834).

SOCIETY OF AUTOMOTIVE ENGINEERS (SAE International)

SAE-AS20659 - Terminal Lug, Crimp Style, Copper, Uninsulated, Ring-Tongue, Type I, Class 1, for 175°C Total Conductor Temperature.
SAE-AS25036 - Terminal Lug, Crimp Style, Copper, Insulated, Ring-Tongue, Bell-mouthed, Type II, Class 1 (for 105°C Total Conductor Temperature).

(Applications for copies are available online at http://www.sae.org/ or should be addressed to SAE International, 400 Commonwealth Drive, Warrendale, PA 15096-0001.)

2.4 Order of precedence. Unless otherwise noted herein or in the contract, in the event of a conflict between the text of this document and the references cited herein (except for related specification sheets), the text of this document takes precedence. Nothing in this document, however, supersedes applicable laws and regulations unless a specific exemption has been obtained.

3. REQUIREMENTS

3.1 Specification sheets. The individual item requirements shall be as specified herein and in accordance with the applicable specification sheet. In the event of any conflict between the requirements of this specification and the specification sheet, the latter shall govern.

3.2 Qualification. The relays furnished under this specification shall be a product which has been tested, and has passed the qualification inspection specified herein, and has been listed on or approved for listing on the applicable Qualified Products List (QPL).

3.2.1 Qualification and maintenance by similarity. Relays furnished under this specification may be qualified and maintained by similarity with other relays in the generic family. Manufacturer's which desire to qualify and maintain products in this same manner shall request this method from the qualifying activity. The manufacturer shall submit their test plans for the qualifying activity to evaluate. The following are example of items to be included in the request, but are not inclusive.

a. Difference between relays.

b. Tests for each relay.

c. Characteristics of each relay such as:

Contact assembly	Coil assembly	External material
Contact material	Coil wire size	Case material
Contact size	Coil bobbin	Plating
Contact configuration	Ampere turns	Welding process

Downloaded from http://www.everyspec.com

d. Any other items that may be affected by the differences in design.

3.3 QPL system. The manufacturer shall establish and maintain a QPL system for parts covered by this specification. Requirements for this system are specified in MIL-STD-790. In addition, the manufacturer shall also establish a Statistical Process Control (SPC) system that meets the requirements in 3.3.1. "Inactive for New Design" specification sheets, MS sheets, or AN standards are not required to be compliant with MIL-STD-790.

3.3.1 SPC. The contractor shall implement and use SPC techniques in the manufacturing process for parts covered in this specification. The SPC program shall be developed and maintained in accordance with EIA-557 or an equivalent system as approved by the qualifying activity. The SPC program shall be documented and maintained as part of the overall product assurance program as specified in MIL-STD-790. Inactive for New Design" specification sheets, MS sheets, or AN standards do not require the implementation and use of a SPC program.

3.4 Materials. Materials used externally shall be fungus inert (see 6.12), self-extinguishing, and shall not support combustion, nor give off noxious gases in harmful quantities. Materials used internally shall not give off gases in quantities sufficient to cause explosion of sealed enclosures, cause contamination of the contacts or other parts of the relay that will adversely affect life or reliability, or form current-carrying tracks when subjected to any of the tests specified herein. The use of silicone or silicone compounds internally for any purpose is prohibited. The use of silicone elastomers internally for relays fully rated 25 amperes and above is acceptable. The selection of materials shall be such as to provide maximum shelf life. Acceptance or approval of any constituent material shall not be construed as a guaranty of the acceptance of the finished product.

3.4.1 Metals. Metals shall be of a corrosion-resistant type or shall be plated or treated to resist corrosion. The use of mercury or mercury compounds is prohibited. The use of magnesium or magnesium alloys is prohibited (not applicable to contact systems).

3.4.1.1 Plated finishes.

a. Pure tin plating is prohibited internally and externally. Tin-lead finish is acceptable, provided that the minimum lead content is 3 percent. Other tin alloys are acceptable as approved by the qualifying activity.

b. Pure zinc plating is prohibited internally and externally.

c. Pure cadmium plating is prohibited internally and externally.

3.4.1.2 Dissimilar metals. When dissimilar metals are used in intimate contact with each other, protection against electrolysis and corrosion shall be provided. The use of dissimilar metals in contact, which tends toward active electrolytic corrosion (particularly brass, copper, or steel used in contact with aluminum or aluminum alloy), is not acceptable. However, metal spraying or metal plating of dissimilar base metals to provide similar or suitable abutting surfaces is permitted. Dissimilar metals should be as defined in 6.6. In hermetic seals, the 0.25 volt difference between the header material and the housing material is not applicable.

3.4.2 Magnet wire. Magnet wire shall be of such quality as to ensure that the relay meets all the performance requirements of this specification.

3.4.3 Plastic. Plastic shall be of such quality as to ensure that the relay meets all the performance requirements of this specification

3.4.4 Ceramic. Ceramic shall be of such quality as to ensure that the relay meets all the performance requirements of this specification.

3.5 Interface and construction. Relays shall meet the interface and construction requirements specified in 3.1 (such as weight or physical dimensions).

3.5.1 Attitude. Relays shall be constructed so as to ensure their proper operation when mounted in any position.

3.5.2 Mounting brackets. When mounting brackets are used, they shall be an integral part of the relay housing or

Downloaded from http://www.everyspec.com

shall be securely attached thereto in a manner to prevent any movement between the relay and the mounting bracket in service use.

3.5.3 Enclosures. Enclosures shall be of sufficient mechanical strength to withstand the normal abuse incurred in handling, transit, storage, and installation without causing malfunction or distortion of parts. The case shall not form part of the contact or coil electrical circuits, but it may be part of the magnetic circuit.

3.5.3.1 Unsealed enclosures. Unsealed relays shall be totally enclosed for mechanical and dust protection and shall be explosion-proof (see 3.23). The enclosure design shall be such that pressure differentials cannot exist between the inside and outside to aggravate the moisture accumulation problem. The cover shall be rugged in design, constructed of high impact materials, and securely mounted to the relay. Metal covers shall be provided with a means for grounding as specified (see 3.1).

3.5.3.2 Hermetic sealing process. Relays shall be dried, degassed, and backfilled with an atmosphere and sealed such that the requirements of this specification are met. Adjunct sealant (see 6.11), if used, must comply with the following characteristics:

a. Shall not extend above 20 percent of the length of the exposed terminals above the glass meniscus.

b. Trace color is permitted if it is a natural result of the sealant process. Trace color shall not obscure identification of contrasting glass color.

c. Shall form, after curing, a permanent nonconductive, noncracking seal under all relay environments.

3.5.3.2.1 Hermetic seal rework. After the cover has been welded to the header, no rework shall be performed that requires removal of the cover from the header. Relays whose lowest specified load (resistive, inductive, and motor) for the power contacts is 25 amperes or greater are exempt from this requirement. Relays that have been reworked shall be resubmitted for group A inspection after rework.

3.5.3.3 Environmentally sealed (non-hermetic enclosures). Environmentally sealed enclosures shall be constructed by any means other than that defined under hermetically sealed enclosures (see 3.5.3.2) to achieve the degree of seal specified (see 3.1). Environmentally sealed relays shall be purged of all air and filled with a suitable gas of such characteristics that the leakage rate may be determined by conventional means.

3.5.3.4 Grounding enclosures. The mounting shall provide an effective electrical contact to ground when the relay is mounted.

3.5.3.5 Installation clearances. Adequate clearance shall be provided for the installation of terminals, mounting hardware, and the use of socket wrenches. Special installation tools shall not be required.

3.5.4 Threaded parts. All threaded parts shall be in accordance with FED-STD-H28 or applicable ANSI and ASME specifications.

3.5.5 Contacts. Contacts shall have load ratings and arrangements (see MIL-STD-1285) as specified (see 3.1); unless otherwise specified (see 3.1), shall be capable of carrying the maximum rated current continuously as well as making and breaking the specified current under all environmental conditions specified herein.

3.5.5.1 Contact springs. Contact springs shall be of corrosion resistant material or shall be suitably plated to resist corrosion.

3.5.6 Coil. Coils shall be adequately insulated electrically from the frames, the contacts, and any grounded parts. The resistance and rated voltage (or current) shall be as specified (see 3.1). Unless otherwise specified, coils shall be designed for continuous operation of maximum rated voltage (or current) and temperature (see 3.1).

3.5.6.1 Coil terminal identification. Terminal identification shall be marked on the relay as specified (see 3.1) and in accordance with MIL-STD-1285. When specified (see 3.1), a bead of contrasting color shall be used to designate the X1 positive terminal (see figure 3 and MIL-STD-1285).

Downloaded from http://www.everyspec.com

3.5.7 Latching relays. Latching relays with two coils shall be so designed that if both coils are energized simultaneously, the contacts should not achieve a neutral position (both the normally closed and normally open contacts are open). The relay shall be neutral screened as specified in 3.13.8 and 4.7.8.8. Specified dropout value (voltage or current) and release time are not applicable to latching relays.

3.5.8 Circuit diagram. The specified circuit diagram (see 3.1) shall be a terminal view, with symbols in accordance with ANSI Y32.2. For relays without an orientation tab, the diagram shall be oriented so that when the relay is held with the circuit diagram right side up, then rotated away from the viewer around a horizontal axis through the diagram until the header terminals face the viewer, each terminal shall be in the location shown on the circuit diagram. The circuit diagram orientation rule does not apply to relays with individual terminal identification.

3.5.8.1 Circuit diagram for dual coil relays. For relays with dual coils, the circuit diagram shall have a relationship between coil and contacts as specified in 3.5.8. Contacts shall be attracted toward a coil symbol when energized.

3.5.9 Mounting means (see 3.1).

3.5.9.1 Socket. Socket plug-in relays shall be designed so that the weight of the relay will be supported and the stability of the mounting will be provided by means other than the terminals.

3.5.9.2 Mounting studs. Mounting studs shall be as specified (see 3.1). No rotation, loosening, or deformation of fixed portions shall occur because of material flow or any mechanical forces involved in installation or removal of the relay. The mounting studs shall withstand for 1 minute, without damage, the static value of pull and torque specified in table I (see 3.5.10.2.5). The mounting studs shall be designed to withstand the applicable strength test procedure specified in 3.18 and 4.7.13.

TABLE I. Strength of mounting studs (static values of pull and torque).

Thread size	Force		Torque		Installation torque (recommended)	
	Pounds	Newtons	Inch-pounds	Newton-meters	Inch-pounds	Newton-meters
4-40 (.112 UNC)	7	31	10	1.13	7.5	0.85
6-32 (.138 UNC)	25	111	18	2.03	13.5	1.52
8-32 (.164 UNC)	35	155	37	4.18	27.8	3.14
10-32 (.190 UNF)	50	222	60	6.78	45.0	5.09
1/4-28 (.250 UNF)	60	266	100	11.3	75.0	8.48
5/16-24 (.312 UNF)	80	355	160	18.1	120.0	13.58
3/8-24 (.375 UNF)	115	511	275	31.1	206.3	23.33
7/16-20 (.438 UNF)	140	622	475	53.7	356.3	40.28

3.5.10 Terminals (electric). Relays shall have electric terminals as specified (see 3.1). No rotation or other loosening of a terminal, or any fixed portion of a terminal, shall be caused by material flow or shrinkage, or (for threaded terminals) any mechanical forces specified in table II involved in connection or disconnection, throughout the life of the relay.

Downloaded from http://www.everyspec.com

TABLE II. Strength of threaded terminals (static value of pull and torque).

Thread size	Force		Maximum test torque		Installation torque (recommended)	
	Pounds	Newtons	Inch-pounds	Newton-meters	Inch-pounds	Newton-meters
4-40 (.112 UNC)	5	22	4.4	0.497	3.3	0.373
6-32 (.138 UNC)	30	133	10.0	1.130	7.5	0.847
8-32 (.164 UNC)	35	156	20.0	2.260	15.0	1.695
10-32 (.190 UNF)	40	180	32.0	3.615	24.0	2.712
10-24 (.190 UNC)	40	180	35.0	3.954	26.3	2.972
1/4-28 (.250 (UNF)	50	222	75.0	8.474	56.3	6.361
5/16-24 (.312 UNF)	70	311	100.0	11.296	75.0	8.474
3/8-24 (.375 UNF)	100	445	150.0	16.948	112.5	12.710
7/16-20 (.438 UNF)	100	445	150.0	16.948	112.5	12.710
1/2-20 (.500 UNF)	100	445	150.0	16.948	112.5	12.710

3.5.10.1 Stud terminals (threaded). Stud terminals shall be supplied with hardware as specified (see 3.1). A minimum of three complete threads shall remain above the nut when it is backed off three complete turns from a position with all parts tightened in place. If the maximum temperature rating of the relay is greater than 125°C, soldered-in-place threaded terminal assemblies are prohibited.

3.5.10.1.1 Stud terminal seat. For threaded terminals, each terminal shall have a terminal seat that shall provide the normal current-conducting path. The diameter of the seat shall be equal to, or greater than, the diameter across the corresponding lug designed for the particular current and stud or screw size, or never less than the area necessary to assure that the current density shall not exceed 1,000 amperes per square inch. The seat area does not include the cross-sectional area of the stud.

3.5.10.1.2 Strength of stud terminals. Stud terminals shall be designed to withstand the maximum value of pull and torque specified in table II (see 3.5.10.2.5). The mounting studs shall be designed to withstand the maximum value of pull and torque of the applicable strength test procedure specified in 3.18 and 4.7.13.

3.5.10.2 Solder-hook, plug-in, and solder pin terminals.

3.5.10.2.1 Solder-hook terminals. Solder hook terminals used for a 2 amperes rating or less shall be designed to allow the securing of two AWG No. 20 stranded wires with 19 strands. Terminals used for more than 2 amperes rating shall be designed to allow the securing of three wires the size of which shall be as specified (see 3.1).

3.5.10.2.2 Plug-in terminations. Plug-in terminations shall conform to the arrangements or dimensions necessary for proper mating with the associated connectors or sockets. The mounting arrangement of the relay and its corresponding socket shall be so designed that the entire weight of the relay will be suspended and the stability of its mounting will be provided by an auxiliary mounting means other than the electrical terminals of the socket.

3.5.10.2.3 Solder pin terminals. Solder pin terminals shall be as specified (see 3.1).

3.5.10.2.4 Wire marks. When tin-alloy, nickel, or gold plating is used, an underplating of copper may be used to assure solid adhesion. A slight exposure of copper underplating or other underplating resulting from wire wrappings necessitated by the plating operation is acceptable (see figure 1).

Downloaded from http://www.everyspec.com

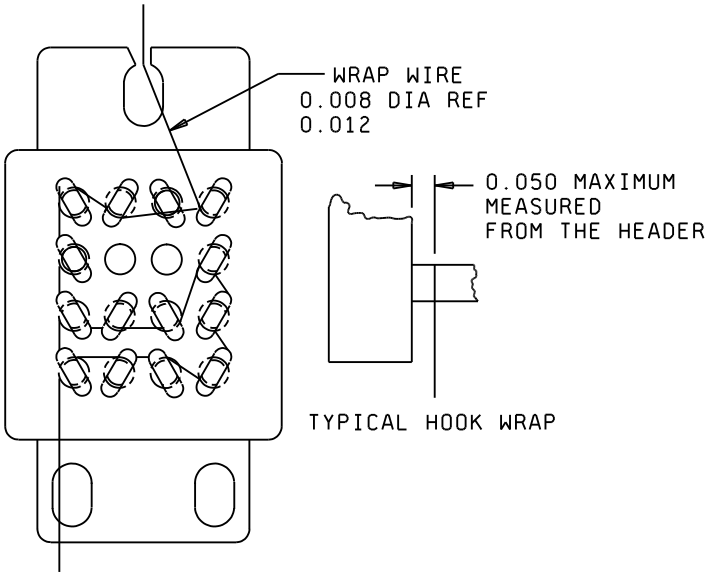

FIGURE 1. Wire marks.

3.5.10.2.5 Strength of terminals. The relay terminals shall be designed to withstand the applicable terminal strength performance procedure specified in 3.18 and 4.7.13.

3.5.10.3 Terminal finish. Finish of terminals shall provide a solid electrical contact and meet the performance requirements specified herein.

3.5.10.3.1 Solder dip (retinning) leads. The manufacturer may supply hot solder dipped terminals, provided that the hot solder dipping process has been approved by the qualifying activity and is specified on the individual order. Solder dipped terminals may be .003 inch (0.08 mm) larger than the maximum diameter specified (see 3.1). Icicles are a normal result of the hot solder dip process and shall not be grounds for rejection (see figure 2).

Downloaded from http://www.everyspec.com

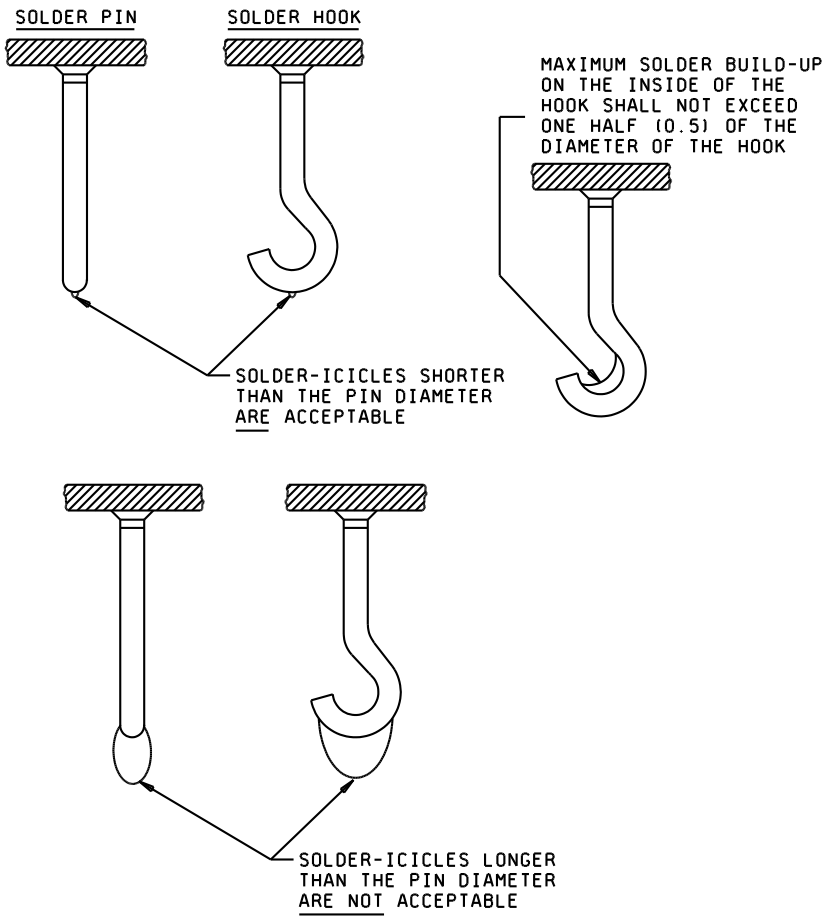

FIGURE 2. Solder-dip acceptability criteria (solder-icicle length limits).

Downloaded from http://www.everyspec.com

3.5.10.3.2 Qualifying activity approval. Approval of the solder dip process will be based on one of the following options. (NOTE: Solder dip of gold-plated plug-in leads is not allowed.) All visual examination criteria shall be in accordance with method 208 of MIL-STD-202:

a. When the original lead finish qualified was hot solder dip lead finish 52 of MIL-STD-1276 (The 200 microinch thickness is not applicable), the manufacturer shall use the same solder dip process for retinning as is used in the original manufacture of the product.

b. When the lead originally qualified was not hot solder dip lead finish 52 as prescribed above, approval for the process to be used for solder dip shall be based on the following test procedure:

(1) Six samples, selected from the normal manufacturing process flow after group A inspection, for each style and lead finish are subjected to the manufacturer's solder dip process. Following the solder dip process, the relays shall be subjected to groups A2 and A4 inspections.

(2) Three of the six samples are then subjected to the solderability test (see 3.8). No visual defects are allowed.

(3) Remaining three samples are subjected to the resistance to soldering heat test (see 3.9).

(4) All six samples shall be subjected to groups A2 and A4 inspection. Minor scratching of the terminals due to insertion into test sockets shall not be cause for rejection.

3.5.10.4 Terminal marking. Terminal identification shall be durably and legibly marked as specified (see 3.1), and in accordance with figure 3. For dual coil relays, the relationship between coil and contacts shall be as specified in table III.

3.5.10.5 Lead wire marking. Lead wires shall be color coded in accordance with figure 4.

TABLE III. Dual coil relay markings.

Coil energized	Contacts closed	
	Load	Auxiliary
X1-X2	A1-A2 B1-B2 C1-C2	11-12 31-32 51-52
Y1-Y2	A3-A2 (or A3-A4) B3-B2 (or B3-B4) C3-C2 (or C3-C4)	21-22 41-42 61-62

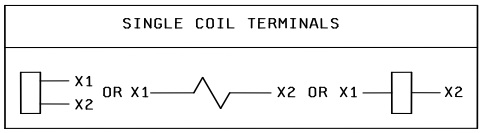

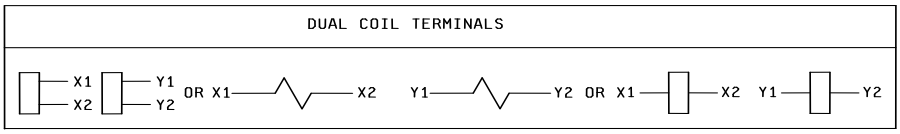

FIGURE 3. Terminal markings.

Downloaded from http://www.everyspec.com

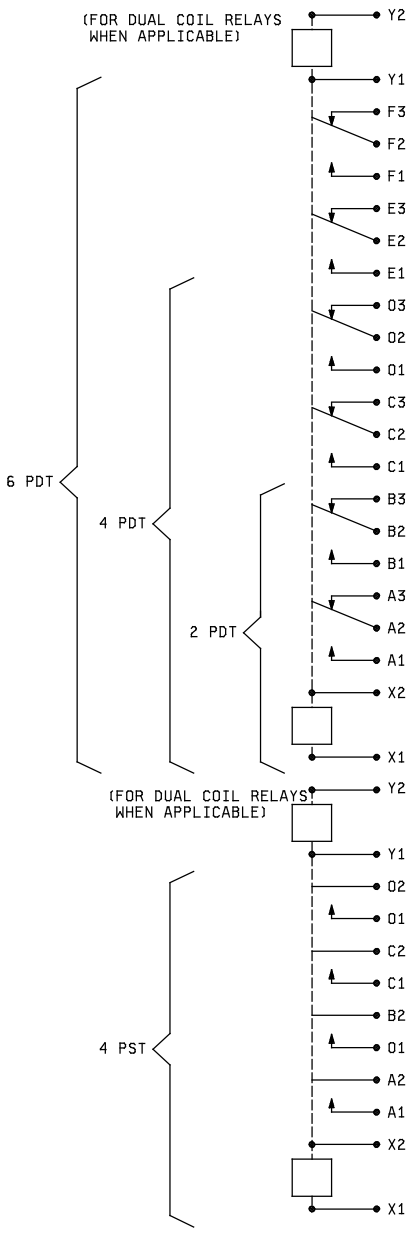

	BASE COLOR	FIRST STRIPE (WIDE)	SECOND STRIPE (NARROW)
Y2	WHITE	RED	--
Y1	WHITE	BROWN	--
F3	WHITE	BLUE	ORANGE
F2	WHITE	BLUE	RED
F1	WHITE	BLUE	BROWN
E3	WHITE	GREEN	ORANGE
E2	WHITE	GREEN	RED
E1	WHITE	GREEN	BROWN
O3	WHITE	YELLOW	ORANGE
O2	WHITE	YELLOW	RED
O1	WHITE	YELLOW	BROWN
C3	WHITE	ORANGE	ORANGE
C2	WHITE	ORANGE	RED
C1	WHITE	ORANGE	BROWN
B3	WHITE	RED	ORANGE
B2	WHITE	RED	RED
B1	WHITE	RED	BROWN
A3	WHITE	BROWN	ORANGE
A2	WHITE	BROWN	RED
A1	WHITE	BROWN	BROWN
X2	RED	--	--
X1	BROWN	--	--
Y2	WHITE	RED	
Y1	WHITE	BROWN	
O2	WHITE	YELLOW	RED
O1	WHITE	YELLOW	BROWN
C2	WHITE	ORANGE	RED
C1	WHITE	ORANGE	BROWN
B2	WHITE	RED	RED
O1	WHITE	RED	BROWN
A2	WHITE	BROWN	RED
A1	WHITE	BROWN	BROWN
X2	RED	--	--
X1	BROWN	--	--

STANDARD COLOR CODE

BROWN - 1 OR A
RED - 2 OR B
ORANGE- 3 OR C
YELLOW- 4 OR D
GREEN - 5 OR E
BLUE - 6 OR F

FIGURE 4. Schematic diagram and color codes.

Downloaded from http://www.everyspec.com

3.5.10.6 Terminal covers and barriers (when applicable). When applicable, the relay shall be provided with adequate covering or separation of terminal parts to provide protection against inadvertent shorting, grounding, or contact by personnel. Barriers may be removable or may be integral with removable covers. Terminal covers and barriers shall be designed to meet performance requirements applicable to the relay. The enclosure(s) shall be so designed that when the cover is removed, the relay shall be capable of operating without adjustment. The cover design shall be such that pressure differentials cannot exist between the inside and outside (see 3.1).

3.5.11 Rated duty. Unless otherwise specified (see 3.1), relays shall be designed for continuous duty.

3.5.12 Diodes. Relays supplied with diodes installed internally are not considered electrostatic discharge (ESD) sensitive. However, the diode may be ESD sensitive when not part of the coil circuit or wired internal to the coil. In such case, the diode shall be processed in accordance with the requirements specified in 4.2.3. Manufacturers may, at their option, test diodes used internally as specified in method 3015 of MIL-STD-883 modified to 16,000 volts to eliminate the need for the ESD protection program described above.

3.5.13 Stabilization of permanent magnets. The residual induction (flux) in permanent magnetic assemblies shall be reduced to a level where it will not be affected by demagnetizing forces encountered in normal service, handling, and any tests specified herein. The retraceability characteristics shall be compatible with all performance requirements of the relays.

3.6 In-process inspection (see 4.6.1).

3.6.1 Diode in-process screening (applicable to relays with diodes; see 3.1 and 4.6.1.1). Perform in process screening as specified. In-process inspection is not required when JANTX diodes or diodes screened to JANTX are used. Waiver of in-process screening requires qualifying activity approval.

3.7 Screening (when specified; see 4.7.2). The contact miss detector's monitoring level shall be less than 100 ohms maximum for relays tested during cycling. Unless otherwise specified (see 3.1), any relay shall have a final insulation resistance measurement of 10,000 megohms or greater.

3.8 Solderability (when specified; see 3.1 and 4.7.3). The critical (examination) area of solid wire pin and pin terminals shall be at least 95 percent covered with a continuous new solder coating in accordance with method 208 of MIL-STD-202. For solder-hook terminals greater than .045 inch (1.14 mm) in diameter, 95 percent of the total length of fillet, which is between the standard wrap wire and the terminal, shall be tangent to the surface of the terminal being tested, and shall be free of pinholes or voids. A ragged or interrupted line at the point of tangency between the fillet and the terminal under test shall be considered a failure.

3.9 Resistance to soldering heat (when specified; see 3.1 and 4.7.4). After testing, there shall be no damage which would adversely affect normal operation of the relay.

3.10 Seal (see 4.7.5).

3.10.1 Hermetic seal. The leakage rate shall not exceed 1×10^{-6} atmospheric cubic centimeters per second of air. For relays of 2 cubic inches volume or less, the leakage rate shall not exceed 1×10^{-8} atmospheric cubic centimeters per second of air.

3.10.2 Environmental seal. The leakage rate for environmentally sealed relays shall be as specified (see 3.1).

3.11 Insulation resistance (see 4.7.6). The insulation resistance shall be 100 megohms or greater.

3.12 Dielectric withstanding voltage (see 4.7.7). The relays shall withstand, without damage, the ac dielectric test voltages between all mutually insulated parts and between these points and case or ground in accordance with values specified in table IV. When the relays are tested as specified in 4.7.7 and 4.7.7.1 (at atmospheric pressure), a leakage current of more than 1.0 milliampere (mA) at the specified test voltage shall constitute failure. When dielectric withstanding voltage is performed following a load or endurance test specified in 4.7.22 (life), the dielectric test voltage may be reduced to 75 percent of the sea level value shown in table IV, but not less than 1,000 volts.

Downloaded from http://www.everyspec.com

3.12.1 At high temperature, high altitude pressure (see 4.7.7.2). Relays which are rated for use above 50,000 feet altitude shall be designed to withstand the altitude potentials specified in table IV. When relays are tested, they shall meet all the electrical requirements specified in 3.13.

TABLE IV. Dielectric withstanding voltage (50/60 Hz).

System voltage 1/	Sea level		Altitude 80,000 feet 4/ Test voltage (rms) (1 minute) 2/
	Test voltage (1 minute) rms 2/	Test voltage (2 to 5 seconds) rms 3/ manufacturer only	
28 dc	1,050	1,250	500
115 ac	1,250	1,500	500
115/200 ac 5/	1,500	1,800	700

1/ If coil and contacts are rated for different voltages, each shall be tested to case in accordance with its respective system voltage. However, the test between coil and contact terminals shall be in accordance with the higher of the two system voltages.
2/ The test potential shall be applied or reduced at a minimum rate of change of 250 volts per second.
3/ For performing conformance inspection on production samples, the 2 to 5 second test may be used by the manufacturer only in lieu of the 1 minute test. The 1 minute test shall be used for qualification, group B, and group C inspections or when defects are discovered in conformance inspection.
4/ Or altitude as specified (see 3.1). When an altitude above 80,000 feet is specified, the dielectric withstanding voltage is performed at 80,000 feet.
5/ For relays rated above 200 volts, the test potential for 1 minute shall be twice rated voltage plus 1,000 volts, with a minimum of 1,500 volts. The test potential for 2 to 5 seconds shall be 20 percent higher than the 1 minute test voltage. The test voltage at maximum specified altitude shall be 50 percent of the 1 minute value with a minimum of 750 volts root mean square (rms).

3.13 Electrical characteristics (see 4.7.8). The tests specified in 3.13.1 through 3.13.8 shall comprise the electrical characteristics tests. Unless otherwise specified, electrical characteristics shall be 100 percent inspected. For the purposes of this specification, dropout value (voltage or current), hold value (voltage or current), and release time are not applicable to latching relays. For latching relays, pickup value (voltage or current) is equivalent to latch/reset voltage, and operate time is equivalent to latch/reset time (see 6.1).

3.13.1 Coil resistance (not applicable to AC coils) (see 4.7.8.1). The coil resistance shall be as specified (see 3.1).

3.13.2 Maximum coil current (applicable to dc coils when specified and to all ac coils; see 4.7.8.2). The maximum coil current shall be as specified (see 3.1).

3.13.3 Static contact resistance or contact voltage drop (see 4.7.8.3). Unless otherwise specified (see 3.1), the static contact resistance shall not exceed 0.05 ohm or the contact voltage drop shall not exceed 0.100 volt (after life tests 0.125 volt) maximum for relays not fully rated at 25 amperes and below. Contact voltage drop for relays fully rated at 25 amperes and above shall not exceed 0.125 volt maximum (after life tests 0.150 volt).

3.13.4 Specified pickup or latch/reset, hold, and dropout values (voltages) (see 4.7.8.4). The specified pickup or latch/reset, hold, and dropout values (voltages) shall be as specified (see 3.1). Specified hold and dropout values (voltage) are not applicable to latching relays.

Downloaded from http://www.everyspec.com

3.13.5 Operate and release time (see 4.7.8.5). The operate and release or latch/reset time shall be as specified (see 3.1). In multipole relays, during each of the operate and the release time measurements, the difference between the first moving contact to make and the last moving contact to make shall not exceed 2 ms. This shall be exclusive of contact bounce. Release time is not applicable to latching relays.

3.13.5.1 Break before make (see 4.7.8.5.1). Moving contacts within a multipole relay shall show no evidence of any open contact closing before all closed contacts have opened (see 3.1). This applies to either state of the relay.

3.13.6 Contact bounce (see 4.7.8.6). Unless otherwise specified, the duration of the contact bounce shall not exceed 1.0 ms (see 3.1).

3.13.7 Coil transient suppression (applicable to dc operated relays with internal coil suppression) (see 4.7.8.7). Coils of dc operated relays shall not generate a back EMF greater than that specified (see 3.1), as maximum induced transient voltage.

3.13.8 Neutral screen (applicable to two coil latching relays only) (see 4.7.8.8). Latching relays shall either not assume a neutral position, or not fail to latch or reset after assuming a neutral position.

3.14 Thermal shock (see 4.7.9). When relays are tested as specified in 4.7.9, there shall be no damage to the relay, loosening of terminals, or cracking or flaking of glass insulation (other than cracking or chipping of the glass meniscus).

3.15 Shock (specified pulse) (see 4.7.10). Unless otherwise specified (see 3.1), there shall be no opening of closed contacts in excess of 10 μs, no closure or bridging of open contacts in excess of 1 μs, and no evidence of mechanical or electrical damage.

3.16 Vibration (see 4.7.11). Unless otherwise specified (see 3.1), there shall be no opening of closed contacts in excess of 10 μs and there shall be no closure or bridging of open contacts in excess of 1 μs and no evidence of mechanical or electrical damage.

3.17 Acceleration (when specified; see 3.1 and 4.7.12). The contacts of the relay shall remain in the de-energized position with no voltage applied to the coil and in the energized position when rated coil voltage is applied to the coil. Latching type relays shall remain in each latched position with no voltage on the coil. Unless otherwise specified (see 3.1), there shall be no opening of closed contacts in excess of 10 μs and there shall be no closure or bridging of open contacts in excess of 1 μs and no evidence of mechanical or electrical damage.

3.18 Strength of terminals and mounting studs (see 4.7.13).

3.18.1 Strength of threaded terminals and mounting studs (see 4.7.13.1). Relays having threaded stud type terminals or stud type mountings shall be tested to determine compliance with terminal strength design requirements specified in 3.5.9.2 and 3.5.10.1.2. The terminals/studs shall not loosen or rotate, and shall not leak greater than the specified leak rate. There shall be no deterioration of relay performance beyond the limits specified (see 3.1).

3.18.2 Strength of solder, plug-in, and wire-lead terminals (see 4.7.13.2). There shall be no loosening or breakage of the terminals, leakage greater than the specified leak rate, or any other damage that would affect relay performance beyond the specified limits.

3.19 Salt spray /corrosion (see 4.7.14). Following washing in cold running tap water and drying for 6 hours at 65°C, the relay shall show no evidence of corrosion sufficient to impair the operation of the relay.

3.20 Sand and dust (applicable to unsealed relays) (see 3.1 and 4.7.15). There shall be no evidence of damage sufficient to impair the operation of the relay.

3.21 Moisture resistance (applicable to unsealed, environmentally sealed, and hermetically sealed relays with potted solder pins) (see 3.5.3 and 4.7.16). Relays shall not exhibit a leakage current in excess of 100 mA with a potential of 150 V rms applied between the terminals and other exposed metal parts.

Downloaded from http://www.everyspec.com

3.22 Ozone (applicable to unsealed, environmentally sealed, and hermetically sealed relays with potted solder pins) (see 3.5.3 and 4.7.17). Relays shall exhibit no cracking of materials or other damage which will adversely affect subsequent performance of the relay. This test is not applicable when a material certification is submitted to the qualifying activity for similarity to an existing QPL product.

3.23 Explosion proof (applicable to unsealed relays) (see 3.5.3.1 and 4.7.18). Any explosion internal to the relay shall not rupture the case or ignite the external fuel mixture in the test chamber. This test is not applicable when a material certification is submitted to the qualifying activity for similarity to an existing QPL product.

3.24 Overload (see 4.7.19). There shall be no electrical failure, such as contact sticking, welding, or failure to make or break the specified overload current. Blowing of the fuse connected between case and load system ground or neutral shall constitute failure. The terminal temperature rise shall not exceed 75°C. (Monitoring of terminal temperature rise required only during qualification testing.) Relays indicating failure, but not verified as failures by a failure verification procedure approved by the qualifying activity, may be returned to test.

3.25 Rupture (see 4.7.20). There shall be no electrical failure, such as contact welding or failure to make or break the specified rupture current. Blowing of the fuse connected between case and load system ground or neutral shall constitute failure. The terminal temperature rise shall not exceed 75°C. (Monitoring of terminal temperature rise required only during qualification testing.) Relays indicating failure, but not verified as failures by a failure verification procedure approved by the qualifying activity, may be returned to test.

3.26 Time current characteristics at 25°C (when specified; see 3.1 and 4.7.21). There shall be no evidence of contact welding or sticking and the contact voltage drop shall meet the requirements of 3.13.3 after the test. The terminal temperature shall not exceed 75°C. (Monitoring of terminal temperature rise is required only during qualification testing.) Blowing of the fuse connected between case and load system ground or neutral shall constitute failure. Relays indicating failure, but not verified as failures by a failure verification procedure approved by the qualifying activity, may be returned to test.

3.27 Mechanical life (endurance at reduced load) (see 4.7.28). The relay shall be capable of operating at 25 percent of rated resistive load for four times the minimum operating cycles for relays under 25 amperes contact rating (resistive) and two times the specified minimum operating cycles for relays 25 amperes and over. Relays shall remain mechanically and electrically operative. There shall be no indication of mechanical resonance due to the frequency of energizing voltage. Relays indicating failure, but not verified as failures by a failure verification procedure approved by the qualifying activity, may be returned to test

3.28 Life (see 4.7.22). Relays shall be tested at each contact rating specified (see 3.1). Relays having two or more sets of contacts and rated for multiphase (115/200 V ac 3 phase), shall be capable of handling multiphase power on adjacent contacts. Phase to phase arcing shall constitute failure. There shall be no mechanical or electrical failure. Welding of contacts; failure to make, carry, or break the load; or blowing of the fuse connected between case and load system ground or neutral shall constitute a failure. The terminal temperature rise shall not exceed 75°C. (Monitoring of terminal temperature rise required only during qualification testing.) Relays indicating failure, but not verified as failures by a failure verification procedure approved by the qualifying activity, may be returned to test.

3.28.1 Load transfer, polyphase, ac (see 4.7.22.5). When polyphase load transfer is required (see 3.1), the relays shall be subjected to load transfer cycling tests specified. During testing, there shall be no phase-to-phase arc-over or welding (sticking) of relay contacts. Blowing of the case-to-ground fuse shall constitute failure. Relays indicating failure, but not verified as failures by a failure verification procedure approved by the qualifying activity, may be returned to test.

3.28.2 Mixed loads (see 4.7.22.6). When relays are tested as specified, there shall be no mechanical or electrical failures. The contact voltage drop shall not exceed the values specified. Relays indicating failure, but not verified as failures by a failure verification procedure approved by the qualifying activity, may be returned to test.

3.29 Resistance to solvents (see 4.7.23). All markings shall remain legible after testing.

3.30 Continuous current (see 4.7.24). There shall be no damage such as loosening of terminals, or any deterioration of performance beyond the limits specified (see 3.1). The terminal temperature rise shall not exceed 75°C.

Downloaded from http://www.everyspec.com

3.31 Mechanical interlock (where applicable; see 3.1 and 4.7.25). For relays provided with the mechanical interlocking feature, it shall be impossible to close one set of relay contacts whenever the other set of relay contacts is maintained closed in the manner specified.

3.32 Intermediate current (when specified; see 4.7.26). Unless otherwise specified (see 3.1), during cycling, the resistance of a closed contact shall be less than or equal to 3 ohms and the voltage across an open contact shall be 90 percent or more of applied load voltage. After cycling, the static contact resistance shall be measured at room ambient (20°C to 35°C) and shall not exceed the limits as specified (see 3.1). Intermediate current shall not be considered a low level or high level contact load rating (see 6.1.1). There shall be no mechanical or electrical failure. Welding of contacts; failure to make, carry, or break the load; or failure of the fuse connected between case and load system ground or neutral shall constitute a failure. Relays indicating failure, not verified as failures in accordance with a failure verification procedure approved by the qualifying activity, may be returned to test. During post life tests, failure of a diode shall constitute a failure.

3.33 Internal moisture (when specified; see 3.1 and 4.7.27). The contact load shall be 10 mA to 50 mA at 10 mV dc to 50 mV dc. After the specified contact stabilization time, see 3.1, the contact voltage drop shall not exceed 5 mV dc or the contact resistance shall not exceed 100 milliohms.

3.34 Recycled, recovered, or environmentally preferable materials. Recycled, recovered, or environmentally preferable materials should be used to the maximum extent possible, provided that the material meets or exceeds the operational and maintenance requirements, and promotes economically advantageous life cycle costs.

3.35 Pure tin. The use of pure tin, as an underplate or final finish, is prohibited both internally and externally. Tin content of relay components and solder shall not exceed 97 percent by mass. Tin shall be alloyed with a minimum of 3 percent lead, by mass (see 6.13). Use of lead-free, tin alloy high temperature solders for internal connections requires approval by the qualifying activity. The tin content of lead-free high temperature solders shall not exceed 97 percent by mass.

3.36 Marking.

3.36.1 JAN and J marking. The United States Government has adopted and is exercising legitimate control over the certification marks "JAN" and "J", respectively, to indicate that items so marked or identified are manufactured to, and meet all the requirements of specifications. Accordingly, items acquired to, and meeting all of the criteria specified herein and in applicable specifications shall bear the certification mark "JAN" except that items too small to bear the certification mark "JAN" shall bear the letter "J". The "JAN" and "J" shall be placed immediately before the part number except that if such location would place a hardship on the manufacturer in connection with such marking, the "JAN" or "J" may be located on the first line above or below the part number. Items furnished under contracts or orders which either permit or require deviation from the conditions or requirements specified herein on in applicable specifications shall not bear "JAN" or "J". In the event an item fails to meet the requirements of this specification and the applicable specification sheets, the manufacturer shall remove completely the military part number and the "JAN" or the "J" from the sample tested and also from all items represented by the sample. The "JAN" or "J" certification mark shall not be used on products acquired to contractor drawings or specifications. The United States Government has obtained Certificate of Registration Number 504,860 for the certification mark "JAN" and Registration Number 1,586,261 for the certification mark "J".

3.36.2 Identification marking (full). Relays shall be marked in accordance with method I of MIL-STD-1285 and shall include the following information:

a. PIN (see 1.2.3 and 3.1). When the “JAN” or “J” marking is placed before the PIN, one blank space shall be between the “JAN” or “J” and the part number. No alphanumeric characters shall be between the “JAN” or “J” and the part number.

b. JAN” or “J” brand. When the “JAN” or “J” is marked above or below the military “PIN,” the first letter of “JAN” or “J” marking shall be directly above or below the first alphanumeric character of the military part number.”

c. Date code (When the “JAN” or “J” marking is placed before the date code, the designation shall be immediately preceding the first digit of the date code).

Downloaded from http://www.everyspec.com

d. Source code.

e. Lot symbol (optional).

f. Rated coil voltage (or current) (see 3.1) and when applicable, operating frequency.

g. Coil resistance or coil current (when applicable see; see 3.1).

h. Contact rating (the highest dc or ac resistive load rating, and all individual frequencies if applicable, shall be marked) (see 3.1).

i. Circuit diagram (see 3.5.8).

j. Terminal marking (when applicable; see 3.1, 3.5.6.1, and 3.5.10.4).

k. Manufacturer's part number is optional.

3.36.3 Interchangeability. All parts having the same PIN shall be directly and completely interchangeable with each other with respect to installation and performance to the extent specified in the associated specification sheet (see 3.1).

3.37 Header glass. Header glass may have small irregularities, such as bubbles, chips, and cracks. Microscopic examination with up to 10 power magnification shall be used. The acceptability of the defects shall be based on figure 5 and the following:

a. Broken or open blisters having sharp edges are not acceptable.

b. Blisters whose diameters exceed one-third of the radial distance between the terminal and the corresponding header metal (for a cluster of blisters the combined diameters shall apply) are not acceptable (see figure 5).

c. Foreign material in or on the surface of the glass is not acceptable.

d. Dark spots (pigment concentrations) whose diameters exceed one-third of the radial distance between the terminal and the corresponding header metal are not acceptable.

e. Circumferential cracks which extend more than 90 degrees are not acceptable (see figure 5).

f. Radial cracks whose lengths exceed one-third the distance between the terminal and the corresponding header metal are not acceptable (see figure 5).

g. Tangential cracks which are not confined to a single zone are not acceptable (see figure 5).

h. Surface chips whose lengths or widths exceed one-third the distance between the terminal and the corresponding header metal are not acceptable (see figure 5).

i. Chipped meniscuses are acceptable if they do not extend below the surface of the glass, and to the extent of 3.35h).

j. Meniscuses which extend up the terminal greater than .020 inch (0.51 mm) or one-third the terminal diameter, whichever is greater, are not acceptable.

k. Peripheral cracks at the boundary of the glass and the surrounding header metal are not acceptable.

l. Any terminals which appear to be separated from the glass are not acceptable.

In case of dispute, all relays shall meet the applicable insulation resistance, dielectric withstanding voltage, and seal requirements, regardless of the acceptability of the header glass.

Downloaded from http://www.everyspec.com

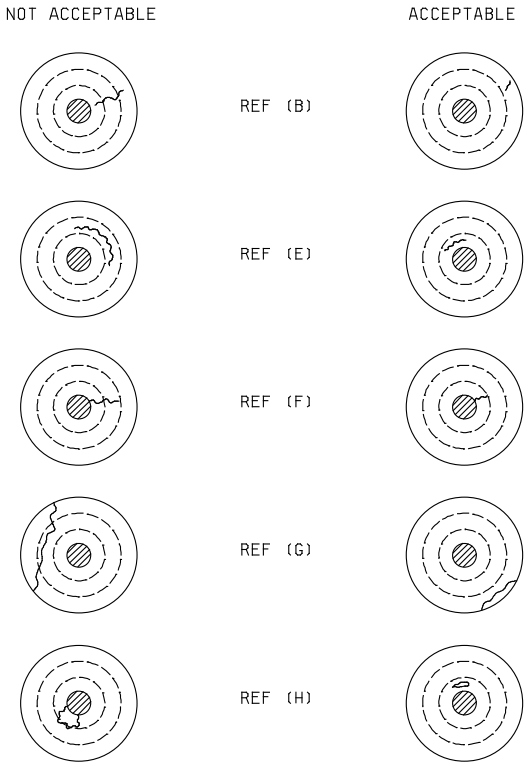

NOTE: Dashed lines indicate radial distance between terminal and header metal dividing the glass into three equal parts (zones).

FIGURE 5. Header inspection aid.

3.38 Low temperature operation (see 4.7.29). Following the test and at the specified low temperature, the pickup voltage, dropout voltage, and contact voltage drop shall meet the requirements of 3.13.4 and 3.13.3 and shall continue to meet pickup and dropout voltage requirements until the relay returns to room temperature. Relays which contain permanent magnets in the magnetic circuit shall, in addition to the above test, be subjected to the demagnetizing effect of a sudden application of maximum coil voltage for one operation at the beginning of the second 24-hour period and the high temperature pickup voltage shall meet the requirements of 3.13.4.

3.39 Workmanship. Relays shall be uniform in quality and shall be free of cracked or displaced parts, sharp edges, burrs, and other defects that could affect their life, serviceability, or appearance.

4. VERIFICATION

4.1 Classification of inspections. The inspections requirements specified herein are classified as follows:

a. Qualification inspection (see 4.4).

b. Verification of qualification (see 4.5).

c. In-process, conformance, and periodic inspection (see 4.6).

Downloaded from http://www.everyspec.com

4.2 QPL system. The manufacturer shall establish and maintain a QPL system as described in 3.3. Evidence of such compliance shall be verified by the qualifying activity of this specification as a prerequisite for the qualification and retention of qualification.

4.2.1 SPC. The manufacturer shall establish and maintain a SPC system as described in 3.3.1 Evidence of such compliance shall be verified by the qualifying activity as a prerequisite for the qualification and retention of qualification.

4.2.2 Traceability requirements. The manufacturer shall establish and maintain a procedure whereby lot date codes incorporate traceability. This procedure shall be approved by the qualifying activity.

Traceability shall apply as a minimum, to the following:

a. Header-contact subassembly with the lot number (as applicable).

   (1) Stationary or moving contact (a contact may consist of an individual wire or a contact blade and contact button).

   (2) Header with glass to metal sealed leads in place with the lot number.

   (3) Return spring(s).

   (4) Diodes (when applicable) with the lot number.

   (5) Magnets (when applicable).

b. Motor subassembly with the lot number (as applicable).

   (1) Moving contact blade assembly (a contact may consist of a contact button and/or contact blade) (when applicable).

   (2) Wound coils with the lot number.

   (3) Armature assembly.

   (4) Diodes (when applicable) with the lot number.

   (5) Magnets (when applicable).

   (6) Return spring(s) (when applicable).

4.2.3 ESD protection program. This requirement is applicable to all manufacturers who handle ESD component parts and materials in the relay manufacturing and/or testing process. The manufacturer shall establish and maintain an ESD control program. Evidence of such compliance shall be verified by the qualifying activity of this specification as a prerequisite for qualification and continued qualification. As a minimum, this system must address the identification of ESD sub-components and end items, facilities, training, design protection, handling procedures, marking, cleaning, preservation, packaging, and quality assurance. A model ESD control program is available from the qualifying activity and may be used as a guideline document. Further guidance for ESD control is available from the EOS/ESD Association and the Electronics Industry Association (EIA).

4.3 Inspection conditions. Unless otherwise specified herein, the test conditions specified in the "General Requirements" section of MIL-STD-202 shall be considered for reference purposes only. All inspections may be performed at ambient environmental conditions consistent with industry practice.

4.3.1 Power supply. Unless otherwise specified herein, the power supply shall have no more than 10 percent regulation at 110 percent of the specified test load current. A dc power supply shall have no more than 5 percent ripple voltage. An ac power supply shall be within 1 percent of the specified frequency and shall be sinusoidal with a form factor between 0.95 and 1.25.

Downloaded from http://www.everyspec.com

4.3.2 Grounding. Unless otherwise specified (see 3.1), the negative side of the dc power supply shall be grounded. One side of single phase ac power supply shall be grounded.

4.3.3 Load conditions during tests. The coil(s) of the relay under test shall have one side connected to the coil power supply ground. All tests during which the contacts are loaded and being cycled, except dielectric withstanding voltage, shall be conducted with the case of the relay connected to the power supply ground or neutral through a normal blow fuse rated at 5 percent of the contact load maximum, but not less than 0.100 ampere. For relays with nongrounded case ratings, tests for isolated-case ratings may be made with the case electrically isolated from the power supply ground.

4.3.4 Testing devices (electrical characteristics only). Unless otherwise specified, devices used in the testing of relays not fully rated 25 amperes and below, shall not cause the relays to make or break loads above 100 mA resistive at 6 V dc or peak ac maximum open circuit.

4.3.5 Mounting relays for ambient temperature tests. When the relays are subjected to the tests specified in 4.7.22.6 (mixed loads) and 4.7.26 (intermediate current) they may be mounted on a heat sink in accordance with the following:

a. Each relay may be attached by its normal mounting means to a .063 inch (1.59 mm) thick minimum, flat aluminum plate heat sink. The heat sink shall be designed to place every relay in the center of its own square space whose total surface area (both sides) is eight times the outside surface area of the relay, excluding mounting. Relays without mounts shall be held to the heat sink with a metal strap .250 inch (6.35 mm) wide by .015 inch (0.38 mm) maximum thickness. The heat sink assembly shall be suspended by twine or other nonheat conducting material.

b. Chamber temperature shall be controlled to maintain the temperature at the specified ambient extremes (see 3.1).

4.3.6 Methods of examination and test. Application of coil power to relays under test shall be such that plus polarity is applied to the color coded terminal when applicable; or to the lower numbered terminal when color coding is not used. Testing of latching relays shall be repeated with the relay in each operated position.

4.3.7 Tolerances. Unless otherwise specified (see 3.1), all electrical, environmental, and mechanical parameters shall have a tolerance of ±10 percent.

4.3.8 Alternate test equipment. Test circuits and test equipment herein are intended to provide guidance to the relay manufacturer. Use of any alternate test circuits or test equipment shall be approved by the qualifying activity prior to use.

4.3.9 Temperature. Unless otherwise specified, relays shall be tested at an ambient temperature of 25°C ±2°C and, at the discretion of the manufacturer, the in-process, conformance, and periodic inspections (see 4.6), may be conducted at ambient temperatures in the range of 20°C to 35°C, inclusive.

4.3.10 Wire. In any of the specified load tests (see 4.7.22; life), each individual wire used to connect the relay terminals to the specified loads shall be a minimum of 3 feet in length and of an applicable size conductor (copper) for use in free air as listed in table V determined by the rated resistive load of the relay. If the relay rating does not coincide with wire size, the next larger diameter wire shall be used.

Downloaded from http://www.everyspec.com

TABLE V. Current-carrying capacity of conductors.

Wire size		Continuous-duty current - amperes	
Aluminum	Copper	Single wire In free air	Wires in conduit or bundle
	24		2
	22		5
	20	11	7.5
	18	16	10
	16	22	13
	14	32	17
	12	41	23
	10	55	33
	8	73	46
	6	101	60
	4	135	80
	2	181	100
	1/ 1	211	125
	1/ 0	245	150
	1/ 00	283	175
	1/ 000	328	200
	1/ 0000	380	225
8		60	36
6		83	50
4		108	66
2		152	82
0		174	105
1/ 00		202	123
1/ 000		235	145
1/ 0000		266	162
		303	190

1/ Use of the wire size indicated requires approval from the qualifying activity.

4.3.10.1 Wire application criteria. When wire gauges selected are smaller than those specified in table V, or as specified (see 3.1), environmental and load deratings must be considered since relay overheating and failure may occur due to the reduced heat sinking capacity of the smaller gauge wire.

4.3.11 Terminal lugs. Wire shall be terminated with an applicable size and type of terminal lug.

4.3.12 Terminal covers and barriers. When terminal covers or barriers, or both, are specified (see 3.1), all load and environmental tests shall be conducted with the terminal covers or barriers, or both, in place.

4.3.13 Attitude. Unless otherwise specified, the qualification inspection (see 4.4), shall be conducted with the relay mounted in the position most likely to cause malfunctioning. This position shall be shown or otherwise noted in test reports.

4.4 Qualification inspection. Qualification inspection shall be performed at a laboratory acceptable to the Government (see 6.3) on sample units produced with equipment and procedures normally used in production. Variable measurements, as applicable, shall be recorded.

4.4.1 Qualification. A certification of construction to the materials requirements of 3.4 and the interface and construction requirements of 3.5 shall accompany the submission of qualification inspection results to the qualifying activity.

Downloaded from http://www.everyspec.com

4.4.1.1 Sample size. The number of relays to be subjected to qualification inspection shall be as specified in table VI (for relays rated not fully rated at 25 amperes) or table VII (for relays fully rated 25 amperes and above). The sample shall be selected from a production run and shall be produced with equipment or procedures normally used in production. The qualification sample shall be as defined in table VI (for relays rated not fully rated at 25 amperes) or table VII (for relays fully rated 25 amperes and above).

4.4.2 Inspection routine. Sample units shall be subjected to qualification inspection outlined in table VI (for relays not fully rated at 25 amperes) or table VII (for relays fully rated 25 amperes and above), in the order shown, except that group Q2 through group Q9 (table VI) or group Q8 (table VII) inclusive, may be conducted concurrently. All sample units shall be subjected to the inspections of Q1. These sample units shall then be divided into the number of groups as specified in table VI (for relays not fully rated at 25 amperes) or table VII (for relays fully rated 25 amperes and above) and subjected to the inspections specified for their particular group.

Downloaded from http://www.everyspec.com

TABLE VI. Qualification inspection (for relays not fully rated at 25 amperes).

Inspection	Requirement paragraph	Test method paragraph	Number of sample units to be inspected	Number of failures allowed
Q1 1/				
Visual and mechanical inspection (internal) 2/	3.1 and 3.37	4.7.1		
Run-in screening (when specified)	3.7	4.7.2		
Internal moisture	3.33	4.7.27	All sample units	0
Solderability (3 sample units) 3/	3.8	4.7.3		
Dielectric withstanding voltage	3.12	4.7.7		
Insulation resistance	3.11	4.7.6		
Electrical characteristics	3.13	4.7.8		
Visual and mechanical inspection (external) (dimensional check on 2 sample units only)	3.1, 3.34, 3.35, 3.37	4.7.1		
Seal	3.10	4.7.5		
Q2				
Low temperature operation	3.38	4.7.29		
Thermal shock	3.14	4.7.9		
Resistance to solvents	3.29	4.7.23		
Shock (specified pulse)	3.15	4.7.10	4	1
Vibration (sinusoidal)	3.16	4.7.11.1		
Vibration (random)	3.16	4.7.11.2		
Acceleration (when specified)	3.17	4.7.12		
Terminal strength	3.18	4.7.13		
Dielectric withstanding voltage	3.12	4.7.7		
Insulation resistance	3.11	4.7.6		
Electrical characteristics	3.13	4.7.8		
Seal	3.10	4.7.5		
Q3				
Resistance to soldering heat	3.9	4.7.4		
Salt spray/corrosion	3.19	4.7.14	4	1
Dielectric withstanding voltage	3.12	4.7.7		
Insulation resistance	3.11	4.7.6		
Electrical characteristics	3.13	4.7.8		
Seal	3.10	4.7.5		
Q4				
Overload (see table XII) 4/ 5/	3.24	4.7.19		
Life 6/	3.28	4.7.22	7/	1
Dielectric withstanding voltage	3.12	4.7.7		
Insulation resistance	3.11	4.7.6		
Electrical characteristics	3.13	4.7.8		

See footnotes at end of table.

Downloaded from http://www.everyspec.com

TABLE VI. Qualification inspection (for relays rated not fully rated at 25 amperes) - Continued.

Inspection	Requirement paragraph	Test method paragraph	Number of sample units to be inspected	Number of failures allowed
Q5				
Intermediate current (when specified)	3.32	4.7.26		
Dielectric withstanding voltage	3.12	4.7.7	4	1
Insulation resistance	3.11	4.7.6		
Electrical characteristics	3.13	4.7.8		
Q6				
Mechanical life	3.27	4.7.28		
Dielectric withstanding voltage	3.12	4.7.7	1	0
Insulation resistance	3.11	4.7.6		
Operate and release time	3.13.5	4.7.8.5		
Q7				
Rupture 8/	3.25	4.7.20		
Dielectric withstanding voltage	3.12	4.7.7	2	0
Insulation resistance	3.11	4.7.6		
Seal	3.10	4.7.5		
Q8				
Time current relay characteristics	3.26	4.7.21		
Dielectric withstanding voltage	3.12	4.7.7	2	0
Insulation resistance	3.11	4.7.6		
Electrical characteristics	3.13	4.7.8		
Seal	3.10	4.7.5		
Q9				
Continuous current	3.30	4.7.24		
Dielectric withstanding voltage	3.12	4.7.7	2	0
Insulation resistance	3.11	4.7.6		
Electrical characteristics	3.13	4.7.8		
Seal	3.10	4.7.5		

1/ Applicable to MIL-PRF-6106/12, MIL-PRF-6106/13, MIL-PRF-6106/19, MIL-PRF-6106/20, MIL-PRF-6106/38, MIL-PRF-6106/39, MIL-PRF-6106/40, and MS27742.

2/ One sample unit remaining unsealed shall be subjected to the internal inspection.

3/ Solderability samples are not subjected to dielectric withstanding voltage, insulation resistance, electrical characteristics, and seal.

4/ Applicable to high level ratings only. Overload samples to be assigned two for dc and two each for ac 3-phase. If ac 3-phase is not applicable, assign two samples for ac 1-phase. If ac is not applicable at all, test all four samples for dc.

5/ When 115/200 V ac, 3 phase testing is specified, 115 V ac, 1 phase testing is not required.

6/ The sample size shall be equally divided among the specified contact ratings and shall be of sufficient size to test a minimum of two relays per contact rating with rated loads on all contacts.

7/ Four relays minimum. For relays with two or more contact ratings, two relays per contact rating shall be tested.

8/ One unit shall be tested for the ac rupture load and one for the dc rupture load. If only one rating is specified, such as ac or dc, then both relays of the test sample group shall be tested for the one rating. If rupture is not specified (see 3.1), this group shall be omitted from the qualification program.

Downloaded from http://www.everyspec.com

TABLE VII. Qualification inspection (for relays fully rated 25 amperes and above).

Inspection	Requirement paragraph	Test method paragraph	Number of sample units to be inspected	Number of failures allowed
Q1				
Visual and mechanical inspection	3.1 and 3.37	4.7.1	All sample units	0
Dielectric withstanding voltage	3.12	4.7.7		
Insulation resistance	3.11	4.7.6		
Electrical characteristics	3.13	4.7.8		
Visual and mechanical inspection (external) (dimensional check on 2 sample units only)	3.1, 3.34, 3.35, 3.37	4.7.1		
Seal	3.10	4.7.5		
Q2				
Low temperature operation	3.38	4.7.29	1	0
Thermal shock	3.14	4.7.9		
Resistance to solvents 1/	3.29	4.7.23		
Shock (specified pulse)	3.15	4.7.10		
Vibration (sinusoidal)	3.16	4.7.11.1		
Vibration (random) (when specified)	3.16	4.7.11.2		
Acceleration (when specified)	3.17	4.7.12		
Terminal strength	3.18	4.7.13		
Dielectric withstanding voltage	3.12	4.7.7		
Insulation resistance	3.11	4.7.6		
Electrical characteristics	3.13	4.7.8		
Seal	3.10	4.7.5		
Q3				
Rupture 2/	3.25	4.7.20	2	0
Salt spray/corrosion	3.19	4.7.14		
Dielectric withstanding voltage	3.12	4.7.7		
Insulation resistance	3.11	4.7.6		
Seal	3.10	4.7.5		
Q4				
Overload 3/	3.24	4.7.19	5/	1
Life 4/ 6/	3.28	4.7.22		
Dielectric withstanding voltage	3.12	4.7.7		
Insulation resistance	3.11	4.7.6		
Electrical characteristics	3.13	4.7.8		

See footnotes at end of table.

Downloaded from http://www.everyspec.com

TABLE VII. Qualification inspection (for relays fully rated 25 Amperes and above) - Continued.

Inspection	Requirement paragraph	Test method paragraph	Number of sample units to be inspected	Number of failures allowed
Q5				
Mechanical interlock (when specified, see 3.1)	3.31	4.7.25		
Mechanical life	3.27	4.7.28	1	0
Dielectric withstanding voltage	3.12	4.7.7		
Insulation resistance	3.11	4.7.6		
Operate and release time	3.13.5	4.7.8.5		
Visual inspection (external)	3.1, 3.35, 3.37	4.7.1		
Q6				
Sand and dust	3.20	4.7.15	1	0
Dielectric withstanding voltage	3.12	4.7.7		
Insulation resistance	3.11	4.7.6		
Electrical characteristics	3.13	4.7.8		
Q7				
Continuous current	3.30	4.7.24		
Dielectric withstanding voltage	3.12	4.7.7	1	0
Insulation resistance	3.11	4.7.6		
Electrical characteristics	3.13	4.7.8		
Visual inspection (external)	3.1, 3.35, 3.37	4.7.1		
Seal	3.10	4.7.5		
Q8				
Moisture resistance	3.21	4.7.16		
Ozone	3.22	4.7.17	1	0
Explosion proof	3.23	4.7.18		
Electrical characteristics	3.13	4.7.8		
Seal	3.10	4.7.5		

1/ Two samples from Q4 life testing shall be used to provide the required number of samples for testing.
2/ One unit shall be tested for the ac rupture load and one for the dc rupture load. If only one rating is specified, such as ac or dc, then both relays of the test sample group shall be tested for the one rating. If rupture is not specified (see 3.1), this group shall be omitted from the qualification program.
3/ Applicable to high level ratings only. Overload samples to be assigned two for dc and two each for ac 3-phase. If ac 3-phase is not applicable, assign two samples for ac 1-phase. If ac is not applicable at all, test all four samples for dc.
4/ The sample size shall be equally divided among the specified contact ratings and shall be of sufficient size to test a minimum of one relay per contact rating with rated loads on all contacts.
5/ Four relays minimum. For relays with two or more contact ratings, one relay per contact rating shall be tested.
6/ When 115/200 V ac, 3 phase testing is specified, 115 V ac, 1 phase testing is not required.

Downloaded from http://www.everyspec.com

4.4.3 Failures. Failures in excess of those allowed in table VI or VII shall be cause for refusal to grant qualification approval.

4.5 Verification of qualification. Every 12 months the manufacturer shall provide verification of qualification to the qualifying activity. Continuation of qualification is based on meeting the following requirements. Variables measurements, as applicable, shall be recorded.

a. MIL-STD-790 program.

b. Design of the relay has not been modified.

c. Lot rejection does not exceed 10 percent of the lots submitted to group A, or one lot, whichever is greater (when applicable).

d. Periodic group B and group C inspection.

4.6 In-process, conformance, and periodic inspections.

4.6.1 In-process inspection (see 3.6).

4.6.1.1 Diode in-process screening (see 3.6.1). Each manufacturer shall establish a diode screening process as approved by the qualifying activity. As a minimum, this process shall include a 24 hour minimum burn-in at +125°C minimum and may use MIL-STD-750 as a guide. This process shall be performed prior to screening (see 4.7.2).

4.6.2 Conformance inspection.

4.6.2.1 Inspection of product for delivery. Inspection of product for delivery shall consist of group A inspection.

4.6.2.1.1 Inspection and production lot.

4.6.2.1.1.1 Inspection lot. An inspection lot shall consist of all the relays of the same specification sheet, and those of similar design and construction, manufactured under essentially the same processes and conditions during a manufacturing period of 1 month maximum. The manufacturer shall define the period for an inspection lot. For purposes of lot formation, all terminal types and mounting configurations may be combined.

4.6.2.1.1.2 Production lot. A production lot shall consist of all relays of the same PIN. Manufacture of all parts in the lot shall have been started, processed, assembled, and tested as a group. Lot identity shall be maintained throughout the manufacturing cycle.

4.6.2.2 Group A inspection. Group A inspection shall consist of the inspections specified in table VIII.

4.6.2.2.1 A1, A2, and A4 tests. The A1, A2, and A4 tests shall be performed on a production lot basis on 100 percent of the product supplied under this specification, except as noted. Group A1 testing is applicable when specified (see 3.1). The obsolete terms “type I ER” and “type I ER screening”, in specification sheets, MS sheets, or AN Aeronautical standards, invoke the requirement for group A1 performance. Relays that do not meet specification requirements of these groups shall be removed from the lot.

4.6.2.2.1.1 Sampling plan. The tests in A1, A2, and A4 shall be performed on each relay offered for inspection, except as noted.

Downloaded from http://www.everyspec.com

4.6.2.2.1.2 Rejected lots. Relays that do not meet the requirements of the tests in A1 and A4 shall be rejected and shall be removed from the lot. For relays prohibited from hermetic seal rework (see 3.5.3.2.1) if more than 5 percent of the relays are discarded during A2 testing, the production lot shall be rejected and not offered for reinspection.

4.6.2.2.2 A3 tests.

4.6.2.2.2.1 Sampling plan. Two samples shall be selected randomly from each inspection lot and subjected to the A3 solderability test. If there are one or more defects, the lot shall be considered to have failed. Relays failing the A2 electrical tests, or rejected for other criteria which will not influence solderability, may be used for solderability testing. All rejected relays used as samples must accompany the acceptable relays through all processing environments. The rejected relays shall be marked in a definite manner in order to preclude mixing with acceptable parts.

4.6.2.2.2.2 Rejected lots. In the event of one or more defects, the inspection lot is rejected. The manufacturer may use one of the following options to rework the lot:

a. Each production lot that was used to form the failed inspection lot shall be individually submitted to the solderability test as required in 4.7.3. Production lots that pass the solderability test are acceptable for shipment after successful completion of group A4. Production lots failing the solderability test can be reworked as described in 4.6.2.2.2.2b and 4.6.2.2.2.2c.

b. The manufacturer submits the failed lot to a 100 percent solder dip using an approved solder dip process in accordance with 3.5.10.3.1. Two additional samples shall be selected and subjected to the solderability test with zero defects allowed. If the lot fails this solderability test, the lot shall be rejected and shall not be furnished against the requirements of this specification.

c. The manufacturer may submit the failed lot to a strip and replate process followed by a complete group A inspection. The reworked lot shall be considered a new lot for the purpose of the 5 percent requirement of A2. If the lot fails this solderability test, the lot shall be rejected and shall not be furnished against the requirements of this specification.

Downloaded from http://www.everyspec.com

TABLE VIII. Group A inspection. 1/

Inspection	Requirement paragraph	Test method paragraph	Inspection requirements
A1 2/			
Vibration, sinusoidal	3.16	4.7.11.3	100 percent
Run-in screening	3.7	4.7.2	
A2 3/			
Dielectric withstanding voltage	3.12	4.7.7	100 percent
Insulation resistance	3.11	4.7.6	
Electrical characteristics	3.13	4.7.8	
A3			
Solderability	3.8	4.7.3	2 samples
A4			
Visual and mechanical inspection (external) 4/	3.1, 3.34, 3.35, 3.37	4.7.1	
Seal 5/	3.10	4.7.5	100 percent

1/ Test groups shall be in the order shown (see 3/).
2/ Applicable to MIL-PRF-6106/12, MIL-PRF-6106/13, MIL-PRF-6106/19, MIL-PRF-6106/20, MIL-PRF-6106/38, MIL-PRF-6106/39, MIL-PRF-6106/40, and MS27742.
3/ Testing sequence is optional, except that dielectric withstanding voltage shall precede insulation resistance.
4/ Minor defects, such as marking may be reworked. A two piece sample of each lot shall be mechanically inspected and visually inspected for cracked glass. If cracks exceeding the allowable limits are found, the entire lot shall be inspected to the criteria of 3.35.
5/ For relays designed with evacuation ports, the seal test may be performed as a final assembly operation prior to performing group A inspection on type I and type III, provided this test is performed on all of the relays.

4.6.3 Periodic inspections. Periodic inspections shall consist of group B and group C. Except where the results of these inspections show noncompliance with the applicable requirements, delivery of products which have passed group A shall not be delayed pending the results of these periodic inspections. Unless otherwise specified, data for periodic inspections shall be variable type data.

4.6.3.1 Group B inspection. Group B inspection shall consist of the tests specified in table IX and shall be made on sample units which have been subjected to and have passed the group A inspection.

4.6.3.1.1 Sampling plan. Sample selection for group B shall be made on lots which have passed group A inspection (inspection lot). The number of samples selected for testing shall be in accordance with the following schedule:

Total production of all inspection lots	Sample size
0	0
1 to 100	1
Each additional 500	1

This plan shall be performed for all production during the retention period, with reports submitted to the qualifying activity on a yearly basis. In the event no production occurs for the year, a statement of no production shall be provided to the qualifying activity

4.6.3.1.1.1 Failures. No failures are permitted.

4.6.3.1.2 Disposition of sample units. Sample units which have been subjected to group B inspection shall not be delivered on the contract or order (see 4.6.3.3).

Downloaded from http://www.everyspec.com

TABLE IX. Group B inspection.

Inspection	Requirement paragraph	Test method paragraph
Life 1/ 2/ 3/	3.28	4.7.22
Dielectric withstanding voltage 4/	3.12	4.7.7
Insulation resistance 4/	3.11	4.7.6
Electrical characteristics 4/	3.13	4.7.8
Visual inspection (external)	3.1, 3.35, 3.37	4.7.1

1/ Sample unit shall be tested in a predetermined sequence as defined by the manufacturer and approved by the qualifying activity. All loads specified in the applicable specification sheet, except intermediate current, shall be represented. All loads need not be represented in a 12-month maintenance period, but shall be represented within three 12-month maintenance periods.
2/ When 115/200 V ac, 3 phase testing is specified, 115 V ac, 1 phase testing is not required.
3/ If the lamp load is equal to or less than 0.5 times the motor load rating, the lamp load test need not be run.
4/ Testing sequence is optional, except that dielectric withstanding voltage shall precede insulation resistance.

4.6.3.2 Group C inspection. Group C inspection shall consist of the tests specified in table X. Group C inspection shall be made on sample units selected from inspection lots which have passed the group A inspection and may be produced during or at the end of the three year maintenance period.

4.6.3.2.1 Sampling plan. All inspections shall be performed every 36 months. The number of sample units shall be as shown in table X.

4.6.3.2.2 Failures. No failures shall be permitted (see 4.6.3.3).

4.6.3.2.3 Disposition of sample units. Sample units which have been subjected to group C inspection shall not be delivered on the contract or order.

4.6.3.3 Noncompliance. During group B or group C inspections, when a failure exceeds the allowable number of failures, the manufacturer shall notify the qualifying activity and the cognizant inspection activity of such failure within five working days. The manufacturer shall prepare to take corrective action on the materials or processes, or both, as warranted, and on all units of product which can be corrected and which were manufactured under essentially the same materials and processes, and which are considered subject to the same failure. Acceptance and shipment of the product shall be discontinued until corrective action, acceptable to the qualifying activity has been taken. After the corrective action has been taken, group B and group C inspections shall be repeated on additional sample units (all tests, or the tests which the original sample failed, at the option of the qualifying activity). Group A inspection may be reinstituted; however, final acceptance and shipment shall be withheld until the group B or group C inspection has shown that the corrective action was successful.

Downloaded from http://www.everyspec.com

TABLE X. Group C inspection.

Inspection	Requirement paragraph	Test method paragraph	Number of sample units for inspection
C1 (monthly) 5/			
Internal moisture (when specified)	3.33	4.7.27	
Intermediate current (when specified)	3.32	4.7.26	
Dielectric withstanding voltage	3.12	4.7.7	1
Insulation resistance	3.11	4.7.6	
Electrical characteristics	3.13	4.7.8	
Visual inspection (external)	3.1, 3.35, 3.37	4.7.1	
C2 (every 36 months)			
Low temperature operation	3.38	4.7.29	
Thermal shock	3.14	4.7.9	
Shock (specified pulse) 1/	3.15	4.7.10	
Vibration 1/	3.16	4.7.11	
Terminal strength	3.18	4.7.13	1
Dielectric withstanding voltage 2/	3.12	4.7.7	
Insulation resistance 2/	3.11	4.7.6	
Electrical characteristics 2/	3.13	4.7.8	
Visual inspection (external)	3.1, 3.35, 3.37	4.7.1	
Seal	3.10	4.7.5	
C3 (every 36 months)			
Mechanical interlock (when specified)	3.31	4.7.25	
Overload (highest ac or dc resistive load) 3/	3.24	4.7.19	
Life (highest rated dc, 50 percent of rated load)	3.28	4.7.22	
Dielectric withstanding voltage 2/	3.12	4.7.7	1
Insulation resistance 2/	3.11	4.7.6	
Electrical characteristics 2/	3.13	4.7.8	
Visual inspection (external)	3.1, 3.35, 3.37	4.7.1	
C4 (every 36 months)			
Salt spray/corrosion	3.19	4.7.14	
Acceleration (when specified)	3.17	4.7.12	
Resistance to soldering heat	3.9	4.7.4	
Resistance to solvents	3.29	4.7.23	
Dielectric withstanding voltage 2/	3.12	4.7.7	1
Insulation resistance 2/	3.11	4.7.6	
Electrical characteristics 2/	3.13	4.7.8	
Visual inspection (external)	3.1, 3.35, 3.37	4.7.1	
Seal	3.10	4.7.5	
C5 (every 36 months)			
Mechanical life	3.27	4.7.28	
Moisture resistance	3.21	4.7.16	1
Electrical characteristics	3.13	4.7.8	
Seal	3.10	4.7.5	
C6 (every 36 months)			
Time current relay characteristics (when specified)	3.26	4.7.21	
Dielectric withstanding voltage	3.12	4.7.7	1
Insulation resistance	3.11	4.7.6	
Electrical characteristics	3.13	4.7.8	
Seal	3.10	4.7.5	

See footnotes at end of table.

Downloaded from http://www.everyspec.com

TABLE X. Group C inspection - Continued.

Inspection	Requirement paragraph	Test method paragraph	Number of sample units for inspection
C7 (every 36 months)			
Sand and dust	3.20	4.7.15	
Dielectric withstanding voltage 2/	3.12	4.7.7	1
Insulation resistance 2/	3.11	4.7.6	
Electrical characteristics 2/	3.13	4.7.8	
C8 (every 36 months)			
Rupture 4/	3.25	4.7.20	
Dielectric withstanding voltage	3.12	4.7.7	1
Insulation resistance	3.11	4.7.6	
Seal	3.10	4.7.5	
C9 (every 36 months)			
Continuous current	3.30	4.7.24	
Dielectric withstanding voltage	3.12	4.7.7	
Insulation resistance	3.11	4.7.6	1
Electrical characteristics	3.13	4.7.8	
Visual inspection (external)	3.1, 3.35, 3.37	4.7.1	
Seal	3.10	4.7.5	

1/ Each mounting configuration to which a manufacturer is qualified will be represented during the normal continuous periodic testing period. It will usually take more than one periodic testing period to achieve testing of all of the applicable mountings.
2/ Testing sequence is optional for insulation resistance and dielectric withstanding voltage prior to electrical characteristics.
3/ Applicable to high level load ratings.
4/ Rupture testing loads and contacts shall be rotated every three years.
5/ Applicable to MIL-PRF-6106/12, MIL-PRF-6106/13, MIL-PRF-6106/19, MIL-PRF-6106/20, MIL-PRF-6106/38, MIL-PRF-6106/39, MIL-PRF-6106/40, and MS27742.

4.7 Methods of inspection.

4.7.1 Visual and mechanical. Relays shall be inspected to verify that the design, physical dimensions, and weight (see 3.1), materials (see 3.4), interface and construction (see 3.5), marking (see 3.5.10.4 and 3.34), header glass (see 3.37), and workmanship (see 3.39) are in accordance with the applicable requirements.

4.7.2 Run-in screening (when specified, see 3.7).

a. High temperature. For qualification inspection only, relays shall be subjected to +125°C with rated voltage or current on the coil circuit for one hour for nonlatching relays; for latching relays, one coil shall be energized for 30 minutes. At the end of this period, the pickup value (voltage), or latch and reset voltage, shall be measured to determine compliance to 3.1. For latching relays, repeat the test after the other coil has been energized for 30 minutes. For group A testing, relays shall be subjected to +125°C; the test chamber shall stabilize at +125°C after the specimens have been inserted into the test chamber. The test shall be performed with rated voltage or current on the coil for 15 minutes minimum for nonlatching relays weighing one ounce or less and 30 minutes minimum for relays weighing over one ounce. At the end of each period, the specified pickup value (voltage) shall be measured to determine compliance with 3.1. For latching relays, one of the two coils shall be energized with rated voltage or current for 7.5 minutes.

Downloaded from http://www.everyspec.com

b. Low temperature. Following high temperature, for qualification only, relays shall be subjected to -65°C with the coil or coils de-energized for one hour. For group A testing, relays shall be subjected to -65°C; the test chamber shall stabilize at -65°C after the specimens have been inserted into the test chamber. The test shall be performed with the coil or coils de-energized for fifteen minutes minimum for relays weighing one ounce or less and thirty minutes minimum for relays weighing over one ounce. At the end of either period, the specified dropout value (voltage) shall be measured to determine compliance with 3.1. For latching relays, dropout voltage measurement is not required. While at this temperature, the relays shall be subjected to a 2,500 cycle run-in test in accordance with the procedure outlined in 4.7.2a.

4.7.2.1 Cycling-rate. The cycle rate shall be a maximum of 0.1/(maximum operate time (seconds) plus maximum release time (seconds)) cycles per second where the operate and release times are those of the relay under test.

$$\text{Maximum cycle rate (cycles per second)} = \frac{0.1}{\text{Maximum operate time (seconds)} + \text{maximum release time (seconds)}}$$

For latching relays:

$$\text{Maximum cycle rate (cycles per second)} = \frac{0.1}{\text{2X maximum latch/reset time (seconds)}}$$

4.7.3 Solderability (when specified; see 3.1 and 3.8). Relays shall be tested in accordance with method 208 of MIL-STD-202. The following details and exceptions shall apply: All terminations of each part shall be tested (not applicable to mounting stud or threaded terminals).

4.7.4 Resistance to soldering heat (when specified; see 3.1 and 3.9). Relays shall be tested in accordance with method 210 of MIL-STD-202. The following details and exceptions shall apply:

a. Depth of immersion in molten solder: Within .060 inch ±.020 inch (1.52 mm ±0.51 mm) of the relay base.

b. Test condition: B.

c. Measurements after test: Insulation resistance (see 4.7.6), coil resistance (see 4.7.8.1); maximum coil current (see 4.7.8.2) when specified in 3.1, contact voltage drop (see 4.7.8.3), and specified pickup or latch/reset, hold, and dropout values (voltages) (see 4.7.8.4), shall be measured.

d. Examination after test: Relays shall be examined for evidence of structural failure or other damage which could impair the operation of the relay.

4.7.5 Seal (see 3.10). Relays shall be tested in accordance with 4.7.5.1 or 4.7.5.2, as applicable, or as approved by the qualifying activity. In case of dispute, method 1014 of MIL-STD-883, test condition B shall govern. Test condition B shall govern for relays sealed by welding and not fully rated at 25 amperes and below.

4.7.5.1 Relays sealed with a tracer gas. Relays sealed with a tracer gas shall be tested in accordance with method 112 of MIL-STD-202, or at the option of the manufacturer, method 1014 of MIL-STD-883. The following details shall apply: Method 112 of MIL-STD-202:

a. Test condition C, procedure IV. Relays shall be back-filled with a helium tracer gas (90 percent to 97 percent dry gas and 3 percent to 10 percent helium). For gross leak, silicone oil shall not be used.

b. Leakage rate sensitivity: 1×10^{-8} atm cm^3/s of air.

c. Measurements after test: Not applicable.

d. Method 1014 of MIL-STD-883, test condition B (gross leak test not required).

Downloaded from http://www.everyspec.com

4.7.5.2 Relays sealed without a tracer gas. Relays sealed without a tracer gas shall be tested in accordance with method 1014 of MIL-STD-883. At the option of the manufacturer, 4.7.5.2a or 4.7.5.2b may be used. The following details shall apply:

a. Method 1014 MIL-STD-883:

(1) Test condition A1 or A2.

(2) Measurements after test: Perform a gross leak test in accordance with method 112 of MIL-STD-202, test condition A, condition B, or condition D. Silicone oil shall not be used. At the option of the manufacturer, the gross leak test of method 1014 of MIL-STD-883, test condition C, may be used.

b. Method 1014 of MIL-STD-883, test condition B (gross leak test not required).

4.7.5.3 Radioisotope dry gross leak test (optional). This test shall be used only to test devices that internally contain some krypton-85 absorbing medium, such as electrical insulation, organic, or molecular sieve material. This test shall be permitted only if the following requirements are met:

a. A .005 inch (0.127 mm) to .010 inch (0.254 mm) diameter hole shall be made in a representative unit of the device to be tested. (This is a one-time test that remains in effect until a design change is made in the relay's internal construction.)

b. The device shall be subjected to this test condition. If the device exhibits a hard failure, this test condition may be used for those devices represented by the test unit. If the device does not fail, this test shall not be used and instead a +125°C fluorocarbon gross leak shall be performed in accordance with method 112 of MIL-STD-202, test condition D, except the specimen shall be observed from the instant of immersion for 1 minute minimum to 3 minutes maximum.

4.7.6 Insulation resistance (see 3.11). The insulation resistance of the component shall be measured between all mutually insulated terminals and between all terminals and the case in accordance with method 302 of MIL-STD-202, test condition B. The relative humidity shall be 30 percent to 50 percent. This shall be done with the relay in both the de-energized and energized positions. It is permissible to perform the insulation resistance test when the humidity is above 50 percent, but in the event of failure, the device shall be checked at 30 percent to 50 percent relative humidity prior to rejection.

4.7.7 Dielectric withstanding voltage (see 3.12). Relays shall be tested as specified in 4.7.7.1 and in accordance with 4.7.7.2. Testing in accordance with 4.7.7.2 is not applicable to group A, group B, group C1, group C4, group C6, and group C7.

4.7.7.1 At atmospheric pressure. Relays shall be tested in accordance with method 301 of MIL-STD-202. The following details shall apply:

a. Points of application and magnitude of test voltage: As shown in table IV.

b. Maximum leakage current: 1 mA. For group A, leakage current measuring device shall be capable of measuring the leakage current to an accuracy of at least 10 percent.

c. Duration of application: 60 seconds minimum for qualification and group B and group C tests; 2 seconds minimum to 5 seconds maximum for group A tests.

d. Attributes data is acceptable.

4.7.7.2 At high temperature, high altitude pressure (see 3.12.1). Relays shall be tested in accordance with method 105 of MIL-STD-202.

a. Method of mounting: Normal mounting means.

b. Test condition: Test condition C.

Downloaded from http://www.everyspec.com

c. Tests during subjection to reduced pressure: As specified in points of application in table IV, except test voltage shall be 350 volts.

d. Duration of application: 60 seconds minimum for qualification and group C tests.

e. Attributes data is acceptable.

4.7.8 Electrical characteristics (see 3.13).

4.7.8.1 Coil resistance (not applicable to ac coils) (see 3.13.1). Relay coils shall be tested in accordance with method 303 of MIL-STD-202 (see 6.9 for optional temperature conversion formula).

4.7.8.2 Maximum coil current (applicable to dc coils when specified and to all ac coils) (see 3.13.2). When rated voltage is applied to the coil terminals, the current must be within the limits as specified (see 3.1). Apply rated voltage for 5 seconds maximum.

4.7.8.3 Static contact resistance or contact voltage drop (see 3.13.3). The static contact resistance or contact voltage drop shall be required for each pair of contacts. If both contact voltage drop and static contact resistance are specified in the documents the manufacturer has the choice of which to run for the contacts. However, each contact must be tested.

4.7.8.3.1 Static contact resistance (see 3.13.3). Relays shall be tested in accordance with method 307 of MIL-STD-202. The following details and expectations shall apply:

a. Method of connection: The point of measurement shall be on leads external to the case. Suitable jigs and fixtures shall be used.

b. Test load: Test current shall be 100 mA at a voltage equal to or below rated voltage, except those rated for low level. See 6.1.1 for low level voltage rating. For low level, the current shall be 10mA maximum (dc or peak ac).

c. Post test current: Unless life tests are specified in the grouping, load current and voltage shall be 100 mA maximum at a voltage equal or below rated voltage. When life tests are specified in the grouping, the same current at a maximum of rated voltage as the life test, or 100 mA maximum at 28 V dc maximum, shall be used.

d. Points of measurement:

(1) Between all normally closed mated contacts.

(2) Between all normally open mated contacts, with the coil energized with rated coil voltage (or current) for non-latch type relays, or in the latch/reset position for magnetic latch type relays, with or without coil energized.

e. Number of activations prior to measurement. During static resistance tests, the number of activation prior to measurement is none.

f. Number of test activations: Maximum of three activations in each closed contact position for qualification Q1. For all remaining groups in the qualification table, group A, group B, and group C, one activation in each closed contact position.

g. Number of measurements per activations: One in each closed contact position. The readings shall be taken after the circuit has stabilized and within a maximum time of 10 seconds after activation.

4.7.8.3.2 Contact voltage drop (see 3.13.3). Relays shall be tested in accordance with method 307 of MIL-STD-202. The following details and exception shall apply:

Downloaded from http://www.everyspec.com

a. Method of connection: The point of measurement shall be on leads external to the case. Suitable jigs and fixtures shall be used.

b. Test load: Test current shall be rated resistive current at rated voltage or less. See 6.1.1 for low level voltage rating. If a lower test current is used, the millivolt drop shall be adjusted according to Ohm's law.

c. Post test loads for intermediate current and life: When intermediate current is specified in the grouping, the same current as intermediate current, or 100 mA, at a voltage equal to or below rated voltage shall be used. When life tests are specified in the grouping, the same current as the high level life test, or 100 mA, at a voltage equal to or below rated voltage shall be used. If a lower test current is used, the millivolt drop shall be adjusted according to Ohm's law.

d. Points of measurement:

(1) Between all normally closed mated contacts.

(2) Between all normally open mated contacts, with the coil energized with rated coil voltage (or current) for non-latch type relays, or in the latch/reset position for magnetic latch type relays, with or without coil energized.

e. Number of activations prior to measurement: During contact voltage drop tests, the number of activations prior to measurement is none.

f. Number of test activations: Maximum of three activations in each closed contact position for qualification Q1. For all remaining groups in the qualification table, group A, group B, and group C, one activation in each closed contact position.

g. Number of measurements per activation: One in each closed contact position. The readings shall be taken after the circuit has stabilized and within a maximum time of 10 seconds after activation.

4.7.8.4 Specified pickup or latch/reset, hold, and dropout values (voltages) (see 3.13.4). Specified pickup or latch/reset, hold, and dropout values (voltage) shall be measured as specified in 4.7.8.4.1, 4.7.8.4.2, 4.7.8.4.3, or 4.7.8.4.4. Unless otherwise specified (see 3.1), for qualification inspection, the relay shall be mounted in each of three mutually perpendicular planes. For in-process, conformance, and periodic inspections, the relay mounting position is optional. A suitable indicating device shall be used to monitor contact position. During the test, all contacts shall not change state (break or remake) when the coil is energized at or above the specified pickup or latch/reset value (voltage); when the coil voltage is lowered to any value at or above specified hold value (voltage); or when the coil voltage is reduced from the specified dropout value (voltage) to zero. It is permissible to perform specified pickup or latch/reset, hold, and dropout values (voltages) using step function voltage changes as specified in 4.7.8.4.1 or 4.7.8.4.2, 4.7.8.4.3, and 4.7.8.4.4. Due to the fact that slow ramping will overheat relay coils and vary specified pickup or latch/reset, hold, and dropout values (voltages), the step function method shall be the governing method in cases of dispute. For qualification and group C inspections testing, specified pickup or latch/reset, hold, and dropout values (voltages) shall be measured at minimum, ambient, and maximum temperatures specified (see 3.1). Following group B and group C3 and group C5 testing, the over the temperature range values for specified pickup, hold, and dropout shall apply at ambient temperature.

4.7.8.4.1 Specified pickup value (voltage) (not applicable to latching relays). The voltage shall be increased from zero until the relay operates, and the specified pickup value (voltage) shall be measured. It is permissible to perform specified pickup value (voltage) using a step function voltage change as follows and as illustrated on figure 6. In addition to step function changes in voltage levels as depicted on figure 6, rapid voltage ramps, rapidly increasing small incremental steps and combination of step functions and ramps may be used to achieve the specified pickup, hold, and dropout values (voltages) sequencing.

a. Step up to the specified pickup value (voltage), contacts shall have transferred and all normally open contacts shall be made.

b. Apply rated coil voltage.

Downloaded from http://www.everyspec.com

c. Step down to specified hold value (voltage). Normally open contacts shall still be making.

d. Step down to specified dropout value (voltage). All contacts shall have transferred and all normally closed contacts shall be making.

e. Step down to zero voltage.

4.7.8.4.2 Specified latch/reset value (voltage) (applicable to latching relays only). Before measuring the specified pickup value (voltage), establish that all contacts are in their last energized mode for latching relays (see 3.1). If not, apply rated voltage to establish last energized position. Gradually increase the voltage to the latching coil until the contacts transfer and the specified operate (latch) value (voltage) shall be measured. Apply rated latching voltage and reduce to zero. Gradually increase the voltage to the reset coil until the contacts transfer and the specified pickup (reset) value (voltage) shall be measured. It is permissible to perform maximum pickup (latch/reset) value (voltage) using a step function as follows and as illustrated on figure 6.

a. Step up to specified latch value (voltage) for latching relay. The contacts shall have transferred to the latch position.

b. Step up to rated voltage and then step down to zero.

c. Step up to specified reset value (voltage) for latching relays. The contacts shall have transferred to reset position.

d. Step up to rated voltage and then step down to zero.

4.7.8.4.3 Specified hold value (voltage) (not applicable to latching relays). Rated voltage shall be applied to the coil. The voltage shall then be reduced to the specified hold value (voltage) (see 3.1 and 6.11). All contacts shall not change state. It is permissible to perform this test using the step function voltage program described in 4.7.8.4.1 and on figure 6.

4.7.8.4.4 Specified dropout value (voltage) (not applicable to latching relays). Rated voltage shall be applied to the coil. The voltage shall then be gradually reduced until all contacts return to the de-energized position and the specified dropout value (voltage) shall be measured. It is permissible to perform this test using the step function voltage program described in 4.7.8.4.1 and on figure 6.

4.7.8.5 Operate and release time (see 3.13.5). Operate and release time shall be measured using an oscilloscope or other acceptable means approved by the qualifying activity. Rated voltage shall be applied to the coil. Contact load conditions shall be 28 V dc maximum or peak ac at 100 mA maximum. For relays rated for low level applications; the contact load shall be 10 mA maximum at 6 V dc maximum. The circuit shown on figure 7, or equivalent, shall be used. The operate and release time shall be exclusive of contact bounce or contact stabilization time. Timing measurements shall be made on all contact sets. Release time is not applicable to latching relays. Electronic instrumentation or other suitable means may be used for group A inspection. Determination of compliance to the simultaneously switching requirement shall be made by comparing the highest time to the lowest time of the poles as measured for operate and release time. The procedure for measurement shall be approved by the qualifying activity.

4.7.8.5.1 Break before make (see 3.13.5.1). The circuit shown on figure 8 or an equivalent circuit approved by the qualifying activity shall be used to monitor contact position.

Downloaded from http://www.everyspec.com

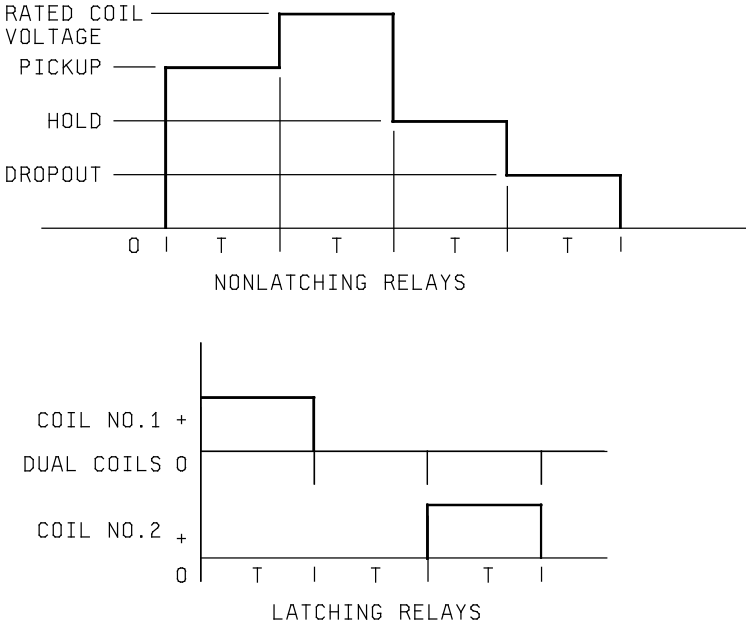

FIGURE 6. Pickup or latch / reset, hold, and dropout sequencing.

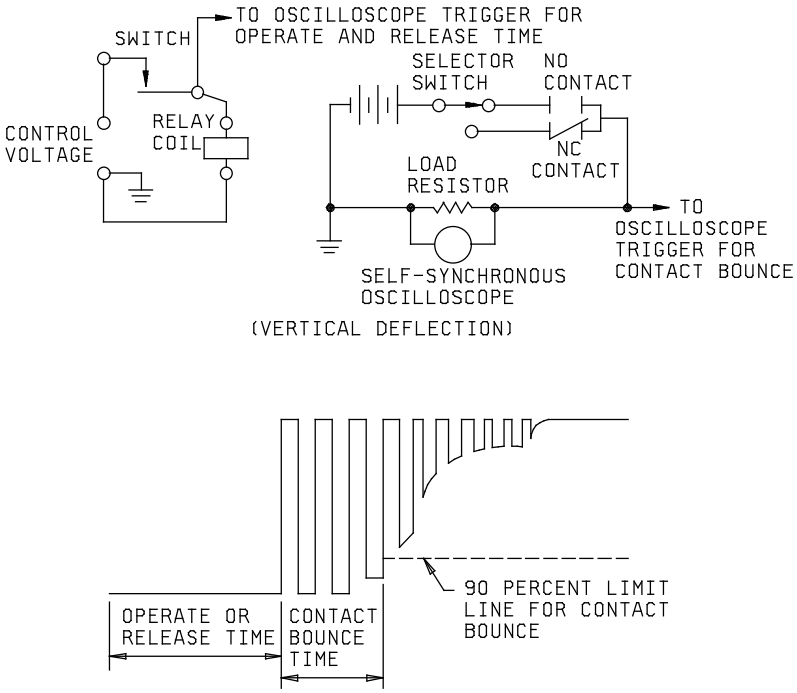

FIGURE 7. Typical circuit for operate and release time and contact bounce with typical traces.

Downloaded from http://www.everyspec.com

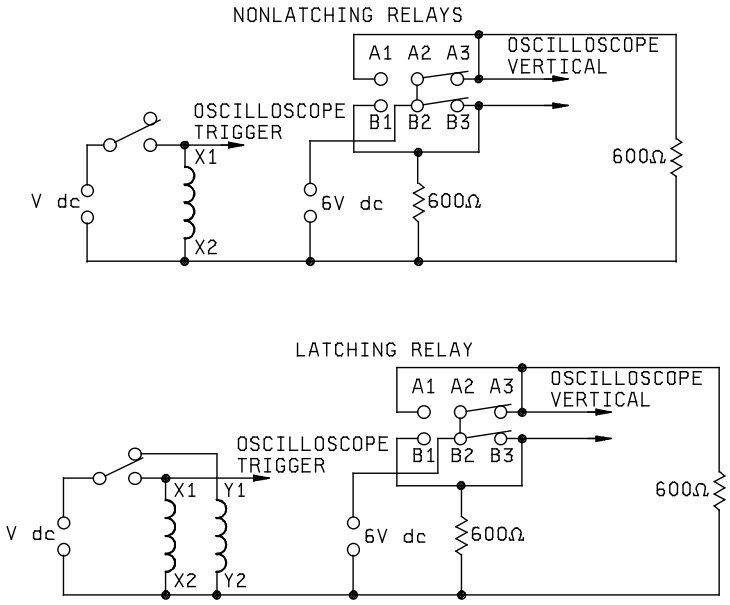

FIGURE 8. Typical break before make test circuits.

4.7.8.6 Contact bounce (see 3.13.6). Contact bounce shall be measured on each contact set using an oscilloscope or other acceptable means approved by the qualifying activity. The trace shall show contact switching at operate and release and appropriate timing markers when using an oscilloscope. Rated voltage shall be applied to the coil. Contact load conditions shall be 28 V dc maximum or peak ac at 100 mA maximum. For relays rated for low level applications, the contact load shall be 10 mA at 6 V dc maximum. A contact bounce shall be considered any occurrence equal to or greater than 90 percent of the open circuit voltage with a pulse width of 10 µs or greater. The circuit shown on figure 7, or equivalent, shall be used.

4.7.8.7 Coil transient suppression (applicable to dc operated relays with internal coil suppression) (see 3.13.7). The coil shall be connected as shown on figure 9 or by an equivalent test circuit and tested as specified below.

NOTE: Voltage greater than the maximum specified may damage the coil transient suppression device.

a. The switching relay shall be a mercury wetted contact switching relay or a solid state relay without any built-in transient suppression function. E is rated operating voltage for the relay under test. The switching relay is operated from a source voltage independent of E. The oscilloscope shall have a rise time of 20 nanoseconds or less. The horizontal (time) deflection scale shall be set at 0.5 ms to 1 ms per division (0.5 ms/cm to 1 ms/cm), and the vertical (voltage) defection to such that the vertical gain provided accuracy in reading. Example: 5 V/cm for a 12 V back EMF limit, or 10 V/cm for a 24 V back EMF limit. Both horizontal (time) and vertical (voltage) deflection traces shall be of a calibrated grid spacing (cm or mm).

b. The source, E, shall be a low impedance source capable of delivering the rated coil voltage with no limiting resistor or potentiometer used to regulate the line voltage. (Having low source impedance representing a typical application is more important than having the exact rated voltage.)

c. The switching relay shall be closed for a minimum of ten times the operate time of the test relay, or switching relay whichever is longer, to allow the oscilloscope and circuit network to stabilize and then opened to obtain the induced voltage deflection trace. Relay shall be cycled with approximately equal open and closed times.

(1) The reading shall be observed on the oscilloscope or other equivalent electronic test instrumentation. The magnitude of the induced voltage transient shall be noted. A typical trace is presented on figure 10.

Downloaded from http://www.everyspec.com

(2) The maximum value of three consecutive readings shall be noted.

(3) Unless otherwise specified, the temperature at the time of the testing shall be +25°C ±5°C or group A testing.

d. For group A testing, only one measurement and other suitable tests methods may be used to verify that the back EMF (coil kick) is within the specified limit.

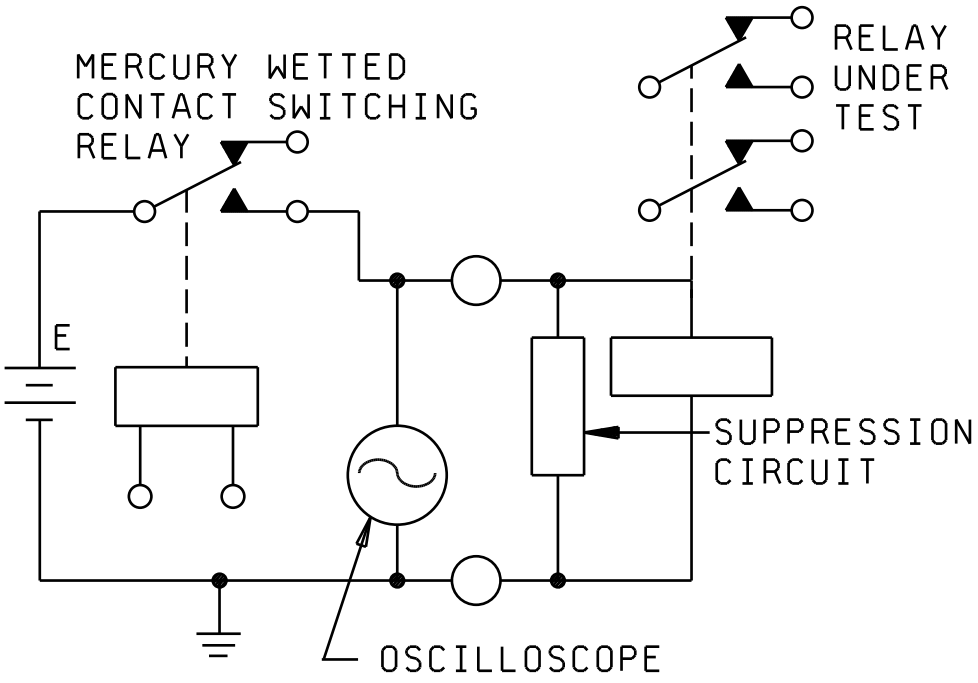

NOTE: Voltage greater than the maximum specified may damage the coil suppression device.

FIGURE 9. Coil transient suppression test circuit.

Downloaded from http://www.everyspec.com

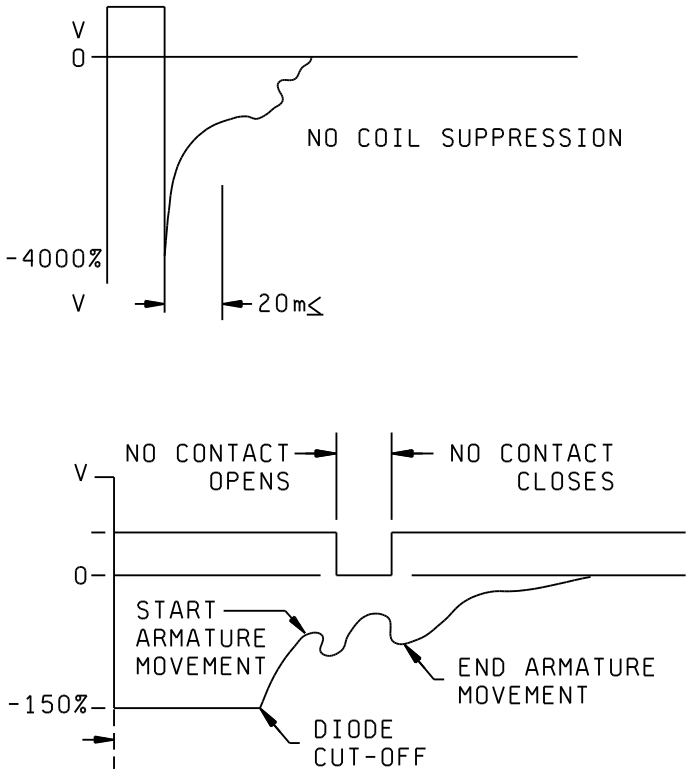

FIGURE 10. Typical transient voltage.

4.7.8.8 Neutral screen (applicable to latching relays only) (see 3.13.8). Relays shall be tested as follows:

a. Apply rated coil voltage to both coils simultaneously for a period of 10 ms minimum. After voltage is removed, determine if the relay contacts are in the neutral position.

b. If the relay contacts will not maintain a neutral position, repeat step 4.7.8.8a. twice. A relay which will not assume a neutral position for theses three successive cycles is considered an acceptable part and does not require further testing. Relays which remain in a neutral position shall be tested as follows:

(1) Apply a 10 ms ±1 ms pulse of the maximum allowable (at +25°C) latch voltage to the latch coil. Verify that the relay has latched. Failure to latch shall be cause for rejection.

(2) Repeat step 4.7.8.8a. above.

(3) Apply a 10 ms ±1 ms pulse of the maximum allowable (at 25°C) reset voltage to the reset coil. Verify that the relay has reset. Failure to reset shall be cause for rejection.

Downloaded from http://www.everyspec.com

4.7.9 Thermal shock (see 3.14). Relays shall be tested in accordance with method 107 of MIL-STD-202, test condition B, for the relay temperature range specified (see 3.1). The following details shall apply: Measurements after cycling: Relays shall be visually examined for breaking, cracking, chipping, or flaking of the finish or loosening of the terminals.

4.7.10 Shock (specified pulse) (see 3.15). Unless otherwise specified (see 3.1), relays shall be tested in accordance with method 213 of MIL-STD-202. Unless otherwise specified, the waveform shall be 1/2 sine. The following details and exceptions shall apply:

a. Mounting method: For relays having flanges or studs, mounting shall be by the flanges or studs; and for relays without flanges, mounting shall be by plugging into sockets, or other suitable means approved by the qualifying activity.

b. Test condition: Test condition A, condition B, or condition C, as applicable (see 3.1).

c. Electrical load conditions: In each direction of shock, the coil shall be de-energized during two shocks and energized with rated voltage during one shock.

d. For latching relays: In each direction there shall be two pulses in the latch position and two pulses in the reset position, with no coil voltage being applied during these pulses.

e. Measurements during shock: Contacts shall be monitored with an adequate test circuit as approved by the qualifying activity. Unless otherwise specified (see 3.1), the test circuit shall verify that no opening of closed contacts in excess of 10 μs and no false closure or bridging of open contacts occurs in excess of 1 μs. The contact load shall be 100 mA maximum at 28 V dc maximum (dc or peak ac).

f. Examination after test: As specified in 4.7.4d.

4.7.11 Vibration (see 3.16).

4.7.11.1 Vibration (sinusoidal). Vibration tests shall be performed in accordance with the requirements specified (see 3.1 and figure 11). The high temperature shall be the maximum high temperature specified for the relay being tested. Low temperature shall be as specified (see 3.1). When vibrating intermittent duty, type III relays, in the energized position, the coil voltage shall be reduced to a level that will prevent overheating and subsequent damage to the relay's insulation system.

a. Test installation: The relay shall be rigidly attached to the vibrator table, either directly or with an adapter of sufficient rigidity to be non-resonant in the test frequency range. If necessary, an independent frequency scan shall be conducted on an adapter with a suitable dummy load in lieu of the relay to determine whether the adapter has resonances in the test frequency range. The test configuration shall be such that the rotational motion of the vibrator table or adapter bracket is not induced owing to any unsymmetrical weight or stiffness distribution of the component.

b. Amplitude measurement: Measurements of vibratory accelerations or amplitudes shall be made at the mounting base of the components. If the vibratory accelerations is increased by its own resonances, then this response or acceleration shall not be considered as part of the applied vibration. This means of measuring vibratory amplitudes of acceleration shall not be considered as part of the applied vibration. This means of measuring vibratory amplitudes or acceleration must provide a clear distinction between the applied vibration and the response to the vibration of the relay assembly.

c. Frequency measurements: All frequency measurements shall be accurate within ±5 percent. All amplitude or acceleration measurements shall be accurate within ±10 percent. The motion of the vibrator table shall be a simple harmonic motion with not more than 10 percent distortion. Distortion of the table motion caused by the operation or response of the component itself shall not be considered part of the distortion of the driving motion.

d. Contact disturbance: Contact disturbance shall be detected by a circuit, similar to that shown on figure 7. Multiple open contacts shall be connected in parallel, and multiple closed contacts shall be connected in series

Downloaded from http://www.everyspec.com

during testing. An optional test procedure may be the contact chatter indicator in method 310 of MIL-STD-202.

e. Voltage: The test voltage shall be 35 volts maximum with a series non-inductive resistor of suitable substance to limit the closed circuit current to some value between 5 mA and 10 mA for relays not fully rated at 25 amperes. For relays fully rated at 25 amperes and above, the value shall be a maximum of 100 mA. The indicator shall be an oscilloscope with high input impedance and a bandwidth of 1 megahertz, or greater.

f. Frequency scan: The relay shall be vibrated first in the energized and then in the de-energized position along each of the three mutually perpendicular axes for resonance under the conditions defined (see 3.1). Frequency scan shall be conducted slowly and carefully. The frequency range shall be broken into small convenient intervals, and each interval scanned at a constant applied acceleration or amplitude which produces approximately the table amplitude or acceleration defined by the applicable test curve. The table amplitude or acceleration shall be observed closely during the frequency scans to detect frequencies of minimum table motion which define some of the frequencies at which maximum component amplitude or noises occur when scanning at constant applied force amplitude. When the resonant components are small, the reduction of the table motion at resonance may not be discernible, in which case the resonant frequencies may be determined for observation of maximum amplitudes, noises, or changes in performance such as contact disturbance. In all cases, the resonant frequencies shall be verified, if possible, by checking for minimum table motion.

g. Resonance endurance: After completion of the frequency scanning, resonance endurance tests shall be conducted as specified (see 3.1), modified as follows: The duration of the test shall be one million cycles or 8 hours, whichever occurs first. A separate test shall be performed for each resonance found in the frequency scan specified in 4.7.11.1f; the test time shall not be divided between resonances. Separate resonance endurance tests may be performed on separate relays, if the resonance is common to more than one sample. The specimen shall be vibrated for 15 minutes at the specified maximum temperature and 15 minutes at the specified minimum temperature. The relay shall be stabilized at the maximum and minimum temperature before conducting resonance endurance tests at these temperatures. If total time at resonance is less than 30 minutes, the time shall be divided equally between high and low temperatures. Vibrations shall be continued at room temperatures for the duration of the test. The resonance endurance time shall be divided equally between vibration with the relay coil in the energized and the de-energized conditions. For type III relays, the coil shall be energized for 3 minutes at the end of each temperature level of the cycle. Endurance tests shall not be conducting at any frequency at which the table amplitude abruptly increases when scanning at constant applied force amplitude. If a change in resonant frequency occurs during testing or owing to change in test temperature, the frequency of vibration shall be adjusted to follow the resonance. However, if a large or abrupt resonance frequency shift occur, the item shall be examined for structural failure or excessive wear.

h. Cycling endurance: The relay shall be cycled for 30 minutes at maximum and 30 minutes at minimum rated ambient temperature. The relay shall be in the energized position for the first half of each test period. During the other half, the relay shall be de-energized. The frequency shall be cycled for 15 minute periods between the frequency limits and at the vibration levels specified on figure 11 for the class of relay being tested. The rate of change of frequency shall be logarithmic. Where there is no provision for logarithmic cycling, a linear rate of frequency may be used. The cycling test may be broken into convenient frequency ranges, provided cycling rates and test times for each range are not changed.

Downloaded from http://www.everyspec.com

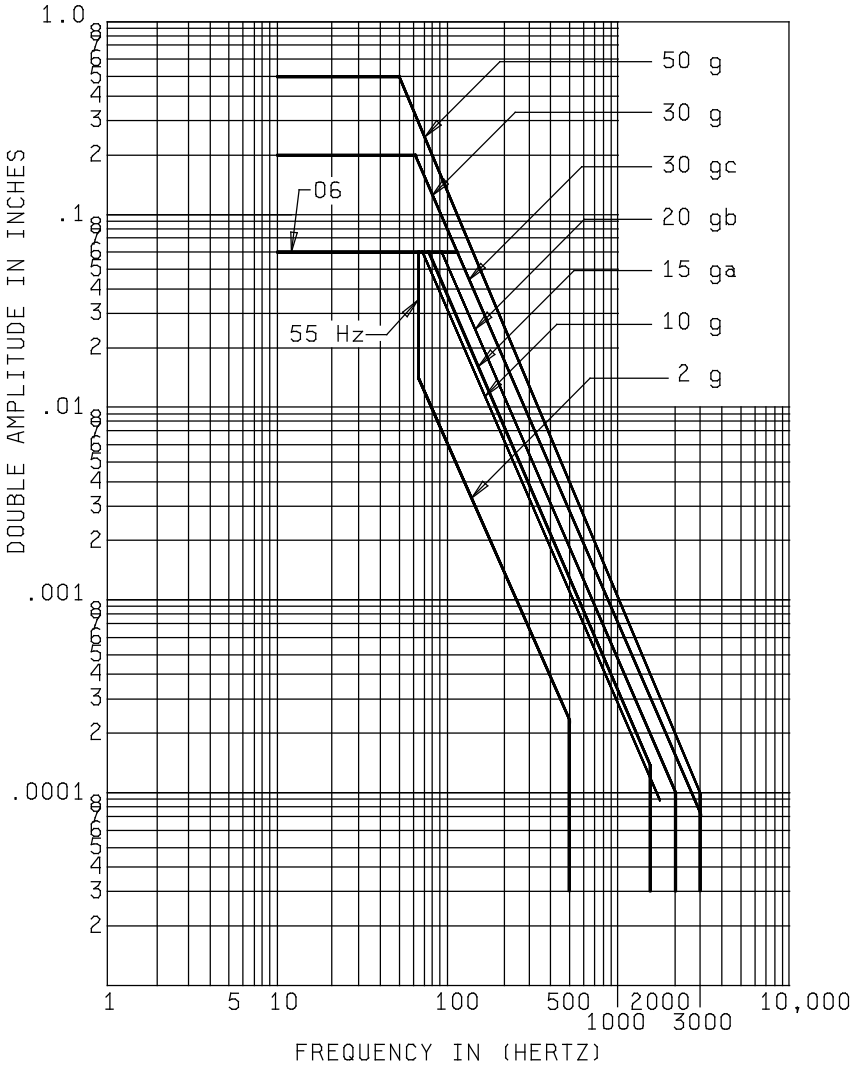

FIGURE 11. Range curve for sinusoidal vibration tests.

4.7.11.2 Vibration (random). Unless otherwise specified, relays shall be tested in accordance with method 214 of MIL-STD-202. The following details and exceptions shall apply:

a. Mounting method: As specified in 4.7.10a.

b. Electrical load conditions: Relays shall be tested with the coil energized at rated voltage for 7 minutes, 30 seconds and with the coil de-energized for 7 minutes, 30 seconds, in each of three mutually perpendicular (x, y, and z) axes. Latching relays shall be tested with the coils de-energized; 7 minutes, 30 seconds with the latch coil last energized and 7 minutes, 30 seconds with the reset coil last energized. When applicable to group A inspection, the test time shall be 3 minutes for each state described above.

c. Test condition: Unless otherwise specified (see 3.1), test condition IG (0.4 G^2/Hz, 23.91 rms G).

d. Measurements during vibration: As specified in 4.7.10e.

Downloaded from http://www.everyspec.com

e. Examination after test: As specified in 4.7.4d.

4.7.11.3 Group A inspection, vibration (sinusoidal). Unless otherwise specified (see 3.1), for group A testing, only one cycle shall be performed over the frequency range of 100 Hz to 3,000 Hz. The relay shall be vibrated in the direction of contact motion. At the option of the manufacturer, the relay production lot may be divided in three equal groups and each group shall be tested in one of three mutually perpendicular axes (x, y, and z). When relays are tested as specified in the optional procedure, a failure of any relay in any axis shall require 100 percent inspection of all relays in the production lot in each axis. The cycle shall consist of 3 minutes with the coil de-energized and 3 minutes with the coil energized. Latching relays shall remain in each latched position with no voltage applied to the coils 3 minutes in the latch position and 3 minutes in the reset position.

4.7.12 Acceleration (when specified, see 3.1 and 3.17). Relays shall be tested in accordance with method 212 of MIL-STD-202. The following detail and exceptions shall apply:

a. Mounting method: As specified in 4.7.10a.

b. Test conditions: Unless otherwise specified (see 3.1), rest condition A, 15 G's. (Acceleration shall be applied in each direction along three mutually perpendicular axes of the specimen. One axis shall be in the direction most likely to cause malfunction.) In each direction, the coil shall be de-energized for 5 minutes, rated coil voltage shall be momentarily applied; and the voltage shall be reduced to the maximum ambient pickup voltage as specified (see 3.1) for 5 minutes. Latching relays shall remain in each latched position with no voltage applied to the coils. Contacts shall be monitored for proper position.

c. Measurements during acceleration: As specified in 4.7.10e.

d. Examination after test: As specified in 4.7.4d.

4.7.13 Strength of terminals and mounting studs (see 3.18).

4.7.13.1 Strength of threaded terminals and mounting studs (see 3.18.1). Relays having mounting studs or threaded terminals shall be tested to determine compliance with the strength requirements specified in 3.18.1 and tables I and II. One terminal and one mounting stud, as applicable, shall be tested. The specified pull force shall be applied both coaxially with the threaded terminal in a direction away from the main body of the relay, and again normal to the threaded axis of the terminal in approximately the same plane as the seat for the terminal lug. The specified torque shall be applied to the terminal mounting nut or screw with all terminal mounting hardware, including one terminal lug of proper size, assembled in proper order. The relays shall withstand the specified forces for one minute without damage. Relays with threaded terminal assemblies soldered in place shall be tested as follows (not applicable to relays with maximum temperature rating above 125°C). The relay and torque fixture shall be stabilized in a 180°C ambient temperature. After stabilizing at this temperature for at least two hours, the unit may be removed from the chamber and one terminal and one mounting stud, as applicable, shall be subjected to the pull and torque test specified above within three minutes. If more than three minutes transpire before the terminals are tested after removal from the stabilization chamber, the device must be restabilized at 180°C for a period of 30 minutes minimum.

4.7.13.2 Strength of solder, plug-in, and wire-lead terminals (see 3.18.2).

4.7.13.2.1 Solder terminals, .047 inch (1.19 mm) diameter or less. Each terminal shall be twisted 90 degrees ±10 degrees clockwise. The twisting force shall be applied at the point where connections would normally be made. Following the twist test, the applicable pull force specified in table XI shall be applied to each terminal at the point where connections would normally be made. The pull shall be applied in any one direction 45 degrees ±5 degrees from the normal axis of the terminal for 15 seconds to 30 seconds. Terminals shall be returned to their normal position.

Downloaded from http://www.everyspec.com

TABLE XI. Pull force.

Terminal diameter		Pull force
Inches	Millimeters	(pounds)
.035- .047	0.89 - 1.19	5 ±0.5
.023- .0349	0.58- 0.886	3 ±0.3
Less than .023	Less than 0.58	2 ±0.2

4.7.13.2.2 Plug-in terminals, .047 inch (1.19 mm) diameter or less. Each terminal shall be bent 20 degrees to 30 degrees in both directions from the normal axis in a given plane and, after returning it to normal, the terminal shall be bent 20 degrees to 30 degrees in both directions perpendicular to the previous plane. The terminals shall be returned to their normal positions. Following the bend test, the applicable pull force specified in table XI shall be applied to each terminal for a period of 15 seconds to 30 seconds.

4.7.13.2.3 Solder and plug-in terminals greater than .047 inch (1.19 mm) diameter. A pull force of 10 pounds ±1 pound shall be applied from the normal axis of the terminal for 15 seconds to 30 seconds. The force shall be applied to solder terminals at the point where connections would normally be made, or to plug-in terminals in the last one-fourth of length.

4.7.14 Salt spray/corrosion (see 3.19). Relays shall be tested as specified in 4.7.14.1 or 4.7.14.2 when specified (see 3.1).

4.7.14.1 Salt spray. Relays shall be tested in accordance with method 101 of MIL-STD-202. The following details and exceptions shall apply:

a. Applicable salt solution: 5 percent.

b. Test condition: B.

c. Examination after test: Relays shall be examined for evidence of peeling, chipping, blistering of the finish, and exposure of base metal due to corrosion that can adversely affect the operation or performance of the relay.

4.7.14.2 Salt atmosphere (corrosion), MIL-STD-750 (when specified, see 3.1). Relays shall be tested in accordance with method 1041 of MIL-STD-750. The following detail shall apply. Examination after test: As specified in 4.7.14.1c.

4.7.15 Sand and dust (applicable to unsealed relays) (see 3.20). Relays shall be tested in accordance with method 110 of MIL-STD-202. The following details and exceptions apply:

a. Procedure: Step 1, step 3, and step 4, except that when the temperature is raised and maintained for six hours, the temperature to which it is raised shall be the maximum specified for the tested relay. The sand and dust velocity through the test chamber shall be between 100 feet and 500 feet per minute.

b. Measurements: See table VII.

4.7.16 Moisture resistance (applicable to unsealed, environmentally sealed, and hermetically sealed with potted solder pins; see 3.5.3 and 3.21). Relays with MS20659 or MS25036 terminal lugs, attached when applicable, shall be subjected to humidity test in accordance with method 106 of MIL-STD-202, except the temperature in step six shall be raised to 71°C. The following details and exceptions shall apply:

a. Mounting: On a corrosion-resistant panel by normal mounting means.

b. Initial measurement: Not applicable.

Downloaded from http://www.everyspec.com

c. Polarization: During step 1 through step 6, 150 V rms shall be applied between terminals and other exposed metal parts of unsealed relays. The current leakage shall not exceed 100 mA at any time. During step 1 through step 6, 100 V dc shall be applied between the coil and case, frame, or enclosure. Steps 7.a. and 7.b. are not applicable.

d. Final measurement: Upon completion of step 6 of the final cycle, the relay shall meet the requirements of 3.21.

e. Examination after test: Relays shall be examined for evidence of breaking, cracking, chipping, and loosening of terminals.

4.7.17 Ozone (applicable to unsealed, environmentally sealed, and hermetically sealed relays with potted solder pins) (see 3.22). The relay shall be placed in an enclosure and subjected for a period of two hours at room temperature to ozone having a concentration of from 0.010 percent to 0.015 percent by volume. At the end of the test period, the sample shall be examined for signs of ozone deterioration. A satisfactory method of producing and testing the required ozone concentration is described in ASTM D470.

4.7.18 Explosion proof (applicable to unsealed relays) (see 3.23). Relays shall be tested in accordance with method 109 of MIL-STD-202, modified as follows: The temperature of the ambient explosive mixture and of the equipment shall be maintained at the maximum temperature specified for the relay. At least five tests for internal explosions shall be accomplished at each 0.50 percent mixture increment from three percent to six percent (by volume) of commercial butane, using dry air in establishing the mixture. The spark may be obtained by operating at rated inductive load. Tests at altitude conditions are not required.

4.7.19 Overload (see 3.24). The contacts of the relay shall be caused to make and break the overload values and durations as shown in table XII for 50 operations at each of the maximum system voltage (open circuit) ratings. For double-throw relays, separate tests shall be performed for the normally open and for the normally closed contacts. Each relay case shall be connected to system ground through a single normal-blow fuse rated at the greater of 100 mA or five percent of load current. Unless otherwise specified, (see 3.1), the monitoring equipment shall automatically hold the relay under test in the state in which the failure occurs (energizes or de-energized), and the contact voltage shall be removed. All contacts in each sample switch identical loads. Following cycling, the electrical continuity of each case-grounding fuse shall be checked. As an alternative to the above, all failure indications shall be considered failures.

TABLE XII. Overload values and durations.

Relay rating Amperes	Percent rated resistive load			Duty cycle (seconds)	
	28 V dc	115 V ac	115/200 V ac (3 phase)	On ±.05	Off ±1
0 - 24	400	400	600	0.2	20
25 and up	800	800	800	0.2	20
All (type III)	800	800	800	0.2	20

4.7.20 Rupture (see 3.25). The relay shall be made to make and break its rated rupture current at each of the maximum system voltage (open circuit) ratings, for a minimum of 50 cycles using the values of current and cycling time in table XIII. For double-throw relays, separate tests shall be performed for the normally closed and normally open contacts. For those relays with both ac and dc ratings, ac and dc rupture tests shall be performed on separate samples at highest system voltage (open circuit) as specified (see 3.1). Each relay case shall be connected to system ground through a single normal-blow fuse rated at the greater of 100 mA or five percent of load current. The monitoring equipment shall automatically hold the relay under test in the state in which the failure occurs (energized or de-energized), and the contact voltage shall be removed unless otherwise specified. All contacts in each sample shall switch identical loads. Following cycling, the electrical continuity of each case-grounding fuse shall be checked. As an alternative to the above, all failure indications shall be considered failures.

Downloaded from http://www.everyspec.com

TABLE XIII. Rupture values and durations.

Relay resistive rating (amperes)	Percent rated resistive load			Duty cycle (seconds)	
	28 V dc	115 V ac	115/200 V ac (3 phase)	On ±0.05	Off ±1
10 and under	500	500	800	0.2	30
Greater than 10	1,000	1,000	1,000	0.2	30

4.7.21 Time current characteristics at 25°C (when specified; see 3.1 and 3.26). Each relay tested shall sustain five applications (make and carry only) of power concurrently on adjacent poles at each of the current levels and for the associated time duration as specified (see 3.1). Relays shall be tested at 28 V dc and 115/200 V ac, 400 Hz, 3 phase. The load shall be resistive. The cooling time between successive application of current shall be 30 minutes. Tests shall be performed at room ambient conditions and both the normally open and normally closed contacts shall be tested. Each relay case shall be connected to system ground through a single normal-blow fuse rated at the greater of 100 mA or five percent of load current. Unless otherwise specified, the monitoring equipment shall automatically hold the relay under test in the state in which the failure occurs (energized or de-energized), and the contact voltage shall be removed. All contacts in each sample shall switch identical loads. Following cycling, the electrical continuity of each case-grounding fuse shall be checked. As an alternative to the above, all failure indications shall be considered failures.

4.7.22 Life (see 3.28). Endurance load cycling tests shall be performed as specified (see 3.1), and succeeding paragraphs, with duty cycle in accordance with table XIV. The endurance test shall be conducted with 50 percent of the required operating cycles performed at the maximum temperature and altitude specified for the class of relay being tested. The altitude requirement for hermetically sealed relays and group B devices may be waived, provided that the ambient temperature is increased by 10 percent of that specified for the class of relay being tested. Unless otherwise specified (see 3.1), during all endurance tests, the control and contact voltages shall be the applicable dc or ac (open circuit) system voltage specified. Unless otherwise specified (see 3.1), the minimum number of operating (life) cycles shall be 100,000 cycles at each contact load rating. An individual relay shall be used for each load condition specified. Relay coil energization shall be asynchronous with the power supply for ac loads. Each relay case shall be connected to system ground through a single normal-blow fuse rated at the greater of 100 mA or five percent of load current, not to exceed three amperes. The ambient temperature of the interior of the test chamber shall be +125°C minimum unless otherwise specified (see 3.1). The voltage drop across closed contacts shall be monitored during 40 percent minimum of each “On” and each “Off” period, and shall not exceed 10 percent of the open circuit voltage. Alternative monitoring methods as approved by the qualifying activity may be used. Unless otherwise specified (see 3.1), the monitoring equipment shall automatically hold the relay under test in the state in which the failure occurs (energized or de-energized), and the contact voltage shall be removed. All contacts in each sample shall switch identical loads. Following cycling, the electrical continuity of each case-grounding fuse shall be checked. When 115/200 V ac 3 phase on relays with three or more poles, only three adjacent poles need to be tested. When 115/200 V ac 3 phase rating is specified in an individual specification sheet along with 115 V ac 1 phase, testing of the 1 phase load is not required. High level life testing may be performed on separate samples for the normally open and the normally closed contacts.

TABLE XIV. Duty cycle (seconds).

Relay type	Inductive (ac or dc)		Motor (ac or dc)		Resistive (ac or dc)	
	On	Off 1/	On	Off 1/	On	Off 1/
I, II, IV	0.5 ±0.05	3 ±0.1	0.35 ±0.09 2/	2 ±0.1	1.5 ±1.0	1.5 ±1.0
III	0.5 ±0.05	3 ±0.1	0.35 ±0.09 2/	10 ±0.1	0.5 ±0.5	2.5 ±0.5

1/ "Off" time may be decreased at the option of the manufacturer.
2/ Duration of the specified inrush current shall be 0.07 second ±0.02 second, after which it shall be reduced to its rated motor load for the remainder of the "On" period.

Downloaded from http://www.everyspec.com

4.7.22.1 Resistive load.

4.7.22.1.1 Resistive load, dc. The relay shall be subjected to the minimum operating cycles in a noninductive, resistive circuit; the current being maximum rated resistive loads specified (see 3.1) at each rated system voltage. Resistors used for loads shall have an L/R ratio not exceeding 1×10^{-4}.

4.7.22.1.2 Resistive load, ac. This test shall be the same as 4.7.22.1.1, except that the ac load shall be the resistive current specified.

4.7.22.2 Motor load.

4.7.22.2.1 Motor load, dc. The relay shall be subjected to the minimum operating cycles for making six times the rated motor load at rated system voltage and breaking the normal rated motor load.

4.7.22.2.2 Motor load, ac. The ac motor load test shall be as specified in 4.7.22.2.1, except that the value of the ac inrush current shall be five times rated motor load current or as specified (see 3.1).

4.7.22.3 Inductive load.

4.7.22.3.1 Inductive load, dc. The relay shall be subjected to the minimum operating cycles with the inductive loads specified using the duty cycle of table XIV. Appropriate inductive loads shall be used as approved by the qualifying activity (see 6.10).

4.7.22.3.2 Inductive load, ac. The relay shall be subjected to the minimum operating cycles with inductive loads for the rated current and voltage using the duty cycle of table XIV. Inductive load circuits shall consist of inductive and resistive load elements connected in series. The circuit parameters shall be rated inductive current, voltage, frequency, and 0.7 ±0.05 lagging power factor.

4.7.22.4 Lamp load. Unless otherwise specified, the lamp load shall be performed with the 28 V dc power supply voltage. Either lamps or simulated loads may be used to provide the load as follows:

a. Simulated loads shall subject the relays to making 12 times the rated lamp load and breaking the rated lamp load. The duration of the 12 times inrush shall be 0.015 second -0.020 second, the total "On" time shall be 5 seconds ±0.05 second and the "Off" time shall be 5 seconds ±2 seconds.

b. Lamps shall be screened to verify a minimum initial inrush of 12 times the rated lamp load. Only lamps meeting this requirement shall be used to provide load to the relays. The total "On" time shall be 2 seconds ±0.05 second and the "Off" time shall be 7 seconds ±2 second.

4.7.22.5 Load transfer, polyphase, ac (see 3.28.1). The relay contacts shall be connected to two separate and independent four-wire, three-phase (wye-connected) power supply systems in accordance with figure 12. The system (generator) voltage and load currents shall be as specified (see 3.1). The frequency of generator number one shall be maintained within 1 percent of specified rating. The frequency of generator number two shall be maintained 2 percent to 10 percent below the specified frequency (see 3.1).

As an alternate, a single power supply system may be used and the load switched between phases, provided the system voltage can be raised to 133/230 V rms, 3 phase ac (such as by use of a variable autotransformer) or a transformer is used as shown on figure 13. Transformer continuous duty rating must be at least as great as the loads to be switched. Voltage regulation at the load shall not exceed 2.5 percent when the line current of one or more phases is 10 times the specified load current.

Downloaded from http://www.everyspec.com

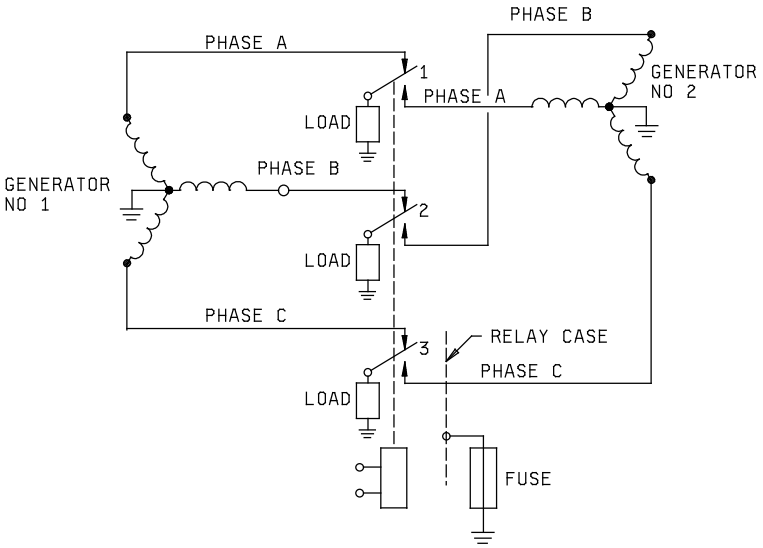

FIGURE 12. Test circuit, three phase load transfer.

Downloaded from http://www.everyspec.com

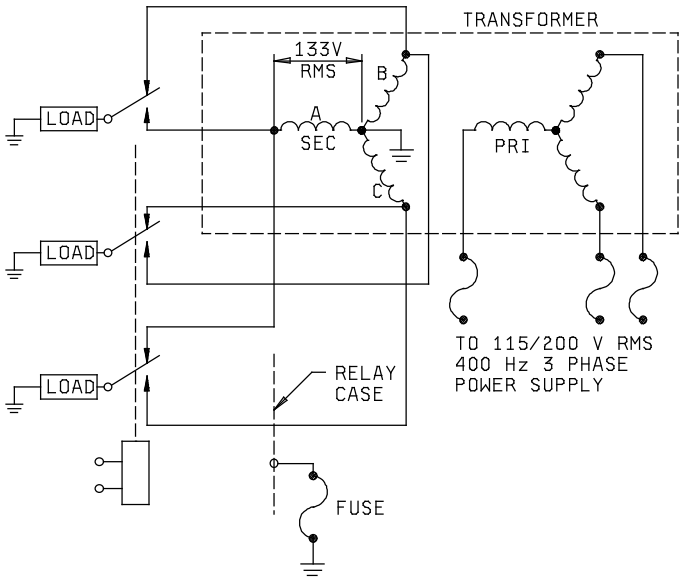

FIGURE 13. Alternate test circuit, three phase load transfer.

With rated coil voltage and current, the relay shall be subjected to 10,000 cycles of operation at a duty cycle of 5 seconds ±1 second "On" and 5 seconds ±1 second "Off". Loads shall be inductive ac (see 4.7.22.3.2). Current and voltage values shall be as specified (see 3.1). Each phase of the power supply system, and each movable contact of the relay shall be continuously monitored to determine phase to phase arc-over and contact sticking or welding. Single and two pole relays may be tested in the same manner by omitting contacts and loads not applicable. The test circuitry may be modified for testing interlock relays and relays with double break contacts. Interlock relays are to be energized alternately by use of a SPDT transfer switch device.

4.7.22.6 Mixed loads (see 3.28.2). The relay shall be subjected to 50,000 cycles as follows. Normally open and normally closed contacts shall be tested. Tests on normally open and normally closed contacts of double-throw relays shall be performed concurrently. The test voltage shall be 28 V dc ±1 V dc. During each cycle, the relay coil shall be energized for 29 seconds ±3 seconds and de-energized for 1.5 seconds ±0.5 seconds. During each cycle, the contacts to be tested shall make, carry, and interrupt the test current specified in the applicable paragraph below. While the contacts are carrying the test current, contact voltage drop measurements shall be made at the start of the test and shall not exceed the values shown in table XV. Tests on main and auxiliary contacts shall be performed concurrently. The test shall be performed at the maximum ambient temperature specified (see 3.1). The test shall be performed at sea level. Type III relays will be exempted from this test. The inductor shall be calibrated prior to load-endurance test. Photographic record of oscillograms showing compliance with inductor curve requirements shall be submitted for qualification approval (see 6.10). For single pole, single throw relays, rated resistive load shall be omitted. For single pole, double throw relays, each sample unit shall be tested with rated resistive load on the normally open contact and one of the specified mixed loads on the normally closed contact. All other relays shall be tested with rated resistive load on one pole, and the mixed loads specified above on the other available poles. For relays with more than four poles, the mixed loads specified above (less rated resistive) shall be assigned to the additional contacts in sequence. Where there are not enough available poles (three poles or less) to cover all the mixed loads, the loads (less rated resistive) shall be assigned on a rotating basis, and do not require additional samples when the test is performed. For qualification, a sufficient number of samples shall be selected to test all mixed loads.

Downloaded from http://www.everyspec.com

TABLE XV. Contact voltage drop.

Contact rating amperes rated resistive load	Initial millivolt drop (max) (see 4.7.8.3)	Initial allowable resistance calculated (ohm)	Allowable millivolt drop after test begins (max) 1/ 2/ 3/			
			Amperes 0.5 resistive	Amperes 0.3 inductive	Amperes 0.1 resistive	Rated resistive load
2 (auxiliary contacts)	150	0.075	63	38	13	175
5	150	0.030	40	24	8	175
10	150	0.015	32	20	7	175
15	150	0.010	30	18	6	175
20	150	0.010	30	18	6	175

1/ Maximum allowable contact voltage drop for rating not listed shall be determined by adding 0.05 ohm to calculated initial allowable resistance based on initial allowable contact voltage drop with a maximum of 200 millivolts. The millivolts drop at rated current shall not exceed the limits of contact voltage drop specified in 4.7.8.3.

$$E_{\max}(mV) = I_{load} \times \left[\frac{0.150}{I_{Rated}} + 0.05 \right] \times 1{,}000$$

For relays fully rated 25 amperes and above, and for mixed loads, the primary contact shall be tested at 10 percent of the rated resistive load. The auxiliary contacts shall be tested as specified above.

2/ Where the lowest specified load (resistive, motor, inductive, lamp) of a relay's power contacts is 25 amperes or greater:

a. Two percent of the specified operations may exceed the mV drop listed in the table, but no more than three operations may exceed 1,000 mV drop.

b. Cycle rate to be 20 seconds on, 10 seconds off.

3/ For relays without auxiliaries, the contacts shall be tested at 10 percent of the rated resistive load.

4.7.22.6.1 Rating, not specified. If the relay has more than four poles, the above loads shall be repeated in the sequence listed. Rated load shall be omitted for single pole, single throw relays. For single pole, double throw relays, each sample unit shall be tested with rated load on the normally open and specified intermediate current on the closed contact. One pole of all other relays shall be tested with rated load on one normally open and one normally closed contact. The test shall be performed at the maximum ambient temperature specified (see 3.1). Both normally open and normally closed contacts shall make and break the above specified loads with no failure throughout the test. For relays rated above 20 amperes resistive load (dc), one pole of the relay power contacts shall be loaded at rated resistive load (dc), and all other poles shall be loaded at 10 percent of rated resistive load.

4.7.23 Resistance to solvents (see 3.29). Relays shall be tested in accordance with method 215 of MIL-STD-202. The following details and exceptions apply:

a. Portion to be brushed: All markings.

b. Specimens to be tested: One sample shall be tested with each solvent solution. For qualification inspection, samples in excess of the available number of solvents shall be exempt from testing. For group C testing, two additional samples shall be selected. The additional samples may be electrical rejects from group A2.

c. Examination: Specimens shall be examined for legibility of markings.

4.7.24 Continuous current (see 3.30). This test shall be performed at the maximum temperature and altitude specified for the class of relay being tested (see 3.1). Other conditions of the test shall be in accordance with 4.7.22. During the first three hours of this test, the relay coil shall not be energized. Normally closed contacts shall be loaded with the

Downloaded from http://www.everyspec.com

highest rated resistive load. At the end of the three hour period, with no change in the ambient conditions, the pickup voltage of the relays shall be determined and shall be within the limit specified. During the next portion of the test, the coils of type I, type II, and type IV shall be energized continuously for 97 hours. Type III relays shall be cycled for the minimum operating cycles specified (see 3.1), at a duty cycle as shown in 4.7.22 for resistive load. The coil voltage shall be the minimum specified. Contacts that are in the closed position when the relay coil is energized shall carry the rated resistive current at any convenient voltage. Immediately following the operating period, and with the relay still at the specified temperature, the relay shall be tested to determine that the energized function is completed when pickup voltage is applied. Terminal temperature rise shall be monitored throughout the test and shall not exceed 75°C.

4.7.25 Mechanical interlock (when applicable; see 3.1 and 3.31). Relays incorporating a mechanical interlocking feature shall be subjected to the following tests. With one set of relay contacts held in the closed position as specified below, maximum operating voltage shall be applied to the actuating coil of the opposing set of contacts for 200 cycles. The operational cycle shall consist of 0.5 second ON and 2.5 seconds OFF. A suitable indicating device shall be used to determine conformance of the relay. The specified 200 cycles of operation shall be applied under each of the following conditions:

a. The first set of relay contacts being held in the closed position by maximum operating voltage applied to the actuating coil.

b. The second set of relay contacts being held in the closed position by maximum operating voltage applied to the actuating coil.

c. The first set of the relay contacts held in the closed position by mechanical means. The manufacturer may submit an opened sample unit of a sealed relay for this test.

d. The second set of relay contacts held in the closed position by mechanical means. The manufacturer may submit an opened sample unit of a sealed relay for this test.

4.7.26 Intermediate current (when specified; see 3.32). Intermediate current shall not be considered a low level or high level contact load rating (see 6.1.1). Relays shall be tested as specified in method 312 of MIL-STD-202. The following details and exceptions shall apply:

a. Maximum contact resistance: As specified in 3.13.3.

b. Coil energizing voltage: Rated voltage (see 3.1).

c. Cycling rate: 10 cycles ±2 cycles per minute with minimum of 75 percent coil "ON" time. For latching relays, the relay shall be in each position for approximately one-half the cycle time. Each coil shall be energized for a minimum of 75 percent of each operation.

d. Contact current/voltage: 100 mA at 28 V dc.

e. Monitoring: At least 40 percent of the closed time of each contact during each cycle shall be monitored for contact resistance.

f. Number of cycles: 50,000 cycles.

g. Ambient temperature: +125°C minimum.

4.7.27 Internal moisture (when specified; see 3.1 and 3.33). The relays shall be energized at rated coil voltage or current and stabilized at the maximum rated temperature specified (see 3.1). The relays shall then be held for 1 hour minimum with the coils energized at rated voltage or current for nonlatching relays; for latching relays, one coil shall be energized for 30 minutes minimum, then the other coil shall be energized for 30 minutes minimum. After 1 hour minimum, the coil voltage or current shall be increased to 140 percent of rated coil voltage or current for 2 minutes minimum for nonlatching relays and 2 minutes minimum for each coil of latching relays. After 2 minutes, the coil voltage or current shall be removed and the relays immediately transferred to a thermal chamber stabilized (prior to opening of the chamber) at the minimum rated temperature specified (see 3.1). The transfer between chambers shall be accomplished in 5 minutes maximum. Immediately energize the coils with rated voltage or current and maintain the

Downloaded from http://www.everyspec.com

relays at the minimum rated temperature after the chamber has restabilized for a period of 1 hour minimum for nonlatching relays; for latching relays, one coil shall be energized for 30 minutes minimum, then the other coil shall be energized for 30 minutes minimum. After 1 hour minimum remove the coil voltage or current while simultaneously measuring the contact voltage drop or resistance of all normally closed contacts for nonlatching relays and the open contacts that are being closed for latching relays. The contact load shall be 10 mA to 50 mA at 10 mV dc to 50 mV dc. After the specified contact stabilization time (see 3.1), the contact voltage drop shall not exceed 5 mV dc or the contact resistance shall not exceed 100 milliohms. If a relay indicates a failure, and icing of the test socket is suspected to be the cause of failure indication, one complete retest is permitted with the relay mounted in a different socket.

4.7.28 Mechanical life (endurance at reduced load; see 3.27). With rated coil voltage, the relay shall be cycled at 25 percent of rated resistive load for four times the specified minimum operating cycles for relays under 25 amperes contact rating (resistive), and two times the specified minimum operating cycles for relays of 25 amperes and over. The cycling rate shall be that specified for resistive loads in 4.7.22. Each relay circuit (normally open and normally closed contacts of all poles), including interlock circuits if they exist, shall be loaded at 25 percent of rated resistive load current (steady-state) at 28 V dc or rated ac voltage. Associated with each load shall be a circuit that will detect failure to open and close the circuit. Failure to close shall be specified as a voltage drop across the contacts exceeding 10 percent of full load voltage. During the test, each set of contacts shall open and close its individual circuit in the proper sequence. Each relay case shall be connected to system ground through a single normal-blow fuse rated at the greater of 100 mA or five percent of load current. Unless otherwise specified, the monitoring equipment shall automatically hold the relay under test in the state in which the failure occurs (energized or de-energized), and the contact voltage shall be removed. All contacts in each sample shall switch identical loads. Following cycling, the electrical continuity of each case-grounding fuse shall be checked. As an alternative to the above, all failure indications shall be considered failures.

4.7.29 Low temperature operation (see 3.36). The relay shall be subjected to the low temperature specified (see 3.1), for a period of 48 hours. At the end of this period, and with the relay at the low temperature, the pickup voltage, dropout voltage, and contact voltage drop shall be measured as specified in 4.7.8.4, and 4.7.8.3, except that a 30-minute pre-conditioning is not required. (These tests shall be accomplished in the sequence listed and in a minimum amount of time to prevent significant heating of the coil.) The relay shall then be tested intermittently for pickup and dropout voltage until it attains room temperature. Relays, which contain permanent magnets in the magnetic circuit, shall, in addition to the above tests, be subjected to the demagnetizing effect of the cold coil energized with maximum voltage specified. During the low temperature test, after approximately 24 hours, these relays shall be operated by the sudden application of maximum coil voltage for one operation. Latch relays and center off relays containing permanent magnets shall be operated in both directions with coil energized, for a period not exceeding 2 seconds, so no appreciable heating will occur. All units subjected to the demagnetizing effect shall be tested in accordance with high temperature pickup voltage (see 4.7.8), at the conclusion of this test.

5. PACKAGING

5.1 Packaging. For acquisition purposes, the packaging requirements shall be as specified in the contract or order (see 6.2). When packaging of materiel is to be performed by DoD or in-house contractor personnel, these personnel need to contact the responsible packaging activity to ascertain packaging requirements. Packaging requirements are maintained by the Inventory Control Point's packaging activities within the Military Service or Defense Agency, or within the military service's system commands. Packaging data retrieval is available from the managing Military Department's or Defense Agency's automated packaging files, CD-ROM products, or by contacting the responsible packaging activity.

6. NOTES.

(This section contains information of a general or explanatory nature that may be helpful, but is not mandatory.)

6.1 Intended use. Relays conforming to this specification are intended for use in direct or alternating current (single or multiphase) electrical systems as a means of controlling the making and breaking of circuits for electrically operated equipment and devices. Their principal areas of application are aircraft, missiles, spacecraft, and ground support equipment. This does not preclude the use of these relays in other military applications.

CAUTION: The use of any coil voltage less than the rated coil voltage will compromise the operation of the relay.

Downloaded from http://www.everyspec.com

CAUTION: Transfer relay contacts should not be used to ground the load in one position and to the 115 volt terminal in the other position. Transfer relay contacts should not be used to transfer loads between phases or between unsynchronized ac sources.

CAUTION: When latching relays are installed in equipment, the latch and reset coils should not be pulsed simultaneously. Coils should not be pulsed with less than the rated coil voltage, and the pulse width should be a minimum of three times the specified operate time of the relay. If these conditions are not followed, it is possible for the relay to be in the magnetically neutral position.

6.1.1 Contact rating. The contact ratings of relays covered by this specification are based on load life tests which establish the relay capability to switch rated loads. For the purposes of this specification, contact load ratings are defined as follows:

a. Low level: 10 µA to 50 µA at 10 mV to 50 mV.

b. Intermediate: 10 mA at 6 V to 100 mA at 28 V.

c. High level: Above 100 mA at 28 V.

6.1.2 Contact voltage rating. Users of relays are cautioned that a 115/200 volt rating indicates that the relay is designed for use in a three-phase system. The relay may not be capable of having 200 volts applied per pole across the one set of contacts. Prior to using relay with such a rating in a circuit where it is required to interrupt 200 volts across an individual set of contacts, the manufacturers of the relay should be consulted.

6.1.3 Load transfer rating, three-phase ac. Unless a load transfer three-phase ac rating specifying both current and system voltage is on the specification sheet, relays are not to be used in three-phase load transfer applications.

6.1.4 Capacitive loads. A capacitor load or any load having a capacitor in parallel, can theoretically sustain an infinite current during switching transients. Therefore, the total circuit must be analyzed to determine the circuit impedance including wire resistance and power supply impedance in series with the capacitor, and the peak supply voltage (ac or dc). In order to ensure that this current will not weld the contacts, a relay should be specified which has a motor load rating that is greater than 18 percent of the peak switching current. A second detrimental phenomena associated with the capacitive loads and dc power supplies affects the number of life cycles. The arc generated during contact bounce when closing contacts will transfer material from one contact to the other. Since the break current is very low, the material transferred tends to build up like a stalactite leaving a corresponding cavity on the mating contact. (With loads having break currents, the materials tend to disperse (smooth out) during contact break.) After a number of cycles, the stalactite will catch in the cavity and the contacts will not open. Thus, the number of life cycles may be reduced. Since it is difficult to predict the total life cycles for a relay used under these conditions, it is recommended that the applications engineer contact the manufacturer and discuss any applications where the inrush current is greater than the motor load divided by 18 percent.

6.2 Acquisition requirements. Acquisition documents must specify the following:

a. Title, number, and date of the specification, the applicable associated specification sheet, and the complete PIN (see 1.2.3).

b. Packaging requirements (see 5.1).

c. If special or additional identification marking is required (see 3.37).

d. If the terminals are to be solder dipped (retinned).

6.3 Qualification. With respect to products requiring qualification, awards will be made only for products which are, at the time of award of contract, qualified for inclusion in Qualified Products List QPL No. 6106 whether or not such products have actually been so listed by that date. The attention of the contractors is called to these requirements, and manufacturers are urged to arrange to have the products that they propose to offer to the Federal Government tested for qualification in order that they may be eligible to be awarded contracts or orders for the products covered

Downloaded from http://www.everyspec.com

by this specification. Information pertaining to qualification of products may be obtained from (Passive Devices Team, P.O. Box 3990, Columbus, OH 43218-3990, vqp.arw@dla.mil or vqp.kr@dla.mil). An online listing of products qualified to this specification may be found in the Qualified Products Database (QPD) at http://assist.daps.dla.mil.

6.3.1 Provisions Governing Qualification, SD-6. Copies of "Provisions Governing Qualification SD-6" may be obtained upon application to the Defense Printing Service Detachment Office, Building 4D, Customer Service, 700 Robbins Avenue, Philadelphia, PA 19111-5094.

6.4 Shelf life. Relays conforming to this specification should be designed for a minimum of seven years shelf life, following which the relays should be satisfactory for intended use without further conditioning.

6.5 Sealing. The following procedure is suggested as a guide; however, every effort should be made to utilize the most effective procedure consistent with the state of the art.

a. Evacuate to less than 200 microns.

b. Heat to maximum rated ambient temperature with continued evacuation (see 3.1).

c. Maintain heat and vacuum for 12 hours or longer, continuing the treatment until a maximum pressure of 80 microns is reached.

d. Turn off heaters and maintain pressure for 4 hours.

e. Close evacuation valve and fill chamber with the desired pressurizing gas.

f. Seal relay before removing from chamber.

6.6 Intermetallic contact. The finishing of metallic areas to be placed in intimate contact by assembly presents a special problem, since intermetallic contact of dissimilar metals results in electrolytic couples which promote corrosion through galvanic action. To provide the required corrosion protection, intermetallic couples are restricted to those permitted by MIL-STD-889.

6.7 Magnetic orientation. Magnetic orientation of a relay may be determined by energizing the coil with a known polarity and checking for attraction or repulsion of a permanent magnet to an external surface of the relay.

6.8 Fixturing losses. It is known that there is inherent resistance in sockets, wiring, etc. The qualifying activity will evaluate the manufacturer's system to determine conformance to specification requirements.

6.9 DC coil resistance. In the event that measurement is impractical, the relay may be stabilized at any other ambient temperature for 2 hours, the resistance measured and the resistance recalculated using the temperature coefficient of resistance formula for copper magnet wire.

$$R_{23} = \frac{R_T}{1 + K(T - 23)}$$

Where: R_T = Resistance at the new ambient temperature.
R_{23} = Resistance at +23°C.
K = Temperature coefficient (0.00393 for copper 23°C).
T = New ambient temperature in degrees C.

6.10 Inductors. Inductors meeting the requirements of MIL-I-81023, "Inductor, 28 V.D.C. Laboratory Test General Specification for" have been considered acceptable.

Downloaded from http://www.everyspec.com

6.11 Glossary. The definitions listed below are not a complete glossary of relay terminology, but rather are intended as definitions of the technical terms as applied within this specification.

Adjunct sealant: Any hydrocarbon or silicon material used on the exterior of the unit to improve the hermetically of a hermetically sealed relay.

Bounce time: The time interval between first make of the contact until the uncontrolled making and breaking of the contact ceases.

Chatter, contact: The undesired opening of mating contacts resulting from uncompensated ac operation, or from external shock and vibration.

Class O relays: Class O relays previously covered by MIL-R-6106B no longer meet requirements of this specification. No new class O relay standards will be issued. Existing class O relay standards are inactive for new design and are being retained only for the purpose of acquiring replenishment spare parts by Government activities. Class O relays were defined in MIL-R-6106B as follows: Class O, sealed or unsealed relays designed for 71°C maximum ambient temperature and 50,000 feet maximum altitude.

Coil: One or more windings on a common form.

Coil current: The current which flows through the coil when maximum control voltage is applied with the relay stabilized at room temperature and the measurement taken within 60 seconds after application of coil voltage.
Coil voltage, rated: The coil voltage at which the relay is to operate and meet all specified electrical, mechanical, and environmental requirements.

Contacts: The current carrying parts of a relay that open or close electrical circuits.

Contact arrangement: The combination of contact forms that make up the entire relay switching structure.

Contact bounce: Intermittent opening of contacts after initial closure due to contact impact. Represented by the time interval from initial closure of a contact to the end of bounce during pickup and dropout.

Contact force: The force exerted by a movable contact against a mating contact when the contacts are closed.

Contact gap: The distance between a pair of mating relay contacts when the contacts are open.

Contact weld: A contact failure due to fusing of closed contacts, resulting in their failure to open.

Cycle, relay: A relay cycle is defined as when a relay picks up and drops out, (one opening and one closure of a set of contacts). Therefore, a cycle consists of two operations.

Degassing: A process of thermally cleaning a relay (at elevated temperatures) to drive off harmful gases. Degassing is usually performed using vacuum pumps.

Dropout value (voltage), specified (not applicable to latching relays): As the current or voltage on an operated relay is decreased, the value at or above which all relay contacts must restore to their unoperated positions.

Economizer coils. An economizer coil is one that has a high inrush current for pickup and a lower holding current.

Hermetically sealed relay: A relay contained within an enclosure that is sealed by fusion to insure a low rate of gas leakage. This usually refers to metal-to-metal, or metal-to-glass sealing.

Hold value (voltage), specified (not applicable to latching relays): As the current or voltage on an operated relay is decreased, the value which must be exceeded before any contact change occurs.

Latching relay: A two position relay whose contacts transfer only as a result of coil energization (depending on design) (of either a particular polarity, or of a particular coil), remain in that position with no coil energization, and transfer to the alternate position only as a result of coil energization (of either the opposite polarity, or of the other

Downloaded from http://www.everyspec.com

coil, respectively).

Mechanical interlock test (see 4.7.25). The purpose of this test is to determine that relays with dual coil circuits and a built-in mechanical interlock, will not switch to the opposite state as long as the first state is maintained closed, either by the coil being energized or due to a fault such as welded contacts. Catastrophic failures in such circuits as motor reversing and load transfer between power supplies could occur if this interlock feature does not function properly. The proper functioning of the mechanical interlock feature insures that only one set of main contacts can be closed at a time and preferably that those first closed remain closed as long as the coil is energized even when the second coil is energized subsequently. Some magnetic latch two-coil, two-position relays will assume a neutral position with both coils energized.

Mechanical life test (endurance at reduced load) (see 4.7.22). This test is performed to verify that at 25 percent of rated resistive load, relays rated under 25 amperes have a life capability of four times the specified minimum operating cycles, and relays rated at 25 amperes (and above) have a life capability of two times the specified minimum operating cycles. This test illustrates (very conservatively) the inverse relationship between contact loading and life.

Miss: Failure to establish the intended circuit conditions (high or low output resistance, as applicable).
Mixed load test (see 4.7.22.6).

a. The purpose of this test is to verify the following:

   (1) For relays whose main contacts are rated at 20 amperes and below and auxiliary contacts of any relay: Verify the capability to switch intermediate level loads, or intermediate and power level loads concurrently on adjacent contacts or poles. The contact loading of the relay is determined by its contact form/pole configuration.

   (2) For relay whose main contacts are rated above 20 amperes: Verify the capability to switch reduced power level loads (such as 10 percent of rated resistive load) or reduced power level and rated loads concurrently on adjacent poles or contacts. The contact loading of the relay is determined by its contact pole configuration.

b. As a result of the foregoing, this test can be thought of and consisting of two subtests:

   (1) Intermediate level load subtest.

   (2) Reduced level load subtest.

Normally closed contacts: Those contacts that are closed with the relay de-energized.

Normally open contacts: Those contacts that are open with the relay de-energized.

Operate time: The interval between the application of a step function input signal and closing of all normally open contacts. Bounce time is not included.

Pickup value (voltage), specified: As the current or voltage on an unoperated relay is increased, the value (voltage) at or below which all contacts must function.

Polarized relay: A relay, the operation of which is primarily dependent upon the direction (polarity) of the energizing current(s) and the resultant magnetic flux. The opposite of neutral relay. Also called "polar relay".

Relay contactor: A relay whose main contacts are designed for the switching of high amperage power (considered to be 25 amperes or more). A contactor relay is typically used to distribute electricity from the power source to the load bus or between buses and may have special switching requirements unique to the application. The contactor relay often has auxiliary contacts which are a secondary contact system used for switching low amperage currents (5 amperes or less) and driven by the same actuator as the main contacts.

Relay, fully rated: Any relay whose lowest specified rating for any load is 25 amperes or higher.

Downloaded from http://www.everyspec.com

Relay, not fully rated: Relays that have 25 ampere (ac or dc) resistive load ratings and all other load ratings (inductive, motor, or lamp) less than 25 amperes. It allows these relays to function in the classification of power relays for the resistive load rating but the testing is conducted as specified for relays rated less than 25 amperes.

Release time: The interval between the trailing edge of a step function input signal and closing of all normally closed contacts. Bounce time is not included. Not applicable to latching relays.

Shelf life: A period of time a relay can be stored unused before detrimental changes occur which would cause the item not to properly perform its function within the requirements of this specification.

Silicone: Any of a group of semi-inorganic polymers based on the structural unit R_2 Si0, where R is an organic group, characterized by wide range thermal stability, high lubricity, extreme water repellence, and physiochemical inertness, used in adhesives, lubricants, protective coatings, paints, electrical insulation, synthetic rubber, and prosthetic replacements for bodily parts.

Transfer time: The time interval between the opening of the closed contact and the closing of the open contact of a break-make-contact combination. For multipole relays, transfer time is defined as the interval between the opening of the last closed contact and the closing of the first open contact of any set.

6.12 Fungus inert materials. For further guidance of fungus, see requirement 4 of MIL-HDBK-454.

6.13 Tin whisker growth. The use of alloys with tin content greater than 97 percent, by mass, may exhibit tin whisker growth problems after manufacture. Tin whiskers may occur anytime from a day to years after manufacture and can develop under typical operating conditions, on products that use such materials. Conformal coatings applied over top of a whisker-prone surface will not prevent the formation of tin whiskers. Alloys of 3 percent lead, by mass, have shown to inhibit the growth of tin whiskers. For additional information on this matter, refer to ASTM-B545 (Standard Specification for Electrodeposited Coatings of Tin).

6.14 Subject term (key word) listing.

AC coil
All welded
Coil transient suppression
Established reliability
Hermetically sealed
Low level contact rating
Magnetic latch

6.15 Environmentally preferable material. Environmentally preferable materials should be used to the maximum extent possible to meet the requirements of this specification. As of the dating of this document, the U.S. Environmentally Protection Agency (EPA) is focusing efforts on reducing 31 priority chemicals. The list of chemicals and additional information is available on their website at http://www.epa.gov/osw/hazard/wastemin/priority.htm. Included in the list of 31 priority chemicals are cadmium, lead, and mercury. Use of the materials on the list should be minimized or eliminated unless needed to meet the requirements specified herein (see section 3).

6.16 Changes from previous issue. The margins of this specification are marked with vertical lines to indicate where changes from the previous issue were made. This was done as a convenience only and the Government assumes no liability whatsoever for any inaccuracies in these notations. Bidders and contractors are cautioned to evaluate the requirements of this document based on the entire content irrespective of the marginal notations and relationship to the last previous issue.

Downloaded from http://www.everyspec.com

Custodians:
Army - CR
Navy - AS
Air Force - 85
DLA – CC
NASA - NA

Review activities:
Navy - EC
Air Force - 99

Preparing activity:
DLA - CC

(Project 5945-2009-004)

NOTE: The activities listed above were interested in this document as of the date of this document. Since organizations and responsibilities can change, you should verify the currency of the information above using the ASSIST Online database at http://assist.daps.dla.mil/.