METRIC

MIL-PRF-6085E
8 December 2011

SUPERSEDING
MIL-PRF-6085D
20 February 1998

PERFORMANCE SPECIFICATION

LUBRICATING OIL, INSTRUMENT, AIRCRAFT, LOW VOLATILITY

Comments, suggestions, or questions on this document should be addressed to AFPA/PTPT, 2430 C Street, Bldg 70, Area B, Wright-Patterson AFB OH 45433-7632 or e-mailed to AFPET.AFTT@wpafb.af.mil. Since contact information can change, you may want to verify the currency of this address information using the ASSIST Online database at https://assist.daps.dla.mil.

AMSC N/A FSC 9150

DISTRIBUTION STATEMENT A. Approved for public release; distribution is unlimited.

This specification is approved for use by all Departments and Agencies of the Department of Defense.

1. SCOPE

1.1 Scope. This specification covers one grade of aircraft instrument lubricating oil only (see 6.1). The lubricating oil is identified by military symbol OAI and NATO Code No. 0-147 (see 6.5).

1.2 Part or identifying number (PIN). The PIN to be used for lubricating oil acquired to this specification is created as follows:

M6085 - X

Container Size
1 = 1.5 oz.
2 = 4 oz.
3 = 8 oz.
4 = 1 quart
5 = 5 gallon

2 APPLICABLE DOCUMENTS

2.1 General. The documents listed in this section are specified in sections 3, 4, or 5 of this specification. This section does not include documents cited in other sections of this specification or recommended for additional information or as examples. While every effort has been made to ensure the completeness of this list, document users are cautioned that they must meet all specified requirements of documents cited in sections 3, 4, or 5 of this specification, whether or not they are listed.

2.2 Government documents.

2.2.1 Specifications, standards, and handbooks. The following specifications, standards and handbooks form a part of this document to the extent specified herein. Unless otherwise specified, the issues of these documents are those cited in the solicitation or contract.

FEDERAL SPECIFICATIONS

QQ-S-698 Steel, Sheet and Strip, Low Carbon

DEPARTMENT OF DEFENSE SPECIFICATIONS

MIL-PRF-680 Degreasing Solvent

(Copies of these documents are available online at https://assist.daps.dla.mil or from the Standardization Document Order Desk, 700 Robbins Avenue, Bldg 4D, Philadelphia PA 19111-5094.)

2.3 Non-government publications. The following documents form a part of this document to the extent specified herein. Unless otherwise specified, the issues of these documents are those cited in the solicitation or contract.

ASTM INTERNATIONAL

ASTM A29/A29M Standard Specification for Steel Bars, Carbon and Alloy, Hot-Wrought, General Requirements for (DoD Adopted)

ASTM B36/B36M Standard Specification for Brass Plate, Sheet, Strip, And Rolled Bar (DoD Adopted)

ASTM D91 Standard Test Method for Precipitation Number of Lubricating Oils (DoD Adopted)

ASTM D92 Standard Test Method for Flash and Fire Points by Cleveland Open Cup Tester (DoD Adopted)

ASTM D97 Standard Test Method for Pour Point of Petroleum Products (DoD Adopted)

ASTM D445	Standard Test Method for Kinematic Viscosity of Transparent and Opaque Liquids (and Calculation of Dynamic Viscosity) (DoD Adopted)
ASTM D972	Standard Test Method for Evaporation Loss of Lubricating Greases and Oils (DoD Adopted)
ASTM D974	Standard Test Method for Acid and Base Number by Color-Indicator Titration (DoD Adopted)
ASTM D1500	Standard Test Method for ASTM Color of Petroleum Products (ASTM Color Scale) (DoD Adopted)
ASTM D1748	Standard Test Method for Rust Protection by Metal Preservatives in the Humidity Cabinet (DoD Adopted)
ASTM D4057	Standard Practice for Manual Sampling of Petroleum and Petroleum Products (DoD Adopted)
ASTM D4636	Standard Test Method for Corrosiveness and Oxidation Stability of Hydraulic Oils, Aircraft Turbine Engine Lubricants, and Other Highly Refined Oils (DoD Adopted)

(Copies of these documents are available online at http://www.astm.org or from ASTM International, 100 Barr Harbor Drive, West Conshohocken PA 19428-2959)

2.4 Order of precedence. Unless otherwise noted herein or in the contract, in the event of a conflict between the text of this document and the references cited herein, the text of this document takes precedence. Nothing in this document, however, supersedes applicable laws and regulations unless a specific exemption has been obtained.

3. REQUIREMENTS

3.1 Qualification. The instrument oil furnished under this specification shall be products that are authorized by the qualifying activity for listing on the applicable qualified products list before contract award (see 4.2 and 6.3).

3.2 Materials. Aircraft instrument lubricating oil (low volatility) shall consist substantially of synthetic base oil and additive materials to impart oxidation stability and corrosion-protective properties. Certain esters of the dibasic organic acids containing six to ten carbon atoms are known to be suitable for use but are not mandatory. The right is reserved to subject oils of new or unusual composition to such additional tests as are considered necessary to ensure serviceability of the material. Viscosity-temperature coefficient (VI) improvers or pour point depressants shall not be used.

3.3 Properties. Products shall conform to the requirements as specified in Table I and 3.4 through 3.6 when tested as specified in Section 4.

TABLE I. Properties of the finished oil.

Characteristic	Value
Viscosity in centistokes	
at 54°C (min)	8
at -54°C (max)	12,000
Pour point (max)	-57°C
Flash point (min)	185°C
Precipitation number (max)	0
Acid number	report

3.4 Performance

3.4.1 Corrosion and oxidation stability. When tested as specified in *section 4* the change in weight of cadmium-plated steel, copper, steel aluminum alloy, and magnesium alloy, when subjected to the action of the oil for 168 hours at 121°C ±1°C, shall be not greater than 0.2 mg per square cm of surface for each strip. There shall be no pitting, etching, or visible corrosion on the surface of any of the metals when viewed under magnification of 20 diameters. Slight discoloration of the surface of the copper will be permitted, but dark brown, gray or black stain shall be cause for rejection.

3.4.2 Resistance to oxidation. When tested as specified in *section 4*, the oil shall not have changed more than ±5 percent from the original viscosity in centistokes at 54.4°C after the oxidation-corrosion test (see *4.4.2*). The neutralization number increase shall be not greater than 0.5 after oxidation. There shall be no evidence of separation of insoluble materials or gumming of the oil.

3.4.3 Low temperature stability. When tested as specified in *section 4*, there shall be no gelling or separation of solid or liquid phases in the oil after storage at a temperature at or below -54°C for 72 hours. The presence of a dense cloud, which does not “settle out”, shall not be the cause for rejection.

3.4.4 Evaporation. When tested as specified in *section 4*, there shall be not more than 1.80 percent by weight evaporation loss after the oil has been subjected to the test conditions, at 120°C ±1°C.

3.4.5 Corrosivity. When subjected to the test specified in *section 4*, the test areas of the three discs shall show no evidence of corrosion, pitting or other attack. The discs may show no more than three spots within the area covered by the clip.

3.5 Color and appearance. When tested as specified in *section 4*, the oil shall be clear, transparent and uniform in appearance, and not darker than No. 5 Union Colorimeter of *ASTM D1500.*

3.6 Protection of panels. When tested as specified in *section 4*, not more than one panel out of five panels shall fail after being covered with a film of lubricating oil for 100 hours. If more than one panel fails, the product shall be retested by repeating the same test with an additional ten panels. Not more than four panels shall fail out of the total 15 panels, (the five panels on the original test plus the ten panels on retest).

3.7 Workmanship. The oil shall be entirely homogeneous and free from lumps of undissolved additive, water, dirt, lint or sediment. Prior to final packaging the oil shall be filtered through a 0.45 micrometer pore-size filter.

4. VERIFICATION

4.1 Classification of inspections. The inspection requirements specified herein are classified as follows:

a. Qualification inspection (see 4.2).

b. Periodic qualification re-evaluation (see 4.2.4).

c. Conformance inspection (see 4.3).

4.2 Qualification inspection. Qualification inspection shall consist of a review for approval of the submitted manufacturers test report and subjecting the qualification samples (see *4.2.1*) to examination and testing for all the requirements of this specification.

4.2.1 Qualification samples. The qualification sample(s) shall consist of 1 gallon finished oil.

4.2.2 Qualification tests. Qualification sample(s) shall be subjected to all tests specified in *4.4*, method of inspection.

4.2.3 Retention of qualification. In order to retain qualification of a product approved for listing on the QPL, the manufacturer shall verify by certification to the qualifying activity that the manufacturer's product complies with the requirements of this specification. The time of periodic verification by certification shall be in five-year intervals from the date of original qualification. The Government reserves the right to re-examine the qualified product whenever deemed necessary to determine that the product continues to meet any or all of the specification requirements.

4.2.4 Periodic qualification re-evaluation. The instrument oil shall pass a qualification re-evaluation of a one gallon sample taken from the first lot of oil processed under a contract or order after the product has passed the qualification inspection, and at intervals as considered necessary to verify the consistency of production quality.

4.3 Conformance inspection. The conformance samples shall be labeled completely with information identifying the purposes of the sample, name of product, specification number, lot and batch number (packaged or bulk - see *6.7*), date of sampling, and contract number. Quality conformance tests shall be as specified in *table II*.

4.3.1 Sampling. Sampling shall be in accordance with ASTM D4057.

TABLE II. Quality conformance tests.

Inspection	Paragraph Requirement	Test
Corrosion and oxidation stability	*3.4.1, 3.4.2*	*4.4.2*
Low temperature stability	*3.4.3*	*4.4.2*
Viscosity	*3.3*	*4.4.2*
Pour point	*3.3*	*4.4.2*
Flash point	*3.3*	*4.4.2*
Precipitation number	*3.3*	*4.4.2*
Evaporation	*3.4.4*	*4.4.2*
Examination of filled containers	*5.1*	*4.4.3*
Color	*3.5*	*4.4.2*

4.4 Method of inspection

4.4.1 Inspection. Inspection shall be in accordance with *4.4.3* of this specification.

4.4.2 Physiochemical values. The oil properties shall be determined in accordance with the applicable methods specified in *table III* and *4.4.1* through *4.4.3*. Physical and chemical values specified in *section 3* apply to the arithmetic average of the determinations made on the samples for those values that fall within any stated repeatability or reproducibility limits of the applicable test method.

TABLE III. Test methods for oil properties.

CHARACTERISTIC	ASTM TEST METHODS
Corrosion and oxidation stability	*D4636* [1/]
Pour point	*D97*
Flash point (open cup method)	*D92*
Precipitation number	*D91*
Viscosity (kinematic)	*D445*
Color	*D1500*
Evaporation loss of lubricating greases and oils	*D972*
Acid number	*D974*
Note: [1/] *Test shall be run for 168 hours at 121°C. Use hexane, heptane, and/or acetone to clean coupons. Use Alternate Procedure 2.*	

4.4.3 Examination of filled container. Each sample of the filled unit container and the shipping container shall be examined for evidence of leakage and net content, and examined for construction defects in the container and closure. Any container in the sample that is under the required fill, or has one or more defects shall be rejected. Rejected lots may be resubmitted for acceptance inspection provided that the contractor has removed or repaired all nonconforming containers.

4.4.4 Protection test

4.4.4.1 Preparation of panels. The following procedures shall be conducted:

a. Cut five panels from steel that conforms to *QQ-S-698*.

b. Size the panels and locate the holes as shown in *figure A7* of *ASTM D 1748*. Remove all burrs, sharp edges and corners, including the edges of the holes.

c. Highly polish the panel with No. 3/0 emery paper prior to use. Next wash and clean the panel in a solvent conforming to *MIL-PRF-680, type 1*. Then drain thoroughly and agitate in boiling 95-percent methanol.

d. After cleansing, cool the panels in a desiccator. Care must be taken during cleaning and preparation to ensure that the surfaces are not contaminated by fingerprints. Handle the panels only with tongs during the cleaning operation and only with hooks during and after dipping.

4.4.4.2 Procedure. These steps shall be conducted:

a. Dip five panels in a suitable sample of lubricating oil which is maintained at 25°C ±2°C, remove and allow to drain for 2 hours at that temperature from glass, monel or stainless steel supports.

b. At the end of this period, suspend the panels in a humidity cabinet conforming to *ASTM D 1748* for a period of 100 hours, and in such a manner that the drippage from the supports will not fall onto the panels. Maintain the humidity within the cabinet at 100 percent relative humidity and at a dry bulb temperature of 49°C ±2°C for a 100-hour exposure period.

c. Remove the panels from the cabinet, clean them with naphtha and examine them. Panels have failed the protection test if at the end of the test period one of the following conditions exists in the significant areas of the panels as defined by *ASTM D1748*, *figure A1.8,* considering both sides of the panel:

(1) A corroded area of 2-mm diameter or larger

(2) Two or more spots of corrosion between 1 and 2 mm maximum diameter.

d. If more than one panel in five fails the protection test as defined above, a retest will be permitted. Retests shall consist of repeating the protection test using ten additional panels. Reject the lubricating oil if more than four panels fail the test (adding failures of both test and retest).

4.4.5 Stability at low temperature. A 100-ml sample of the oil shall be maintained at or below -54°C for 72 hours in a stoppered flask. At the end of that time there shall be no visual evidence of gelling, separation or crystallization of the oil. Presence of a dense cloud, which does not "settle out" shall not be cause for rejection.

4.4.6 Corrosivity test

4.4.6.1 Preparation of panels (also see *4.4.4.1*).

4.4.6.2 Preparation of steel discs. The following steps shall be performed:

a. Cut three discs 12.5 mm thick from a 25 mm diameter bar stock that conforms to *ASTM A29/A29M*, composition *E52100*.

b. Heat-treat the discs to a hardness of Rockwell C-62. (Rollers that may be obtained from roller bearings with similar chemical, physical and dimensional properties to the above bar stock after heat treatment can be substituted for the formation of the discs). In this case, no additional heat treatment is necessary.

c. Now slowly surface grind on one side to a finish of less than 20 micro-inches rms. If coolant is used during grinding, slush the discs in absolute methanol. Next, abrade the discs on the surface-ground side with successive applications of emery polishing paper grades 1/0, 2/0, 3/0, and finally 4/0. Papers incorporating iron oxide as the polishing medium and wet-dry type papers shall not be used.

d. Wipe the discs clean with sterile absorbent gauze and examine under a 10X magnification for any signs of corrosion or other defects. Do not use defective specimens. Store the discs in a desiccator containing silica gel until ready for use.

4.4.6.3 Preparation of brass clips. The following steps shall be performed:

a. Fabricate clips from commercial 0.6 mm brass sheet conforming to *ASTM B36/B36M* spring temper. The size and shape of the clips are illustrated in *figure 1.*

b. Immerse the clips for 20 seconds in the following etching solution:

450 ml water
300 ml conc. sulfuric acid
225 ml conc. nitric acid
8 ml conc. hydrochloric acid

c. After etching, wash the clips in cold running tap water and then in distilled water. Dry with acetone and store the clips in a desiccator containing silica gel as desiccant until ready for use.

4.4.6.4 Procedure. The following procedures shall be performed:

a. Coat the three discs with the test oil by dipping and stirring the rod in the test oil and allowing the oil from the rod to drop onto the polished side of the discs.

b. Clamp the brass clips over the coated discs and the assemblies and place them in a test chamber, which is maintained at 27°C ±1°C and 50 percent relative humidity, for a period of 10 days. For a 50 percent relative humidity, use a sulfuric acid solution with a density of 1.338 at 20°C.

c. After exposure, remove the assemblies and outline the brass clips on the discs using the clips as templates. Then remove the clips and wipe the test oil from the discs.

d. Examine the discs under 10X magnification for signs of corrosion, pitting or other detrimental effects. If the test results are questionable, repeat the entire test using new specimens, except extend the time period to 20 days. In this case, examine the discs as in the previous manner.

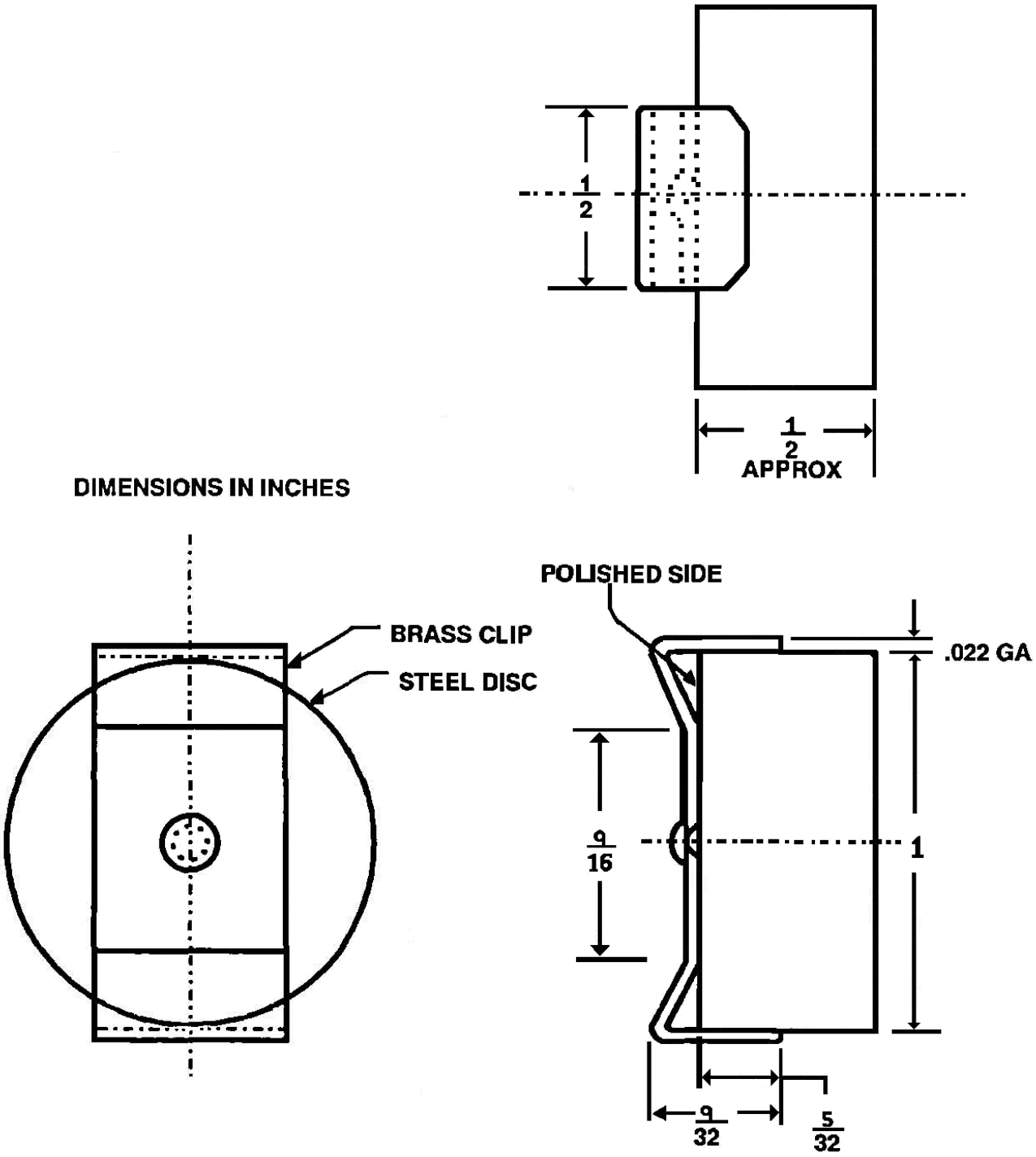

Figure 1. Typical test specimens for corrosivity test

5. PACKAGING

5.1 Packaging. For acquisition purposes, the packaging requirements shall be as specified in the contract or order (see 6.2). When actual packaging of materiel is to be performed by DoD or in-house contractor personnel, these personnel need to contact the responsible packaging activity to ascertain packaging requirements. Packaging requirements are maintained by the Inventory Control Point's packaging activities within the Military Service or Defense Agency, or within the military service's system commands. Packaging data retrieval is available from the managing Military Department's or Defense Agency's automated packaging files, CD-ROM products, or by contacting the responsible packaging activity.

6. NOTES

(This section contains information of a general or explanatory nature that may be helpful, but is not mandatory.)

6.1 Intended use. This oil is intended for use in military aircraft instruments, electronic equipment or where low evaporation oil is required for both high and low temperature application, and where oxidation and corrosion resistance is desirable.

6.2 Acquisition requirements. Acquisition documents should specify the following:

a. Title, number and date of this specification.

b. If required, the specific issue of the individual documents referenced (see *2.1* and *2.2*).

c. Type and size of containers (see *5.1*).

d. Quantity.

e. Selection of applicable levels of packaging and packing with requirements in detail (see *5.1*).

6.2.1 Purchase unit. The instrument oil covered by this specification should be purchased by volume.

6.3 Qualification. With respect to products requiring qualification, awards will be made only for such products as have, prior to the time set for opening of bids, been tested and approved for inclusion in the applicable QPL whether or not such products have actually been so listed by that date. The attention of the suppliers is called to this requirement and manufacturers are urged to arrange to have the products they propose to offer to the Federal Government tested for qualification, in order that they may be eligible to be awarded contracts or orders for the products covered by this specification. The activity responsible for the QPL is AFPA/PTPT, 2430 C Street, Bldg 70, Area B, Wright-Patterson AFB OH 45433. Information pertaining to qualification of products may be obtained from that activity.

6.3.1 Qualification information. It is understood that the material furnished under this specification subsequent to final approval will be of the same composition and will be equal to products upon which approval was originally granted. In the event that the oil furnished under contract is found to deviate from the composition of the approval product, or that the product fails to perform satisfactorily, approval of such products will be subjected to immediate withdrawal from the QPL at the discretion of the approving activity.

6.3.2 Data to accompany qualification samples. The samples will be accompanied by a material safety data sheet and a test report from the manufacturer or a commercial laboratory containing complete information about the source, type of base stock and additive materials used; the formulation and composition of the finished fluid; and laboratory data showing quantitative results of all the tests required by this specification, except storage stability. Separate qualification inspection will be required for each base stock used. The samples will be plainly identified by securely attached durable tags or labels marked with the following information:

Sample for qualification inspection
LUBRICATING OIL; AIRCRAFT INSTRUMENT, LOW VOLATILITY
Specification *MIL-PRF-6085*
Name of manufacturer
Product code number
Date of manufacture

6.3.2.1 Formulation sheet example. An example of a satisfactory form for the formulation sheet indicating the weight percentage and nature of each ingredient:

Oil base stock	percentage
Oxidation inhibitor (manufacturer's name and number)	percentage
Corrosion inhibitor (manufacturer's name and number)	percentage

6.4 Disposal actions

6.4.1 Background. Accumulated waste fluid will be disposed of through a waste oil recovery program unless prohibited by local law. Otherwise, the product will be disposed of in accordance to local law and regulations promulgated by the U.S. Environmental Protection Agency under *Public Law 94-580, Resource Conservation and Recovery Act of 1976*.

6.4.2 Handling and safety precautions. Personnel handling the product will wear appropriate impervious clothing to prevent repeated or prolonged skin contact. Local appraisal is required for exact protective clothing. If skin or clothing becomes moistened with the product, personnel will promptly wash with soap or mild detergent and water. Respirators are not required unless there is an inhalation exposure to mists. Personnel will wear protective clothing when using the product and when cleaning up spills.

6.4.3 Depot-type operations. Additionally, the used product, which has been drained from the hydraulic systems, will be combined with unused, but contaminated fluid from partially full containers and then recycled.

6.4.4 Container disposal. Tops from one-time use containers will be discarded with ordinary refuse. Containers will be made as empty as possible using gravity draining, after which they are to be crushed and buried in a permitted sanitary landfill or incinerated with general refuse. No special decontamination procedures are required for empty containers or their lids.

6.5 International agreements. This specification implements certain provisions of *ASIC Air Standard 15/1* and *NATO STANAG 1135*. When amendment, revision, or cancellation of this specification is proposed, the preparing activity must coordinate the action with the U.S. National Point of Contact for the international standardization agreement, as identified in the ASSIST database at https://assist.daps.dla.mil.

6.6 Subject term (keyword) listing.

Acid number
Flash point
Pour point
Synthetic lubricant

6.7 Definitions.

6.7.1 Bulk lot. A bulk lot (batch) is an indefinite quantity of a homogeneous material mixture offered for acceptance in a single, isolated container or manufactured in a single-plant run (not exceeding 24 hours) through the same processing equipment, with no change in ingredient material.

6.7.2 Packaged lot. A packaged lot is an indefinite number of unit containers of identical size and type, offered for acceptance and filled with a homogeneous material mixture from one isolated container or filled with a material mixture manufactured in a single-plant run (not exceeding 24 hours) through the same processing equipment, with no change in ingredient material.

6.8 Changes from previous issue. Marginal notations are not used in this revision to identify changes with respect to the previous issue due to the extent of the changes. The changes are due to Acquisition Reform initiatives requiring Government specifications to be performance-based.

Custodians:
Army - CR4
Navy - AS
Air Force - 68

Review activities:
Army - MI, SM, AR
Navy - SH, SA OS
DLA – GS

Preparing activity:
Air Force - 68
(Project 9150-2011-012)

Note: The activities listed above were interested in this document as of the date of this document. Since organizations and responsibilities can change, you should verify the currency of the information using the ASSIST Online database at https://assist.daps.dla.mil.