Downloaded from http://www.everyspec.com

INCH-POUND
MIL-PRF-5503F
26 June 1998
SUPERSEDING
MIL-A-5503E
10 January 1986

PERFORMANCE SPECIFICATION

ACTUATORS: AERONAUTICAL LINEAR UTILITY, HYDRAULIC, GENERAL SPECIFICATION FOR

This specification is approved for use by all Departments and Agencies of the Department of Defense.

1. SCOPE

1.1 Scope. This specification establishes the general requirements for hydraulic linear actuators used in any aircraft hydraulic system except for those associated with flight controls.

1.2 Classification. Actuators are of the following types (see 6.2):

Type I - -65° to 160°F temperature range.

Type II - -65° to 275°F temperature range.

2. APPLICABLE DOCUMENTS

2.1 General. The documents listed in this section are cited in sections 3 and 4 of this specification. These lists do not include documents cited in other sections of this specification or recommended for additional information or as examples. While every effort has been made to ensure the completeness of these lists, document users are cautioned that they must meet the requirements specified in the documents cited in sections 3 and 4 of this specification, whether or not they are listed.

Beneficial comments (recommendations, additions, deletions) and any pertinent data that may be of use in improving this document should be addressed to: Oklahoma City Air Logistics Center/TICLA, 3001 Staff Drive, Suite 1AE1-101A, Tinker AFB, OK 73145-3036, by using the Standardization Document Improvement Proposal (DD Form 1426) appearing at the end of this document or by letter.

AMSC N/A FSC 1650

Downloaded from http://www.everyspec.com

2.2 Government documents.

2.2.1 Specifications and standards. The following specifications and standards form a part of this document to the extent specified herein. Unless otherwise specified, the applicable issues of these documents are those listed in the specific issue of the Department of Defense Index of Specifications and Standards (DoDISS) and supplement thereto, cited in the solicitation (see 6.2).

SPECIFICATIONS

DEPARTMENT OF DEFENSE

MIL-H-5440	-	Hydraulic Systems, Aircraft, Design And Installation Requirements For
MIL-H-8775	-	Hydraulic System Components, Aircraft And Missiles, General Specification For
MIL-P-83461	-	Packing, Preformed, Petroleum Hydraulic Fluid Resistant, Improved Performance at 275°F (135°C)
MIL-H-46170	-	Hydraulic Fluid, Rust Inhibited, Fire Resistant Synthetic Hydrocarbon Base
MIL-H-83282	-	Hydraulic Fluid, Fire Resistant, Synthetic Hydrocarbon Base, Aircraft, Metric, NATO Code Number H-537

STANDARDS

DEPARTMENT OF DEFENSE

MS15002	-	Fittings, Lubrication (Hydraulic) Surface Check, Straight Threads, Steel, Type II
MS15006	-	Fittings, Lubrication (Hydraulic) Leakproof, 1/8 Pipe Threads, Steel, Type VI
MS28932	-	Felt Strip, Packing Gland
MS33649	-	Bosses, Fluid Connection - Internal Straight Thread
MS33675	-	Scraper, Installation, Packing Gland Ring

(Unless otherwise indicated, copies of the above specifications and standards are available from the Defense Automated Printing Service, 700 Robbins Avenue, Building 4D, Philadelphia, PA 19111-5094.)

2.3 Non-Government publications. The following documents form a part of this document to the extent specified herein. Unless otherwise specified, the applicable issues of the documents which have been adopted by the DoD are those listed in the specific issue of the DoDISS cited in the solicitation. Unless otherwise specified, the documents not listed in the DoDISS are the issues of the documents cited in the solicitation (see 6.2).

Downloaded from http://www.everyspec.com

AMERICAN NATIONAL STANDARDS INSTITUTE/AMERICAN SOCIETY FOR QUALITY (ANSI/ASQ)

ANSI/ASQ Z1.4 - Sampling Procedures and Tables for Inspection by Attributes (DoD-adopted)

(Application for copies should be addressed to American Society for Quality, P.O. Box 3066, Milwaukee, WI 53201-3066, or to the American National Standards Institute, 11 West 42nd Street, 13th Floor, New York, NY 10036.)

AMERICAN SOCIETY FOR TESTING AND MATERIALS (ASTM)

ASTM B117 - Standard Practice for Operating Salt Spray (Fog) Apparatus (DoD-adopted)

(Application for copies should be addressed to American Society for Testing and Materials, 100 Barr Harbor Drive, West Conshohocken, PA 19428-2959.)

RADIO TECHNICAL COMMISSION FOR AERONAUTICS (RTCA)

RTCA/DO-160 - Environmental Conditions and Test Procedures for Airborne Equipment

(Application for copies should be addressed to Radio Technical Commission for Aeronautics, RTCA Secretariat, 1425 K Street, NW, Suite 500, Washington, D.C. 20005.)

SOCIETY OF AUTOMOTIVE ENGINEERS (SAE)

SAE AS4716 - Gland Design, O-Ring and Other Elastomeric Seals

(Application for copies should be addressed to Society of Automotive Engineers, 400 Commonwealth Drive, Warrendale, PA 15096-0001.)

2.4 Order of precedence. In the event of a conflict between the text of this document and the references cited herein (except for related associated specifications or specification sheets), the text of this document takes precedence. Nothing in this document, however, supersedes applicable laws and regulations unless a specific exemption has been obtained. If there is a conflict between the contents of this specification and an associated specification or specification sheet, the associated specification or specification sheet will apply.

Downloaded from http://www.everyspec.com

3. REQUIREMENTS

3.1 Associated specifications. The individual item requirements shall be as specified herein and in accordance with the associated specification cited in the acquisition document (see 6.2). In the event of any conflict between the requirements of this specification and the acquisition document, the latter shall govern.

3.2 First article. When specified (see 6.2), a sample shall be subject to first article inspection in accordance with 4.2.

3.3 Recycled, recovered, or environmentally preferable materials. Recycled, recovered, or environmentally preferable materials should be used to the maximum extent possible provided that the material meets or exceeds the operational and maintenance requirements, and promotes economically advantageous life cycle cost.

3.4 Materials. All materials shall be suitably treated to resist corrosion due to electrolytic decomposition, salt fog, hydraulic fluid, and any other atmospheric condition that may be encountered during operational use or storage. The use of toxic chemicals, hazardous substances, or ozone depleting chemicals shall be avoided, whenever feasible.

3.5 Construction. (see 6.3.1)

3.5.1 Hydraulic properties. The actuator shall conform to MIL-H-8775 (see 6.3.2).

3.5.2 Fillets. All internal fillets shall have radii at least 0.010 inch or 10% of the minimum wall thickness, whichever is greater.

3.5.3 Wrench flats. If threaded end caps are used, the actuator barrel shall have standard size wrench flats or hexes. Wrench flats or hexes shall be placed as near to the end cap as possible.

3.5.4 Seals. Actuator seals shall be in accordance with MIL-P-83461 and seal glands and O-ring glands shall conform to SAE AS4716.

3.5.5 Bearings. Replaceable bearings or bushings shall be used at all junction points where motion exists. Unless the bearings are self-lubricating or permanently lubricated, lubrication fittings conforming to MS15002 or MS15006 shall be provided.

3.5.6 Scraper and wiper rings. Landing gear strut actuators and utility actuators whose piston rods are exposed to ice, dirt, or other foreign matter shall use scraper rings (see 6.3.8) installed in a groove per MS33675. Actuator rods extended for long periods of time or subjected to high acceleration forces shall be lubricated with felt wipers in accordance with MS28932. The use of felt wipers for temperatures exceeding 200°F shall be as specified in the associated specification. Actuators exposed to extreme sand and dust conditions as defined in the associated specification shall be provided with scraper or wiper rings.

Downloaded from http://www.everyspec.com

3.6 Interface.

3.6.1 Bosses. All bosses for fluid connection fittings shall conform to MS33649. Tube fittings and tubing, if incorporated in the actuator, shall conform to MIL-H-5440.

3.6.2 Hydraulic fluid temperature. The actuator shall function with hydraulic fluid temperatures from -65° to 160°F for type I or -65° to 275°F for type II.

3.6.3 End caps, lock nuts, and adjustment nuts. End caps, lock nuts, and adjustment nuts shall have wrench flats or hexes, be knurled, or contain milled slots for spanner wrenches. If spanner wrench slots are used, they shall be dimensioned in accordance with figure 1. Drilled hole type nuts requiring the use of pin type spanner wrenches shall not be used. End caps, lock nuts, and adjustment nuts, if used, shall not rotate or come loose during operation (see 6.3.3).

3.7 Performance.

3.7.1 Rod bearing length. The rod bearing length shall be at least the diameter of the piston rod. When determining rod or piston head bearing length, the seal glands shall not be considered as a bearing surface.

3.7.2 Piston head bearing area. The piston head bearing area on the barrel wall shall withstand the compression, bending (see 6.3.4), and vibration loads imposed on the actuator during operation as specified in the associated specification.

3.7.3 Ports. All fluid port intersections with internal surfaces of cylinder barrels and end caps shall be perpendicular within 25° unless otherwise specified in the associated specification.

3.7.4 Proof pressure. The actuator shall withstand a pressure equal to 1.5 times the actual differential pressure to be encountered, the proof pressure specified in MIL-H-5440 or the associated specification, whichever is greater, without evidence of leakage from the open port, unless otherwise specified in the associated specification.

3.7.5 Endurance.

3.7.5.1 Normal service actuators (see 6.2). Normal service actuators shall withstand 20,000 operation cycles at 100% of rated pressure.

3.7.5.2 Emergency service actuators (see 6.2). Emergency service actuators shall withstand 2,000 operation cycles at 100% of rated pressure.

3.7.5.3 Pressure impulse cycles. The actuator shall with stand 50,000 cycles of rated impulse pressure conforming to figure 2.

3.7.6 Burst pressure. The actuator shall withstand the burst pressure specified in MIL-H-8775.

Downloaded from http://www.everyspec.com

3.7.7 Rod bearing overlap. The rod bearing overlap (see 6.3.5) of the actuator shall be determined considering all combinations of the actuator weight, acceleration, vibration, and compression loads defined in the associated specification.

3.7.8 Leakage. Leakage shall not exceed the rate of one drop (see 6.4) per packing per 25 cycles of operation at points where motion through external packing exists. There shall be no other external leakage.

3.7.9 Bleeder plugs. When required to conform to MIL-H-5440, bleeder plugs shall be provided.

3.8 Item identification. The actuator shall be permanently and legibly marked with the items specified in the associated specification and the following information:

a. Manufacturer's name.
b. Manufacturer's CAGE code.
c. Manufacturer's part number.
d. Manufacturer's lot number.
e. National Stock Number (NSN).
f. Date of manufacture.
g. Serial number.

3.9 Interchangeability. All parts having the same manufacturer's part number shall be functionally and dimensionally interchangeable.

3.10 Environmental conditions.

3.10.1 Temperature. The actuator shall operate under the following conditions:

a. A low temperature of -65°F.
b. A high temperature of 160°F for type I actuators or 275°F for type II actuators.

3.10.2 Vibration. The actuator shall withstand exposure to the vibration conditions specified in the associated specification.

3.10.3 Sand and dust. The performance of the actuator shall be unaffected by sand and dust.

4. VERIFICATION

4.1 Classification of inspections. The inspection requirements specified herein are classified as follows:

a. First article inspection (see 4.2).
b. Conformance inspection (see 4.3).

Downloaded from http://www.everyspec.com

4.2 First article inspection. First article inspections shall be performed on two samples in accordance with 4.2.1, 4.2.2, and MIL-H-8775.

4.2.1 First article test sample 1. The actuator shall be subjected to the following tests in the order listed:

a. Examination (see 4.6.1).
b. Temperature (see 4.6.11).
c. Sand and dust (see 4.6.12).
d. Salt fog (see 4.6.2).
e. Vibration (see 4.6.5).
f. Leakage (see 4.6.6).

4.2.2 First article test sample 2. The actuator shall be subjected to the following tests in the order listed:

a. Examination (see 4.6.1).
b. Immersion (see 4.6.3).
c. Hydraulic properties (see 4.6.4).
d. Proof pressure (see 4.6.7).
e. Endurance (see 4.6.9).
f. Burst pressure (see 4.6.10).

4.3 Conformance inspection. Conformance inspection shall consist of the following:

a. Individual tests (see 4.3.1).
b. Sampling tests (see 4.3.2).

4.3.1 Individual tests. Each actuator shall be subjected to the following tests:

a. Examination (see 4.6.1).
b. Leakage (see 4.6.6).
c. Proof pressure (see 4.6.8).

4.3.2 Sampling tests. Actuators shall be sampled according to ANSI/ASQ Z1.4 at the inspection level (normal, tightened, or reduced) specified in the acquisition document (see 6.2).

4.4 Test conditions.

4.4.1 Test fluid. Unless otherwise specified by the associated specification, all first article tests shall be performed with hydraulic fluid conforming to MIL-H-83282. Conformance tests shall be conducted with hydraulic fluid conforming to MIL-H-46170 or MIL-H-83282.

Downloaded from http://www.everyspec.com

4.4.2 Temperatures. Unless otherwise specified in the associated specification, the tests shall be conducted at ambient temperatures between 50° and 110°F with hydraulic fluid temperatures from 70° to 130°F.

4.5 Requirements cross-reference matrix. Table I provides a cross reference matrix of the section 3 requirements tested or verified in the paragraphs below.

TABLE I. Requirements cross-reference matrix

Requirement	Verification	Requirement	Verification
3.2	4.2	3.7.4	4.6.7, 4.6.8
3.4	4.6.1, 4.6.2, 4.6.3	3.7.5.1	4.6.9.1
3.5.1	4.6.4	3.7.5.2	4.6.9.1
3.5.2	4.6.1	3.7.5.3	4.6.9.2
3.5.3	4.6.1	3.7.6	4.6.10
3.5.4	4.6.1	3.7.7	4.6.1
3.5.5	4.6.1	3.7.8	4.6.6
3.5.6	4.6.1	3.7.9	4.6.1
3.6.1	4.6.1	3.8	4.6.1
3.6.2	4.6.3	3.9	4.6.1
3.6.3	4.6.1, 4.6.5	3.10.1	4.6.11
3.7.1	4.6.1	3.10.2	4.6.5
3.7.2	4.6.5, 4.6.6	3.10.3	4.6.12
3.7.3	4.6.1		

4.6 Tests.

4.6.1 Examination. The actuator shall be examined for compliance with the requirements for materials, fillets, wrench flats, seals, bearings, scraper and wiper rings, bosses, end caps, locknuts, adjustment nuts, rod bearing length, ports, rod bearing overlap, interchangeability, and item identification.

4.6.2 Salt fog. The actuator shall be subjected to the salt fog test in ASTM B117 for 50 hours. The actuator shall then be subjected to the leakage test.

4.6.3 Immersion. Type I actuators containing nonmetallic parts, other than standard seals and backup rings in glands conforming to SAE AS4716, shall be immersed in hydraulic fluid for seven days at 160°±2°F. Type II actuators containing nonmetallic parts shall be immersed in hydraulic fluid for 72 hours at 275°±5°F. The actuator shall then be subjected to the individual tests.

4.6.4 Hydraulic properties. The actuator shall be tested in accordance with MIL-H-8775.

4.6.5 Vibration. The actuator shall be subjected to the vibration test in RTCA/DO-160 at the levels specified in the associated specification.

Downloaded from http://www.everyspec.com

4.6.6 Leakage. The actuator shall be cycled with the piston unrestrained for at least 100 cycles. Pressure shall build up to system pressure at the end of each stroke. Leakage at points where motion through external packing exists shall not exceed the rate of one drop per packing per 25 cycles of operation. Leakage from any other area shall be less than a drop.

4.6.7 Proof pressure (first article only). The actuator shall be restrained and pressurized in one or more of its critical positions, as specified in the associated specification, as a column with the piston not bottomed. In each of these positions, 5 psi shall be applied for 5 minutes with the opposite port open to atmosphere and oriented with the open port pointed down. Then a pressure equal to 1.5 times the actual differential pressure to be encountered (that corresponding to the maximum external piston load, including externally induced loads which may be in excess of those resulting from application of actuating pressure) shall be applied for 5 minutes with the opposite ports opened to atmosphere and oriented with the open port pointed down. Leakage shall be less than a drop. There shall be no loosening, permanent deformation, or rupture of any parts of the actuator.

4.6.8 Proof pressure (conformance only). The actuator shall be subjected to a pressure of 5 psi and a proof pressure of 150 ± 5% of the operating pressure defined in MIL-H-5440 or the associated specification for a period of 3 minutes for each pressure application. These pressures shall be applied to each port with the opposite ports open to atmosphere and the piston bottomed at the opposite end. Leakage shall be less than a drop. There shall be no loosening, permanent deformation, or rupture of parts of the assembly.

4.6.9 Endurance.

4.6.9.1 Cyclic endurance. The actuator shall be subjected to cyclic operation according to table II. The test shall simulate the loads and duplicate the swiveling and bending loads occurring during the operation of the actuator when installed in the aircraft. The pressures within the actuator shall be those encountered during operation. The actuators shall be cycled against full design external loading including the load-stroke curve specified in the associated specification, and with pressure buildup at the end of each stroke to system design operating pressure. At the completion of this test, leakage at each external packing gland shall not exceed the rate of one drop per 25 cycles of actuation. Interport leakage in the proof pressure test shall not exceed one drop per minute unless otherwise specified by the associated specification.

TABLE II. Endurance test conditions

	Normal service actuators	Emergency actuators
Temperature	See note	See note
Number of full stroke cycles	20,000	2,000
NOTE: The temperature shall be 160°F or 275°F (see 1.2).		

Downloaded from http://www.everyspec.com

4.6.9.2 Pressure impulse. Each actuator shall withstand 50,000 cycles of rated impulse pressure conforming to figure 2 with the piston bottomed in both the extended and retracted positions. Unless otherwise specified, there shall be no leakage. There shall be no loosening, permanent deformation, or rupture of the actuator. The maximum cycling rates shall be 300 cycles per minute and the cycle rate shall be constant. The pressure rise shall be between 200,000 and 300,000 psi per second.

4.6.10 Burst pressure. The actuator shall be subjected to increasing pressure at a rate not to exceed 25,000 psi per minute until the burst pressure specified in MIL-H-5440 is reached. The actuator shall not rupture before the minimum burst pressure is reached.

4.6.11 Temperature.

4.6.11.1 Low temperature. The actuator shall be connected to a hydraulic fluid source with a static head of 1 to 3 feet at -65°F for 3 hours after stabilizing the temperature of the actuator. While maintaining the temperature at -65°F, the actuator shall be subjected to five complete cycles with pressure buildup to operating pressure at the end of each stroke. Leakage shall not exceed two drops at each external packing gland during this cycling, and mating parts shall not bind (see 6.3.6).

4.6.11.2 Intermediate temperatures. Immediately following the low temperature test, the actuator shall be warmed from -65° to 160°F for type I or 275°F for type II, while being continuously cycled through complete strokes at maximum increments of 36°F to determine satisfactory operation throughout the temperature range. Cycling shall be performed without waiting for the temperature to stabilize. The actuator shall not bind.

4.6.11.3 High temperature. The actuator assembly shall be connected to a hydraulic fluid source with a static head of 1 to 3 feet, and subjected to a temperature of 160°F for type I or 275°F for type II, for 2 hours following temperature stabilization. The actuator shall be subjected to five complete cycles with pressure buildup to operating pressure at the end of each stroke. There shall be no binding or leakage.

4.6.12 Sand and dust. The actuator shall be subjected to the sand and dust test in RTCA/DO-160.

5. PACKAGING

5.1 Packaging. For acquisition purposes, the packaging requirements shall be as specified in the contract or order (see 6.2). When actual packaging of materiel is to be performed by DoD personnel, these personnel need to contact the responsible packaging activity to ascertain requisite packaging requirements. Packaging requirements are maintained by the Inventory Control Point packaging activity within the Military Department or Defense Agency, or within the Military Department's System Command. Packaging data retrieval is available from the managing Military Department or Defense Agency automated packaging files, CD-ROM products, or by contacting the responsible packaging activity.

Downloaded from http://www.everyspec.com

6. NOTES

(This section contains information of a general or explanatory nature which may be helpful, but is not mandatory.)

6.1 Intended use. The actuators covered by this specification are intended for use in aeronautical hydraulic systems covered by MIL-H-5440 to actuate such individual units as landing gears and bomb bay doors. The complete actuator assembly may incorporate other components, such as check valves, solenoid valves, bypass valves, and pressure switches, in addition to the actuator. The actuator may be controlled by mechanical linkage, electrical means, or direct hydraulic power.

6.2 Acquisition requirements. Acquisition documents must specify the following:

a. Title, number, and date of this specification.
b. Type of actuator required (see 1.2).
c. Issue of the DoDISS to be cited in the solicitation, and if required, the specific issue of individual documents referenced (see 2.2).
d. Associated specifications (see 3.1).
e. When first article is required (see 3.2).
f. Sampling level (see 4.3.2).
g. Packaging requirements (see 5.1).
h. Data required.

6.3 Guidance.

6.3.1 General.

6.3.1.1 Cylinder-barrels. The cylinder barrels of actuating cylinders were previously manufactured from steel or aluminum alloy forgings produced by hollow forging without flash formation or from steel seamless tubing or bar stock. When aluminum alloy cylinders were used with steel pistons, the bearing areas of the piston head was chrome plated. Both the internal and the external surfaces of aluminum cylinders were shot peened or roller burnished to produce a compressive residual stress pattern. Light honing, not exceeding 20% of the depth of the compressive zone resulting from shot peeing, was permitted to obtain final dimensions and surface finish requirements. Exceptions to the compression requirements were materials which were demonstrated to be as free from susceptibility to stress corrosion cracking as 7075 (T73 heat treat) aluminum alloy. Pistons fabricated with other than chromium plated steel were used with aluminum-alloy cylinder barrels if data could substantiate adequate service life expectancy and protection from corrosion, including corrosion during storage periods. Aluminum alloy was not used on the bearing surface of the piston head.

6.3.1.2 Surface plating. All chromium plating used on piston rods or sliding surfaces was in accordance with Class 2 of QQ-C-320. Other surface coatings were also used provided prior approval of such coating was obtained from the acquisition activity.

Downloaded from http://www.everyspec.com

6.3.1.3 Finish. Members such as piston rods, cylinder bores, and other gland diameters were previously held to the surface finish as specified in AS4716. The surface finish increments and specification were as specified in ANSI/ASME B46.1. Piston rods and all other wear surfaces were sufficiently hard and corrosion resistant to ensure adequate service life.

6.3.1.4 Dashpot. When a dashpot was built into an actuator, an analysis was made to ensure sufficient structural strength resulting from high hydraulic pressures encountered during operation. The use of packings or seals was avoided when possible.

6.3.2 Hydraulic properties. Loss of strength due to degradation of materials after exposure to high temperatures was considered in the design of the previous actuators. Rod ends, bearings, and jam nuts are operated in a different environment than the actuator; therefore, the operating, atmospheric environment was considered in the design and testing of these actuator components.

6.3.3 End caps, lock nuts, and adjustment nuts. In the past, lockwire was used to prevent end caps, lock nuts, and adjustment nuts from rotating or loosening during operation

6.3.4 Bending loads. Self-aligning ball bearings, plain spherical bearings, or universal joints were used in end connections to remove any bending loads.

6.3.5 Rod bearing overlap. The rod bearing overlap is the distance between the extreme faces of the rod bearing and the piston bearing when the piston is fully extended.

6.3.6 Binding. Binding may be checked by comparing the pressure required to cycle under no load at room temperature, and at -65°F. These values are approximately the same if cycling is conducted at velocities that permit viscous shear forces to remain approximately equal.

6.3.7 Additional items.

6.3.7.1 Fatigue critical components. The fatigue critical components were determined using full size component fatigue tests.

6.3.7.2 Bleeder plugs. Previous types of bleeder plugs were AN814 plugs or AN6304 valves installed in boss conforming to AND10067 or MS33649. Other types were used subject to approval of the acquisition activity.

6.3.7.3 Part joining. Welding, hydrogen brazing, or other approved methods were used to join parts provided adequate strength in such joints was shown by subsequent tests. Sweat soldered threaded connections were not used to join any parts. Threaded joints which transmitted reversing loads were securely locked in the assembled position to prevent loss of torque in the connection due to load reversal. Use of lockwire alone was not used as a positive locking means. Jam nuts were not used as a positive locking means unless lockwired or otherwise retained.

6.3.7.4 High stress parts. High stress parts include, but are not limited to, end caps, piston heads, piston rods and locks.

Downloaded from http://www.everyspec.com

6.3.7.5 Nondestructive inspection. Highly stressed parts such as end caps, piston heads and rods, locks, and others manufactured from magnetic materials were subject to magnetic inspection in accordance with ASTM E 444. Cracks or other injurious defects were cause for rejection. Non-magnetic parts were inspected in accordance with ASTM E 1417. Harmful discontinuities were cause for rejection. Fusion weldments inspected by x-ray in accordance with ASTM E 1742 showing lack of penetration or fusion, cracks in parent metal or weld, underbead crater, burn-through, sharp weld edge, elongated metallic or nonmetallic inclusions were rejected. Linear porosity and undercut in high-stress areas were cause for rejection. Diameters of scattered porosity and round inclusions in high-stress areas could exceed one-fifth of the metal thickness to a maximum defect image of 0.060 inches, with a distance between defects of at least eight defect diameters, or a minimum of 0.12 inches, and could not exceed three defects per inch of weld. In low-stress areas, the distance between gas pores or inclusions was at least six defect diameters or a minimum of 0.090 inches and could not exceed five defects per inch of weld. Film density was 2.5 ± 0.2. The maximum defect allowable in ultrasonic testing was a flat bottom 1/32 inches in diameter, using 5 megacycles.

6.3.7.6 Finish of sliding members. The smoothness of finish on sliding surfaces, such as actuator bores and piston rods, was determined with a profilometer, brush surface analyzer, or other equipment such as a surface roughness comparison sample, provided the accuracy of the measuring equipment was within 10% of the required value.

6.3.8 Scrapers. In the past, scraper rings conformed to MS28776.

6.4 Drop. Twenty drops is the equivalent of one cubic centimeter.

6.5 Subject term (key word) listing.

Bleeder plugs
Dashpot
Rod bearings
Scrapers

6.6 Changes from previous issue. Asterisks are not used in this revision to identify changes with respect to the previous issue due to the extensiveness of the changes.

Downloaded from http://www.everyspec.com

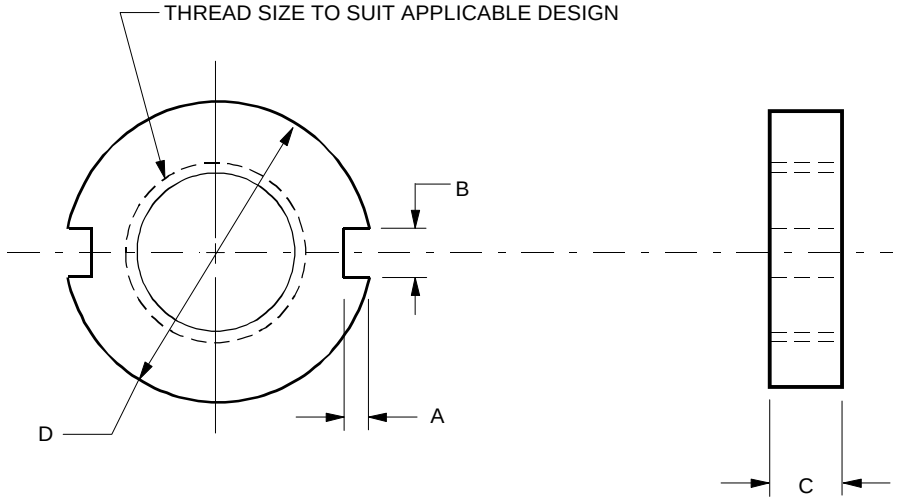

DIAMETER “D”	MINIMUM “A”	MINIMUM “B”	“MINIMUM “C”
3/4 to 2	0.120	0.120	1/4
1-3/4 to 4	0.120	0.190	5/16
3-1/2 to 6	0.190	0.250	3/8
NOTE: All dimensions are in inches.			

FIGURE 1. Dimensions for end caps and lock nuts for use with spanner wrenches.

Downloaded from http://www.everyspec.com

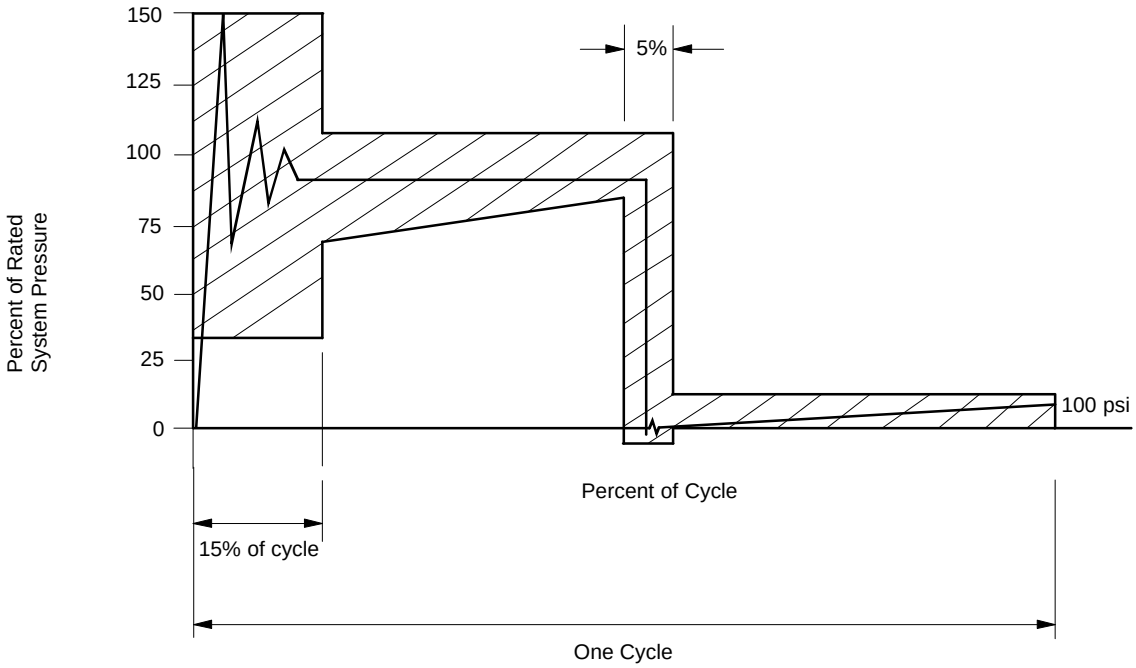

FIGURE 2. Pressure impulse cycle

Custodians:
Army - AV
Navy - AS
Air Force - 71

Review Activities:
Air Force - 99

Preparing Activity:
Air Force - 71

Project 1650-0614

Downloaded from http://www.everyspec.com

STANDARDIZATION DOCUMENT IMPROVEMENT PROPOSAL

INSTRUCTIONS

1. The preparing activity must complete blocks 1, 2, 3, and 8. In block 1, both the document number and revision letter should be given.
2. The submitter of this form must complete blocks 4, 5, 6, and 7.
3. The preparing activity must provide a reply within 30 days from receipt of the form.

NOTE: This form may not be used to request copies of documents, nor to request waivers, or clarification of requirements on current contracts. Comments submitted on this form do not constitute or imply authorization to waive any portion of the referenced document(s) or to amend contractual requirements.

I RECOMMEND A CHANGE:	**1. DOCUMENT NUMBER** MIL-PRF-5503F	**2. DOCUMENT DATE**

3. DOCUMENT TITLE
Actuators: Aeronautical Linear Utility, Hydraulic, General Specification For

4. NATURE OF CHANGE *(Identify paragraph number and include proposed rewrite, if possible. Attach extra sheets as needed.)*

5. REASON FOR RECOMMENDATION

6. SUBMITTER

a. NAME *(Last, First, Middle Initial)*	b. Organization	
c. ADDRESS *(Include zip code)*	**d. TELEPHONE** *(Include Area Code)* (1) Commercial (2) DSN *(if applicable)*	**7. DATE SUBMITTED (YYMMDD)**

8. PREPARING ACTIVITY

a. NAME	**b. TELEPHONE**
Harlena Edwards	(1) Commercial 405-736-5960 (2) DSN 336-5960
c. ADDRESS OC-ALC/TICLA 3001 Staff Drive, Suite 1AE1-101A Tinker AFB, OK 73145-3036	**IF YOU DO NOT RECEIVE A REPLY WITHIN 45 DAYS, CONTACT:** **Defense Quality and Standardization Office** **5203 Leesburg Pike, Suite 1403, Falls Church, VA 22041-3466** **Telephone (703) 756-2340 DSN 289-2340**