Downloaded from http://www.everyspec.com

INCH-POUND
MIL-PRF-20K
14 November 2003
SUPERSEDING
MIL-PRF-20J
28 January 2003

PERFORMANCE SPECIFICATION

CAPACITOR, FIXED, CERAMIC DIELECTRIC, (TEMPERATURE COMPENSATING), ESTABLISHED RELIABILITY AND NON-ESTABLISHED RELIABILITY, GENERAL SPECIFICATION FOR

This specification is approved for use by all Departments and Agencies of the Department of Defense.

1. SCOPE

1.1 Scope. This specification covers the general requirements for established reliability (ER) and non-ER, temperature compensating, fixed capacitors for use primarily where compensation is necessary for circuit applications due to temperature changes, in bypass and coupling applications. Capacitors meeting the ER requirements specified herein have a failure rate level (FRL) ranging from 1.0 percent per 1,000 hours to 0.00l percent per 1,000 hours. These failure rate levels are established at a 90-percent confidence level based on the life test parameters specified and are maintained at a 10-percent producer's risk. An acceleration factor of 8:1 has been used to relate the life test data at 200 percent of rated voltage at the applicable high test temperature to the rated voltage at the applicable high test temperature. A part per million (ppm) quality system is used for documenting and reporting the average outgoing quality of ER capacitors supplied to this specification. Statistical process control (SPC) techniques are required in the manufacturing process to minimize variation in production of ER capacitors supplied to the requirements of this specification.

1.2 Classification.

1.2.1 Part or Identifying Number (PIN). Capacitors specified herein (see 3.1) are identified by a PIN that consists of the basic number of the performance specification sheet followed by a series of coded characters. Each performance specification sheet covers a different capacitor style. The coded number provides information concerning the capacitors' characteristic, capacitance value, capacitance tolerance, and product level. The PIN is in the following form:

ER	CCR75	CH	1R0	C	M	V
	Style (1.2.1.1)	Characteristic (1.2.1.2)	Capacitance value (1.2.1.3)	Capacitance tolerance (1.2.1.4)	Product level designator (1.2.1.5)	Standoff option (1.2.1.6)

NON-ER	CC75	CH	1R0	C
	Style (1.2.1.1)	Characteristic (1.2.1.2)	Capacitance value (1.2.1.3)	Capacitance tolerance (1.2.1.4)

* Comments, suggestions, or questions on this document should be addressed to: Defense Supply Center, Columbus, DSCC-VAT, Post Office Box 3990, Columbus, OH 43216-5000 or e-mailed to capacitorfilter@dscc.dla.mil. Since contact information can change, you may want to verify the currency of this address information using the ASSIST Online database at www.dodssp.daps.mil.

AMSC N/A FSC 5910
DISTRIBUTION STATEMENT A. Approved for public release; distribution is unlimited.

Downloaded from http://www.everyspec.com

1.2.1.1 Style The style is identified by either the three-letter symbol "CCR" (ER parts) or by the two-letter symbol "CC" (non-ER parts) followed by a two-digit number. The letters identify temperature compensating, ceramic dielectric, fixed capacitors, and the number identifies the shape and dimensions of the capacitor.

1.2.1.2 Characteristic. The characteristic is identified by a two-letter symbol in accordance with table I. The first letter identifies the nominal temperature coefficient; the second letter identifies the approximate tolerance envelope for the temperature coefficient (G = 30 ppm/°C; H = 60 ppm/°C; J = 120 ppm/°C; and K = 250 ppm/°C) (see figure 1 and 6.5).

TABLE I. Characteristic.

Symbol	Nominal temperature coefficient
CG	0 ±30 ppm/°C
CH	0 ±60 ppm/°C
CJ	0 ±120 ppm/°C
CK	0 ±250 ppm/°C
CX	Not practically measurable

1.2.1.3 Capacitance. The nominal capacitance value expressed in picofarads (pF) is identified by a three-digit number; the first two digits represent significant figures and the last digit specifies the number of zeros to follow. When the nominal value is less than 10 pF, the letter "R" indicates the decimal point and the succeeding digit(s) of the group represent significant figure(s). For example, 1R0 indicates 1.0 pF; R75 indicates 0.75 pF; and 0R5 indicates 0.5 pF.

1.2.1.4 Capacitance tolerance. The capacitance tolerance is identified by a single letter in accordance with table II.

TABLE II. Capacitance tolerance.

Symbol	Capacitance tolerance
B	±0.1 pF
C	±0.25 pF
D	±0.5 pF
F 1/	±1 percent
G 1/	±2 percent
J	±5 percent
K	±10 percent

* 1/ For nominal capacitance of 10 pF or less, the capacitance tolerances are ±1.0 pF (F) and ±2.0 pF (G).

1.2.1.5 Product level designator. The product level designation in percent per 1,000 hours is identified by a single letter in accordance with table III. This is also known as the failure rate level (FRL).

TABLE III. Product level designator.

Symbol	Product level (percent per 1,000 hours)
M	1.0
P	0.1
R	0.01
S	0.001

Downloaded from http://www.everyspec.com

* 1.2.1.6 Standoff option. When applicable (see 3.1), the symbol "V" indicates the standoff mounting configuration.

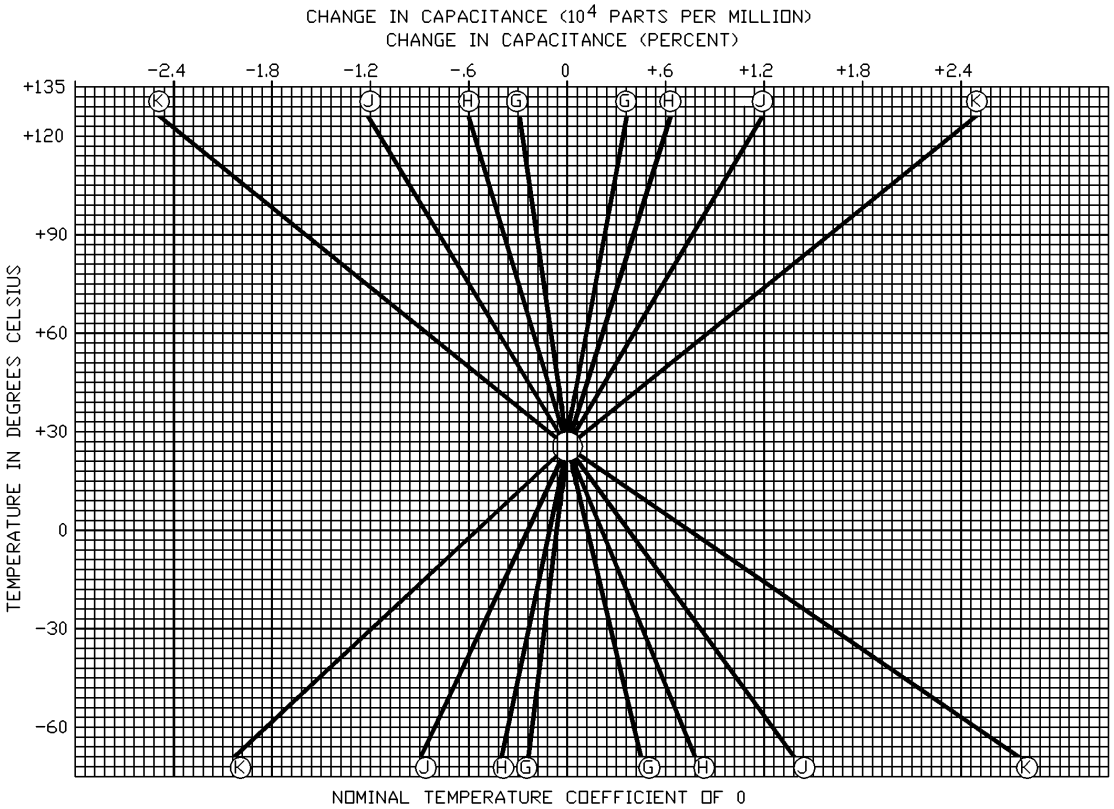

FIGURE 1. Tolerance envelopes.

2. APPLICABLE DOCUMENTS

2.1 General. The documents listed in this section are specified in sections 3 and 4 of this specification. This section does not include documents cited in other sections of this specification or recommended for additional information or as examples. While every effort has been made to ensure the completeness of this list, document users are cautioned that they must meet all specified requirements documents cited in sections 3 and 4 of this specification, whether or not they are listed.

2.2 Government documents.

* 2.2.1 Specifications. standards. and handbooks. The following specifications, standards, and handbooks form a part of this document to the extent specified herein. Unless otherwise specified, the issues of these documents are those cited in the solicitation or contract (See 6.2).

DEPARTMENT OF DEFENSE SPECIFICATIONS

(See Supplement 1 for list of associated specification sheets.)

Downloaded from http://www.everyspec.com

DEPARTMENT OF DEFENSE STANDARDS

MIL-STD-202	-	Test Method Standard Electronic and Electrical Component Parts.
MIL-STD-690	-	Failure Rate Sampling Plans and Procedures.
MIL-STD-790	-	Standard Practice for Established Reliability and High Reliability Qualified Products List (QPL) Systems for Electrical, Electronic, and Fiber Optic Parts Specifications.
MIL-STD-810	-	Environmental Engineering Considerations and Laboratory Tests.
MIL-STD-1285	-	Marking of Electrical and Electronic Parts.

* (Copies of these documents are available online at http://assist.daps.dla.mil/quicksearch/ or www.dodssp.daps.mil or from the Standardization Document Order Desk, 700 Robbins Avenue, Building 4D, Philadelphia, PA 19111-5094.)

2.3 Non-Government publications. The following documents form a part of this document to the extent specified herein. Unless otherwise specified, the issues of the documents are those cited in the solicitation or contract (see 6.2).

ELECTRONIC INDUSTRIES (EIA)

EIA-554-1	-	Assessment of Average Outgoing Quality Levels in Parts Per Million (ppm). (DoD adopted).
EIA-557	-	Statistical Process Control Systems. (DoD adopted).

(Copies of these documents are available from http://global.ihs.com or Global Engineering Documents, Attn: Customer Service Department, 15 Inverness Way East, Englewood CO 80112-5776.)

2.4 Order of precedence. In the event of a conflict between the text of this document and the references cited herein (except for related associated detail specifications, specification sheets, or MS sheets), the text of this document takes precedence. Nothing in this document, however, supersedes applicable laws and regulations unless a specific exemption has been obtained.

3. REQUIREMENTS

3.1 Specification sheets. The individual item requirements shall be as specified herein and in accordance with the applicable specification sheets. In the event of any conflict between requirements of this specification and the specification sheet, the latter shall govern (see 6.2).

3.2 Qualification. Capacitors and retainers furnished under this specification shall be products that are authorized by the qualifying activity for listing on the applicable qualified products list (QPL) before contract award (see 4.4 and 6.3). Authorized distributors that are approved to MIL-STD-790 distributor requirements by QPL manufacturers are listed in the QPL.

3.3 Qualified Products List (QPL) system. The manufacturer shall establish and maintain a QPL system for parts covered by this specification. Requirements for this system are specified in MIL-STD-690 and MIL-STD-790. In addition, the manufacturer shall establish a Statistical Process Control (SPC) and Part Per Million (PPM) system which meets the requirements of 3.3.1 and 3.3.2, respectively.

3.3.1 SPC system. As part of the overall MIL-STD-790 QPL system, the manufacturer shall establish a SPC system that meets the requirements of EIA-557. Typical manufacturing processes for application of a SPC include, but are not limited to the following: Application of termination, assembly, chip firing, green chip assembly, dielectric material manufacture, and packaging.

3.3.2 PPM system. As part of the overall MIL-STD-790 QPL system, the manufacturer shall establish a PPM system for assessing the average outgoing quality of lots in accordance with EIA-554-1. Data exclusion, in accordance with EIA-554-1, may be used with approval of the qualifying activity. The PPM system shall identify the PPM rate at the end of each month and shall be based on a six month moving average.

Downloaded from http://www.everyspec.com

3.4 Material. The material shall be as specified herein. However, when a definite material is not specified, a material shall be used that will enable the capacitors to meet the performance requirements of this specification. Acceptance or approval of any constituent material shall not be construed as a guarantee of the acceptance of the finished product.

3.4.1 Insulating and impregnating compounds. Insulating and impregnating compounds, including resins, varnishes, waxes, and the like, shall be suitable for each particular application. Compounds shall preserve the electrical characteristics of the insulation to which they are used.

3.5 Interface and physical dimensions. Capacitors shall meet the interface requirements and physical dimensions specified (see 3.1).

3.5.1 Case. Each capacitor shall be effectively sealed against the entry of moisture. When a molded case is specified (see 3.1), the capacitor element shall be enclosed via transfer molding or the use of a pre-formed case. When a conformal (dipped) case is specified (see 3.1), the capacitor element shall be enclosed within insulating resin, plastic, or ceramic.

3.5.2 Connections. Electrical connections shall not depend on wires, lugs, terminals, and the like, that are clamped between a metallic member and an insulating material other than the ceramic material. Such connections shall be soldered or shall be clamped between metallic members.

3.5.2.1 Tin plated finishes. Tin plating is prohibited as a final finish or as an undercoat. Tin-lead (Sn-Pb) finishes are acceptable provided that the minimum lead content is three percent.

3.5.2.2 Solder dip (retinning). The manufacturer may solder dip/retin the leads of product supplied to this specification, provided that the solder dip process has been approved by the qualifying activity using the requirements of the appendix of this specification.

3.6 Thermal shock and voltage conditioning (ER parts only). When tested as specified in 4.7.2, capacitors shall withstand the extremes of high and low temperature without visible damage and meet the following requirements:

a. Dielectric withstanding voltage (DWV) (at +25°C): Shall be as specified in 3.9. Not applicable if optional voltage conditioning was performed at or above 300 percent of rated voltage.

b. Insulation resistance (at +25°C): Shall not be less than the value shown on figure 2. NOTE: This step may be skipped if +125°C IR is performed with +25°C limits.

c. Insulation resistance (at +125°C): Shall not be less than the value shown on figure 2.

d. Capacitance (at +25°C): Shall be within the tolerance specified (see 3.1).

e. Dissipation factor (at +25°C): Shall not exceed the initial requirement (see 3.8).

Downloaded from http://www.everyspec.com

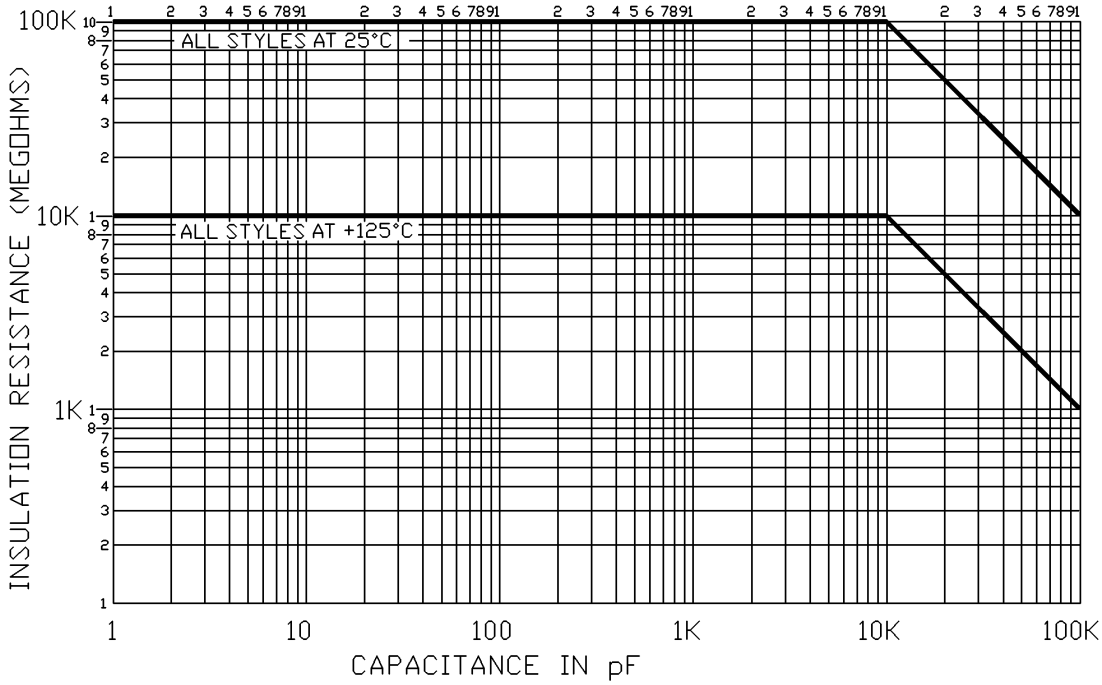

FIGURE 2. Insulation resistance versus capacitance.

3.7 Capacitance. When measured as specified in 4.7.3, the capacitance shall be within the specified tolerance (see 3.1).

3.8 Dissipation factor. When determined as specified in 4.7.4, the dissipation factor shall not exceed the percent specified on figure 3. Due to the limitations of measuring equipment, capacitances of less than 30 pF appear to have a high dissipation factor, as shown in figure 3.

3.9 Dielectric withstanding voltage. When tested as specified in 4.7.5, capacitors shall withstand the dc potential without damage or breakdown.

3.10 Barometric pressure (qualification only). When tested as specified in 4.7.6, capacitors shall withstand the dc potential without flashover.

3.11 Insulation resistance. When measured as specified in 4.7.7, the insulation resistance at +25°C shall be not less than the value specified in figure 2.

3.12 Temperature coefficient and capacitance drift (see 4.7.8).

3.12.1 Temperature coefficient. Unless otherwise specified (see 3.1), the capacitor-temperature curve shall lie within the tolerance envelope as shown in figure 1 (see 6.5). The temperature coefficient in ppm/°C can be calculated with the following equation:

$$\text{Temperature coefficient (ppm/°C)} = \frac{C_2 - C_1}{C_1 (T_2 - T_1)} \times 10^6$$

where: C_2 = Capacitance at test temperature
C_1 = Capacitance at +25°C
T_2 = Test temperature
T_1 = +25°C

Downloaded from http://www.everyspec.com

3.12.2 Capacitance drift. The capacitance drift shall be within ±0.2 percent or ±0.05 pF, whichever is greater.

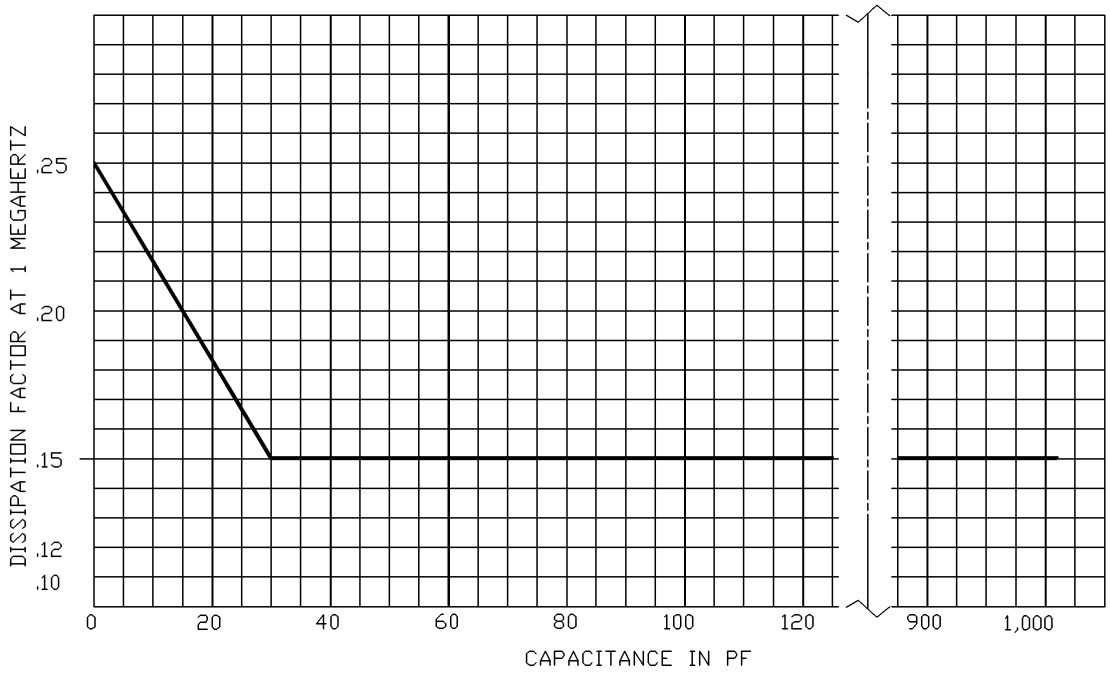

FIGURE 3. Maximum dissipation factor values.

3.13 Shock, specified pulse. When capacitors are tested as specified in 4.7.9, there shall be no momentary or intermittent contact of 0.5 millisecond (ms) or greater duration, open-circuiting or short-circuiting, or other evidence of mechanical damage.

3.14 Vibration, high frequency. When capacitors are tested as specified in 4.7.10, there shall be no momentary or intermittent contact of 0.5 ms or greater duration, open-circuiting or short-circuiting, or other evidence of mechanical damage; and capacitors shall meet the following requirements:

a. Capacitance: Shall not change more than ±2.0 percent or ±0.5 pF (0.25 pF for values less than 10 pF), whichever is greater, from the initial value as measured in 4.7.3.

b. Dissipation factor: Shall not exceed initial requirement.

c. Dielectric withstanding voltage: Shall be as specified in 3.9.

d. Insulation resistance: Shall be as specified in 3.11.

3.15 Thermal shock and immersion. When tested as specified in 4.7.11, capacitors shall meet the following requirements:

a. Visual examination: No evidence of corrosion or mechanical damage.

b. Capacitance change: Shall change not more than ±3 percent or ±0.5 pF (0.25 pF for values less than 10 pF), whichever is greater, from the initial value as measured in 4.7.3.

Downloaded from http://www.everyspec.com

c. Dissipation factor: Shall not exceed initial requirement.

d. Dielectric withstanding voltage: As specified in 3.9.

e. Insulation resistance: Not less than 50 percent of the initial requirement.

3.16 Terminal strength (direct load). When capacitors are tested as specified in 4.7.12, the terminals shall not loosen or rupture, and there shall be no other damage to the terminals or capacitor body.

3.17 Resistance to soldering heat. When tested as specified in 4.7.13, capacitors shall meet the following requirements:

a. Insulation resistance at +25°C: Unless otherwise specified (see 3.1), not less than the initial +25°C requirement.

b. Capacitance: Shall not change more than ±3.0 percent from the initial measured value.

c. Dissipation factor: Shall not exceed the initial requirements.

3.18 Moisture resistance. When tested as specified in 4.7.14, capacitors shall meet the following requirements:

a. Visual examination: No evidence of corrosion or mechanical damage.

b. Capacitance: Change not to exceed ±3 percent or ±0.5 pF (±0.25 pF for values less than 10 pF), whichever is greater, from initial measured value obtained as specified in 4.7.3.

c. Dielectric withstanding voltage: As specified in 3.9.

d. Insulation resistance: Not less than 30 percent of the initial requirement.

3.19 Solderability. When capacitors are tested as specified in 4.7.15, the dipped surface of the leads shall be at least 95 percent covered with a new, smooth, solder coating. The remaining 5 percent may contain only small pinholes or rough spots; these shall not be concentrated in one area. In case of dispute, the percent of coverage with pinholes or rough spots shall be determined by actual measurement of these areas, as compared to the total area.

3.20 Resistance to solvents (ink marking only). When capacitors are tested as specified in 4.7.17, there shall be no evidence of mechanical damage and the marking shall remain legible.

3.21 Radiographic inspection (for qualification and FRL "S"). When capacitors are tested as specified in 4.7.18, radiographic examination shall not disclose evidence of improperly made connections, substandard soldering or structural weakness, or attached solder particles or slivers.

* 3.22 Fungus. The manufacturer shall certify that all external materials are fungus resistant or shall perform the test as specified in 4.7.19. When capacitors are tested as specified in 4.7.19, there shall be no evidence of fungus growth on the external surface.

3.23 Life (at elevated ambient temperature). When tested as specified in 4.7.20, capacitors shall meet the following requirements:

a. Visual examination: No evidence of corrosion or mechanical damage.

* b. Capacitance: Shall not change more than ±3.0 percent or ±0.5 pF (±0.25 pF for values less than 10 pF), whichever is greater, from the initial value obtained as specified in 4.7.3.

c. Dissipation factor: Shall not exceed initial requirement.

d. Insulation resistance: Shall not be less than 50 percent of the initial requirement.

Downloaded from http://www.everyspec.com

3.24 Marking. Capacitors shall be marked as specified herein, as applicable (see 3.1).

* 3.24.1 Method I. Marking of capacitors shall conform to method I of MIL-STD-1285. Unless otherwise specified (see 3.1), capacitor marking shall include the PIN, 'JAN' brand (ER only), trademark or manufacturer's name, commercial and Government entity (CAGE) code, voltage, date code, and lot symbol in the order shown (see example). The number of lines may be more than shown in examples provided that the order is maintained.

Example of ER:	CCR75CG	PIN (see 1.2.1).
	821KM	
	JAN TM	'JAN' brand and trademark or manufacturer's name.
	12345	CAGE
	200V 0215A	Voltage, date code and lot symbol.
Example of non-ER:	CC75CG	PIN (see 1.2.1).
	821K	
	TM	Trademark or manufacturer's name.
	12345	CAGE
	200V 0215A	Voltage, date code and lot symbol.

3.24.1.1 PIN marking. Unless otherwise specified (see 3.1), the PIN shall be divided between the characteristic and capacitance symbols. An ER part may be marked and furnished as a non-ER part, if produced on the same assembly line, and subjected to and meets all the inspection requirements of the ER part.

3.24.1.2 JAN and J marking. The United States Government has adopted, and is exercising legitimate control over the certification marks "JAN" and "J", respectively, to indicate that items so marked or identified are manufactured to, and meet all the requirements of specifications. Accordingly, items acquired to and meeting all of the criteria specified herein and in applicable specification, shall bear the certification mark "JAN" except that items too small to bear the certification mark "JAN" shall bear the letter "J". The "JAN" or "J" shall be placed immediately before the part number except that if such location would place a hardship on the manufacturer in connection with such marking, the "JAN" or "J" may be located on the first line above or below the part number. Items furnished under contracts or orders which either permit or require deviation from the conditions or requirements specified herein and in applicable specifications shall not bear "JAN" or "J". In the event an item fails to meet the requirements of this specification and the applicable specification sheets or associated specifications, the manufacturer shall remove completely the military part number and the "JAN" or the "J" from the sample tested and also from all items represented by the sample. The "JAN" or "J" certification mark shall not be used on products acquired to contractor drawings or specifications. The United States Government has obtained Certificate of Registration Number 504,860 for the certification mark "JAN" and Registration Number 1,586,261 for the certification mark "J".

3.24.2 Method II. Marking shall be in accordance with method II of MIL-STD-1285; details and exceptions shall be as follows, and as specified (see 3.1):

a. The characteristic, capacitance, and capacitance tolerance shall be indicated on the capacitor bands of color, as applicable (see 3.1). The characteristic band (or spot) shall be wider (or larger) than any other band or spot.

b. The colors used shall be as specified in table IV. When the body color is the same as any of the band or spot colors, then either the body color, or the band or spot color shall be differentiated by shade or gloss, or by some other means.

3.24.3 Marking legibility (laser marking only). When tested as specified in 4.7.16, the marking shall remain legible.

Downloaded from http://www.everyspec.com

3.24.4 Substitutability of product level. A manufacturer may supply to all higher product levels than to which they are qualified. Items of an exponential product level as shown below and marked to lower product level with procuring agency approval, are substitutable for higher product levels, and shall not be remarked unless specified in the contract or order (see 6.2), the lot date codes on the parts are unchanged, and the workmanship criteria is met.

Parts qualified to product level	Are substitutable for product level
S	R, P, and M
R	P, and M
P	M
M	

* TABLE IV. Color code.

Color	Characteristic 1/	Nominal capacitance (pF)		Capacitance tolerance	
		First and second significant figures	Multiplier 2/	For nominal capacitance values greater than 10 pF	For nominal capacitance values of 10 pF or less
Black	C-	0	1		±2.0 pF (G)
Brown		1	10	±1% (F)	
Red		2	100	±2% (G)	±0.25 pF (C)
Orange		3	1,000		
Yellow		4			
Green		5		±5% (J)	±0.5 pF (D)
Blue		6			
Purple (violet)		7			
Gray		8	0.01		
White		9	0.1	±10% (K)	±1.0 pF (F)

1/ The characteristic is a two-letter symbol identifying the nominal temperature coefficient and the tolerance envelope for the temperature coefficient, respectively. However, the characteristic band or spot identifies only the nominal temperature coefficient.

2/ The multiplier is the factor by which the significant figures are multiplied to yield the nominal capacitance (see 1.2.1.3). The lowest possible numerical multiplier shall be used to avoid alternate coding; for example, 0.5 pF should be green, black, gray - NOT black, green, white.

* 3.24.5 Substitution of capacitance tolerance and rated voltage. Parts qualified and marked to tighter capacitance tolerance or higher rated voltage are substitutable, with procuring agency approval, for parts marked to looser capacitance tolerance or lower rated voltage, provided all other values, such as case size, characteristic, and leads are the same. The substitutable parts shall not be remarked unless specified in the contract or order (see 6.2).

3.25 Recycling and waste prevention. Recovered materials or environmentally preferable materials shall be used wherever possible without jeopardizing the intended use of this item.

* 3.26 Workmanship. Capacitors shall be processed in such a manner as to be uniform in quality when using 2x minimum to 4x maximum magnification. Capacitors shall not exhibit pits, corrosion, cracks, chips, or other defects that will affect life, serviceability, or appearance.

Downloaded from http://www.everyspec.com

4. VERIFICATION

4.1 Classification of inspections. The examination and testing of capacitors shall be classified as follows:

a. Qualification inspection (see 4.4)

b. Verification of qualification (see 4.5)

c. Conformance inspection (see 4.6)

4.2 QPL system. The manufacturer shall establish and maintain a QPL system in accordance with 3.3. Evidence of such compliance is a prerequisite for qualification and retention of qualification.

4.3 Inspection conditions and methods.

4.3.1 Inspection conditions. Unless otherwise specified herein, all inspections shall be performed in accordance with the "GENERAL REQUIREMENTS" of MIL-STD-202 except relative humidity shall not exceed 75 percent. Accuracy of all test voltage measurements shall be within ±2.0 percent of the specified voltage.

4.3.2 Methods.

4.3.2.1 Reference measurements. When requirements are based on comparative measurements made before and after conditioning, the reference measurement shall be considered the last measurement made at 25°C ±3°C prior to conditioning. Unless reference measurements have been made within 30 days prior to the beginning of conditioning, they shall be repeated.

4.3.3 Power supply. The power supply used for life testing shall have a regulation of ±2 percent or less of the specified test voltage.

4.4 Qualification inspection. Qualification inspection shall be performed at a laboratory acceptable to the Government (see 6.3), on sample units produced with equipment and procedures normally used in production.

4.4.1 Sample size. The number of capacitors to be subjected to qualification inspection shall be as specified in table V and the appendix of this specification. Each capacitor style shall be qualified separately.

4.4.2 Inspection routine. Sample units shall be subjected to the qualification inspection specified in table V, in the order shown. All sample units shall be subjected to the inspection of group I and group II. The sample shall then be divided as specified in table V for group III through group VI inclusive and subjected to the tests for their particular group. Samples that have been selected to be submitted to the life test shall be divided into two groups. One group shall be subjected to the accelerated condition and the other group to the rated condition. The decision as to whether or not the product is to be included on the QPL shall be made at the conclusion of the 1,000-hour life test. Each unit subjected to the accelerated condition shall be continued on for a total of 4,000 hours. Each unit subjected to the rated condition shall be continued on for a total of 32,000 hours.

4.4.3 Failures. Failures in excess of those allowed in table V shall be cause for refusal to grant qualification approval.

Downloaded from http://www.everyspec.com

* TABLE V. Qualification inspection.

Inspection	Requirement paragraph	Test method paragraph	Number of sample units to be inspected	Number of defectives permitted 1/
Group I 2/				
Thermal shock and voltage conditioning	3.6	4.7.2	All units	Not applicable
Radiographic inspection (FRL S only)	3.21	4.7.18	All units	Not applicable
Group II 2/				
Visual and mechanical examination:				
Material, design, and construction	3.1, 3.4, 3.5,	4.7.1		
Workmanship	3.26			
Physical dimensions and marking 3/	3.1, 3.24		37 (non-ER)	1
Capacitance	3.7	4.7.3	4/ 49 (ER)	
Dissipation factor	3.8	4.7.4		
Dielectric withstanding voltage	3.9	4.7.5		
Barometric pressure	3.10	4.7.6		
Insulation resistance	3.11	4.7.7		
Group III				
Temperature coefficient and capacitance drift	3.12	4.7.8.1	12	1
Shock, specified pulse	3.13	4.7.9		
Vibration, high frequency	3.14	4.7.10		
Thermal shock and immersion	3.15	4.7.11		
Group IV				
Terminal strength (direct load)	3.16	4.7.12		
Resistance to soldering heat	3.17	4.7.13	6	1
Moisture resistance	3.18	4.7.14		
Group V 5/				
Solderability	3.19	4.7.15		
Marking legibility (laser marking only)	3.24.3	4.7.16	6	1
Resistance to solvents (ink marking only)	3.20	4.7.17		
Fungus 6/	3.22	4.7.19		
Group VI				
Life (at elevated ambient temperatures)	3.23	4.7.20.1	12 (non-ER) 24 (ER)	1

1/ A sample unit having one or more defects will be charged as a single defective.
* 2/ Group I and group II examinations and tests are nondestructive.
3/ Marking defects are based on visual examination only and shall be charged only as illegible, incomplete, or incorrect marking. Provisions to reject unmarked parts will also be made.
4/ One additional sample unit is included in each sample to permit substitution for the failure allowed in group II (37 sample units for non-ER styles active for new design; 31 sample units for non-ER styles inactive for new design).
5/ Applicable to active for new design styles only.
6/ Certification of fungus resistance may be substituted for testing.

Downloaded from http://www.everyspec.com

4.4.4 FRL and quality level verification.

4.4.4.1 Failure rate (FR) qualification and lot conformance FR inspection. FR qualification and lot conformance FR inspection shall be in accordance with the general and detailed requirements of MIL-STD-690 with the following details.

a. Procedure I: Qualification at the initial FRL. Level "M" (1.0 percent) of FRSP-90 shall apply. Sample units that have been subjected to the qualification inspection specified in group VI, table V shall be continued on test as specified in 4.7.20.2.

b. Procedure II: Extension of qualification to lower FRLs. To extend qualification to the "R" (0.01 percent) FRL and "S" (0.001 percent) FRL, data from two or more voltage groups within a style of similar construction (see 4.6.1.1.1) may be combined.

c. Procedure III: Maintenance of FRL qualification. Maintenance period B of FRSP-10 shall apply. Regardless of the number of production lots produced during this period, the specified number of unit hours shall be accumulated to maintain qualification.

* 4.5 Verification of qualification (ER styles only). Every 6 months, the manufacturer shall provide verification of qualification to the qualifying activity. Continued qualification is based on meeting the following requirements:

a. MIL-STD-790 program.

b. The manufacturer has not modified the design of the item.

c. Lot rejection for group A inspection does not exceed 10 percent or one lot, whichever is greater.

d. The requirements for group B inspection are met.

e. Verification of FRLs.

f. PPM assessment.

When group B requirements were not met and the manufacturer has taken corrective action satisfactory to the qualifying activity, group B retesting shall be instituted. A summary of the retesting shall be forwarded to the qualifying activity within 30 days after completion of the retest.

Failure to submit the report within 30 days after the end of each 6 month period may result in loss of qualification for the product. In addition to the periodic report, the supplier shall immediately notify the qualifying activity at any time during the 6 month period that the inspection data indicates failure of the qualified product to meet the requirements of this specification.

As long as the required number of maintenance hours in a group (see 4.6.1.1.1) are able to be maintained by styles in that group, a style does not have to be produced solely for testing. The manufacturer shall certify that they retain the capabilities and facilities necessary to produce that product. In the event that units must be manufactured for the purpose of maintaining the required hours, they shall also undergo all required testing prior to being placed on life test and be subjected to all group B requirements.

Downloaded from http://www.everyspec.com

* 4.5.1 Verification of qualification (non-ER styles). To retain qualification, the supplier shall forward a report at 6-month intervals to the qualifying activity. The qualifying activity shall establish the initial reporting date. Retention of qualification of an ER style will also retain qualification of corresponding non-ER style (e.g., CCR75 and CC75). The report shall consist of:

a. A summary of the results of the tests performed for inspection of product for delivery (group A), indicating as a minimum the number of lots that have passed and the number that have failed. The results of tests of all reworked lots shall be identified and accounted for.

b. A summary of the results of tests performed for periodic inspection (group B), including the number and mode of failures. The summary shall include results of all periodic inspection tests performed and completed during the 6-month period. If the summary of the test results indicates nonconformance with specification requirements, and corrective action acceptable to the qualifying activity has not been taken, action may be taken to remove the failing product from the qualified products list.

Failure to submit the report within 30 days after the end of each 6 month period may result in loss of qualification for the product. In addition to the periodic report, the supplier shall immediately notify the qualifying activity at any time during the 6 month period that the inspection data indicates failure of the qualified product to meet the requirements of this specification.

In the event that no production occurred during the reporting period, a report shall be submitted certifying that the company still has the capabilities and facilities necessary to produce the item. If during 3 consecutive reporting periods there has been no production, the manufacturer may be required, at the discretion of the qualifying activity, to submit the products to testing in accordance with the qualification inspection requirements.

4.6 Conformance inspection.

4.6.1 Inspection of product for delivery. Inspection of product for delivery shall consist of group A inspection.

4.6.1.1 Inspection and production lot.

* 4.6.1.1.1 Inspection lot. An inspection lot shall consist of all capacitors of one or more styles, produced under essentially the same conditions and offered for inspection at the same time. ER parts shall be produced separately from non-ER parts. The sample from the lot shall be representative of the styles in the lot. The following styles are considered to be of similar style and may be combined:

Group	Style
1	CCR05, CCR06, CCR07, CCR08, and CCR09
2	CCR75, CCR76, CCR77, CCR78, and CCR79.
3	All styles inactive for new design may be combined.

* 4.6.1.1.2 Production lot. A production lot shall consist of all capacitors of the same style, voltage rating, nominal capacitance value, and voltage-temperature characteristic. The manufacture of all parts in the lot shall have been started, processed, assembled, and tested as a group. Lot identity shall be maintained throughout the manufacturing cycle.

4.6.1.2 Group A inspection. Group A inspection shall consist of the inspections specified in table VI or table VIII. Subgroup 1 and subgroup 2 shall be done in the order shown. Subgroup 3 and subgroup 4 in table VI may be done at any time after subgroup 1.

4.6.1.2.1 ER capacitors.

* 4.6.1.2.1.1 Subgroup 1 tests. Subgroup 1 tests shall be performed on 100 percent of the product supplied under this specification. Capacitors failing the tests of subgroup 1 shall be removed from the lot. Production lots exceeding the 5 percent defective allowable (PDA) shall be segregated from new lots and lots that have passed inspection. Production lots exceeding 15 percent PDA shall be rejected and shall not be resubmitted for reinspection.

Downloaded from http://www.everyspec.com

Production lots with greater than 5 percent to 15 percent PDA may be offered for acceptance only if the manufacturer 100 percent retests to the requirements of subgroup 1. Resubmitted lots shall be kept separate and shall be clearly identified as resubmitted lots. If, during the 100 percent inspection, the lot requires that more than 3 percent of the capacitors be discarded, the entire lot shall be rejected and shall not be resubmitted.

4.6.1.2.1.1.1 Manufacturer's production inspection. If the manufacturer performs tests similar to those specified in subgroup 1 of table VI as the final step of their production process, group A, subgroup 1 may be waived and the data resulting from the manufacturer's production tests may be used instead. Authority to waive the subgroup 1 inspection shall be granted by the qualifying activity only. The following criteria must be complied with:

a. Tests conducted by the manufacturer during production shall be clearly identical to or more stringent than that specified for subgroup 1.

b. Manufacturer subjects 100 percent of the product supplied under this specification to their production tests.

c. The parameters measured and the failure criteria shall be the same as, or more stringent than, those specified herein.

d. The lot rejection criterion is the same as, or more stringent than that specified herein.

e. The manufacturer shall make available all information concerning the test procedures and instrumentation used in their production tests. This data shall be provided as part of the evaluation required for MIL-STD-790. The manufacturer shall also make available to the Government all records of all detail test data resulting from production tests.

f. Once approved, the manufacturer shall not change the test procedures or criteria without prior notification and concurrence by the qualifying activity.

* TABLE VI. Group A inspection (ER).

Inspection	Requirement paragraph	Test method paragraph	Sampling procedure
Subgroup 1 1/ Thermal shock and voltage conditioning	3.6	4.7.2	100% inspection
Subgroup 2 Visual and mechanical examination, external: Physical dimensions 2/ Marking 3/ Workmanship	 3.1 3.24 3.26	 4.7.1	 See table VII
Subgroup 3 Solderability 4/	3.19	4.7.15	5 samples / 0 failures
Subgroup 4 Radiographic inspection (FRL S only)	3.21	4.7.18	100% inspection

1/ Post checks are required in accordance with 3.6.
2/ This can be eliminated if the manufacturer has demonstrated process under the SPC program (see 3.3.1), and has been approved by the qualifying activity. If the design, material, construction, or processing of the part is changed or, there are any quality problems, or failures, the qualifying activity may require resumption of the specified testing. Deletion of testing does not relieve the manufacturer from meeting the test requirement in case of dispute.
3/ Marking defects are based on visual examination only. Any subsequent electrical defects shall not be used as a basis for determining marking defects.
4/ The manufacturer may request the deletion of the solderability test provided an in-line or process control system for assessing and to assuring the solderability of leads can be validated and approved by the qualifying activity. Deletion of the test does not relieve the manufacturer from meeting this test requirement.

Downloaded from http://www.everyspec.com

TABLE VII. Sampling plans for subgroup 2.

Lot size	Sample size
1 - 13	100%
14 - 150	13
151 - 280	20
281 - 500	29
501 - 1,200	34
1,201 - 3,200	42
3,201 - 10,000	50
10,001 - 35,000	60
35,001 - 150,000	74
150,001 - 500,000	90
500,001 - Up	102

4.6.1.2.1.2 Subgroup 2

* 4.6.1.2.1.2.1 Sampling plan. Subgroup 2 tests shall be performed on an inspection lot basis. Samples subjected to subgroup 2 shall be selected in accordance with table VII based on the size of the inspection lot. In the event of one or more failures, the lot shall be rejected.

* 4.6.1.2.1.2.2 Rejected lots. The rejected lot shall be segregated from new lots and those lots that have passed inspection. The rejected lot shall be 100 percent inspected for those quality characteristics found defective in the sample and any defectives found removed from the lot. A new sample of parts shall then be randomly selected in accordance with table VII. If one or more defects are found in this second sample the lot shall be rejected and shall not be supplied to this specification.

4.6.1.2.1.3 Subgroup 3 (solderability).

4.6.1.2.1.3.1 Sampling plan. Five samples shall be selected randomly from every inspection lot and subjected to the solderability test. The manufacturer may use electrical rejects from the subgroup 1 screening tests for all or part of the samples to be used for solderability testing. If there are one or more defects, the lot shall be rejected.

4.6.1.2.1.3.2 Rejected lots. In the event of one or more defects, the manufacturer may use one of the following options to rework the lot:

a. Each production lot that was used to form the failed inspection lot shall be individually submitted to the solderability test as required in 4.6.1.2.1.3.1. Production lots that pass the solderability test are available for shipment. Production lots failing the solderability test can be reworked only if submitted to the solder dip procedure in 4.6.1.2.1.3.2b.

b. The manufacturer shall submit the failed lot to a 100 percent solder dip process in accordance with the appendix. Two hundred sample units from this lot shall then be subjected to all group A, subgroup 1 post-electrical tests, with no defects allowed.

(1) If the 200 sample units (or 100 percent of the lot, whichever is less) pass the group A, subgroup 1 post-electrical tests, 5 additional units shall then be subjected to the solderability test, with no defects allowed. If there are one or more defects, the lot shall be considered rejected and shall not be furnished against the requirements of this specification.

Downloaded from http://www.everyspec.com

(2) If the 200 sample units (or 100 percent of the lot, whichever is less) fail group A, subgroup 1 post-electrical tests, these tests shall be performed on 100 percent of the lot. The lot must meet the 5 percent PDA requirements as specified in 4.6.1.2.1.1. If the PDA requirements are not met, the lot shall be considered rejected and shall not be furnished against the requirements of this specification. If the PDA requirements are met, 5 sample units shall be subjected to the solderability testing criteria of 4.6.1.2.1.3.2b (1).

4.6.1.2.1.3.3 Disposition of samples. The solderability test is considered a destructive test and samples submitted to the solderability test shall not be supplied on the contract or order.

4.6.1.2.1.4 Subgroup 4 (FRL "S" only). The subgroup 4 test shall be performed on all capacitors offered for inspection. Capacitors not meeting the inspection criteria shall be removed from the production lot and shall not be supplied to this specification.

4.6.1.2.1.5 PPM calculations. The manufacturer shall establish a ppm system in accordance with 3.3.2 for assessing and calculating average outgoing quality of capacitors. A ppm rate combining capacitance, dissipation factor, insulating resistance (IR) (25°C), and DWV shall be assessed for lots that have passed the group A inspection. The manufacturer's ppm system shall also address rectification procedures for lots failing ppm assessment. Data from the rectification process shall not be used to calculate ppm.

4.6.1.2.2 Non-ER capacitors.

4.6.1.2.2.1 Subgroup 1 and subgroup 2 tests.

4.6.1.2.2.1.1 Sampling plan. The sampling plan for subgroup 1 and subgroup 2 shall be as specified in table VIII.

4.6.1.2.2.1.2 Rejected lots. If an inspection lot for subgroup 1 or subgroup 2 is rejected, the manufacturer may rework the inspection lot to correct the defects, or screen out the defective units and resubmit the lot for reinspection. Resubmitted lots shall be inspected using tightened inspection. Such lots shall be separated from new lots, and shall be clearly identified as reinspected lots.

TABLE VIII. Group A inspection (Non-ER).

Inspection	Requirement paragraph	Test method paragraph	Sampling procedure
Subgroup 1			
Capacitance	3.7	4.7.3	125 samples
Dissipation factor	3.8	4.7.4	0 failure
Dielectric withstanding voltage	3.9	4.7.5	
Insulation resistance	3.11	4.7.7	
Subgroup 2			
Visual and mechanical examination:			
Material	3.1, 3.4		13 samples
Physical dimensions	3.5	4.7.1	0 failures
Marking 1/	3.24		
Workmanship	3.26		
Subgroup 3			
Solderability	3.19	4.7.15	5 samples 0 failures

* 1/ Marking defects are based on visual examination only.

Downloaded from http://www.everyspec.com

4.6.1.2.2.2 Subgroup 3 (solderability).

4.6.1.2.2.2.1 Sampling plan. Five samples shall be selected randomly from every inspection lot and subjected to the solderability test. The manufacturer may use electrical rejects from subgroup 1 and subgroup 2 for all or part of the samples to be used for solderability testing. If there are one or more defects, the lot shall be rejected.

4.6.1.2.2.2.2 Rejected lots. In the event of one or more defects, the manufacturer may use one of the following options to rework the lot:

a. Each production lot that was used to form the failed inspection lot shall be individually submitted to the solderability test as required in 4.6.1.2.2.2.1. Production lots that pass the solderability test are available for shipment. Production lots failing the solderability test can be reworked only if submitted to the solder dip procedure in 4.6.1.2.2.2.2b.

b. The manufacturer shall submit the failed lot to a 100 percent solder dip process in accordance with the appendix. Following the solder dip, the electrical measurements required in group A, subgroup 1 tests shall be repeated on another 125 samples with no defects allowed. Five additional samples shall be selected and subjected to the solderability test with no defects allowed. If the lot fails this solderability test, the lot shall not be furnished against the requirements of this specification.

4.6.1.2.2.2.3 Disposition of samples. The solderability test is considered a destructive test and samples submitted to the solderability test shall not be supplied on the contract or order.

4.6.2 Periodic group B inspection (ER only). Except where the results of this inspection show noncompliance with the applicable requirements (see 4.6.3), delivery of products that have passed group A inspection shall not be delayed pending the results of these periodic inspections. Group B inspection shall consist of the tests specified in table IX in the order shown, and shall be performed on sample units selected from lots that have passed group A inspection. Capacitor styles manufactured during that month shall be represented, as far as practical, in at least the approximate ratio of production.

4.6.2.1 Sampling plan.

4.6.2.1.1 Subgroup 1. Every 2 months, samples shall be taken from the tightest temperature coefficient tolerance and subjected to the applicable tests in table IX.

* 4.6.2.1.2 Subgroup 2 through subgroup 4. Every 2 months, sample units shall be selected from each group as detailed in 4.6.1.1.1. Examination of 2 years of the bi-monthly samples should include all individual styles that were manufactured during that period. Allowable failures shall be as specified in table IX.

* 4.6.2.1.3 Subgroup 5. Every 4 months, at least 12 samples shall be selected from the highest capacitance value for each style produced and subjected to the test specified in table IX. These capacitors may be in any capacitance tolerance.

4.6.2.2 Disposition of sample units. Sample units that have been subjected to group B inspection shall not be delivered on the contract.

4.6.3 Noncompliance. If a sample unit fails to pass group B inspection, the manufacturer shall notify the qualifying activity and cognizant inspection activity of such failure and take corrective action on the materials or processes, or both, as warranted, and on all units of product that can be corrected and that were manufactured under essentially the same conditions, with essentially the same materials and processes, and which are considered subject to the same failure. Acceptance and shipment of the product shall be discontinued until corrective action, acceptable to the qualifying activity, has been taken. After the corrective action has been taken, group B inspection shall be repeated on additional sample units (all inspections), or the inspection that the original sample failed, at the option of the qualifying activity. Group A inspection may be reinstituted: However, final acceptance shall be withheld until the group B inspection has shown that corrective action was successful. In the event of failure after reinspection, information concerning the failure and corrective action taken shall be furnished to the cognizant inspection activity and the qualifying activity.

Downloaded from http://www.everyspec.com

* TABLE IX. Group B inspection.

Inspection	Requirement paragraph	Test method paragraph	Number of sample units to be inspected	Number of defectives permitted 1/	
Subgroup 1 2/ Temperature coefficient and capacitance drift	3.12	4.7.8.2	12	0	
Subgroup 2 3/ 4/ Shock, specified pulse 5/ Vibration, high frequency 5/ Thermal shock and immersion 5/	3.13 3.14 3.15	4.7.9 4.7.10 4.7.11	12	1	1
Subgroup 3 4/ Terminal strength (direct load) 5/ Resistance to soldering heat Moisture resistance	3.16 3.17 3.18	4.7.12 4.7.13 4.7.14	12	1	
Subgroup 4 6/ Marking legibility (laser marking only) 5/ Resistance to solvents (ink marking only) 5/	3.24.3 3.20	4.7.16 4.7.17	6	1	
Subgroup 5 Life (at elevated ambient temperature)	3.23	4.7.20.2	12 minimum per group (see 4.6.1.1.1)	7/	

1/ A sample unit having one or more defects shall be considered a single defective.
2/ If the manufacturer can demonstrate that this test has been performed five consecutive times with zero failures, the frequency of this test, with the approval of the qualifying activity, can be performed on an annual basis. If the design, material, construction, or processing of the part is changed or, if there are any quality problems or failures, the qualifying activity may require resumption of the original test frequency.
3/ Subgroup 1 and subgroup 2 shall be checked during alternate bimonthly periods.
4/ Subgroup 1 tests may be performed on sample units that have been subjected to and have passed the monthly inspection, when these sampling periods coincide.
5/ If the manufacturer can demonstrate that this test has been performed five consecutive times with zero failures, this test, with the approval of the qualifying activity, can be deleted. The manufacturer, however, shall perform this test every three years after the deletion as part of long term design verification. If the design, material, construction, or processing of the part is changed or, if there are any quality problems, the qualifying activity may require resumption of the specified testing. Deletion of testing does not relieve the manufacturer from meeting the test requirement in case of dispute.
6/ Applicable to active new design styles (ER and non-ER) only.
7/ For non-ER, one defective is permitted. For ER, the number of allowable defectives may vary with the failure rate level of the part being tested.

4.7 Methods of examination and test.

4.7.1 Visual and mechanical examination. Capacitors shall be examined to verify that the materials, design, construction, physical dimensions, marking, and workmanship are in accordance with the applicable requirements. (See 3.1, 3.4, 3.5, 3.24 and 3.26).

4.7.2 Thermal shock and voltage conditioning (ER parts only) (see 3.6). Capacitors shall be subjected to the tests of 4.7.2.1 and 4.7.2.2.

Downloaded from http://www.everyspec.com

4.7.2.1 Thermal shock. Capacitors shall be tested in accordance with method 107 of MIL-STD-202. The following details and exception shall apply:

a. Test condition A, except that in step 3, sample units shall be tested at the applicable high test temperature (see 3.1).

b. Measurements before and after cycling: Not applicable.

4.7.2.2 Voltage conditioning. One of the voltage conditioning tests in 4.7.2.2.1 or 4.7.2.2.2 shall be performed. The lot traveler shall indicate which test is used. When the optional voltage conditioning test of 4.7.2.2.2 is used, the traveler shall include the specific accelerated voltage used and the test time.

4.7.2.2.1 Standard voltage conditioning. Voltage conditioning shall follow the thermal shock test. The voltage conditioning shall consist of applying twice the rated voltage to the unit at +125°C +4°C, -0°C for 96 hours minimum. Voltage shall be applied and shall reach maximum value within one second, maximum.

After completion of the exposure period, the unit shall be allowed to stabilize at room temperature (25°C). After stabilization at room temperature, the DWV and IR shall be measured as specified in 4.7.5 and 4.7.7.1, respectively. After measurement of DWV and IR at 25°C, the unit shall be stabilized at +125°C +4°C, -0°C and IR measured as specified in 4.7.7.2. After allowing the unit to stabilize at room temperature, the capacitance and dissipation factor shall be measured as specified in 4.7.3 and 4.7.4, respectively. NOTE: IR at +25°C may be skipped if +125°C IR is performed with +25°C limits.

4.7.2.2.2 Optional voltage conditioning (ER only). The manufacturer, with approval from the qualifying activity, may perform an optional voltage conditioning test instead of the standard voltage conditioning test of 4.7.2.2.1. Optional voltage conditioning shall be limited to capacitors with a dc rated voltage of 200 volts or less. All conditions of 4.7.2.2.1 apply, with the exception of the voltage applied and the test time. The minimum time duration, T(test), shall be calculated as follows:

$$T(\text{test}) = \frac{800}{(E\ \text{test}\ /\ E\ \text{rated})^3}$$

Where: $2 \times E\ \text{rated} \leq E\ \text{test} \leq 4 \times E\ \text{rated}$
T(test) = Minimum test time in hours
E test = Applied voltage
E rated = Rated voltage of the capacitor

4.7.3 Capacitance (see 3.7). Capacitors shall be tested in accordance with method 305 of MIL-STD-202. The following detail and exception shall apply:

a. Test frequency: 1 MHz ±100 kHz when the nominal capacitance is 1,000 pF or less, and 1 kHz ±100 Hz when the nominal capacitance is greater than 1,000 pF. At the option of the manufacturer, capacitance measurements may be made at any frequency from 1 kHz to 1 MHz and referred to measurements at 1 MHz and 1kHz as applicable.

b. Limit of accuracy: The accuracy of measurement shall be .33 percent of the nominal capacitance tolerance or 2 percent, whichever is smaller; however, the accuracy need not be better than 0.1 pF.

c. Test jig for measuring capacitance values of less than 10 pF: Shall be a guarded three terminal type, or equivalent.

4.7.4 Dissipation factor (see 3.8). The dissipation factor shall be measured with a capacitance bridge or other suitable method at the frequency specified in 4.7.3a. The voltage shall be 1.0 ±0.2 volts rms. The inherent accuracy of the measurement shall be ±2 percent of the reading plus 0.1 percent dissipation factor (absolute). Suitable measurement techniques shall be used to minimize errors due to the connections between the measuring apparatus and the capacitor.

Downloaded from http://www.everyspec.com

4.7.5 Dielectric withstanding voltage (see 3.9). Capacitors shall be tested in accordance with method 301 of MIL-STD-202. The following details shall apply:

a. Magnitude and nature of test voltage: 300 percent of the dc rated voltage.

b. Duration of application of test voltage: 5 seconds ±1 second.

c. Points of application of test voltage: Between the capacitor-element terminals.

d. Limiting value of surge current: Shall not exceed 50 mA.

e. Examination after test: Capacitors shall be examined for evidence of damage and breakdown.

4.7.5.1 Body insulation (qualification only). Capacitors shall be tested in accordance with one of the following, as specified.

a. Test I: Capacitors shall be placed in the trough of a V-block which shall extend beyond the ends of the body of the capacitor. A dc potential of 1,300 volts shall then be applied between the two leads connected together and the V-block for a period of 5 seconds ±1 second. The surge current shall not exceed 50 mA.

* b. Test II: Capacitors shall be wrapped with a conductive tape or foil so that the conductive tape or foil shall not be less than .0625 inch (1.59 mm) and not more than .125 inch (3.18 mm) away from the lead wires. A dc potential of 1,300 volts shall be applied between the two leads connected together and the tape or foil for a period of 5 seconds ±1 second. The test circuit shall be so arranged that the surge current does not exceed 50 mA.

After the test, capacitors shall be examined for evidence of damage or breakdown.

4.7.6 Barometric pressure (qualification only) (see 3.10). Capacitors shall be tested in accordance with method 105 of MIL-STD-202. The following details and exceptions shall apply:

a. Method of mounting: Securely fastened by suitably clamping their leads.

b. Test condition B.

c. Test during subjection to reduced pressure: 100 percent of the dc rated voltage (see 3.1) shall be applied between the capacitor-element terminals for a period of 5 seconds ±1 second. The surge current shall not exceed 50 mA.

4.7.7 Insulation resistance (see 3.11).

4.7.7.1 At +25°C. Capacitors shall be tested in accordance with method 302 of MIL-STD-202. The following details shall apply:

a. Test potential: Rated voltage (see 3.1).

b. Points of measurement: Between capacitor-element terminals.

c. Electrification time: 2 minutes ±5 seconds, except during conformance inspection when electrification time may be the time required by the capacitor to reach full charge, provided it does not exceed 2 minutes. Voltage shall be applied through a resistor that will limit the charging current from 30 mA to 50 mA.

4.7.7.2 At high ambient temperature. Capacitors shall be subjected to the applicable high ambient temperature (see 3.1) for a period of time sufficient to reach thermal stability, and the insulation resistance shall then be measured as specified in 4.7.7.1.

Downloaded from http://www.everyspec.com

4.7.8 Temperature coefficient and capacitance drift (see 3.12).

4.7.8.1 For qualification inspection.

4.7.8.1.1 Temperature coefficient. Capacitance measurements shall be made as specified in 4.7.3 and at the temperatures specified in table X.

4.7.8.1.2 Capacitance drift. Capacitance drift shall be computed by dividing the greatest single difference between any two of the three capacitance values recorded at 25°C by the value determined at the reference temperature (see table X).

TABLE X. Temperature coefficient and capacitance drift.

Step	Temperature, °C	Step	Temperature, °C
A	+25 +0, -2	G	+65 +2, -0
B	-55 +0, -2	H	+85 +2, -0
C	-40 +0, -2	I	1/ +105 +2, -0
D	-10 +0, -2	J	1/ +125 +2, -0
E (reference)	+25 +0, -2	K	+25 +0, -2
F	+45 +2, -0		

1/ Applicable to +125°C capacitors.

The measurement at each temperature shall be recorded when two successive readings taken at 5 minute intervals at that temperature indicate no change in capacitance. The accuracy of capacitance increments shall be within ±0.005 pF. For capacitors with values of 20 pF or less, the temperature coefficient tolerance shall be as specified (see 3.1).

4.7.8.2 For conformance inspection.

* 4.7.8.2.1 Temperature coefficient. Capacitance measurements shall be made as specified in 4.7.8.1.1, except that measurements shall be made at +25°C +0°C, -2°C; -55°C +0°C, -2°C; +25°C +0°C, -2°C (reference temperature); +85°C +2°C, -0°C; +125°C +2°C, -0°C (if applicable, see 3.1); and +25°C +0°C, -2°C, respectively, and the values so determined shall be checked against the known shape of the curve for the dielectric material used, as determined in more complete tests.

4.7.8.2.2 Capacitance drift. Capacitance drift shall be computed as specified in 4.7.8.1.2.

4.7.9 Shock, specified pulse (see 3.13). Capacitors shall be tested in accordance with method 213 of MIL-STD-202. The following details shall apply:

a. Mounting: Capacitor shall be rigidly mounted by the body.

b. Test condition I: (100 g's).

c. Measurements during shock: During the last shock in each direction, an electrical measurement shall be made to determine intermittent contacts of 0.5 ms or greater duration or open-circuit or short-circuiting.

d. Examination after shock: Capacitors shall be visually examined for evidence of breakdown, arcing, and mechanical damage.

Downloaded from http://www.everyspec.com

4.7.10 Vibration, high frequency (see 3.14). Capacitors shall be tested in accordance with method 204 of MIL-STD-202. The following details and exception shall apply:

a. Mounting of specimens: Capacitors shall be rigidly mounted by the body. The mounting fixture shall be so constructed as to preclude any resonances within the test range. An examination of the mounting fixture shall be made on a vibrator. If any resonant frequencies are observed, adequate steps must be taken to dampen the structure.

b. Electrical load conditions: During the test, a dc potential equal to 125 percent of the dc rated voltage (see 3.1) shall be applied between the terminals of the capacitor-element under test.

c. Test condition D: (20 g's).

d. Duration and direction of motion: 4 hours in each of two mutually perpendicular planes (total of 8 hours), one parallel to and the other perpendicular to the major axis.

e. Measurements during vibration: As specified in 4.7.9c.

f. Examination and measurements after vibration: Capacitors shall be visually examined for evidence of mechanical damage, and the capacitance, dissipation factor, dielectric withstanding voltage, and insulation resistance shall be measured as specified in 4.7.3, 4.7.4, 4.7.5, and 4.7.7.1, respectively.

4.7.11 Thermal shock and immersion (see 3.15).

4.7.11.1 Thermal shock. Capacitors shall be tested in accordance with method 107 of MIL-STD-202. The following details shall apply:

a. Test condition: A, except the maximum temperature shall be +85°C +3°C, -0°C, or +125°C +3°C, -0°C, as applicable (see 3.1).

b. Measurement after cycling: not applicable.

4.7.11.2 Immersion. Following thermal shock, capacitors shall be tested in accordance with method 104 of MIL-STD-202. The following details shall apply:

a. Test condition: B.

b. Examinations and measurements after final cycle: Capacitors shall be visually examined for evidence of corrosion and mechanical damage; the capacitance, dissipation factor, dielectric withstanding voltage, and insulation resistance shall be measured as specified in 4.7.3, 4.7.4, 4.7.5, and 4.7.7.1, respectively.

4.7.12 Terminal strength (direct load) (see 3.16). Capacitors shall be tested in accordance with method 211 of MIL-STD-202. The following details and exceptions shall apply:

a. Test condition: A, applicable to all styles. Applied force: 5 pounds, unless otherwise specified (see 3.1).

b. Test condition: C, applicable to radial-lead units only. Applied force: 1.0 pound +0.1 pound, -0 pound.

c. Test condition: D, applicable to axial-lead units only.

d. Examination after test: Capacitors shall be visually examined for evidence of loosening or rupturing of terminals.

Downloaded from http://www.everyspec.com

4.7.13 Resistance to soldering heat (see 3.17). Capacitors shall be tested in accordance with method 210 of MIL-STD-202. The following details and exceptions shall apply:

a. Depth of immersion in the molten solder: To a minimum of .050 inch +.020 inch, -0 inch (1.27 mm +0.51 mm, -0 mm) from the capacitor body (the example shown on figure 4 is applicable to all terminal types).

b. Test condition: B.

c. Cooling time prior to measurement after test: 10 minutes ±1 minute, unless otherwise specified (see 3.1).

d. Measurements after test: Capacitance, dissipation factor, and insulation resistance shall be measured as specified in 4.7.3, 4.7.4, and 4.7.7.1, respectively.

f. Internal examination after test: Not required.

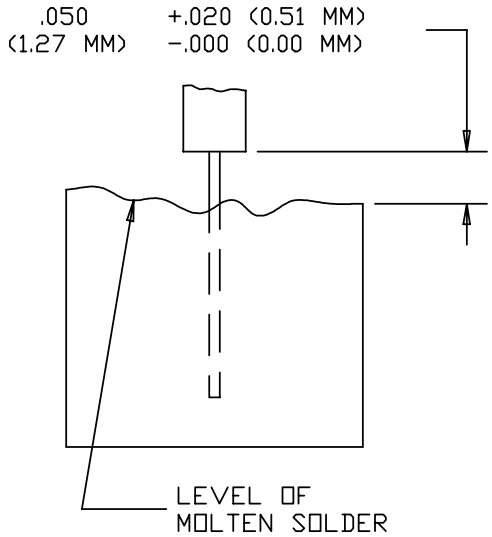

FIGURE 4. Example of axial wire-lead depth of immersion in molten solder.

4.7.14 Moisture resistance (see 3.18). Capacitors shall be tested in accordance with method 106 of MIL-STD-202. The following details and exceptions shall apply:

a. Initial measurements: Not applicable.

b. Polarization (unless otherwise specified, see 3.1): During the first 10 cycles only, a dc potential of 100 volts or rated voltage, whichever is less, shall be applied across the capacitor terminals. Once each day, a check shall be performed to determine whether any capacitors have shorted. Vibration cycle of step 7b shall not be performed.

c. Number of cycles: 20 continuous cycles.

d. Examination and final measurement: On completion of step 6 of the final cycle, capacitors shall be conditioned at +25°C ±5°C and a relative humidity of 30 percent to 60 percent for a period of 18 hours minimum to 24 hours maximum, and shall be visually examined for evidence of mechanical damage and obliteration of marking; capacitance, dielectric withstanding voltage, and insulation resistance shall be measured as specified in 4.7.3, 4.7.5 (and 4.7.5.1, if applicable), and 4.7.7.1, respectively.

4.7.15 Solderability (see 3.19). Capacitors shall be tested in accordance with method 208 of MIL-STD-202. Two terminations shall be tested.

Downloaded from http://www.everyspec.com

4.7.16 Marking legibility (laser marking only) (see 3.24.3). Capacitors shall be coated with .005 inch (0.13 mm) minimum of silicone resin insulating compound. After curing, coated capacitors shall be examined for legibility under normal production room lighting by an inspector with normal or corrected 20/20 vision.

4.7.17 Resistance to solvents (ink marking only) (see 3.20). Capacitors shall be tested in accordance with method 215 of MIL-STD-202. Brushing may be applied to the marked portion of the capacitor body only.

4.7.18 Radiographic inspection (for qualification and FRL "S" only) (see 3.21). Capacitors shall be tested in accordance with method 209 of MIL-STD-202. The following details and exception shall apply:

a. Radiographic quality: The radiograph shall render a clear, sharp image of the penetrameter.

b. Image-quality indicator: A radiograph of the penetrameter shall be included on each radiograph film. The penetrameter may be made from a sample capacitor, of the same style as the capacitor being radiographed, with an AWG number 48 copper wire mounted across the capacitor body or it may be fabricated in accordance with or be equivalent to the example on figure 5.

c. Positions of specimen: Unless otherwise specified (see 6.2), one view shall be taken of each capacitor perpendicular to the plane of the lead surface (see figure 6).

d. Evaluation of images:

(1) Special kind of viewing equipment: Magnifying glass.

(2) Magnification: 10X.

(3) Defects to be sought in specimen: As specified in 3.21.

e. Additional required examination:

(1) There shall be a minimum of 80 percent solder fillet between capacitor-element and each lead.

(2) There shall be a minimum of .005 inch (0.13 mm) encapsulating material encasing the capacitor element, except as shown in figure 7.

(3) There shall be a minimum of .005 inch (0.13 mm) between edge of case and tip of solder spike.

(4) Extraneous particles or voids in encapsulating material shall not be greater than .005 inch (0.13 mm) in any dimension.

NOTE: Test results (covering the number of capacitors tested with number and kinds of failure noted) and radiograph shall be retained for a minimum of 5 years. On request of user, test results shall be supplied with each shipment.

4.7.19 Fungus (see 3.22). Capacitors shall be tested in accordance with method 508 of MIL-STD-810.

4.7.20 Life (at elevated ambient temperature) (see 3.23).

4.7.20.1 For qualification inspection. Capacitors shall be tested in accordance with method 108 of MIL-STD-202. The following details and exceptions shall apply:

a. Distance of temperature measurements from specimens, in inches: Not applicable.

b. Test temperature: At the applicable elevated test temperature, ±3°C (see 3.1).

Downloaded from http://www.everyspec.com

* c. Operating conditions: One of the following conditions as specified (see 3.1).

Condition 1: Capacitors shall be subjected to the dc potential equal to a minimum of 150 percent of the dc rated voltage on which an alternating-current rms potential (60 Hz ±2 Hz) equal to a minimum of 50 percent of dc rated voltage is superimposed.

Condition 2: Capacitors shall be subjected to the dc potential equal to a minimum of 200 percent of the dc rated voltage. Current shall be equal to 30mA to 50 mA.

d. Test condition: ER: F, ±24 hours
Non-ER: D, ±12 hours.

e. Examination and measurements after exposure: Capacitors shall be returned to the inspection conditions specified in 4.3, and shall be visually examined for evidence of corrosion and mechanical damage; the capacitance, dissipation factor, and insulation resistance shall be measured as specified in 4.7.3, 4.7.4, and 4.7.7.1, respectively.

4.7.20.2 For conformance inspection. Capacitors shall be tested as specified in 4.7.20.1, except that duration of test will be 2,000 hours +96 hours, -0 hours for ER styles and 1000 hours +48 hours, -0 hours for non-ER styles.

Downloaded from http://www.everyspec.com

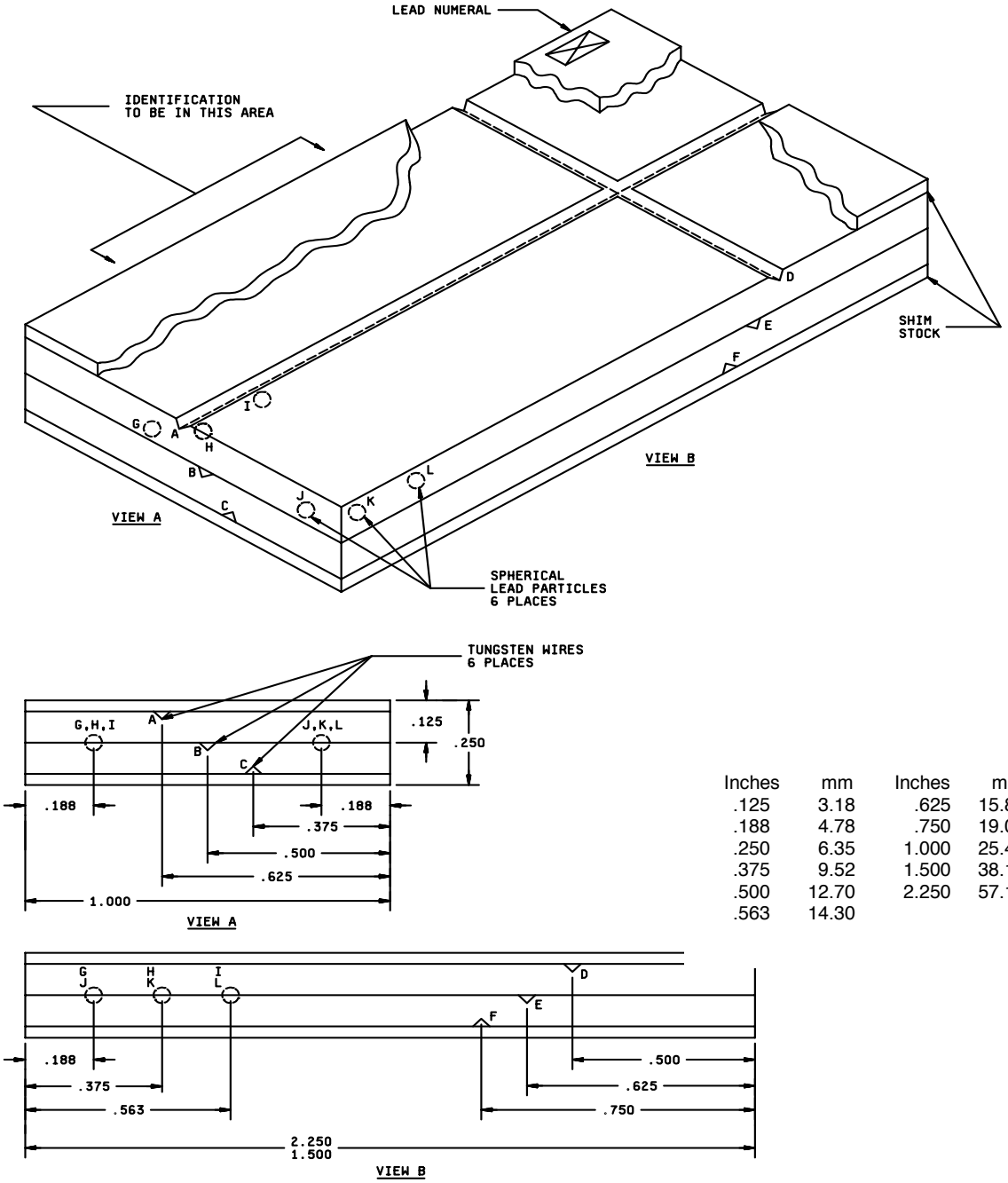

Inches	mm	Inches	mm
.125	3.18	.625	15.88
.188	4.78	.750	19.05
.250	6.35	1.000	25.40
.375	9.52	1.500	38.10
.500	12.70	2.250	57.15
.563	14.30		

FIGURE 5. Image quality indicator (optional).

Downloaded from http://www.everyspec.com

Table of image quality indicators

Tungsten wire diameters						Lead particle diameters						Steel shim stock
A	B	C	D	E	F	G	H	I	J	K	L	
.002 (0.05)	.001 (0.03)	.0005 (0.01)	.0005 (0.01)	.001 (0.03)	.002 (0.05)	.015 (0.38)	.010 (0.25)	.008 (0.20)	.006 (0.15)	.004 (0.10)	.002 (0.05)	None
.002 (0.05)	.001 (0.03)	.0005 (0.01)	.0005 (0.01)	.001 (0.03)	.002 (0.05)	.015 (0.38)	.010 (0.25)	.008 (0.20)	.006 (0.15)	.004 (0.10)	.002 (0.05)	.002 (0.05)
.002 (0.05)	.001 (0.03)	.0005 (0.01)	.0005 (0.01)	.001 (0.03)	.002 (0.05)	.015 (0.38)	.010 (0.25)	.008 (0.20)	.006 (0.15)	.004 (0.10)	.002 (0.05)	.005 (0.13)
.002 (0.05)	.001 (0.03)	.0005 (0.01)	.0005 (0.01)	.001 (0.03)	.002 (0.05)	.015 (0.38)	.010 (0.25)	.008 (0.20)	.006 (0.15)	.004 (0.10)	.002 (0.05)	.007 (0.18)
.003 (0.08)	.002 (0.05)	.001 (0.03)	.001 (0.03)	.002 (0.05)	.003 (0.08)	.015 (0.38)	.010 (0.25)	.008 (0.20)	.006 (0.15)	.004 (0.10)	.002 (0.05)	.010 (0.25)
.003 (0.08)	.002 (0.05)	.001 (0.03)	.001 (0.03)	.002 (0.05)	.003 (0.08)	.015 (0.38)	.010 (0.25)	.008 (0.20)	.006 (0.15)	.004 (0.10)	.002 (0.05)	.015 (0.38)
.005 (0.13)	.003 (0.08)	.002 (0.05)	.002 (0.05)	.003 (0.08)	.005 (0.13)	.015 (0.38)	.010 (0.25)	.008 (0.20)	.006 (0.15)	.004 (0.10)	.002 (0.05)	.025 (0.64)
.005 (0.13)	.003 (0.08)	.002 (0.05)	.002 (0.05)	.003 (0.08)	.005 (0.13)	.015 (0.38)	.010 (0.25)	.008 (0.20)	.006 (0.15)	.004 (0.10)	.002 (0.05)	.035 (0.89)

NOTES:

1. Dimensions are in inches.
2. Metric equivalents are given in parentheses for general information only.
3. Wires shall be tungsten, shim stock shall be carbon steel, particles shall be lead. Center section shall be .125 inch (3.18 mm) layers of clear acrylic plastic, bonded with clear plastic cement of low X-ray density. Fasteners may be used within .250 inch (6.35 mm) from each corner, but shall not interfere with end use of the penetrameter. Bottom surface shall be flush.
4. All dimensions shown are ±.005 inch (0.13 mm), except wires and shim stock, which shall be within standard mil tolerances, and lead particles, which shall be ±.0002 inch (0.005 mm). Groove details are not critical except that wire must be embedded flush or below surface of plastic and centered at the location shown. Particle-hole sizes are not critical, but should not exceed .031 inch (0.79 mm) in diameter and depth, and must be centered as shown, ±.005 inch (0.13 mm).
5. Additional layers of shim stock may be used as necessary.
6. Identification marking shall be permanent and legible. Location and size of characters are not critical but shall not interfere with or obscure the radiographic image details.

FIGURE 5. Image quality indicator (optional) - Continued.

Downloaded from http://www.everyspec.com

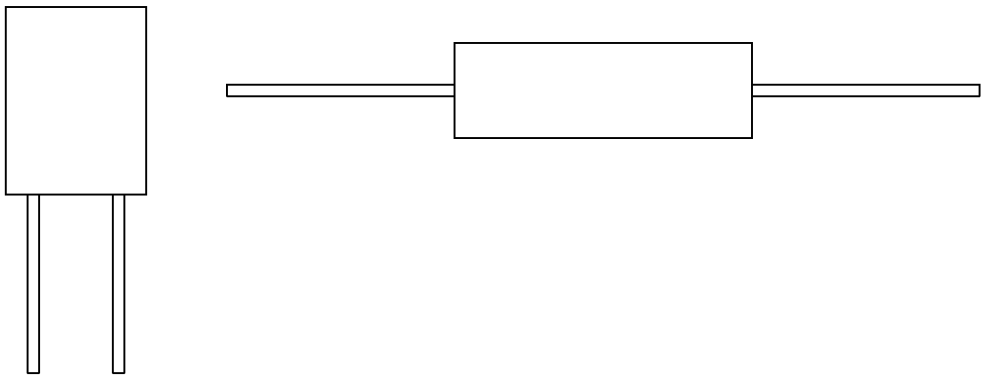

FIGURE 6. Viewing planes for radiographic inspection.

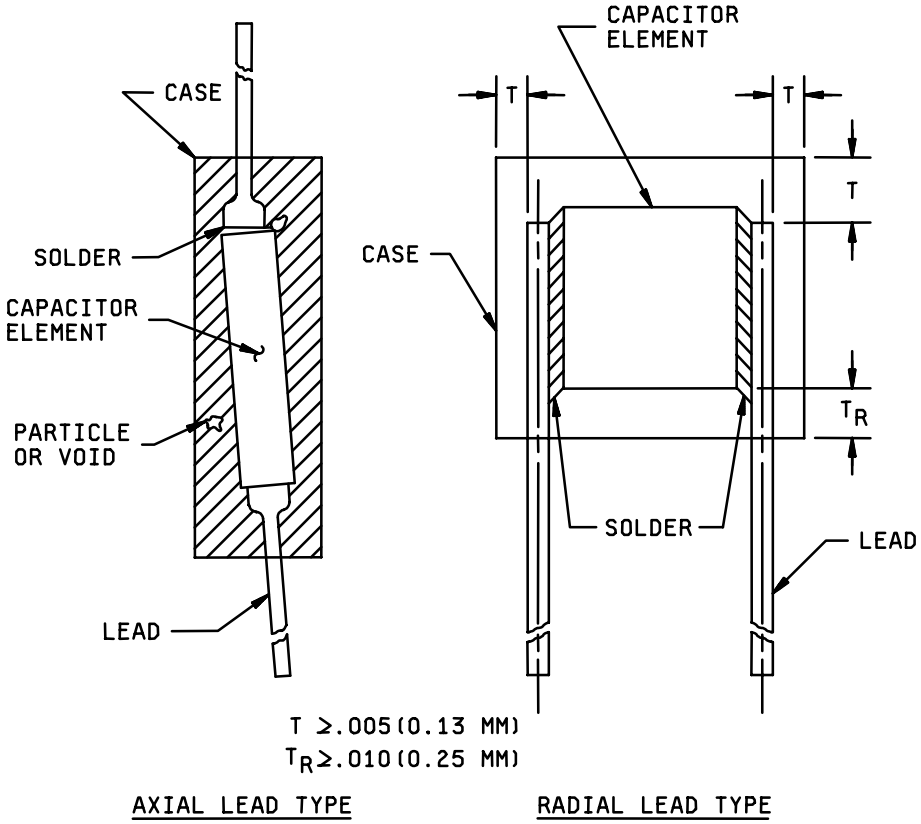

FIGURE 7. Radiographic inspection criteria.

Downloaded from http://www.everyspec.com

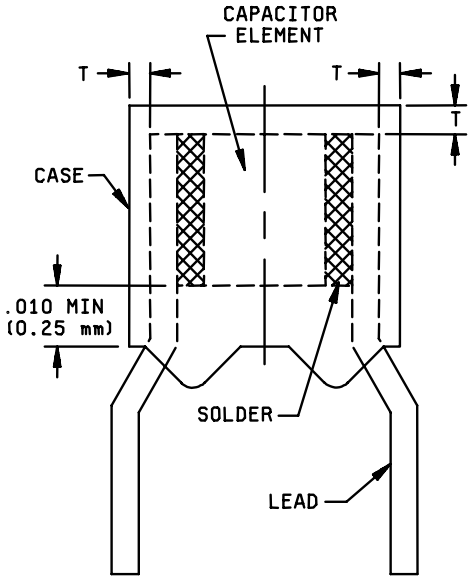

T ≥.005(0.13 mm)

CCR05

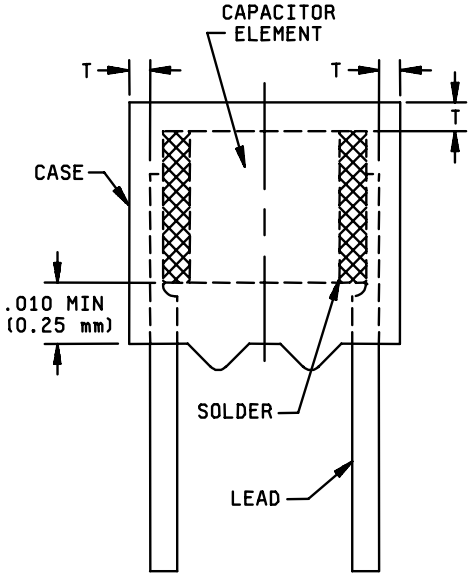

T ≥.005(0.13 mm)

CCR06

RADIAL LEAD TYPE WITH STANDOFFS

* FIGURE 7. Radiographic inspection criteria - Continued.

Downloaded from http://www.everyspec.com

5. PACKAGING

* 5.1 Packaging. For acquisition purposes, the packaging requirements shall be as specified in the contract or order (see 6.2). When packaging of materiel is to be performed by DoD or in-house contractor personnel, these personnel need to contact the responsible packaging activity to ascertain packaging requirements. Packaging requirements are maintained by the Inventory Control Point's packaging activities within the Military Service or Defense Agency, or within the military service's system commands. Packaging data retrieval is available from the managing Military Department's or Defense Agency's automated packaging files, CD-ROM products, or by contacting the responsible packaging activity.

6. NOTES

(This section contains information of a general or explanatory nature that may be helpful, but is not mandatory.)

6.1 Intended use. These capacitors are primarily designed for use where compensation is needed to counteract reactive changes, caused by temperature variations, in other circuit components. However they can be used in any precision-type circuit where their characteristics are suitable. Ceramic capacitors are substantially smaller than paper or mica units of the same capacitance and voltage rating. They can be used where mica or paper capacitors have too wide a capacitance tolerance. The lead placement makes ceramic capacitors suitable for printed-circuit use. Capacitors covered by this specification are unique due to the fact that they must be able to operate satisfactorily in military systems under the following demanding conditions: Extreme temperatures (-55°C to +125°C), vibration (20 G's), and damp environments. These capacitors also offer established reliability that is verified under a qualification system. Commercial components are not designed to withstand these military conditions.

6.2 Acquisition requirements. Acquisition documents must specify the following:

a. Title, number, and date of this specification.

b. Title, number, and date of the applicable specification sheet.

c. The complete PIN (see 3.1 and 1.2.1).

d. Required number of radiographic views and planes, if other than that specified (see 4.7.18c).

e. Packaging requirements.

* 6.3 Qualification. With respect to products requiring qualification, awards will be made only for products that are, at the time of award of contract, qualified for inclusion in Qualified Products List whether or not such products have actually been so listed by that date. The attention of the contractors is called to these requirements, and manufacturers are urged to arrange to have the products that they propose to offer to the Federal Government tested for qualification in order that they may be eligible to be awarded contracts or orders for the products covered by this specification. Information pertaining to qualification of products may be obtained from the Defense Supply Center, Columbus, ATTN: DSCC-VQP, PO Box 3990, Columbus, OH 43216-5000, or by e-mail to vqp.chief@dla.mil.

6.3.1 Copies of SD-6, "Provisions Governing Qualification" are available online at http://assist.daps.dla.mil/quicksearch/ or www.dodssp.daps.mil or from the Standardization Document Order Desk, 700 Robbins Avenue, Building 4D, Philadelphia, PA 19111-5094.

6.4 PIN. This specification requires a PIN that describes codification or classification and appropriate references to associated documents (see 1.2.1 and 3.1).

* 6.5 Characteristic. To facilitate use of the curves on figure 1, maximum and minimum readings at -55°C, -40°C, -10°C, +45°C, +65°C, +85°C, and +125°C are given in table XI.

6.6 Standard capacitance types. Equipment designers should refer to MIL-HDBK-198, "Capacitors, Selection and Use of", for standard capacitor types and selected values chosen from this specification. MIL-HDBK-198 provides a selection of standard capacitors for new equipment design.

Downloaded from http://www.everyspec.com

TABLE XI. Points read from tolerance envelope on figure 1.

Characteristic	Permissible capacitance change from capacitance at +25°C (ppm)							
	At -55°C		At -40°C		At -10°C			
	Max	Min	Max	Min	Max	Min		
CG	4,300	-2,200	3,400	-1,900	1,700	-1,100		
CH	7,300	-4,400	5,800	-3,700	2,900	-2,000		
CJ	13,300	-9,300	10,500	-7,600	5,400	-4,200		
CK	26,100	-19,700	20,800	-16,100	10,700	-8,600		
	At +45°C		At +65°C		At +85°C		At +125°C	
	Max	Min	Max	Min	Max	Min	Max	Min
CG	600	-700	1,100	-1,400	1,700	-1,800	3,000	-3,000
CH	1,300	-1,500	2,400	-2,500	3,600	-3,600	6,000	-6,000
CJ	2,300	-2,700	4,700	-5,100	7,200	-7,200	12,000	-12,000
CK	5,000	-5,500	10,000	-10,400	15,000	-15,000	25,000	-25,000

6.7 Subject term (key word) listing.

Capacitance
Parts per million
Statistical process control

6.8 Environmentally preferable material. Environmentally preferable materials should be used to the maximum extent possible that the material meets or exceeds the operational and maintenance requirements, and promotes economically advantageous life cycle costs. Table XII lists the Environmental Protection Agency (EPA) top seventeen hazardous materials targeted for major usage reduction. If any of these hazardous materials are required, it is recommended that it be used only when other materials cannot meet performance requirements.

TABLE XII. EPA top seventeen hazardous materials.

Benzene	Dichloromethane	Tetrachloroethylene
Cadmium and Compounds	Lead and Compounds	Toluene
Carbon Tetrachoride	Mercury and Compounds	1,1,1 - Trichloroethane
Chloroform	Methyl Ethyle Ketone	Trichloroethyene
Chromium and Compounds	Methyl Isobutyl Ketone	Xylenes
Cyanide and Compounds	Nickel and Compounds	

6.9 Changes from previous issue. The margins of this specification are marked with asterisks to indicate where changes from the previous issue were made. This was done as a convenience only and the Government assumes no liability whatsoever for any inaccuracies in these notations. Bidders and contractors are cautioned to evaluate the requirements of this document based on the entire content irrespective of the marginal notations and relationship to the last previous issue.

Downloaded from http://www.everyspec.com

APPENDIX

PROCEDURE FOR QUALIFICATION INSPECTION

10 SCOPE

10.1 This appendix details the procedure for submission of samples for qualification inspection of capacitors covered by this specification. This appendix is a mandatory part of the specification. The information contained herein is intended for compliance. The procedure for extending qualification of the required sample to other capacitors covered by this specification is also outlined herein.

20 APPLICABLE DOCUMENTS.

DEPARTMENT OF DEFENSE STANDARDS

MIL-STD-1276 - Leads for Electronic Component Parts.

30 SUBMISSION

30.1 Sample.

* 30.1.1 Single-style submission. A sample of the size required in the qualification inspection table, of the highest capacitance value in each voltage rating in each operating temperature range and voltage-temperature limit in each style for which qualification is sought shall be submitted.

30.1.2 Combined style submission. Samples as shown in table XIII in each qualification group for which qualification is sought shall be submitted.

40 EXTENT OF QUALIFICATION

40.1 Single-style submission. Capacitance-range qualification will be restricted to values equal to and less than the capacitance value submitted. Capacitance-tolerance qualification will be restricted to tolerances equal to and wider than the tolerance submitted. DC rated voltage, operating temperature range, and voltage-temperature limit qualification will be restricted to that submitted.

40.2 Combined style submission. Combined style submission shall be restricted as shown in table XIII. Qualification of ER styles with standoffs will be extended to similar ER and non-ER styles without standoffs as follows:

Qualification to ER standoff	Will extend qualification to	
	ER without standoff	non-ER without standoff
CCR05	CCR05	CC05
CCR06	CCR06	CC06

Downloaded from http://www.everyspec.com

TABLE XIII. Combined style submission.

Qualification group	ER PIN	Number of samples	Non-ER PIN	Number of samples	Will qualify 1/
I	CCR05CG331GM	25	CC05CG331GM	16	CCR05, 06, 07, 08, 09, CC05, 06, 07, 08, 09 in CG and CH characteristics; B, C, D, F, G, J, K cap. tolerance; 200, 100, and 50 volts; FRL M.
	CCR05CG332GM	25	CC05CG332GM	16	
	CCR08CG472GM	25	CC08CG472GM	19	
	CCR08CG683GM	25	CC08CG683GM	19	
II	CCR75CG750GM	25	CC75CG750GM	16	CCR75, 76, 77, 78, 79, CC75, 76, 77, 78, 79 in CG and CH characteristics; B, C, D, F, G, J, K cap. tolerance; 200, 100, and 50 volts; FRL M.
	CCR75CG681GM	25	CC75CG681GM	16	
	CCR79CG103GM	25	CC79CG103GM	19	
	CCR79CG823GM	25	CC79CG823GM	19	

1/ ER style qualification will qualify equivalent non-ER style. Non-ER style qualification will qualify non-ER style only.
2/ For qualification of style CCR05 with standoffs, see 40.2.

50. SOLDER DIP (RETINNING) LEADS

50.1 Solder dip (retinning). The manufacturer may solder dip/retin the leads of capacitors supplied to this specification, provided the solder dip process (see 50.2) or an equivalent process has been approved by the qualifying activity.

* 50.2 Qualifying activity approval. Approval of the solder dip process will be based on one of the following options:

a. When the original lead finish qualified was hot solder dip lead finish 52 in accordance with MIL-STD-1276 (NOTE: The 200 microinch maximum thickness is not applicable), the manufacturer shall use the same solder dip process for retinning as was used in the original manufacture of the capacitor.

b. When the lead originally qualified was not hot solder dip lead finish 52 of MIL-STD-1276 as prescribed in 50.2a, approval for the process to be used for solder dip shall be based on the following procedure:

(1) Thirty samples of any capacitance value for each style and lead finish shall be subjected to the manufacturer's solder dip process. The capacitors shall then be subjected to all group A, subgroup 1 post-electrical tests, with no defects allowed.

(2) Ten of the thirty samples shall then be subjected to the solderability test, with no defects allowed.

(3) The remaining 20 samples shall be subjected to the resistance to soldering heat test, followed by the moisture resistance test, with no defects allowed.

50.3 Solder dip/retinning options. The manufacturer may solder dip/retin as follows:

a. As a corrective action if the lot fails the group A solderability test.

* b. Following the solder dip/retinning process, the electrical tests as specified in group A, subgroup 2, shall be performed on a 25 piece sample for each hour of manufacturing. In the event of one or more defects, the production lot (or lots) produced during the hour from which the defects originated shall be subjected to 100 percent testing for dielectric withstanding voltage, insulation resistance (at 25°C), capacitance, and dissipation factor. The percent defective allowable (PDA) shall be the same as that allowed for subgroup 1 of the group A inspection. Following these tests, the manufacturer shall submit the lot to the group A solderability test as specified in 4.7.15.

Downloaded from http://www.everyspec.com

c. PPM data following solder dip/retinning shall be reported each six months. The calculation method shall be in accordance with EIA-554-1.

Downloaded from http://www.everyspec.com

Custodians:
Army - CR
Navy - EC
Air Force - 11
DLA - CC

Review activities:
Army - MI
Navy - AS, MC, OS, SH
Air Force - 19, 99

Preparing activity:
DLA - CC

(Project 5910-2224)

NOTE: The activities listed above were interested in this document as of the date of this document. Since organizations and responsibilities can change, you should verify the currency of the information above using ASSIST Online database at www.dodssp.daps.mil.