Downloaded from http://www.everyspec.com

MIL-HDBK-1003/8A
NOTICE 2
30 December 1991

MILITARY HANDBOOK

EXTERIOR DISTRIBUTION OF STEAM, HIGH TEMPERATURE HOT WATER, CHILLED WATER, NATURAL GAS, AND COMPRESSED AIR

TO ALL HOLDERS OF MIL-HDBK-1003/8A

1. THE FOLLOWING PAGES OF MIL-HDBK-1003/8A HAVE BEEN REVISED AND SUPERSEDE THE PAGES LISTED:

NEW PAGE	DATE	SUPERSEDED PAGE	DATE
iii	30 December 1991	iii	15 August 1991
iv	30 December 1991	iv	15 August 1990
v	30 December 1991	v	15 August 1991
vi	30 December 1991	vi	15 August 1990
vii	30 December 1991	vii	15 August 1990
viii	30 December 1991	viii	15 August 1990
1	30 December 1991	1	Reprinted w/o Change
2	30 December 1991	2	15 August 1990
3	30 December 1991	3	15 August 1990
4	30 December 1991	4	Reprinted w/o Change
9	30 December 1991	9	15 August 1990
10	30 December 1991	10	15 August 1990
13	30 December 1991	13	15 August 1990
14	30 December 1991	14	Reprinted w/o Change
37	30 December 1991	37	15 August 1990
38	30 December 1991	38	15 August 1990
41	30 December 1991	41	15 August 1990
42	30 December 1991	42	15 August 1990
42a	30 December 1991		New Page
45	30 December 1991	45	15 August 1990
46	30 December 1991	46	Reprinted w/o Change
47	30 December 1991	47	15 August 1990
48	30 December 1991	48	15 August 1990
63	30 December 1991	63	Reprinted w/o Change
64	30 December 1991	64	30 August 1991
81	30 December 1991	81	Reprinted w/o Change
82	30 December 1991	82	15 August 1990
83	30 December 1991	82	15 August 1990
84	30 December 1991	82	15 August 1990
85	30 December 1991	82	15 August 1990

2. RETAIN THIS NOTICE AND INSERT BEFORE TABLE OF CONTENTS.

Downloaded from http://www.everyspec.com

3. Holders of MIL-HDBK-1003/8A will verify that all changes indicated above have been made. This notice page will be retained as a check sheet. This issuance, together with appended pages, is a separate publication. Each notice is to be retained by stocking points until the Military Handbook is completely revised or cancelled.

CUSTODIANS:
NAVY-YD

PREPARING ACTIVITY:
NAVY-YD

PROJECT NO.
FACR-1063

DISTRIBUTION STATEMENT A. Approved for public release; distribution is unlimited.

Downloaded from http://www.everyspec.com

FOREWORD

This military handbook has been developed from an extensive evaluation of shore establishment facilities, surveys of new materials' availability and construction methods, selections from the best design practices of the Naval Facilities Engineering Command (NAVFACENGCOM), other government agencies and the private sector. MIL-HDBK-1003/8A uses and references design data standards established and validated by national professional societies, associations, and technical institutes. Deviations from these criteria, in planning, engineering, design and construction of naval shore facilities, cannot be made without prior approval of NAVFACENGCOM HQ Code 04.

Design methods and practices cannot remain static any more than the functions they serve or the technologies used. Accordingly, recommendations for improvement are encouraged and should be furnished on the DD Form 1426 provided inside the back cover to Commander, Western Division, Naval Facilities Engineering Command, Code 406, Building 203, San Bruno, CA 94066, telephone (415) 244-3331.

THIS HANDBOOK SHALL NOT BE USED AS A REFERENCE DOCUMENT FOR PROCUREMENT OF FACILITIES CONSTRUCTION. IT IS TO BE USED IN THE PURCHASE OF FACILITIES ENGINEERING STUDIES AND DESIGN (FINAL PLANS, SPECIFICATIONS, AND COST ESTIMATES). DO NOT REFERENCE IT IN MILITARY OR FEDERAL SPECIFICATIONS OR OTHER PROCUREMENT DOCUMENTS.

Downloaded from http://www.everyspec.com

MECHANICAL ENGINEERING CRITERIA MANUALS

Criteria Manual	Title	Preparing Activity
DM-3.01	Plumbing Systems	WESTDIV
MIL-HDBK-1003/2	Incinerators	WESTDIV
DM-3.03	Heating, Ventilating, Air Conditioning, and Dehumidifying Systems	WESTDIV
DM-3.4	Refrigeration Systems for Cold Storage	WESTDIV
DM-3.5	Compressed Air and Vacuum Systems	WESTDIV
MIL-HDBK-1003/6	Central Heating Plants	NEESA
MIL-HDBK-1003/7	Steam Power Plants - Fossil Fueled	NEESA
MIL-HDBK-1003/8A	Exterior Distribution of Steam, High Temperature Water, Chilled Water, Natural Gas, and Compressed Air	WESTDIV
DM-3.09	Elevators, Escalators, Dumbwaiters, Access Lifts, and Pneumatic Tube Systems	WESTDIV
DM-3.10	Noise and Vibration Control for Mechanical Equipment (Tri-Service TM-5-805-4, AFM 88-37)	ARMY
MIL-HDBK-1003/11	Diesel Electric Generating Plants	WESTDIV
MIL-HDBK-1003/12	Boiler Controls	NEESA
MIL-HDBK-1003/13	Solar Heating of Buildings and Domestic Hot Water	NCEL
DM-3.14	Power Plant Acoustics (Tri-Service TM-5-805-9, AFM 88-20)	ARMY
MIL-HDBK-1003/17	Industrial Ventilation Systems	NEESA
MIL-HDBK-1003/19	Design Procedures for Passive Solar Buildings	NCEL

Downloaded from http://www.everyspec.com

EXTERIOR DISTRIBUTION OF STEAM, HIGH TEMPERATURE WATER, CHILLED WATER, NATURAL GAS, AND COMPRESSED AIR

CONTENTS

			Page
Section 1		INTRODUCTION	
	1.1	Scope	1
	1.2	Cancellation	1
	1.3	Related Criteria	1
Section 2		PLANNING FACTORS	
	2.1	Types of Exterior Distribution Systems	2
	2.1.1	Steam and Condensate	2
	2.1.2	Hot Water	2
	2.1.3	Compressed Air	2
	2.1.4	Chilled Water	2
	2.1.5	Cooling or Condensing Water	2
	2.1.6	Natural Gas	2
	2.2	Naval Facilities Guide Specifications (NFGS) Related to Distribution Systems	3
	2.2.1	NFGS-02685, Exterior Buried Natural Gas Distribution Systems	3
	2.2.2	NFGS-02693, Exterior Shallow Trench Heat Distribution System	3
	2.2.3	NFGS-02694, Exterior Underground Heat Distribution Systems	3
	2.2.4	NFGS-02695, Exterior Aboveground Steam Distribution System	3
	2.2.5	NFGS-02696, Exterior Piping Insulation	4
	2.2.6	NFGS-02697, Exterior Buried Pumped Condensate Return System	4
	2.2.7	NFGS-02698, Exterior Buried Preinsulated Water Piping	4
	2.2.8	Exterior Compressed Air Piping System	4
	2.3	Loads and Distribution System Locations	4
	2.3.1	Requirements for Individual Facilities	5
	2.3.2	System Load Demand Factors	5
	2.3.3	Aboveground and Underground Systems	5
	2.3.4	Distribution Routes	5
	2.3.4.1	Aboveground Piping Routes	5
	2.3.4.2	Buried Piping Routes	8
	2.3.5	Economic Studies	8
	2.3.5.1	Annual Owning, Operating, and Maintenance Costs	8
	2.3.5.2	Steam Versus High Temperature Water Distribution	8
	2.3.5.3	High-Pressure (above 50 psig) (344.5 kPa) Steam Versus Low-Pressure (0 to 14 psig) (0 to 103.4 kPa) Steam Distribution	8
	2.3.6	Insulation for Shallow Trench Systems Which Exceed 500 Feet	8

Downloaded from http://www.everyspec.com

Page

2.3.6.1 Heat Loss Formulas 8
2.3.6.2 Heat Loss and Cost Relationship 10
2.4 Federal Agency Approved System Suppliers 10
2.4.1 Class A, B, C, and D Ground Water Conditions 10
2.4.2 Class B, C, and D Ground Water Conditions 10

Section 3 GENERAL DESIGN FACTORS
3.1 Design Responsibilities for Underground Pre-engineered Heat Distribution Systems 14
3.1.1 Design by Project Designer 14
3.1.2 Design by System Supplier 14
3.2 Distribution Site Location 15
3.2.1 Location Factors 15
3.2.2 Subsurface Explorations 15
3,2,2,1 Timing of Survey 15
3.2.2.2 Time of Year 15
3.2.2.3 Exploration Considerations 15
3.2.2.4 Test Explorations 15
3.2.2.5 Depth of Exploration 19
3.2.2.6 Special Ground Considerations 19
3.2.2.7 Permeability Tests 19
3.2.2.8 Test Results 19
3.2.2.9 Soil Resistivity 19
3.2.2.10 Soil Corrosiveness Classification 20
3.2.2.11 Soil Stability 20
3.2.2.12 Soil Load-Bearing Capacity 20
3.2.3 Site Classification 20
3.2.3.1 Class A, Severe 20
3.2.3.2 Class B, Bad 20
3.2.3.3 Class C, Moderate 21
3.2.3.4 Class D, Mild 21
3.2.4 Analyzing Site Classification for Application of Pre-Engineered Underground System 21
3.2.5 Analyzing Site Classification for Application of Shallow Concrete Trench System 21
3.2.5.1 Soils 21
3.2.5.2 Settlement of Trenches 22
3.2.5.3 Under-Trench Drainage Systems 22
3.2.6 Reinforced Thermosetting Resin Plastic (RTRP) Pipe . . . 23
3.3 Service and Loads 23
3.3.1 Alternate Routes 23
3.3.2 Pressure Drop 23
3.3.3 Obstacles 23
3.3.4 Future Loads 23
3.3.5 Distribution Circuits 24
3.3.6 Route Types 24
3.3.6.1 Through Buildings 24

Downloaded from http://www.everyspec.com

Page

3.3.6.2 Exterior Steam Distribution 24
3.3.6.3 Aboveground Overhead Piping 24
3.3.6.4 Buried Piping 24
3.3.6.5 Condensate Return cost. 25
3.3.6.6 Choice of Route 25
3.3.6.7 Piping Layouts. 26
3.3.6.8 Underground 27
3.4 Insulation. 27
3.5 Miscellaneous 27

Section 4 SPECIFIC PIPING DESIGN FACTORS
4.1 Fluid Characteristics 28
4.1.1 Steam 28
4.1.2 Condensate. 28
4.1.3 High Temperature Water (HTW), Medium Temperature Water (MTW), and Low Temperature Hot Water (LTW). . . 28
4.1.4 Compressed Air. 28
4.1.5 Natural Gas 28
4.2 Distribution System Piping. 28
4.2.1 Equivalent Lengths of Piping. 28
4.2.2 Sizing of Distribution Piping 28
4.2.2.1 Minimum Pipe Size 28
4.2.2.2 Steam Piping. 28
4.2.2.3 Condensate Returns 37
4.2.2.4 High Temperature Water (HTW) Piping 39
4.2.2.5 Chilled Water Piping. 39
4.2.2.6 Condenser Water Piping. 39
4.2.2.7 Natural Gas Piping. 39
4.2.2.8 Compressed Air. 39
4.2.3 Piping Specifications and Codes 39
4.2.3.1 Steam Supply and Condensate Return. 41
4.2.3.2 High Temperature Water, Medium Temperature Water, and Low Temperature Water 41
4.2.3.3 Natural Gas and Compressed Air. 41
4.2.3.4 Chilled and Condenser Water 41
4.2.4 Thermal Expansion of Steel and Copper Pipe. 42
4.2.4.1 Branch Lines. 42
4.2.4.2 Expansion Bends 42
4.2.4.3 Expansion Joints. 42
4.2.4.4 Flexibility Analysis. 42a
4.2.4.5 Stress Analysis 43
4.2.5 Insulation of Piping Systems. 43
4.2.5.1 Insulation Thickness. 43
4.2.5.2 Jackets 43
4.2.6 Drainage Provisions 43
4.2.6.1 Pitch 43
4.2.6.2 Drips and Vents 45

Downloaded from http://www.everyspec.com

Page

4.2.6.3 Condensate Systems 45
4.2.7 Pipe Anchors 46
4.2.7.1 Location 48
4.2.7.2 Specification 48
4.2.7.3 Strength 48
4.2.7.4 Guying 48
4.2.7.5 Embedding 48
4.2.8 Supports 48
4.2.8.1 Low Elevations 48
4.2.8.2 High Elevations 48
4.2.8.3 Long Spans 48
4.2.8.4 Underground Conduits 48
4.2.9 Finish and Protection 50
4.3 Concrete Trench Design 50
4.3.1 Depth of Trench 50
4.3.2 Drainage of Trench 50
4.3.3 Tops 50
4.3.4 Details 50
4.3.5 Valve Manholes 51
4.3.6 Inspection Ports 51
4.3.7 Crossings 51
4.3.8 Precast Concrete Shallow Trench Options 51
4.4 Manholes 51
4.4.1 Drainage 51
4.4.2 Waterproofing 51
4.4.3 Pipe Entry 51

APPENDIX

APPENDIX A 65

FIGURES

Figure 1 Relation Between Heat Loss and System Costs 11
2 Total Cost of Owning and Operating Three Hypothetical Systems 11
3 Chart for Weight-Flow Rate and Velocity of Steam (30 psig) (206.7 kPa) 31
4 Chart for Weight-Flow Rate and Velocity of Steam (50 psig) (344.5 kPa) 31
5 Chart for Weight-Flow Rate and Velocity of Steam (100 psig) (689.4 kPa) 32

Downloaded from http://www.everyspec.com

Section 1: INTRODUCTION

1.1 Scope. Data and criteria in this military handbook apply to design of exterior distribution piping systems for supplying certain central generating plant services to various buildings and facilities and for returning such spent services to the plants.

1.2 Cancellation. This handbook, MIL-HDBK-1003/8A, cancels and supersedes MIL-HDBK-1003/8 of September 1987.

1.3 Related Criteria. All documents referenced in this handbook are listed in the reference section.

Downloaded from http://www.everyspec.com

Section 2: PLANNING FACTORS

2.1 Types of Exterior Distribution Systems. Types of exterior distribution systems are as follows:

2.1.1 Steam and Condensate. These systems supply heat in the form of steam from central steam generating plants. Several buildings, building groups, or ship berthing facilities may be supplied with steam for domestic hot water and/or for space heating. Heating equipment using steam includes unit heaters, radiators, convectors, heating coils, and other devices. Process equipment using steam includes hot water heaters, laundry machinery, cleaning/plating tanks, kitchen equipment, and other devices. Condensate is returned to the central plant whenever possible.

2.1.2 Hot Water. System circulates hot water which supplies heat from a central heating plant to several buildings for space heating, domestic hot water, and process work, and returns the water to the central plant. High Temperature Water (HTW) systems operate at 260 degrees Fahrenheit (F) (127 degrees Celsius (C)) and higher; Medium Temperature Water (MTW) systems operate between 200 degrees F (93 degrees C) to 259 degrees F (126 degrees C); and Low Temperature Water (LTW) systems operate below 200 degrees F (93 degrees C). Material shall be selected to the same specifications as for High Temperature Water systems, except that Military Specification (Mil. Spec.) MIL-P-28584A, Pipe and Pipe Fittings, Glass Fiber Reinforced Plastic for Condensate Return Lines, plastic piping may be used for LTW distribution systems which have maximum of 125 psig at 250 degrees F (refer to para. 2.2.6).

2.1.3 Compressed Air. System supplies compressed air from a compressor plant to docks, air start systems, shops, hangars, and other structures.

2.1.4 Chilled Water. System circulates chilled water from a central refrigeration plant to several buildings for space cooling and returns the water to the central plant (refer to para. 2.2.7).

2.1.5 Cooling or Condensing Water. System distributes cooling water from a central source (such as a bay, stream, or cooling tower) to several facilities for condensing steam or refrigerants, for cooling water jackets, or stuffing boxes. The water is then returned to the source (cooling tower) or sent to waste in once-through systems.

2.1.6 Natural Gas. System distributes natural gas or propane for gas burning operations.

2.2 Naval Facilities Guide Specifications (NFGS) Related to Distribution Systems. The following NFGSs are for use in the design of the exterior distribution systems discussed in this handbook.

Downloaded from http://www.everyspec.com

2.2.1 NFGS-02685, Exterior Buried Natural Gas Distribution Systems. NFGS-02685 covers these requirements for maximum system working pressures of 60 psig at 100 degrees F for exterior distribution systems for natural gas. Project drawings shall indicate the design for the entire piping system.

2.2.2 NFGS-02693, Exterior Shallow Trench Heat Distribution System. NFGS-02693 covers the requirements for exterior shallow trench heat distribution systems, including concrete trench, manholes, piping, pipe anchors, pipe supports, interface with each manhole and watershed to aboveground piping. The specification covers system components for working pressure of 150 psig (1034 kiloPascal (kPa)) steam at 366 degrees F (185 degrees C) and 125 psig (862 kPa) condensate at 250 degrees F (121 degrees C) or hot water at 450 degrees F (232 degrees C). Show the design for the entire piping systems and shallow concrete trench systems on the project drawings.

2.2.3 NFGS-02694, Exterior Underground Heat Distribution Systems. NFGS-02694 (formerly NFGS-15705) covers the requirements for Contractor designing and providing exterior buried factory-prefabricated preinsulated or pre-engineered preinsulated steam and condensate piping systems and hot water piping systems for Class A, B, C, and D ground water conditions including concrete pipe anchors exterior of manholes, interface with each manhole, and the watershed to aboveground piping. The specification covers system components for working pressure of 150 psig (1034 kPa) steam at 366 degrees F (185 degrees C) and 125 psig (862 kPa) condensate at 250 degrees F (121 degrees C) or hot water at 450 degrees F (232 degrees C). Show the design for the aboveground piping, the manholes, the piping within manholes, and the piping not in approved conduit systems on the drawings. The Contractor designs and provides buried factory-prefabricated preinsulated piping in a conduit or pre-engineered insulated piping system for which a Federal Agency Approved Brochure has been issued including concrete pipe anchors exterior of manholes, interface with each manhole and building, and the watershed to aboveground piping.

2.2.4 NFGS-02695, Exterior Aboveground Steam Distribution System. NFGS-02695 covers the requirements for exterior aboveground steam and condensate (hot water) piping systems: exposed to the weather exterior of buildings and supported on pedestals or poles; on piers, under piers, and in trenches on piers; and in tunnels, in manholes, and related work. The work also includes providing buried factory-prefabricated preinsulated steam and condensate piping under roads. The specification covers system components for working pressure of 150 psig (1034 kPa) steam at 366 degrees F (185 degrees C) and 125 psig (862 kPa) condensate at 250 degrees F (121 degrees C). Show the design for the aboveground piping, and the piping under roads on project drawings. The design includes manholes, the piping within manholes, (buried factory-prefabricated preinsulated piping in a conduit or pre-engineered insulated piping under roads for which a Federal Agency Approved Brochure has been issued), concrete pipe anchors, interface with each manhole, and the watershed to aboveground piping.

Downloaded from http://www.everyspec.com

2.2.5 NFGS-02696, Exterior Piping Insulation. NFGS-02696 covers field-applied exterior piping insulation, insulation requirements for exterior steam piping, exterior condensate piping including aboveground piping, piping on piers, piping under piers, piping in trenches on piers, piping in tunnels, and piping in manholes.

2.2.6 NFGS-02697, Exterior Buried Pumped Condensate Return System. NFGS-02697 covers the requirements for exterior buried factory-prefabricated preinsulated pumped condensate (hot water) return piping systems suitable for installation in Class A, B, C, and D ground water conditions, including piping in manholes, plastic piping systems for which a Federal Agency Approved Brochure has been issued, and related work. Use the plastic carrier piping only for sizes 2, 3, 4, 5, 6, 8, and 10 inches. Thus, the connecting system piping should be of equal size or increased to the next size of the plastic carrier piping. NFGS-02697 also covers Contractor's responsibilities which include the following:

a) design,

b) provide exterior buried factory-prefabricated preinsulated pumped condensate (hot water), and

c) provide plastic piping systems for Class A or Class B ground water conditions including concrete pipe anchors exterior of manholes, interface with each manhole, and the watershed to aboveground piping.

Show the design for the aboveground piping, the manholes, the piping within manholes, and the piping not in approved prefabricated conduit or pre-engineered systems on project drawings. The Contractor designs and provides direct buried factory-prefabricated preinsulated piping in a conduit or pre-engineered insulated piping system for which a Federal Agency Approved Brochure has been issued, including concrete piping anchors exterior of manholes, interface with each manhole, and the watershed to aboveground piping.

2.2.7 NFGS-02698, Exterior Buried Preinsulated Water Piping. NFGS-02698 covers the requirements for exterior buried factory-prefabricated preinsulated domestic water piping, including hot domestic water piping, recirculating hot domestic water piping, chilled water piping, chill-hot (dual-temperature) water piping, and hot water piping. Show the design for the entire piping systems on project drawings.

2.2.8 Exterior Compressed Air Piping System. Use NFGS-02682, Exterior Fuel Distribution System, for the requirements of furnishing and installing exterior compressed air piping.

2.3 Loads and Distribution System Locations. For approximate conditions, refer to Table 1.

Table 2
Advantages and Disadvantages of Steam and
Hot Water Distribution Systems

STEAM SYSTEM ADVANTAGES

1. Smaller return pipe sizes are required.
2. Pumping costs for maintaining circulation are lower. Motor size is a fraction of that required for water, as is operating time in some cases.
3. Maintenance costs are lower. The small difference of pressure under which the system components operate reduces wear and maintenance expense to a minimum.
4. When the condensate is repeatedly recycled through the boiler and system, makeup water requirements and corrosion are negligible, and equipment life is lengthened.

STEAM SYSTEM DISADVANTAGES

1. Larger supply piping sizes are required.
2. Larger expansion loops, joints and swing connections are required.
3. Convectors and radiators must be installed in a pitched position.
4. Additional specialty items such as traps, lifts and in some cases pressure-reducing valves are required.
5. Condensate systems fail frequently, causing significant losses of heat.

Reference:
ASHRAE Handbook -
HVAC Systems and Applications

HOT WATER SYSTEM DISADVANTAGES

1. Fast, uniform response to instantaneous load changes using minimum pipe sizes.
2. Piping may be installed level or at any pitch.
3. Smaller supply pipe sizes are used.
4. Forced circulation provides, in the total water mass, the desirable inertia effect which helps to diversify system load requirements contributing to uniform input at fuel burners.
5. Requires fewer specialty items.
6. Permits practical air elimination to minimize corrosion and maintenance.
7. Resetting of system supply water temperature to meet changing loads permits more efficient energy usage.

HOT WATER SYSTEM DISADVANTAGES

1. Larger motor sizes are required for circulating pumps.
2. Larger return pipe sizes are required.
3. Expansion tanks and air vents are required.
4. More maintenance is required due to increased equipment wear caused by longer operating times.
5. More intricate controls may be required, to compensate for areas with frequent load variations, in order to keep system in balance.

Reference:
ASHRAE Handbook - Fundamentals

Downloaded from http://www.everyspec.com

Downloaded from http://www.everyspec.com

2.3.6.2 Heat Loss and Cost Relationship. To optimize the costs the designer must calculate the total owning and operating cost of different sections of the system, assuming use of one particular type of system configuration with various thicknesses of insulation. Only one type of system configuration needs to be considered because the optimum heat loss rate in a particular set of circumstances is not significantly different for different types of system configurations. As illustrated in Figure 1, the total owning and operating cost of a system is represented by a "U" shaped curve when cost is plotted against heat loss which is a function of insulation thickness. The curve is the sum of three other curves: the owning cost curve, which increases as heat loss increases; the maintenance cost curve, which is constant within limits regardless of heat loss; and the operating cost curve, which is directly proportional to the heat loss. The lowest point of the total cost curve is the minimum total owning and operating cost for the system, and the heat loss for the point is the optimum heat loss for the system. When total cost curves are generated for various types of system configurations for a particular site, the point of optimum heat loss is approximately the same for all the system configurations even though the total cost of owning and operating the different systems is different, as illustrated in Figure 2. Therefore, it is not necessary to calculate the insulation requirements for all types of system configurations.

2.4 Federal Agency Approved System Suppliers. The following list contains all approved system suppliers issued Federal Agency Letters of Acceptability required in NFGS-02694, Exterior Underground Heat Distribution System.

2.4.1 Class A, B, C, and D Ground Water Conditions.

a) Intergy Systems, Brecksville, OH
b) Perma Pipe, Niles, IL
c) Rovanco Pipe, Joliet, IL
d) E. B. Kaiser Company, Glenview, IL
e) Pittcon Preinsulated Pipes, Inc., Syracuse, NY
f) U. S. Polycon Corporation, Panama City, FL
g) Nova Group, Inc., Napa, CA
h) Thermacor Process, Inc., Fort Worth, TX
i) Sigma Piping Company, Inc., Incline Village, NV

2.4.2 Class B, C, and D Ground Water Conditions.

a) Thermal Pipe Systems, Media, PA

Downloaded from http://www.everyspec.com

Table 3
Insulation Thickness (in inches) to be Assessed in Calculations

	WITH HIGH TEMPERATURE WATER (above 250 degrees F)		WITH LOW TEMPERATURE WATER (250 degrees F and lower)		WITH STEAM (any pressure)	
Thermal Conductivity of Insulation (Btu/hr, square feet, degrees F/in.)	On the Supply Pipe	On the Return Pipe	On the Supply Pipe	On the Return Pipe	On the Supply Pipe	On the Condensate Pipe
Up to 0.2	1/2	1/2	1/2	0	1/2	0
	1	3/4	1/2	1/2	1/2	1/2
	1	1	1	1/2	1	0
	1-1/2	1	1	3/4	1	3/4
	1-1/2	1-1/2	1-1/2	3/4	1-1.2	0
	-	-	1-1/2	1	1-1/2	1
From 0.2 to 0.4	3/4	3/4	3/4	0	3/4	0
	1-1/2	1	3/4	3/4	3/4	3/4
	1-1/2	1-1/2	1-1/2	3/4	1-1/2	0
	2-1/2	2	1-1/2	1	1-1/2	3/4
	2-1/2	2-1/2	2	1	2-1/2	0
	-	-	2	1-1/2	2-1/2	1-1/2
From 0.4 to 0.6	2	2	2	0	2	0
	3	2	2	2	2	2
	3	3	3	2	3	0
	4	3	3	3	3	2
	4	4	4	2	4	0
	-	-	4	4	4	2
Above 0.6	3	3	3	0	3	0
	4	3	3	3	3	3
	4	4	4	3	4	0
	5	3	4	4	4	3
	5	5	5	3	5	0
	-	-	5	4	5	3

Downloaded from http://www.everyspec.com

Section 3: GENERAL DESIGN FACTORS

3.1 Design Responsibilities for Underground Pre-engineered Heat Distribution Systems. The project designer is responsible for accomplishing the following prior to project bidding:

a) Define site conditions for underground water classification (A, B, C, or D), soil corrosiveness, soil pH if less than 5.0, and potential soil load bearing problems.

b) Determine the general layout and essential characteristics of the system such as system media, maximum operating temperature and pressure, location and design of manholes, and branch runouts. The interface detail of the system at manhole walls shall be provided by the system supplier.

c) Design special elements of the system as required.

d) Calculate the maximum heat loss per lineal foot of the conduit in accordance with the procedures outlined in NFGS-02694.

3.1.1 Design by Project Designer. The project designer shall design on project drawings the exterior steam and condensate piping systems aboveground, the manholes, piping within manholes, and piping not in approved conduit systems. The project designer shall establish the system design parameters of the entire underground piping system, such as site classification, general layout, essential characteristics of the system, and specially designed elements of the system. The project designer is responsible for sizing the pipe, establishing the piping elevations, identifying the piping right-of-way, obstructions and utilities (plan and profile) within 25 feet (7.62 m) of the center line of the right-of-way, and every area within 25 feet of the center line that must be avoided; for example, paved areas and buildings. The project designer is also responsible for the location and sizing of manholes, the design of concrete manholes and the piping and equipment layout of manholes including valves, fittings, traps, expansion joints (when required), and manhole drains.

3.1.2 Design by System Supplier. The construction Contractor shall design and provide buried factory-prefabricated preinsulated piping in a conduit or pre-engineered insulated piping system for which a Federal Agency Approved Brochure has been issued. It is intended that the supplier of a Federal Agency approved system provide the details of design for his system in accordance with his Federal Agency Approved Brochure. The preapproved brochure and the design will address expansion loops, bends, offsets, concrete pipe anchors outside of manholes, interface with each manhole, and the watershed to aboveground piping. When prefabricated steel manholes are indicated, the system supplier is responsible for the structural design of the manhole and the manufacture of the complete manhole, including installation of valves, fittings, and other equipment as specified herein and indicated on the project

Downloaded from http://www.everyspec.com

pressure reducing valve is out of service. Provide a pressure gauge on the low pressure side. Where steam requirements are relatively large, above approximately 3,000 pounds/hour (1364 kg/hr), and subject to seasonal variation, install two reducing valves in parallel, sized to pass 70 percent and 30 percent of maximum flow. During mild spring and fall weather, set the large valve at a slightly reduced pressure so that it will remain closed as long as the smaller valve can supply the demand. During the remainder of the heating season reverse the valve settings to keep the smaller one closed except when the larger one is unable to supply the demand.

f) Safety Valves. Provide one or more relief or safety valves on the low pressure side of each reducing valve in case the piping and/or equipment on the low pressure side do not meet the requirements of the full initial pressure. The combined discharge capacity of the relief valves shall be such that the pressure rating of the lower pressure piping and equipment will not be exceeded. For special conditions refer to ASME B31.1 and ASHRAE Handbooks - Systems and Applications.

g) Takeoffs from Mains. Takeoffs from mains to buildings must be at the top of mains and located at fixed points of the mains, at or near anchor points. When a branch is short, valves at each takeoff are unnecessary. Takeoffs shall have valves when the branch is of considerable length or where several buildings are served. A 45 takeoff is preferred; 90 takeoffs are acceptable. Branch line slope of 1/2 inch (12.6 mm) should be used for lines less than 10 feet (3.05 m) in length and should be 1/2 inch per 10 feet (3.05 m) on branch lines longer than 10 feet.

4.2.2.3 Condensate Returns. Condensate returns are preferred if owning and operating costs of such a system are less than that of using and treating raw water for makeup. Factors favoring condensate return are: high area concentration of steam usage; restriction on condensate disposal; high raw water treatment costs; water treatment space unavailable; high cost of raw water; and high cost of fuel for feedwater heating. Design considerations are as follows:

a) Return Piping. Size condensate trap piping to conform with 30 to 150 psig (206.7 to 1033.5 kPa) steam piping in accordance with Tables 10 and 11 and interpolate these for other pressures.

b) Discharge Piping. Size discharge piping from condensate and heating pumps in accordance with pump capacities, which may be between one to three times the capacity of the steam system branch which they serve, depending on whether continuously or intermittently operated.

Downloaded from http://www.everyspec.com

Table 10
Return Pipe Capacities for 30 psig (206.7 kPa) Steam Systems (a)
(Capacity Expressed in lbs/hr)

	DROP IN PRESSURE (psi PER 100 ft IN LENGTH)				
PIPE SIZE (in.)	1/8	1/4	1/2	3/4	1
3/4	115	170	245	308	365
1	230	340	490	615	730
1-1/4	485	710	1,025	1,290	1,530
1-1/2	790	1,160	1,670	2,100	2,500
2	1,580	2,360	3,400	4,300	5,050
2-1/2	2,650	3,900	5,600	7,100	8,400
3	4,850	7,100	10,300	12,900	15,300
3-1/2	7,200	10,600	15,300	19,200	22,800
4	10,200	15,000	21,600	27,000	32,300
5	19,000	27,800	40,300	55,500	60,000
6	31,000	45,500	65,500	83,000	98,000

(a) Based on 0-4 psig maximum return pressure.

Table 11
Return Pipe Capacities for 150 psig (1033.5 kPa) Steam Systems (a)
(Capacity Expressed in lbs/hr)

	DROP IN PRESSURE (psi PER 100 ft IN LENGTH)					
PIPE SIZE (in.)	1/8	1/4	1/2	3/4	1	2
3/4	156	232	360	465	560	890
1	313	462	690	910	1,120	1,780
1-1/4	650	960	1,500	1,950	2,330	3,700
1-1/2	1,070	1,580	2,460	3,160	3,800	6,100
2	2,160	3,300	4,950	6,400	7,700	12,300
2-1/2	3,600	5,350	8,200	10,700	12,800	20,400
3	6,500	9,600	15,000	19,500	23,300	37,200
3-1/2	9,600	14,400	22,300	28,700	34,500	55,000
4	13,700	20,500	31,600	40,500	49,200	78,500
5	25,600	38,100	58,500	76,000	91,500	146,000
6	42,000	62,500	96,000	125,000	150,000	238,000

(a) Based on 1-20 psig maximum return pressure.

Downloaded from http://www.everyspec.com

4.2.3.1 Steam Supply and Condensate Return. Piping shall conform to ASME B31.1, except for underground prefabricated or pre-engineered type systems, in which case the entire system shall conform to NFGS-02694.

a) If a separate pump condensate return system is used, it shall conform to NFGS-02697.

b) For condensate provided as a part of an underground prefabricated, pre-engineered system, include Mil. Spec MIL-P-28584 plastic condensate piping in the specification as a Contractor's option for sites classified B, C, or D. Plastic piping is optional but encouraged for sites classified A. The Contracting Officer shall give specific approval for plastic condensate piping in Class A systems. Take particular care that the failure of high pressure steam drip traps shall not discharge high temperatures and pressures into the plastic condensate piping.

4.2.3.2 High Temperature Water, Medium Temperature Water, and Low Temperature Hot Water. Piping specifications and codes are as follows, except for underground prefabricated or pre-engineered types, in which case the entire system shall conform to NFGS-02694.

a) Piping. HTW metallic piping (450 degrees F maximum) (232 degrees C) and medium temperature water metallic piping shall conform to ASME B31.1.

b) Joints. Welded joints are preferred. Threaded joints are not permitted. Hold flanged joints to a minimum and use ferrous alloy gaskets in such joints. Avoid the use of copper and brass pipe.

c) Valves. All valves shall have cast steel bodies with stainless steel trim (no bronze trim). All valves shall be capable of being repacked under operational pressures. Use gate valves only as shutoff or isolation valves.

4.2.3.3 Natural Gas and Compressed Air. Piping shall conform to ASME B31.1 and B31.8 including guidance for abandoning existing gas lines. Note that ASME B31.8 requires that abandoned gas lines be physically disconnected from gas sources and purged prior to sealing. Shutoff valves are not an acceptable means of disconnect. Cathodic protection systems on lines to be abandoned should be evaluated for modifications required to ensure continuity of the systems after abandoned lines are disconnected or removed. Provide excess-flow (earthquake) shutoff valves in gas supply piping outside of each building served in earthquake zones 3 and 4. In addition, provide flexible connections. Gas piping and appurtenances from point of connection with existing system to a point approximately 5 feet (1.53 m) from the building shall conform to NFGS-02685.

4.2.3.4 Chilled and Condenser Water. Use Schedule 40 steel pipe in 10-inch (254 mm) size and smaller, and use 1/2-inch (12.5 mm) wall thickness steel

Downloaded from http://www.everyspec.com

pipe for 12-inch (305 mm) size and larger. RTRP pipe and PVC pipe are also acceptable. RTRP pipe and PVC pipe are available in 2 through 12-inch (51 through 305-mm) pipe sizes.

4.2.4 Thermal Expansion of Steel and Copper Pipe. Pipe expands with temperature increases (such as between installation and operating temperatures) as indicated in Table 12. Make provisions for the control of expansion in any piping system where thermal expansion is a factor. Wherever possible, provide for expansion of pipes by changes in direction of pipe runs.

4.2.4.1 Branch Lines. Where practicable, design branch line piping to provide for expansion inside buildings. Expansion control of branch lines should be designed so as to have no effect on mains.

4.2.4.2 Expansion Bends. Bends are to be factory fabricated except for RTRP pipe.

a) Loop Sections. Loops may be furnished in sections to facilitate delivery and handling.

b) Anchors. A reasonable distance between anchors for expansion loops is 200 feet (61 mm) for 125 psig (861.3 kPa) steam system. Expansion is usually kept at about 6 inches (150 mm) between anchors.

c) Cold Springing. Cold springing may be used in installations but no design stress relief is allowed for it. For credit permitted in thrust and moments, refer to ANSI B31.1.

4.2.4.3 Expansion Joints. Install expansion joints only where space restrictions prevent the use of other means. When necessary to use, expansion joints shall be in an accessible location and shall be one of the following types:

a) Mechanical Slip Joint. An externally guided joint designed for repacking under operating pressures. Hold maximum traverse of piping in expansion joints under 8 inches (203 mm).

b) Bellows Type Joint. Use these joints on steel pipe for thermal expansion with stainless steel bellows, guided and installed according to manufacturer's instructions. Make bellows or corrugations for absorbing vibrations or mechanical movements at ambient temperatures of copper or other materials suitable for the job conditions. A maximum travel of 4 inches (102 mm) is allowed for this type. RTRP expansion joints may be polytetrafluoroethylene bellows type.

c) Flexible Ball Joints. Install these joints according to manufacturer's instructions.

Downloaded from http://www.everyspec.com

4.2.4.4 Flexibility Analysis. Refer to ASME B31.1 for expansion and flexibility criteria and allowable stresses and reactions.

Downloaded from http://www.everyspec.com

e) Pumped Water Pipe. Pitch pumped water pipes (condensate, HTW, MTW, LTW, CHW, or condenser water) up or down in direction of flow at a minimum slope of 2-1/2 inches (64 mm) per 100-foot (30.5 m) length. Place drain valves at all low points and vents at high points.

4.2.6.2 Drips and Vents. Provide drips and vents as follows:

a) Drip Legs. Provide drip legs to collect condensate from steam piping and compressed air piping for removal by automatic moisture traps, or by manual drain valves for compressed air piping when practicable. Locate drip legs at low points, at the bottom of all risers, and at intervals of approximately 200 to 300 feet (61 to 91.5 m) for horizontally pitched pipe where a trap is accessible, and not over 500 feet (152.5 m) for buried underground pipe systems. On gas piping, drip legs are not usually required where dry gas is provided. Where there is moisture in the gas, provide drip legs and sediment traps in accordance with NFPA 54. Automatic traps are not utilized.

b) Water Piping. Vent piping, especially high-temperature water piping, at distribution piping high points.

c) Fuel Gas Piping. Provide capped dirt traps in vertical risers upstream of gas-burning devices.

4.2.6.3 Condensate Systems. Condensate systems are as follows:

a) Furnish a complete system of drip traps and piping to drain all steam piping of condensate from drip legs. Ensure drip piping to traps is the same weight and material as the drained piping.

b) Preferably, run a condensate line from a trap separately to a gravity condensate return main or to a nearby flash tank. (Refer to ASHRAE Handbooks - Systems and Applications for flash tank details and specific trap applications. Additionally, refer to Naval Civil Engineering Laboratory (NCEL) UG-0005, Steam Trap Users Guide.) However, a trap may be discharged through a check valve into the pumped condensate line if pressure in the trap discharge line exceeds the back pressure in the pumped condensate line during standby time of an intermittently operated pump. If the pumped condensate line is RTRP pipe, install a condensate cooling device, similar to that shown in Figure 10, to limit temperature of the condensate entering the line to less than 250 degrees F (121 degrees C).

c) Select traps using a safety load factor no greater than 2. The condensate load should be indicated on design drawings and may be determined for aboveground lines by using Table 13. The condensate load for underground distribution lines is determined from maximum heat loss as indicated by the design. With the tight safety load factor for sizing traps, an alternate

Downloaded from http://www.everyspec.com

method of expelling gasses during warmup is required. To this end, all strainers should have blowdown valves which will also be used for controlled warmup.

Table 13
Condensate Loads from Aboveground Heat Distribution Piping
(Pounds Per Hour Per 100 Linear Feet)

STEAM PRESSURE (psig)	STEAM PIPE SIZE (INCHES, DIAMETER)					
	2	4	6	8	10	12
10	6	12	16	20	24	30
30	10	18	25	32	40	46
60	13	22	32	41	51	58
125	17	30	44	55	68	80
300	25	46	64	83	203	122
600	37	68	95	124	154	182

d) Pitch discharge piping down a minimum of 3 inches (76 mm) per 100 feet (30.5 m) to the collection tank. This applies where a condensate pump set or reliance upon a gravity return is used. An exception to this "rule-of-thumb" exists when there is sufficient pressure in a steam line to overcome its friction and static head, whether the line is level, or pitched up. Trap discharge line shall not be RTRP pipe nor shall the trap discharge connect to an RTRP pipe by direction connection. Install pipe through a condensate cooling device as depicted in Figure 10. This system provides a cooling tank and diffuser, plus a temperature relief valve to limit the temperature of condensate returned to a pumped RTRP condensate line to less than 250 degrees F (121 degrees C).

e) If it is not justifiable to return drips to a condensate system, they may be drained as waste to a sewer. If the temperature exceeds sewer limitations, condensate must be cooled in a sump or by other means. Disposal of condensate from steam systems along the waterfront or under piers warrants special consideration to be determined on a case-by-case basis.

4.2.7 Pipe Anchors. Ensure anchors comply with the following criteria:

4.2.7.1 Location. Locate anchors for non-pre-engineered/prefabricated systems at takeoffs from mains and other necessary points to contain pipeline expansion. If possible, locate anchors in buildings, piers, tunnels, and manholes with suitable access.

Downloaded from http://www.everyspec.com

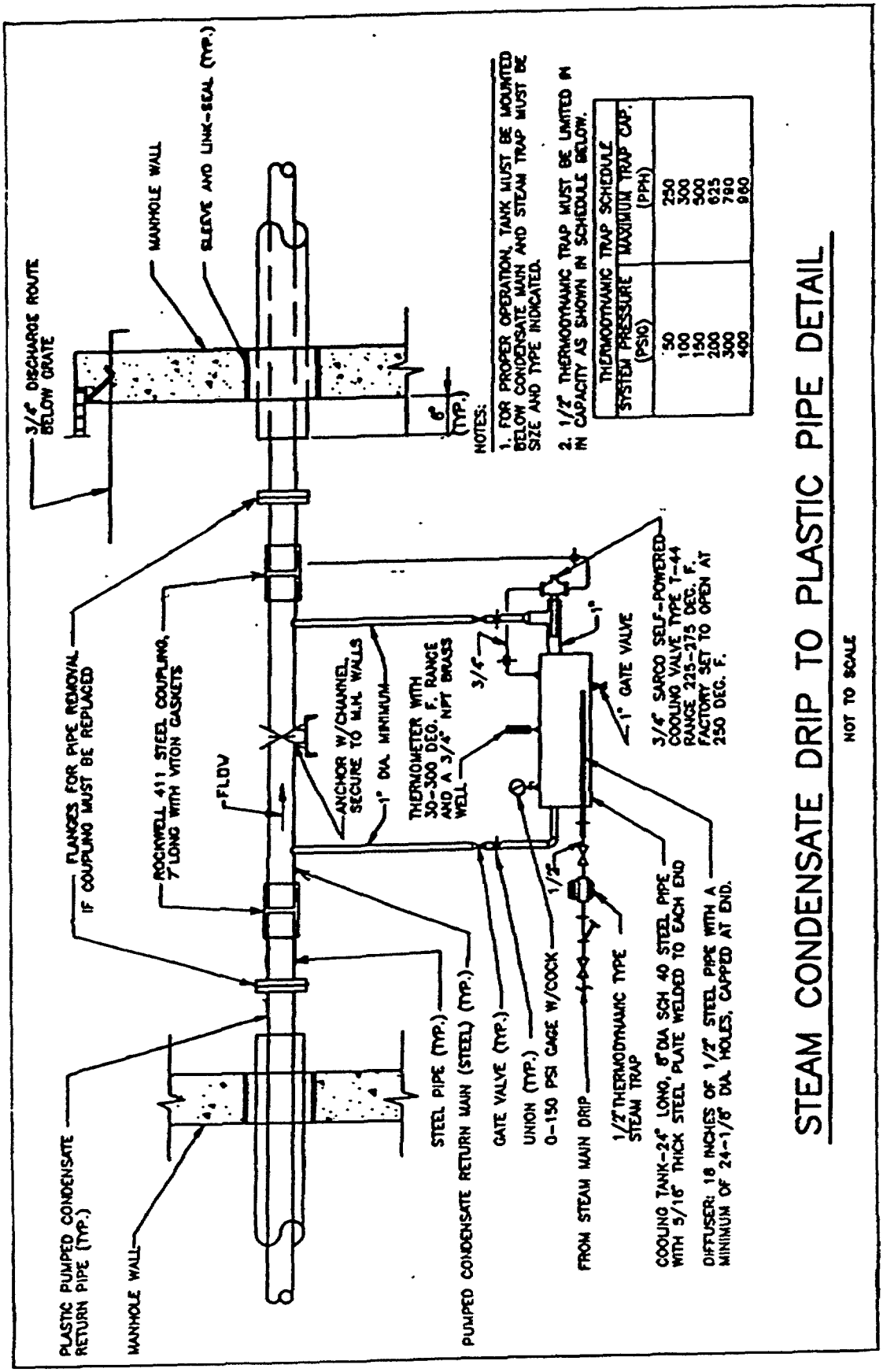

Figure 10
Protective Arrangement for RTRP Pipe

Downloaded from http://www.everyspec.com

4.2.7.2 Specification. Design and locate anchors in accordance with ASME B31.1.

4.2.7.3 Strength. Design anchors to withstand expansion reactions. With expansion joints, consider the additional end reactions due to internal fluid pressure, and add end reactions due to spring rate of the joint.

4.2.7.4 Guying. Anchors for elevated aboveground systems shall consist of wire rope guys running from embedded concrete deadmen to pipe saddles welded to the pipe and secured to the vertical support(s). Guy in both directions. Guys may be located on the diagonal to serve also as sway bracing.

4.2.7.5 Embedding. In underground concrete tunnels, the ends of structural steel shapes anchoring a pipe may be embedded in the tunnel walls or floors.

4.2.8 Supports. Insure pipe supports conform to ASME B31.1.

4.2.8.1 Low Elevations. For aboveground systems at low elevations (defined as lower than 5 feet (1.53 m) above grade or the working surface), use and space concrete pedestals, steel frames, or treated wood frames as required depending on pipe sizes.

4.2.8.2 High Elevations. At higher elevations above ground, support pipelines on wood, steel pipe, H-section steel, reinforced concrete, prestressed concrete poles with crossarms, or steel frameworks fitted with rollers and insulation saddles. (See Figure 11.) Details of design will vary depending on site conditions.

4.2.8.3 Long Spans. When long spans are necessary, cable-suspension or catenary systems may be used.

4.2.8.4 Underground Conduits. Use approved types of manufacturers' standard designs supports for underground conduits.

4.2.8.5 In Trench. Suspend pipes either from the walls or the tops of the walls. Do not support piping from either the floor of the trench or from the removable top. The pipe hanger design must provide for adequate system expansion and contraction.

Downloaded from http://www.everyspec.com

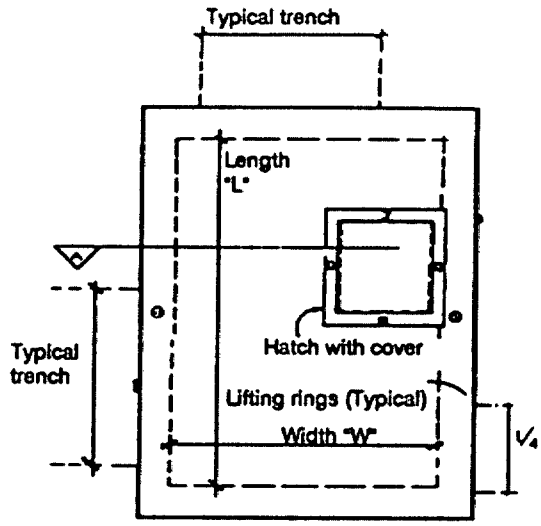

TYPICAL STANDARD VALVE MANHOLE COVER

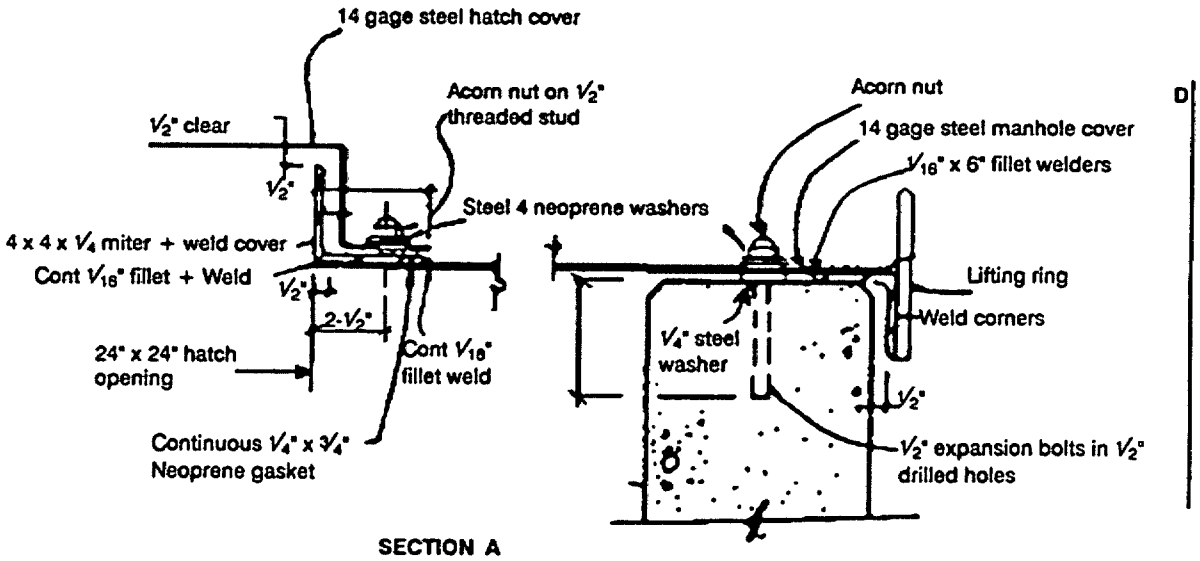

SECTION A

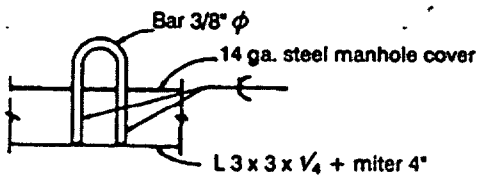

SECTION D

TYPICAL LIFTING RING

Figure 23
Concrete Shallow Trench Heat Distribution System
Detail 12

Downloaded from http://www.everyspec.com

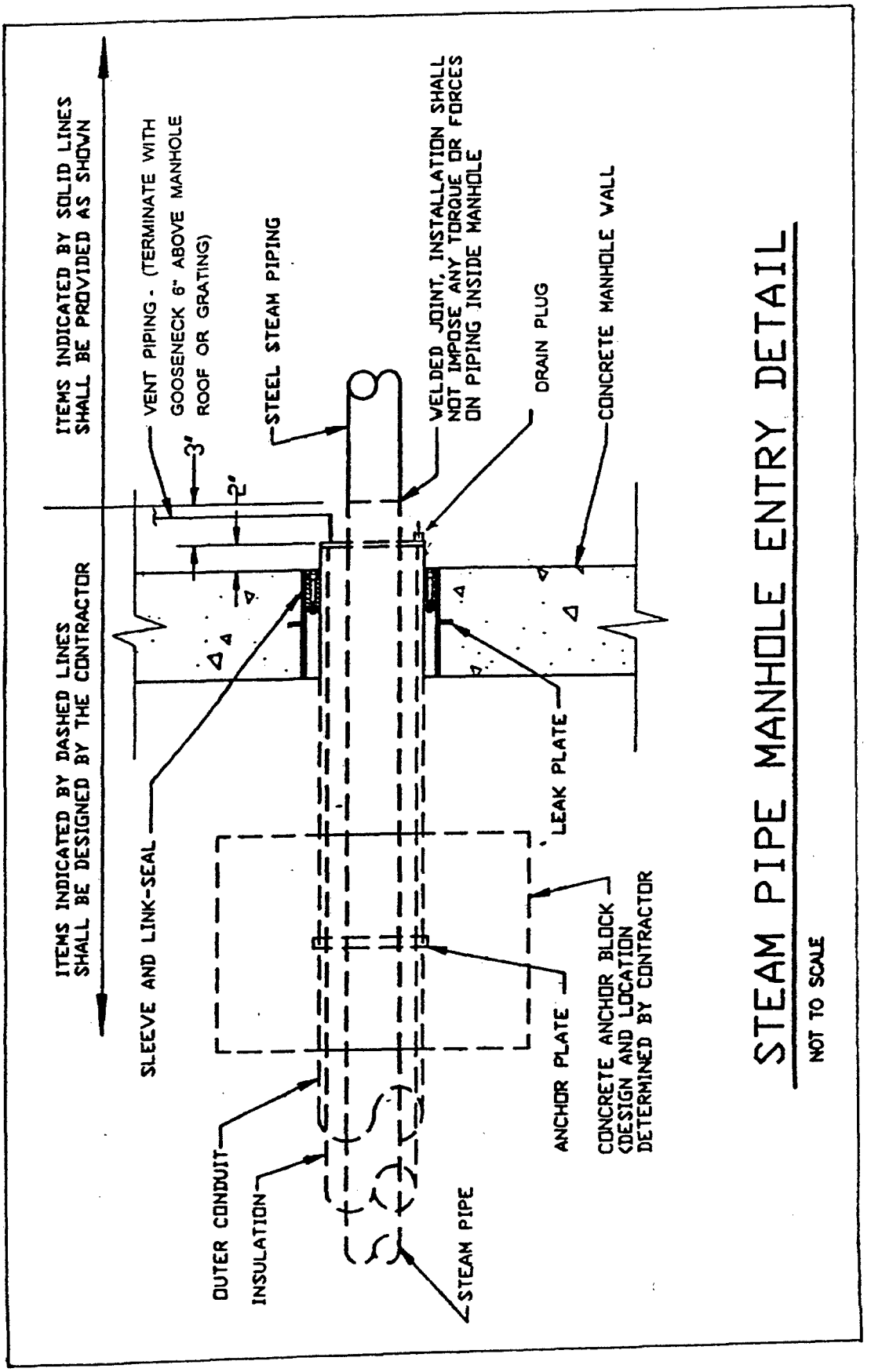

Figure 24
Steel Carrier Piping Manhole Entry Detail
(no scale)

Downloaded from http://www.everyspec.com

APPENDIX A (continued)

Location	Winter	Spring	Summer	Autumn	Annual
Hawaii					
Hilo AP	72	72	74	74	73
Honolulu AP	74	75	77	77	76
Honolulu CO	74	74	77	76	75
Lihue AP	72	73	76	75	74
Alaska					
Anchorage PA	25	29	46	42	35
Annette AP	40	42	51	49	46
Barrow AP	4	7	16	14	10
Bethel AP	18	23	41	37	30
Cold Bay AP	33	35	43	41	38
Cordova AP	32	35	45	43	39
Fairbanks AP	14	19	38	34	26
Galena AP	13	18	37	33	25
Gambell AP	15	19	34	30	24
Juneau AP	34	36	47	45	41
Juneau CO	36	39	49	46	42
King Salmon AP	25	28	44	40	34
Kotzebue AP	10	14	31	27	21
McGrath AP	14	18	37	33	25
Nome AP	16	20	37	33	26
Northway AP	12	16	32	29	22
Saint Paul Island AP	31	32	40	38	35
Yakutat AP	33	36	45	43	39
West Indies					
Ponce Santa Isabel AP	75	76	78	78	77
San Juan AP	77	77	79	79	78
San Juan CO	77	77	79	79	78
Swan Island	80	80	82	81	81
Virgin Islands					
St. Croix, V.I. AP	78	78	81	80	79
Pacific Islands					
Canton Island AP	83	84	84	84	84
Koror	81	81	81	81	81
Ponape Island AP	81	81	81	81	81
Truk Moen Island	81	81	81	81	81
Wake Island AP	79	79	81	81	80
Yap	81	81	82	82	82

Downloaded from http://www.everyspec.com

REFERENCES

NOTE: THE FOLLOWING REFERENCED DOCUMENTS FORM A PART OF THIS HANDBOOK TO THE EXTENT SPECIFIED HEREIN. USERS OF THIS HANDBOOK SHOULD REFER TO THE LATEST REVISIONS OF CITED DOCUMENTS UNLESS OTHERWISE DIRECTED.

FEDERAL/MILITARY SPECIFICATIONS, STANDARDS, BULLETINS, HANDBOOKS, AND NAVFAC GUIDE SPECIFICATIONS:

Unless otherwise indicated, copies are available from Standardization Documents Order Desk, Building 4 D, 700 Robbins Avenue, Philadelphia, PA 19111-5094.

SPECIFICATIONS

MILITARY

MIL-P-28584A	Pipe and Pipe Fittings, Glass Fiber Reinforced Plastic for Condensate Return Lines

HANDBOOKS

MIL-HDBK-1002/2	Loads
MIL-HDBK-1003/6	Central Heating Plants
MIL-HDBK-1025/2	Dockside Utilities for Ships Service

NAVFAC GUIDE SPECIFICATIONS

NFGS-02685	Exterior Fuel Distribution System
NFGS-02685	Gas Distribution System
NFGS-02693	Exterior Shallow Trench Heat Distribution System
NFGS-02694	Exterior Underground Heat Distribution System
NFGS-02695	Exterior Aboveground Steam Distribution System
NFGS-02696	Exterior Piping Insulation
NFGS-02697	Exterior Buried Pumped Condensate Return System
NFGS-02698	Exterior Buried Preinsulated Water Piping

Downloaded from http://www.everyspec.com

NFGS-09809	Protection of Buried Steel Piping and Steel Bulkhead Tie Rods
NFGS-15250	Insulation of Mechanical Systems

NAVY MANUALS, DRAWINGS, P-PUBLICATIONS, AND MAINTENANCE OPERATING MANUALS: Available from Commanding Officer, Naval Publications and Forms Center (NPFC), 5801 Tabor Avenue, Philadelphia, PA 19120-5099. To order these documents: government agencies must use the Military Standard Requisitioning and Issue Procedure (MILSTRIP); the private sector must write to NPFC, ATTENTION: Cash Sales, Code 1051, 5801 Tabor Avenue, Philadelphia, PA 19120-5099.

DESIGN MANUALS

DM-1.01	Basic Architectural Requirements
DM-3.01	Plumbing Systems
DM-3.03	Heating, Ventilating, Air Conditioning and Dehumidifying Systems
DM-3.5	Compressed Air and Vacuum Systems
DM-3.6	Central Heating Systems (See MIL-HDBK-1003/6 Reference)
DM-7.01	Soil Mechanics
P-272 (Part I)	Definitive Designs for Naval Shore Facilities
P-442	Economic Analysis Handbook

OTHER GOVERNMENT DOCUMENTS AND PUBLICATIONS:

NATIONAL INSTITUTE OF SCIENCE AND TECHNOLOGY (NIST)

NBS Handbook 135	Life-Cycle Cost Manual for the Federal Energy Management Program

Unless otherwise indicated, copies are available from National Technical Information Service (NTIS), Springfield, VA 22161.

NAVAL CIVIL ENGINEERING LABORATORY

NCEL UG-0005	Steam Trap Users Guide

Available from Commanding Officer, Code L08B, Naval Civil Engineering Laboratory, Port Hueneme, CA 93043-5003.

Downloaded from http://www.everyspec.com

NON-GOVERNMENT PUBLICATIONS:

Crocker and King, Piping Handbook, 5th Edition, available from McGraw-Hill Book Company, Inc., New York, NY 10036.

Keenan, Keyes, Hill and Moore, Thermodynamic Properties of Steam, available from J. Wiley & Sons, NY, Copyright 1969, Library of Congress Catalog, Card No. 68-54568.

AMERICAN SOCIETY OF MECHANICAL ENGINEERS (ASME)

ASME B31.1	Power Piping (ANSI/ASME)
ASME B31.8	Gas Transmission and Distribution Piping Systems (ASME/ANSI)

Unless otherwise indicated, copies are available from American Society of Mechanical Engineers, 345 East 47th Street, New York, NY 10007.

AMERICAN SOCIETY OF HEATING, REFRIGERATING, AND AIR CONDITIONING ENGINEERS (ASHRAE)

ASHRAE	Handbook - Fundamentals
ASHRAE	Handbook - Systems
ASHRAE	Handbook - Applications
ASHRAE Transactions Volume 71, Part 1, p. 61, 1965)	Earth Temperature and Thermal Diffusivity at Selected Stations in the United States

Unless otherwise indicated, copies are available from American Society of Heating, Refrigerating, and Air Conditioning Engineers, Inc., 1791 Tullie Circle, N.E., Atlanta, GA 30329.

HYDRAULIC INSTITUTE (HI)

Pipe Friction Handbook

Unless otherwise indicated, copies are available from Hydraulic Institute, 712 Lakewood Center North, 14600 Detroit Avenue, Cleveland, OH 44107.

NATIONAL FIRE PROTECTION ASSOCIATION (NFPA)

NFPA 54	National Fuel Gas Code

Unless otherwise indicated, copies are available from National Fire Protection Association, Batterymarch Park, Quincy, MA 02269.

Downloaded from http://www.everyspec.com

CUSTODIAN:
NAVY - YD

PREPARING ACTIVITY
NAVY - YD

PROJECT NO.
FACR - 0490

*U.S. GOVERNMENT PRINTING OFFICE: 1990--704-034/30889