Downloaded from http://www.everyspec.com

MIL-HDBK-770A
13 SEPT 1985

SUPERSEDING
MIL-HDBK-770
1 MAY 1976

Military Standardization Handbook
Shrink Film/Stretch Film
in
Military Packaging

AREA PACK

NO DELIVERABLE DATA REQUIRED BY THIS DOCUMENT
DISTRIBUTION STATEMENT A. APPROVED FOR PUBLIC RELEASE; DISTRIBUTION IS UNLIMITED

Downloaded from http://www.everyspec.com

DEPARTMENT OF DEFENSE

WASHINGTON, DC 20301

Shrink Film/Stretch Film in Military Packaging

MIL-HDBK-770

1. This standardization handbook was developed for use by DOD activities having applications for shrink film and/or stretch film in packaging for shipment or storage.

2. This publication was approved on 13 September 1985 for printing and inclusion in the military standardization handbook series.

3. This two-part document provides basic and fundamental information on the use of shrink-film/stretch-film packaging applications and equipment. It provides basic information to personnel engaged in developing packaging directives as well as to personnel involved in actual packaging of materiel for storage and distribution. This handbook is not intended to be referenced in purchase specifications except for informational purposes, nor shall it supersede any specification requirements.

4. Every effort was made to reflect the most current information on shrink-film/stretch-film equipment and packaging applications. It is intended that this handbook will be reviewed periodically to insure its completeness and currency. Users of this handbook are encouraged to report any errors discovered and any recommendations for changes or inclusions to Director, AMC Packaging, Storage, and Containerization Center, ATTN: SDSTO-TP, Tobyhanna, PA 18466-5097.

Downloaded from http://www.everyspec.com

FOREWORD

Military packaging has experienced significant changes in the recent past due to a variety of factors Including the Increasing costs of traditional packaging materials, environmental and energy considerations, containerization, and advent of direct delivery to overseas customers. These changes have dictated that new methods and techniques be explored as possible replacements for traditional packaging practices.

A major Innovation which has evolved as a result of these changes is the use of plastic film in the formation of packages and load units which conform to military requirements. The use of shrink film/stretch film has resulted In diminished packaging costs, greater efficiency in packaging operations, and a significant reduction in the amount of solid waste created through use of packaging materials. The use of shrink film/stretch film is also compatible with the Increasing trend toward automation of packaging operations as a means of reducing labor costs and expediting production.

Use of proprietary or trade names in describing materials or methods covered herein does not constitute an endorsement by the US Government of any product, method, or process.

Downloaded from http://www.everyspec.com

CONTENTS
Part I (Shrink Film)

		Page
	PROMULGATION SHEET	ii
	FOREWORD	iii
1.	SCOPE	1
1.1	Scope	1
1.2	Applicability	1
2.	REFERENCED DOCUMENTS	1
2.1	Government documents	1
2.1.1	Specifications, standards, and handbooks	1
2.2	Other publications	2
2.3	Order of precedence	2
3.	GENERAL REQUIREMENTS	3
3.1	Prior preparation	3
3.2	Exclusions	3
4.	DETAILED REQUIREMENTS	3
4.1	Films	3
4.1.1	Production of films	3
4.1.2	Limitations	4
4.1.3	Films specified	4
4.1.4	PE bags	4
4.1.5	Rolled PE film	5
4.1.6	UVI film	5
4.1.7	Copolymer-modified PE film	5
4.1.8	Nonadhering PE film	6
4.1.9	Low-slip PE film	6
4.1.10	Recycling and disposability of PE film	6
4.2	Associated materials	7
4.2.1	Pallets	7
4.2.2	Prepacking trays	8
4.3	Shrink-film packaging equipment and processes	8
4.3.1	Shrink chamber	8
4.3.2	Shrink tunnel	9
4.3.3	Heat collar	10
4.3.4	Bell oven	10
4.3.5	Heat cannon	11
4.3.6	Large sleeve wrapper	12
4.3.7	Bag dispensing equipment	13
4.3.8	Pallet load bonding	14
4.3.9	Multipacking	15
4.3.10	Tire unitization	16
4.3.10.1	Alternate method of unitizing	16
4.3.10.2	Nonavailability of shrink-film capability	18
4.4	Small parcel shrink-film system	18
4.4.1	Small parcel packing	19
4.4.2	Shrink-film exterior container	22
4.4.3	Shrink-film Internal bracing	23
4.4.4	Commercial packaging applications	24

Downloaded from http://www.everyspec.com

CONTENTS
Part II (Stretch Film)

		Page
1.	SCOPE	26
1.1	Scope	26
1.2	Applicability	26
2.	REFERENCED DOCUMENTS	26
2.1	Government documents	26
2.1.1	Specifications, standards, and handbooks	26
2.2	Other publications	27
2.3	Order of precedence	27
3.	GENERAL REQUIREMENTS	27
3.1	Prior preparation	27
3.2	Exclusions	27
4.	DETAILED REQUIREMENTS	27
4.1	Film materials	27
4.1.1	Production of film	28
4.1.1.1	Film properties	28
4.1.1.2	Selecting the proper film	29
4.1.2	Stretch-film wrapping advantages/ disadvantages	29
4.2	Methods of stretch-wrapping	29
4.2.1	Full web	30
4.2.2	Multiple band	30
4.2.3	Spiral	30
4.3	Stretch-film equipment and processes	31
4.3.1	Stretch bundling	31
4.3.2	Hand-held units	33
4.3.3	Rotary stretch-wrap equipment	33
4.3.3.1	Rotary full web	34
4.3.3.2	Rotary convolute	34
4.3.4	Pass-thru system	35
4.3.4.1	Prestretch	36
4.3.4.2	Stretch netting	37
4.3.5	Tire unitization	37
4.3.5.1	Stretch-wrapping of tires	38
4.3.6	Stretch-wrapping of palletized loads	38

Downloaded from http://www.everyspec.com

APPENDIX

Page

Appendix A. Acronym and definition list ---------- 40

TABLES

1. PE bags ---------- 5

II. Limited guide to applications of shrink-film methods by shipment destination and mode of transportation ---------- 25

Downloaded from http://www.everyspec.com

FIGURES
Part I (Shrink Film)

FIGURE		Page
1	Expendable-type pallet ("Buckboard" (TM) type) and locally fabricated stand for expendable "Buckboard" pallet	7
2	Typical installation of a shrink-film chamber with power-assisted dolly and conveyor	8
3	In-line installation of a shrink-film heat tunnel coupled with a power conveyor	9
4	Typical shrink-collar/ring	10
5	Type of bell oven currently in use	11
6	Hand-held portable heat cannon (gas fired and electrically heated)	12
7	Power-assisted PE bag dispenser	13
8	Application of shrink-film PE bag for bonding a pallet load	14
9	Pallet load exiting heat source following shrinking	15
10	Shrink-film multipack utilizing a lightweight expendable pallet	16
11	Shrink-film unitization of tires	17
12	Typical installation of a small parcel sleeve wrapper and heat tunnel	19
13	Multiple small items assembled on fiberboard tray entering a small parcel sleeve wrapper	20
14	Small parcel pack after exiting the small parcel shrink tunnel: ready for mailing	21
15	Preparation of unit packs for application of a shrink-film exterior container	22
16	Steps used in shrink-film Internal bracing (Immobilization)	24

Downloaded from http://www.everyspec.com

FIGURES
Part II (Stretch Film)

FIGURE		Page
17	Full-web method of stretch-wrapping --------	30
18	Multiple band method of stretch-wrapping ----	30
19	Spiral method of stretch-wrapping ----------	30
20	Planetary wrapper ----------	31
21	Ring or orbital wrapper ----------	32
22	Manual hand-held wrapper ----------	33
23	Rotary full-web wrapper ----------	34
24	Pass-thru system ----------	35
25	Conventional stretch ----------	36
26	Prestretch method ----------	37
27	Stretch-wrap bonding of tires ----------	38
28	Stretch-wrap bonding of palletized loads ----	39

Downloaded from http://www.everyspec.com

1. SCOPE

1.1 Scope. Part I of this handbook provides basic and fundamental information on the use of heat-shrinkable PE film in military packaging applications including equipment and materials employed. in the formation of shrink-film packages and load units.

1.2 Applicability. The methods described are applicable to and authorized for use by all activities engaged in the packaging of military materiel except as specified in subsequent sections of this publication. Application of the methods described is not intended as mandatory for use in place of separate specific containers or packaging-methods required for use with certain categories of commodities or types of Items.

2. REFERENCED DOCUMENTS

2.1 Government documents.

2.1.1 Specifications, standards, and handbooks. Unless otherwise specified, the following specifications, standards, and handbooks of the issue listed in that issue of the DODISS specified in the solicitation form a part of this standard to the extent specified herein.

SPECIFICATIONS

FEDERAL

L-P-378	Plastic Sheet and Strip, Thin Gauge, Polyolefin
NN-P-71	Pallet, Material Handling, Wood, Stringer Construction, 2 Way and 4 Way (Partial)
PPP-B-636	Box, Shipping, Fiberboard
PPP-B-640	Box, Fiberboard, Corrugated, Triple-wall
PPP-E-540	Envelope, Water Resistant, for Packing Lists and Shipping Documents
PPP-F-320	Fiberboard, Corrugated and Solid, Sheet Stock (Container Grade), and Cut Shapes
PPP-T-60	Tape, Packaging, Waterproof
PPP-T-70	Tape, Packaging, Plastic Film

Downloaded from http://www.everyspec.com

MILITARY

MIL-T-4	Tire, Pneumatic, and Inner Tube, Pneumatic Tire, Tire With Flap, Packaging and Packing of
MIL-P-116	Preservation, Methods of
MIL-P-15011	Pallet, Material Handling, Wood, Post Construction, 4 Way Entry

STANDARDS

MILITARY

MIL-STD-129	Marking for Shipment and Storage
MIL-STD-147	Palletized Unit Loads

HANDBOOK

MILITARY

MIL-HDBK-742	Waste Disposal Methods for Military Packaging Materials

2.2 Other publications. The following documents form a part of this handbook to the extent specified herein. Unless otherwise specified, the issues of the documents which are DOD adopted shall be those listed in the issue of the DODISS specified in the solicitation. The issues of documents which were not adopted shall be those in effect on the date of the cited DODISS.

Occupational Safety and Health Standards of the Occupational Safety and Health Administration, Department of Labor.

(Application for copies should be addressed to Occupational Safety and Health Administration, US Department of Labor Building, 14th Street and Constitution Avenue, NW, Washington, DC 20210.)

American Society for Testing and Materials, ASTM D3951, Standard Practice for Commercial Packaging.

(Application for copies should be addressed to American Society for Testing and Materials, 1916 Race Street, Philadelphia, PA 19103.)

2.3 Order of precedence. In the event of a conflict between the text of this handbook and the references cited herein, the text of this handbook shall take precedence.

Downloaded from http://www.everyspec.com

3* GENERAL REQUIREMENTS

3.1 Prior preparation. Prior to execution of the requirements of shrink-film packaging applications described, the items shall be prepared in accordance with MIL-P-116, as appropriate, and packed In exterior containers suitable for the commodity and Its redistribution after removal from the unit load.

3.2 Exclusions. Few products need to be eliminated from consideration for shrink processes, even though they may be exposed to 500° F. or higher, during the shrink process. Tests have shown that the temperature under the shrink film normally rises only a few degrees above the room or area temperature In which the packaging takes place. Products that are excluded from the shrink methods and procedures described because of their extreme heat sensitivity are ammunition, nuclear explosives, POL, and other flammable materials.

4. DETAILED REQUIREMENTS

4.1 Films. The film preferred for shrink-film packaging is heat-shrinkable PE, a type of thin gauge polyolefin. PE is favored over other type heat-shrinkable films such as PVC for military packaging applications because of its greater yield per foot, nontoxicity, and ease of disposal. PE shrink film is also highly recyclable increasing its attractiveness in light of requirements for environmentally safe packaging materials.

4.1.1 Production of films. Formation of heat-shrinkable films is by the process of blowing extrusion. During the manufacturing process, certain stresses are placed upon the film as a result of stretching in either one or two directions. The film is heated and these stretch characteristics are "frozen" into it as it cools l Film which is stretched both in the direction of the forming machine (MD) by the pulling effect, and in the crosswise or (TD) by increasing the diameter of sleeve-formed (tubular) films is known as biaxially oriented film. Film stretched in only one direction, that of the forming machine (MD), is referred to as preferentially oriented. The orientation is the direction in which it will contract (shrink). When the film is exposed to sufficient heat, approximately 325° F. (heat requirements will vary based upon film thickness and dwell time), the stretched characteristics frozen into the film during the manufacture are released and the film returns to Its original size (shrinks) forming a tight bond around an item, package, or load unit. This property of being capable of regaining its original characteristics is commonly referred to as "memory." The amount of contractibility of which the film is capable depends upon the degree of stress placed upon the film during manufacture, temperatures attained during formation, and other factors. These variations allow for production of films to satisfy a wide range of requirements.

Downloaded from http://www.everyspec.com

4.1.2 Limitations. Some characteristics of heat-shrinkable films which can Influence their applications were identified. Users should recognize these characteristics and respect the limitations they may Impose. Condensation was noted to form on the underside of the film on shrink-film packs due to the film's resistance to moisture and air. This condition occurs primarily in instances wherein s~rink-film packs are stored for extended periods in areas which experience marked differences in temperature between day and night or where other significant temperature fluctuations occur. Since the use of shrink film by the military is not ordinarily regarded as a method of packaging protection, as defined by MIL-P-116, but usually a method of bonding intended to get. the materiel from shipper to customer; condensation does not present any serious problem, although some Instances of deterioration of fiberboard containers and surface corrosion of interior metal cans may result when loads are stored for extended periods of time In nontemperature-controlled areas. It should also be noted that most films will adhere to other plastics when heated to the temperature required to Initiate the shrinking process. However, any problems caused by film adherence can be eliminated through use of a nonadhering film such as that described in 4.1.8.

4.1.3 Films specified. Films specified for use In military packaging applications shall conform to the requirements of L-P-378. PE bags utilized In pallet load bonding and rolled film for use in the small parcel shrink-film system were assigned NSNs and are available from GSA. Films other than those covered by L-P-378 may also be used depending on applications, cost considerations, and availability.

4.1.4 PE bags. PE shrink-film bags for use in pallet load bonding and multipacking shall conform to type IV, class 3, grade A, finish 1, of L-P-378. Bags are supplied In perforated roll form under the NSNs shown In table 1. Determination of required bag sizes shall be by measuring the load in directions of length, width, and height. The appropriate size bag may then be selected from table 1.

Bags, preformed, PE, shrink film, transparent, gussetted, biaxially oriented approximately 45 percent In the TD and approximately 30 percent in the MD.

Downloaded from http://www.everyspec.com

TABLE 1. PE bags

NSN	Thickness	Bags per roll	Fits load size
8105-00-025-1263	8 mil	32	40" X 48" X 54"
8105-00-191-3701	6 mil	32	40" X 48" X 54"
8105-00-191-3776	6 mil	32	40" X 48" X 43"
8105-00-191-3902	8 mil	32	40" X 48" X 43"

Note. Bags of 6-mil thickness will be used for loads weighing up to 2,000 pounds. Bags of 8-mil thickness will be used for loads weighing between 2,000 and 3,000 pounds.

4.1.5 Rolled PE film. PE film for use with small parcel shrink-film systems will conform to type IV, class 4, grade A, finish 1, of L-P-378. This film Is colorless, completely transparent, and supplied In rolls 22 inches wide with a maximum outside roll diameter of 12 Inches and a core diameter of 3 inches. The prescribed thickness of this film for use with small parcel systems is 5 mil for normal small parcel packing. (Extra-strength film of 3-mil thickness may also be used (4.1.7)). When the small parcel system is utilized for application of shrink exterior containers, film thickness shall be 5 mil for weights up to 100 pounds and 7 mil for weights from 100 to 150 pounds. Film of 5-mil thickness may be obtained from GSA by requisitioning NSN 8135-00-355-7164.

4.1.6 UVI film. UVI film of 6-mil PE conforming to type V, of L-P-378, may be utilized for the unitization of tires by the shrink-film process In instances when true level A conditions are expected to be encountered. Film of this type Is impregnated with an ultraviolet stabilizer during manufacture which gives the film the ability to provide protection to tires from the effects of direct sunlight and ozone. The UVIs may vary the film's color from colorless to a transparent green although color alone does not indicate the presence of UVIs. UVI films may be obtained from numerous manufacturers.

4.1.7 Copolymer-modified PE film. Also known as “extra-strength” or "super-tough" film, copolymer-modified film is produced similarly to conventional PE shrink film but with an additional strength-giving polymer added during manufacture. Copolymer-modified film may be used as a replacement in reduced thickness for conventional PE films of greater thickness. Copolymer-modified film of 3-mil thickness may be used as a replacement

Downloaded from http://www.everyspec.com

for 5-mil conventional film used with the small parcel shrink-film system. This extra-strength film also provides additional stabilization to items secured using the shrink internal bracing technique described in 4.4.3.

4.1.8 Nonadhering PE film. A disadvantage to conventional PE shrink film is, in fact, that the film will adhere to other plastics when heated to the degree necessary to initiate the shrinking process. This characteristic precludes packaging with shrink-film items constructed of plastic or items which are individually plastic wrapped. . A solution to this problem lies In the use of nonadhering films such as PB laminate for packing such Items. This film is a coextrusion of PB and LDPE. When used with the PB side down, this film will not adhere to other plastics during the shrinking process.

4.1.9 Low-slip PE film. Low-slip PE film is another specially treated film which can be used In instances when it is necessary to package items with a shrink-film material which will not slip in contact with other plastic films. Considerations such as this are important when it is known or anticipated that plastic-wrapped items will be stacked to form a unit load (e.g., shrink-film exterior containers comprising a pallet load). Nonadhering PE film as well as copolymer-modified PE films are expected to be included in a future revision of L-P-378.

4.1.10 Recycling and disposability of PE film. Users of PE shrink film are encouraged to participate in the recycling programs which are established to benefit both the user and the extruding industry by providing a source of reusable material to industry and aiding in reducing material costs to users. The Defense Reutilization and Marketing Service of DLA is the DOD element which controls the actual program for recycling scrap PE film back to industry. Installations having shrink-film capability are encouraged to establish active programs for participation In the recycling efforts of DLA by designating collection points for accumulation of used film and arranging for its return to industry through DLA. By vigorously pursuing recycling efforts, It Is possible to help insure a continuing supply of new PE film and, to a certain extent, help to maintain costs at a moderate level. Additionally, when recycling programs are established, there is the added advantage of there being no need for disposal of the film by other less desirable means such as burning. The US Army Natick Research and Development Center, in its MIL-HDBK-742, ranks incineration or sanitary landfill as the preferred method of disposal for used PE film in instances when recycling is not feasible. When incineration is employed as the method of disposal, care should be taken to avoid inhalation of harmful gases which are produced during burning and may be health-hazardous when breathed for prolonged periods.

Downloaded from http://www.everyspec.com

4.2 Associated materials. The use of shrink film in military packaging applications has resulted in the requirement for certain associated materials to be specified for use in conjunction with these applications. Their use is intended to aid in the application of the shrink film or help provide a stable pack or load unit. Selection of associated materials (e.g., pallets, prepacking trays, etc.) naturally is linked closely with the particular application; however, within each application is considerable flexibility for selection of these materials. Reuse of materials is encouraged whenever the material retains its suitability for use.

4.2.1 Pallets. Although all military pallets are acceptable and authorized for use in forming pallet loads for shrink-film bonding due to their cost advantage, the standard 40- by 48-inch, 4-way entry wing-type pallets (type IV, size 2, NN-P-71, NSN 3990-00-935-7960) are preferred. Lightweight expendable-type pallets shall be used to the maximum extent practicable in lieu of heavier wood pallets when preparing shrink-film multipacks described in 4.3.9. Expendable pallets will be provided with the necessary pallet overlay board when materiel comprises a noninterlocking load on the pallet. Figure 1 illustrates an expendable-type pallet, although many different types are available from numerous manufacturers. Use of wing-type pallets are required for loads intended to be stowed directly into cargo holds of ships (i.e., not loaded in containers/vans) to facilitate attachment of bar or rope slings.

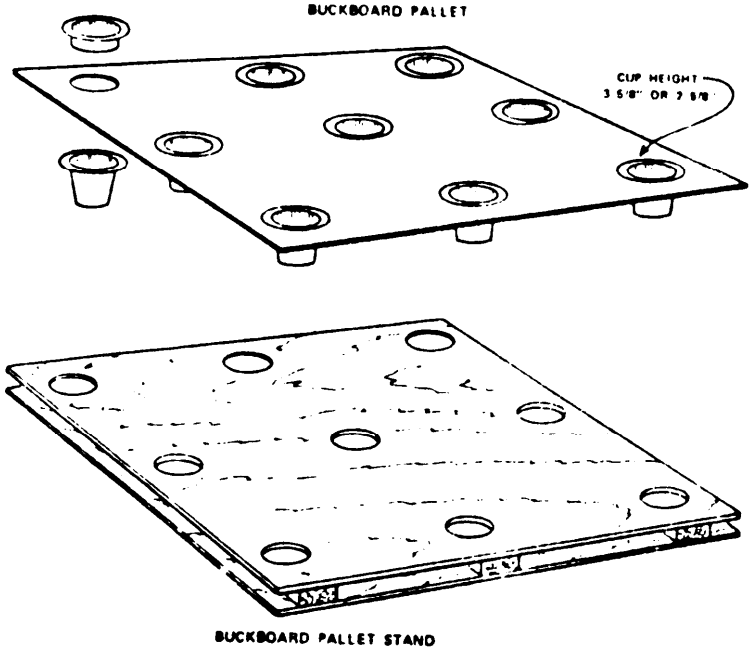

FIGURE 1. Expendable-type pallet ("Buckboard" (TM) type) and locally fabricated stand for expendable "Buckboard" pallet.

Downloaded from http://www.everyspec.com

4.2.2 Prepacking trays. Standard size prepacking trays shall be utilized when assembling Items for processing through the small parcel sleeve wrapper and heat tunnel. Locally fabricated fiber-board pads may be substituted.

4.3 Shrink-film packaging equipment and processes. Two basic types of shrink-film equipment are used in forming a shrink-film bonded load. The first type of equipment utilizes an oven (heat chamber or tunnel) and is referred to as the horizontal method. The second type of equipment (vertical method) utilizes a heat source contained in a ring, collar, or bell-shaped oven which is lowered around the load and withdrawn upward. The heat source for the two basic types of shrink-film equipment may be propane, natural gas, or electricity. Oven-type units are in widest use In military packaging applications although the vertical systems do offer certain advantages including lower initial cost and greater portability. Power-assisted, bag-dispensing equipment Is available as an aid in dispensing PE bags for pallet-load bonding and multipacking applications.

4.3.1 Shrink chamber. As noted in 4.3, the ovens employed by the horizontal method are of two types. The first type of oven (heat chamber) has one opening through which the load enters and exits, usually by means of a powered dolly which may be placed in line with a conveyor (fig 2). Due to Its construction, the chamber is

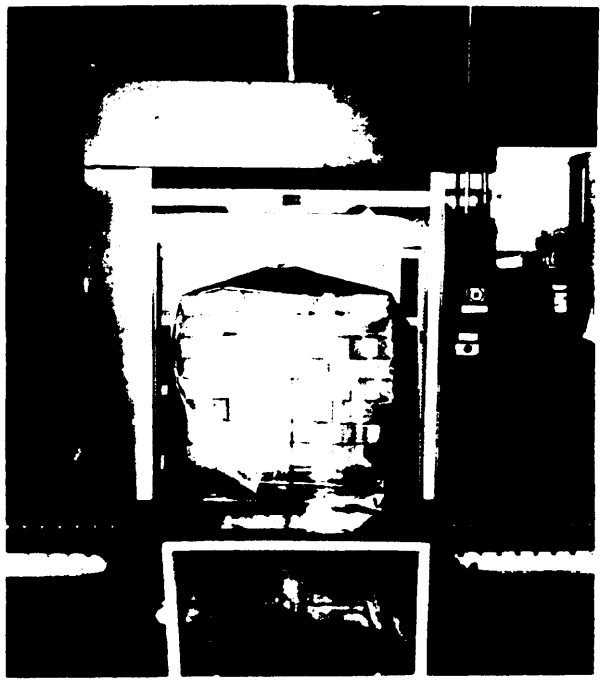

FIGURE 2. Typical installation of a shrink-film chamber with power-assisted dolly and conveyor.

Downloaded from http://www.everyspec.com

best suited to low- and medium-volume packaging operations. Most chambers have a maximum production capability of approximately 30 loads per hour and may be either electrically heated or gas fired . Chambers do not provide straight-through, in-line capability but are commonly placed in a location adjacent to the conveyor in such a manner as to provide ease of entry and exit of the load on the powered dolly.

4.3.2 Shrink tunnel. The second type of oven (shrink tunnel) has two openings and can be placed In line with a power conveyor system to allow for passage of loads directly through the tunnel In a straight-line flow. Figure 3 Illustrates a typical in-line Installation of a shrink-film heat tunnel coupled with a powered conveyor. Tunnels of this type are usually capable of a processing capacity of 50 or more loads per hour and an in-line placement and production capacity make the tunnel well suited to use in high-speed packaging operations. Like the heat chamber, heat tunnels may be either electrically heated or gas fired.

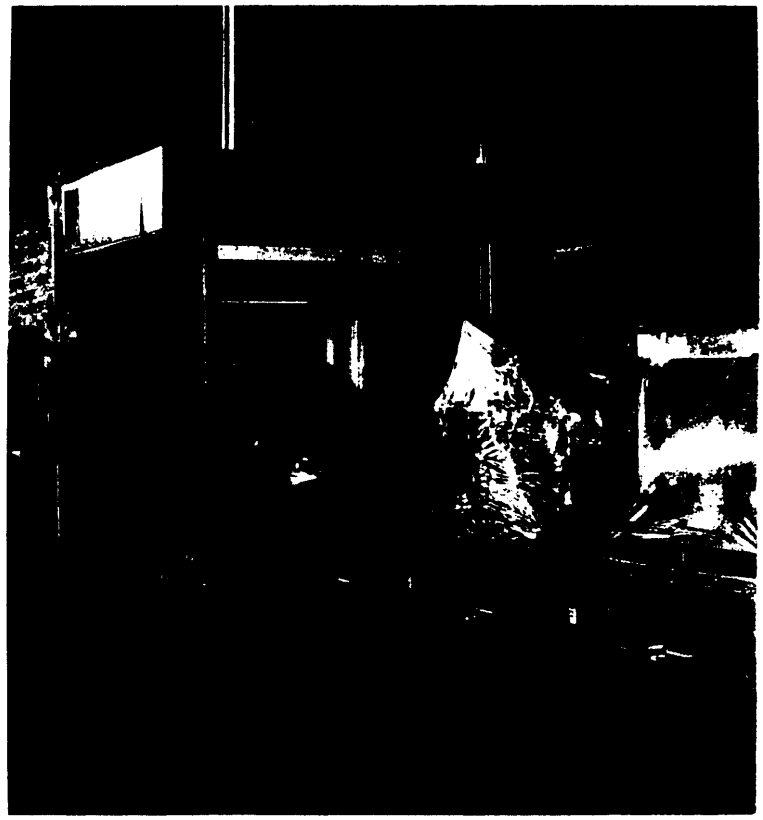

FIGURE 3. In-line installation of a shrink-film heat tunnel coupled with a power conveyor.

Downloaded from http://www.everyspec.com

4.3.3 Heat collar. The vertical method of shrink-film bonding utilizes a heat source contained either in a ring, collar, or bell-shaped oven mounted on a frame which Is lowered around the load . The heat collar Is lowered around the load unit and heat is applied to the shrink film as the collar is withdrawn upward. Heat collars are available In various sizes to accommodate loads of different dimensions. Use of a heat collar is recommended only when catalytic, rather than infrared, heat is used during the shrink process. The increased intensity of infrared heat results in increased levels of heat transfer during the shrink process and the Increased possibility of melting the film. A disadvantage of this type of equipment Is that the size of the load that can be produced Is limited by the diameter of the collar. Advantages include simplicity of design which makes this type of equipment relatively Inexpensive with ease of installation and portability. Figure 4 illustrates a typical shrink-collar/ring .

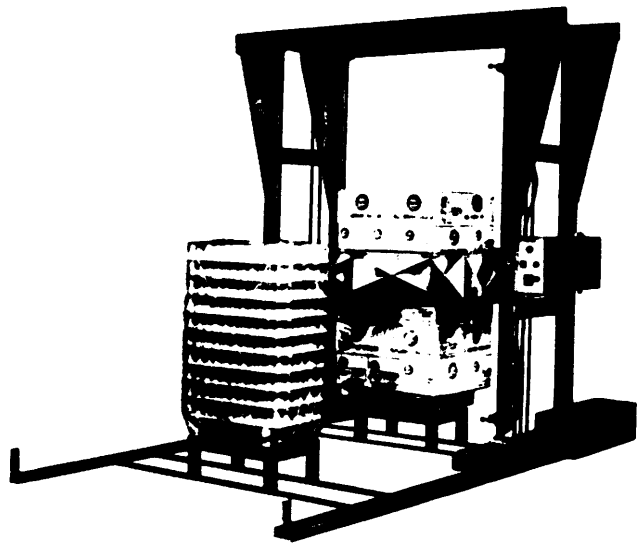

FIGURE 4. Typical shrink-collar/ring.

4.3.4 Bell oven. The second type of vertical equipment is the bell oven which consists of an oven mounted on a frame. The oven is lowered over the load and heated air is circulated around the shrink-film encapsulated load to Initiate shrinking. When the oven is withdrawn upward and the load removed, bonding is completed as the film cools. Like the heat collar, bell ovens offer a certain degree of portability, as compared to chambers and tunnels. Here again, however, the size of the load that can be

Downloaded from http://www.everyspec.com

produced is dependent on the diameter of the bell oven. Bell ovens are available from numerous manufacturers in a wide range of prices and generally are used for bonding pallet-size load units. Figure 5 illustrates a type of bell oven currently In use.

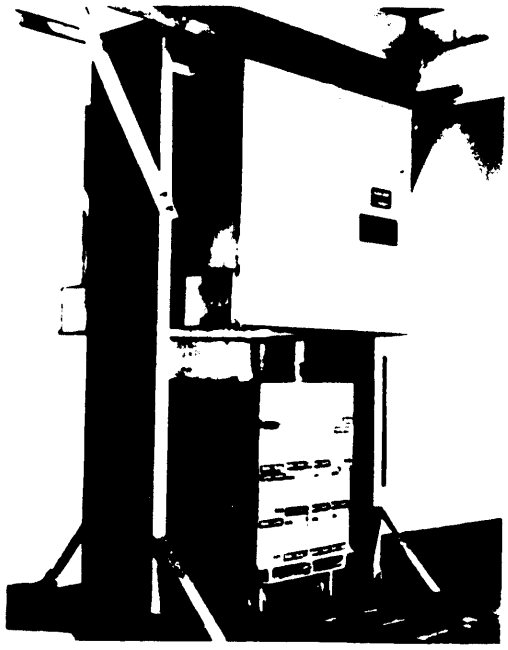

FIGURE 5. Type of bell oven currently in use.

4.3.5 Heat cannon. In addition to the heat collar and oven-type heat sources, a small, portable heat unit known as a heat cannon is also available (fig 6). This unit is a small, hand-held heat source comprising a heating unit and barrel through which heated air is directed at the shrink film. Heat cannons may be either gas fired or electrically heated. Gas-fired units normally operate on either acetylene or propane fuel through attached hoses from a pressurized bottle and require standard 115-VAC current for ignition. Electric models normally require either standard 115- or 220-VAC current for ignition. Use of the heat cannon requires a considerable degree of skill and its operation should be attempted only by trained personnel. The heat cannon is especially useful in patching or mending damaged film and is also an economical means of providing shrink-film capability to activities which do not require the production capacity of heat tunnels or chambers. The low cost and economy of operation of these units makes them especially attractive in limited production operations. A standard size pallet load can be shrunk in approximately 5-10 minutes, depending on operator skill, and the heat cannon can be used economically for production levels as low as 10 pallet loads per day.

Downloaded from http://www.everyspec.com

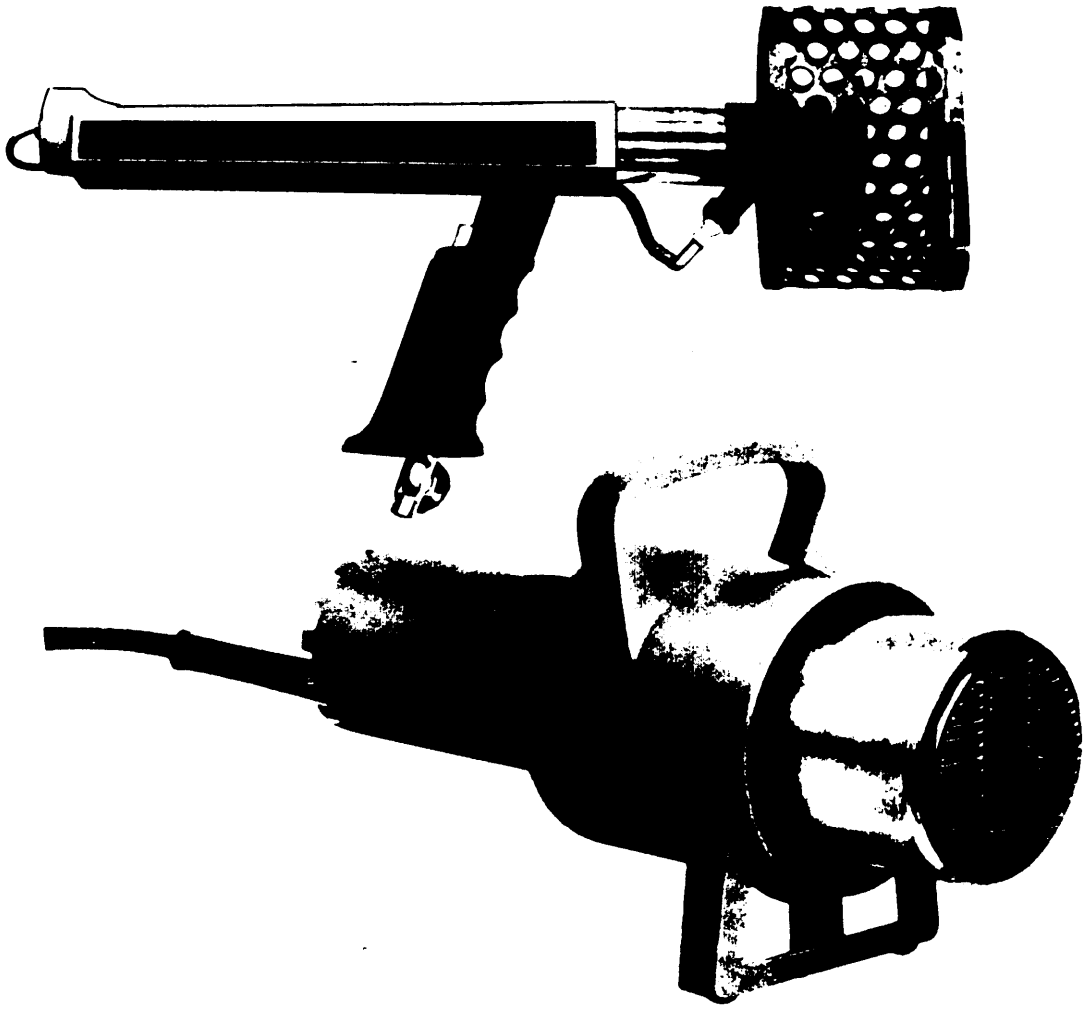

FIGURE 6. Hand-held portable heat cannon (gas fired (top) and electrically heated (below)).

4.3.6 Large sleeve wrapper. Large-size sleeve wrappers are available for use In applying rolled film to pallet loads, tires, and multipacks. The large-size sleeve wrapper is a larger version of the type used with the small parcel shrink-film system and is quite similar in operation. The large-size sleeve wrapper Is extremely beneficial for applying film because of Its ability to completely encapsulate a load. In addition, intermediate-size sleeve wrappers and heat tunnels are available which can be utilized in the formation of shrink film for exterior containers up to a size of 30 inches X 20 inches X 18 inches and weighing Up to 150 pounds.

Downloaded from http://www.everyspec.com

4.3.7 Bag dispensing equipment. Numerous types of power-assisted bag dispensers are available for use In applying PE bags to palletized load units. These devices are available in many forms and degrees of complexity in a wide range of prices. Bag dispensers are commonly positioned In close proximity to the heat source to provide for application of shrink-film bags without interruption of material flow. Most power-assisted bag dispensers are capable of bagging up to 60 loads per hour, although some models have production capacities in excess of 100 loads per hour. Power-assisted bag dispensers normally can be operated by one person with limited effort. Figure 7 Illustrates a power-assisted PE bag dispenser.

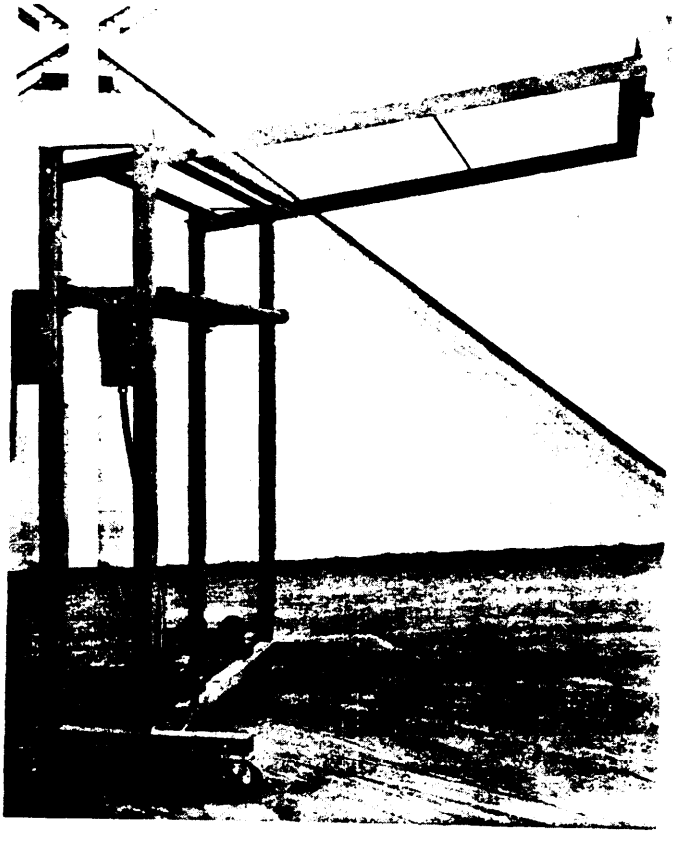

FIGURE 7. Power-assisted PE bag dispenser.

Downloaded from http://www.everyspec.com

4.3.8 Pallet load bonding. The use of PE shrink film for bonding pallet loads was adopted as one of the preferred methods of securing materiel on the pallet and has proven to be an effective replacement for metallic strapping. The shrink-film systems in widest military use for pallet load bonding utilize an in-line, gas-fired, shrink tunnel for application of the shrink film. These systems provide a fast, efficient, and economical means of bonding pallet loads in lieu of the use of metallic strapping. Additional advantages include allowing for Individual package removal, reducing pilferage, eliminating damage from straps, and protecting against dust and rain. The cost savings in labor and material, when pallet load bonding is used in lieu of metallic strapping, currently average around $2.50 per Pallet load. After a pallet load of materiel is assembled, a PE shrink-film bag is placed over the load by means of a power-assisted bag dispensing apparatus (fig 8).

FIGURE 8. Application of PE shrink-film bag for bonding a pallet load.

The pallet load is then moved into the heat source where hot air is circulated around the bag-encapsulated pallet load, causing the stress characteristics frozen into the film to be released and allowing the film to shrink around the load. Upon completion of the required exposure period, approximately 45 seconds, the load moves out of the heat source tunnel and cooling begins (fig 9).

Downloaded from http://www.everyspec.com

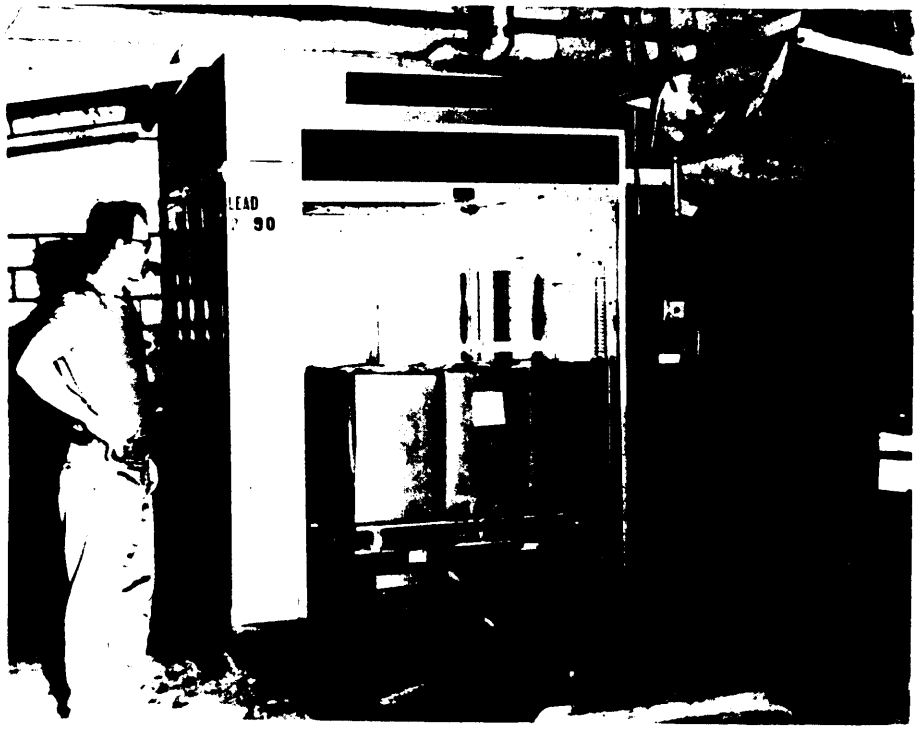

FIGURE 9. Pallet load exiting heat source following shrinking.

As the film cools, the bonding action is completed, producing as stable a load as is achieved with metallic strapping. In the absence of power-assisted bag-dispensing equipment, bags may be applied manually, simply by pulling the bag over the load and pallet. Shrink-film bonded pallet loads may be shipped to all destinations both within CONUS and overseas. This technique may be used for bonding pallet loads of all commodities except nuclear explosives and conventional ammunition up to a weight of 3,000 pounds. This system is also useful in providing supplemental protection to pallet loads of commercially packaged items, although shrink-film bonding alone does not serve to upgrade the level of commercially packaged materiel to a military level or upgrade a pallet load of level B exterior containers to, level A.

4.3.9 Multipacking. Shrink film may be used in lieu of the traditional double- or triple-wall fiberboard container as a medium of consolidating multiple line items for shipment to a single consignee. This method permits the use of lightweight, expendable pallets rather than the heavier wood pallets used with the fiberboard multipack. In the formation of a shrink-film multipack, a fiberboard or plywood sleeve is placed around the pallet as a guide for stacking containers on the pallet. After the pallet load is formed, the sleeve is removed and the loaded pallet Is encapsulated in a PE shrink-film bag and processed through the

Downloaded from http://www.everyspec.com

heat source. The shrink-film multipack provides level B protection and Is authorized for loads weighing up to 1,500 pounds for shipment to CONUS destinations and overseas customers receiving supply support directly from CONUS. Address labels for shrink-film multipacks may be enclosed inside the PE bag prior to shrinking or attached to the outside after shrinking with PPP-T-60 or PPP-T-70 tape. Use of shrink-film multipacks result in considerable material cost savings averaging over $10 per pallet load. Figure 10 illustrates a shrink-film.multipack utilizing a lightweight expendable pallet.

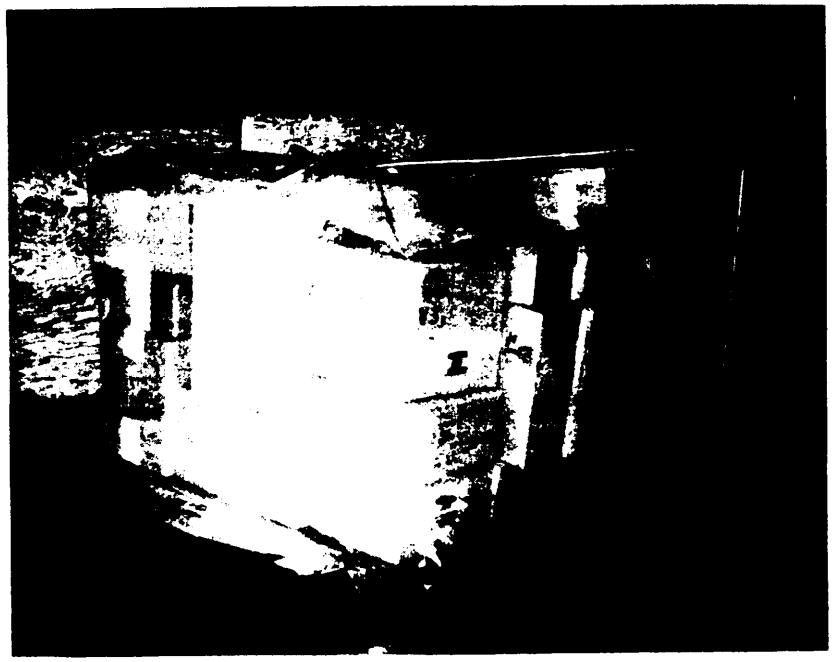

FIGURE 10. Shrink-film multipack utilizing a lightweight expendable pallet.

4.3.10 Tire unitization.

4.3.10.1 Alternate method of unitizing. Shrink film is an alternate method of unitizing most common sizes of pneumatic tires in lieu of metallic strapping. Tires having an OD of 14 inches or more shall be unitized using 6-mil (.006") PE film (type IV of L-P-378) with each unit containing not more than eight tires. In instances when true level A conditions are expected to be encountered , shrink film will conform to type V (UVI (weatherable) PE) of L-P-378. Figure 11 illustrates shrink-film unitization of tires.

Downloaded from http://www.everyspec.com

FIGURE 11. Shrink-film unitization of tires.

Each unit shall not exceed 54 inches in height. When It is known that tires are intended to form a solid load in the SEAVAN, the height of the unitized load shall not exceed 41 inches. In all cases, tires with flaps shall have the flap folded and placed inside the tire in accordance with MIL-T-4 prior to application of shrink film. Commingling of tires with different stock numbers in the same unitized load is prohibited except when shipping tires to a single consignee and/or one or more of the following apply:

a. There is not a sufficient quantity of tires of the same stock number to form a unitized load.

b. The tires are of reasonably similar sizes to permit effective unitization of shrink film.

Downloaded from http://www.everyspec.com

c. The OD of any of the tires is not less than 14 inches or greater than 48 inches.

d. The tires are individually tagged or marked within the unitized load.

e. All tires In the unitized load have the same PD. The use of shrink film for tire unitization allows the "peeling off" of individual tires; i.e., removing one tire from the bundle while the remaining tires remain unitized. Use of UVI shrink film (when required) provides ozone protection to the unitized tires, a property which is not provided by non-UVI film.

4.4 Small parcel shrink-film system. The small parcel shrink-film machine is an automatic sleeve wrapper coupled with a shrink tunnel and designed for placement in line with a power conveyor system. Items traveling along the conveyor pass through the automatic sleeve wrapper and are enclosed In a sleeve of PE film. As the items pass through the film, a photocell activates the cutter bar of the sleeve wrapper which cuts and seals the film to form a sleeve. The newly formed pack then enters and passes through the conveyorized heat tunnel. An automatic excess film roll-up mechanism smooths the two open ends of the sleeve against the pack as It exits the tunnel to form the complete pack. The small parcel shrink system can produce up to 10 small parcel packs per minute intermixed with sizes ranging from 5 inches X 5 inches X 1 inch to 15 inches X 25 inches X 12 inches and weighing from a minimum of 1 pound to a maximum of 70 pounds. In addition, the small parcel shrink-film system can be utilized for such other applications as forming shrink-film exterior containers weighing up to a maximum of 150 pounds, shrink film internal bracing, and commercial packaging. Small parcel systems are available from numerous manufacturers and the price of the equipment varies. Figure 12 illustrates a typical installation of a small parcel system.

Downloaded from http://www.everyspec.com

FIGURE 12. Typical installation of a small parcel sleeve wrapper and heat tunnel .

4.4.1 Small parcel packing. Small parcel packing utilizes the small parcel shrink-film system. It Is a fast, economical, and efficient method of preparing items for shipment by parcel post or commercial parcel service. Items are assembled on preformed trays or fiberboard pads for stability prior to movement through the sleeve wrapper and heat tunnel. Figures 13 and 14 illustrate packages formed by the small parcel shrink system. Items, which because of their size or physical characteristics require no stabilization for movement by conveyor, need not be placed on a tray or pad. Address labels, documentation, mail classification markings, and other required markings shall be placed on top of the items in the pack prior to processing through the automatic sleeve wrapper and shrink tunnel. The address label should be placed in such a manner as to assure its unobstructed visibility. Shipments made under the FMS Program shall have the DD Form 1348-1A (DOD Single Line Item Release/Receipt Document) placed In a PPP-E-540 envelope and attached to the outside of the pack in accordance with MIL-STD-129. Materiel which requires the USPS Form 3811 (Return Receipt, Registered, Insured and Certified Mail) shall have the form attached to the outside of the pack by taping over the ends of the form. Small parcel packs formed by

Downloaded from http://www.everyspec.com

this method are accepted by both USPS and commercial small parcel carriers and may be shipped worldwide. When shipment is made by commercial small parcel carrier, the postal indicia markings on the DD Form 1348-1A address label shall be obliterated. The small parcel shrink-film pack provides level B protection and may be used for all commodities except photographic film and those identified in 3.2 as extremely sensitive to heat transfer. Favorable by-products of this method include less documentation loss, easier opening of the pack, reduced pilferage, and less material for disposal.

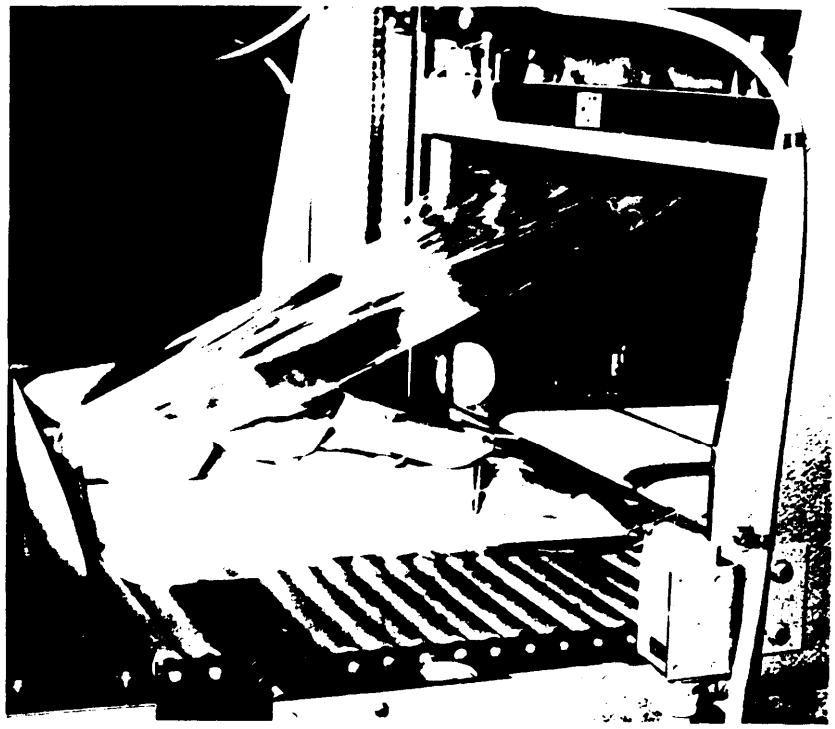

FIGURE 13. Multiple small items assembled on fiberboard tray entering a small parcel sleeve wrapper.

Downloaded from http://www.everyspec.com

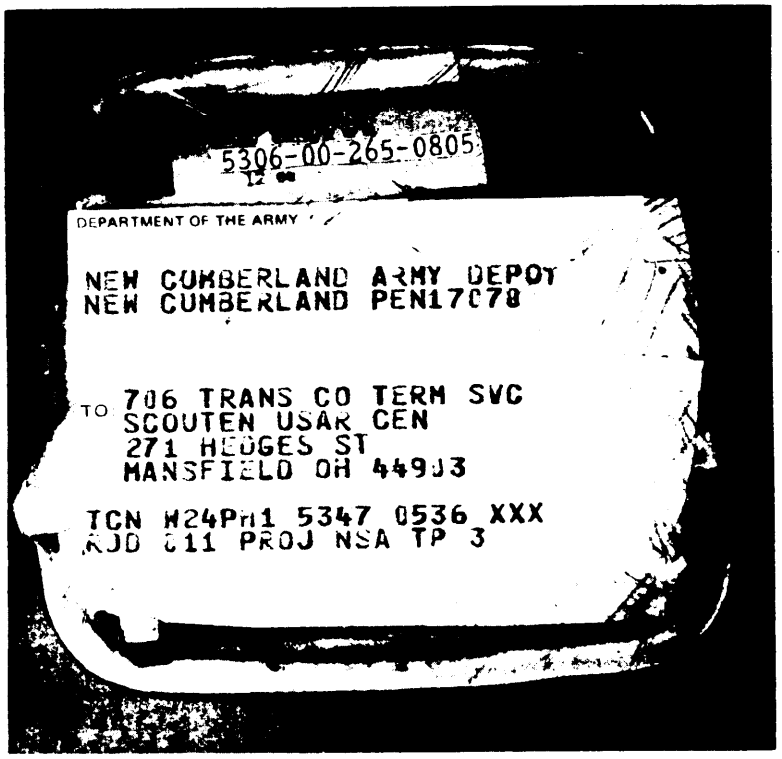

FIGURE 14. Small parcel pack after exiting the small parcel shrink tunnel: ready for mailing.

Downloaded from http://www.everyspec.com

4.4.2 Shrink-film exterior container. The shrink-film exterior container is an authorized replacement for fiberboard single item pack containers up to a maximum size of 30 inches X 36 inches X 24 inches for packs weighing up to 150 pounds when level B protection is required. The shrink-film exterior container may be applied to unit and intermediate packs which are stackable and will form an evenly configured solid load. To stabilize the load, unit and Intermediate containers should be stacked on a sheet of fiberboard slightly smaller than the surface area of the load to prevent tearing or cutting of the film by the fiberboard pad (fig 15). Films used for formation of the shrink exterior container will be of 6-mil thickness for loads weighing up to 100 pounds and 8-mil thickness for loads weighing between 100 and 150 pounds . Address labels and identification markings are placed beneath the film prior to shrinking; however, if unit identification and quantity markings are clearly visible, the identification markings may be omitted. Shrink exterior containers may be shipped to all CONUS consignees and overseas customers when shipment is made through a CCP. Use of shrink exterior containers produce considerable cost savings over the use of fiberboard containers when used in large volume.

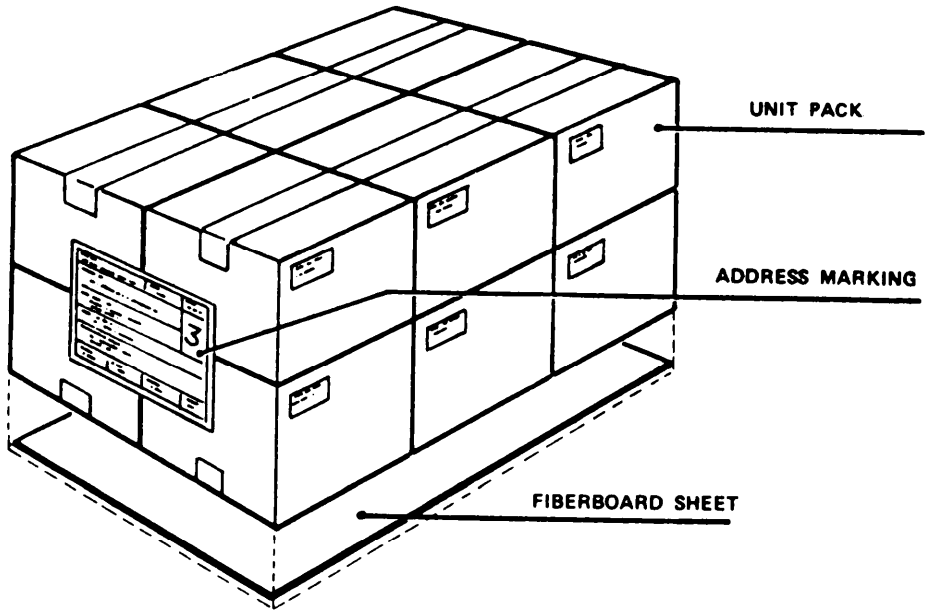

FIGURE 15. Preparation of unit packs for application of a shrink-film exterior container.

Downloaded from http://www.everyspec.com

4.4.3 Shrink-film internal bracing. Shrink-film internal bracing Is a means of immobilizing Items weighing 15 pounds or less inside a fiberboard container by securing the item to a plywood or fiberboard substrate with shrink film. The procedure involves placing the item to be Immobilized on a substrate of plywood or fiberboard (dry scrap material may be used) and processing the item and substrate through the small parcel sleeve wrapper and heat tunnel for bonding the Item to the substrate. The Item and substrate are then placed into a snug-fitting fiberboard container, a fiberboard sleeve Is placed Into the container to hold the substrate firmly in place and the container is appropriately sealed . Shrink-film internal bracing may be used whenever the method of preservation and packing requires the use of a fiberboard container (e.g., method III utilizing a fiberboard container; submethod IA-14 or IA-15 when cushioning or blocking, and bracing with fiberboard cells or pads are required). Shrink-film internal bracing may be employed when applying all levels of protection for all types of supply actions for movement by any mode of transportation. Fiberboard sleeves shall be of single-wall V3C or W5C material of PPP-F-320 for Items weighing up to 5 pounds and double- or triple-wall for items weighing 5-15 pounds. The substrate used shall be of double- or triple-wall fiberboard or 3/8-inch plywood and a minimum of 1 inch and a maximum of 2 inches wider in each dimension than the item itself. Plywood shall be used when there is a small area of Item bearing contact; fiberboard shall be used when a sufficient item area Is available to prevent damage to the substrate. Items weighing up to 7 pounds shall be immobilized using a single application of 5-mil PE film. Items weighing from 7-15 pounds require a double wrap of 5-mil extra-strength film. Use of shrink immobilization results In an average saving of $0.50 per item over conventional methods of blocking and bracing. Figure 16 illustrates steps used in shrink-film internal bracing (immobilization).

Downloaded from http://www.everyspec.com

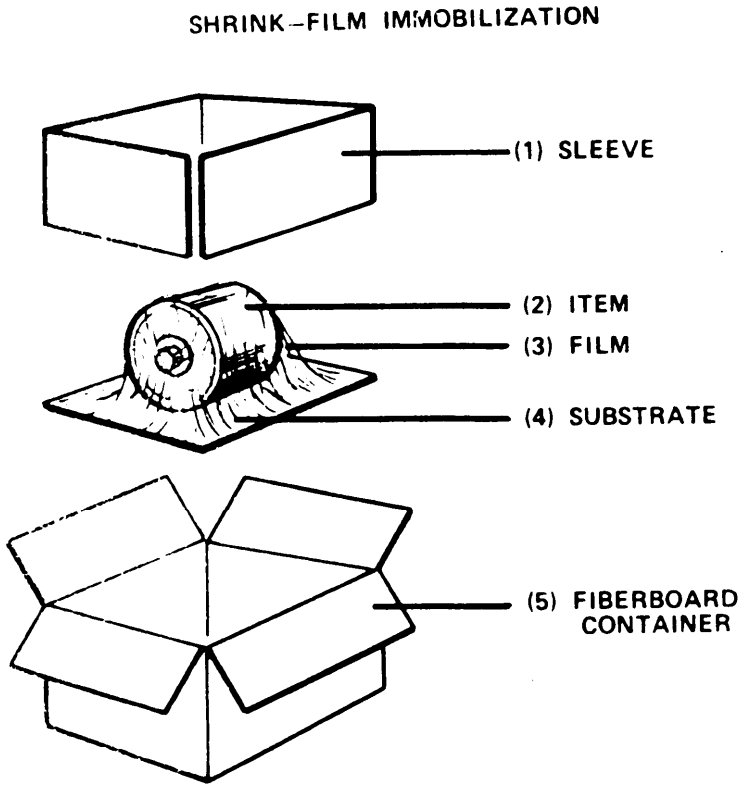

FIGURE 16. Steps used in shrink-film internal bracing (immobilization).

4.4.4 Commercial packaging applications. With the acceptance of commercial packaging, as a means of providing adequate protection to certain military items, comes the need for the technology and methods for applying such packaging. Shrink film provides an effective and economical means of applying commercial packaging to a wide variety of items. Applications may include individual unit packages, exterior containers for small boxed or bagged items, and bundling of hard-to-manage items such as cable assemblies or wiring harnesses and similar items. The use of this concept for such packages also provides flexibility In applying identification markings to shrink-film packages in that markings may be applied directly to the film itself or enclosed under the film prior to shrinking. Commercial packaging guidelines stipulate that markings may be applied to the package by any means which provide legibility including hand lettering. This allows great flexibility in the application of markings when shrink film is used in the application of commercial packaging.

TABLE II. Limited guide to applications of shrink-film methods by shipment destination and mode of transportation.

APPLICATION	CONUS	OCONUS (AIR/CONT/P/P)	OCONUS (SURFACE[4])	ILP (P/P/AIR)	ILP (SURFACE)
Pallet load bonding[1]	X	X	X	X	X
Small parcel packing	X	X	X	X[5]	
Shrink-film immobilization[2]	X	X	X	X	X
Shrink exterior container[3]	X	X	X		
Shrink-film multipack[3]	X	X	X		
Tire unitization	X	X	X	X	X

[1]Use of shrink-film bonding, as an alternative to strapping pallet loads, has no bearing on degree of protection (i.e., a pallet load of level B exterior containers does not qualify as level A after application of shrink-film bonding).

[2]Use of shrink internal bracing in lieu of fiberboard cells or pads as cushioning/blocking/bracing does not affect degree of protection.
Note. This application will not be used with method II packs or for immobilizing items weighing in excess of 15 pounds.

[3]The shrink-film multipack and shrink exterior container provides level B protection.

[4]Nonhazardous cargo will be contained or overpacked by the Military Traffic Management Command to meet protection requirements for surface shipment (shipper service will be billed for cost of overpacking).

[5]Under the ILP (FMS), DD Forms 1348-1A will be placed in a PPP-E-540 envelope and attached to the outside of the pack.

Downloaded from http://www.everyspec.com

Downloaded from http://www.everyspec.com

Part II (Stretch Film)

1. SCOPE

1.1 Scope. Part II of this handbook provides basic information on the use of stretch film In military packaging applications including equipment and materials employed In the formation of stretch-wrapped packages and load units.

1.2 Applicability. The methods described are applicable to and authorized for use by all activities engaged In the packaging of military materiel except as specified In subsequent sections of this publication. Application of the methods described is not intended as mandatory for use in place of separate specific containers or packaging methods required for use with certain categories of commodities or types of items.

2. REFERENCED DOCUMENTS

2.1 Government documents.

2.1.1 Specifications, standards, and handbooks. Unless otherwise specified, the following specifications, standards, and handbooks of the issue listed In that issue of the DODISS specified in the solicitation form a part of this standard to the extent specified herein.

SPECIFICATIONS

MILITARY

MIL-T-4	Tire, Pneumatic, and Inner Tube, pneumatic Tire, Tire with Flap, Packaging and Packing of
MIL-P-116	preservation, Methods of
MIL-P-15011	Pallet, Material Handling, Wood, Post Construction, 4 Way Entry

STANDARDS

MILITARY

MIL-STD-129	Marking for Shipment and Storage
MIL-STD-147	Palletized Unit Loads

Downloaded from http://www.everyspec.com

2.2 Other publications. The following documents form a part of this handbook to the extent specified herein. Unless otherwise specified, the issues of the documents which are DOD adopted shall be those listed in the issue of the DODISS specified In the solicitation. The issues of documents which were not adopted shall be those in effect on the date of the cited DODISS.

Occupational Safety and Health Standards of the Occupational Safety and Health Administration, Department of Labor.

(Application for copies should be addressed to Occupational Safety and Health Administration, US Department of Labor Building, 14th Street and Constitution Avenue, NW., Washington, DC 20210.)

American Society for Testing and Materials, ASTM D3951, Standard Practice for Commercial Packaging.

(Application for copies should be addressed to American Society for Testing and Materials, 1916 Race Street, Philadelphia, PA 19103.)

2.3 Order of precedence. In the event of a conflict between the text of this handbook and the references cited herein, the text of this handbook shall take precedence.

3. GENERAL REQUIREMENTS

3.1 Prior preparation. Prior to execution of the requirements of stretch-film packaging applications described, the items shall be prepared in accordance with MIL-P-116, as appropriate, and packed in exterior containers suitable for the commodity and its redistribution after removal from the unit load.

3.2 Exclusions. Few products need be eliminated from consideration for stretch-wrapping. However, a charge of static electricity is developed during the stretch=wrap operation, especially during the stretch-wrapping of tires under low relative humidity conditions. The intensity of the static charge varies between the generic films with PVC films developing the highest intensities. Although this static charge Is not harmful to tires, it does create a hazard to static-sensitive electronic components or highly flammable materials when either stretch-wrapped or stored in the vicinity of the stretch-wrap operation.

4. DETAILED REQUIREMENTS

4.1. Film materials. Commonly used stretch films include: Pvc, EVA, LDPE, copolymers, and LLDPE. Stretch-film performance will vary depending on the grade of material used and conditions of

Downloaded from http://www.everyspec.com

film manufacture. PVC has the highest degree of relaxation of any stretch film, consequently, It has poor stretch retention capabilities. However, It exhibits good characteristics of stretch, cling, and toughness. LDPE, a predecessor of LLDPE, Is generally a low-cost, low-performance film having limited applicability to military packaging operations. EVA copolymers exhibit excellent properties of stress retention, cling, stretch, and toughness. LLDPE is the newest and most promising of all stretch-film materials and generally has the highest overall performance characteristics of any stretch film.

4.1.1 Production of film. Stretch film is manufactured by the blown, cast, or coextrusion processes. Each method produces a stretch film with different properties that affect performance. In the blown-film extrusion, melted resin is pumped through a heated , circular, slotted die to form a tube. The tube Is air inflated and then air cooled. The tube is collapsed, slit, and opened to a flat sheet. In cast-film extrusion, a straight, slotted die Is utilized to form a flat sheet. Coextrusion is a refinement of the extrusion process described.

4.1.1.1 Film properties. Several properties which relate directly to a film's ability to maintain load Integrity during storage and shipping are as follows:

a. Cling . The desirable property of a film's ability to adhere to itself. It is affected by many external variables such as humidity, dust, and film stiffness.

b. Protrusion puncture resistance. The ability of a material to withstand the force exerted by a protrusion.

c. Cut growth resistance. The ability of a film to resist nick or cut propagation and combination factors which determine a film's toughness. It should be noted that resistance to tear propagation In the cross machine TD of the film is the critical consideration. If the film propagates a tear in that direction, it can come completely off the load. Conversely, if the film propagates a tear in the MD (the direction of the wrap), load integrity can still be maintained.

d. Stretch. The elastic ability of a film to elongate when a pulling force is applied (such as the braking force on a stretch-wrap machine). An increase of stretch in the MD is gained at a loss In applied film thickness and width (neckdown). While it is desirable to have a high MD stretch, more stretch is not always better. As stretch increases, neckdown, slit/tear propagation, and force on the load increase while film thickness (gauge) decreases.

Downloaded from http://www.everyspec.com

e. Stress retention. The residual load expressed as a percent of the original load on the material after the test specimen was maintained at a constant elongation for a specified time. All films tend to relax as soon as they were stretched with most of the relaxation (99 percent) occurring within 24 hours. Typical. stress retention of films stretched to 130 percent of their original length and allowed to relax for 16 hours are 60-65 percent for EVA, LDPE, and LLDPE films; and 25 percent for PVC films. Related to this property is the “rubberband” (or “restretch”) effect which is the ability to contain a load which settles or shifts during storage and shipment.

f. Yield or coverage area per unit weight. The maximum stretch at which a film can be used for a given application while maintaining its desirable characteristics. The usable stretch of a film can vary from application to application. The higher the usable stretch, the less film is required to wrap a load.

4.1.1.2 Selecting the proper film. For maximum cost effectiveness, it is important to choose the right film for a specific application. A film that adequately wraps a load with rounded corners may not be suitable for an irregularly shaped load with sharp projections. Load uniformity influences whether full- (uniform height loads) or spiral-web (variable height loads) equipment will be used and affects the film width required. Also, load density and fragility determines how much crushing force can be applied as well as the film type, gauge, and number of wraps required for unitization.

4.1.2 Stretch-film wrapping advantages/disadvantages. The use of stretch film depending on the specific application can result in advantages such as energy savings (no shrink tunnel); lower material costs; lower capital equipment costs; lower operating and maintenance costs; lower inventory costs (many load sizes can be wrapped with one stock film size); and the ability to withstand shock and vibration and maintain load configuration. Conversely, stretch film generally provides less resistance to moisture than shrink film unless top sheets are used. Also, film abrasion can occur when two stretch-wrapped loads rub together due to the high cling of the film. However, this may be remedied by the development of "one-sided cling" films, some of which are currently on the market.

4.2 Methods of stretch-wrapping In stretch-wrapping, an elastic film is stretched and applied under tension to a single item, a bundle of items, or pallet loads. Two basic methods of applying the film are a full-web application (as high as or higher than the load) and a narrower-web application (usually 20-30 inches wide) wrapped spirally or in bands around the load.

Downloaded from http://www.everyspec.com

4.2.1 Full web. Full-web systems are designed to wrap products relatively constant in dimension. The film width covers the entire surface to be wrapped by matching the film width to the size of the product (fig 17).

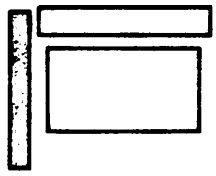

FIGURE 170 Full-web method of stretch-wrapping.

4.2.2 Multiple band. Multiple banding systems apply bands of film at preselected points on the product (fig 18).

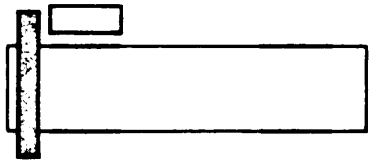

FIGURE 18. Multiple band method of stretch-wrapping.

4.2.3 Spiral. Spiral systems are designed to wrap products of varying lengths and widths with a single film size (fig 19).

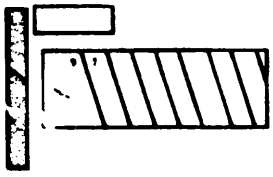

FIGURE 19. Spiral method of stretch-wrapping.

Downloaded from http://www.everyspec.com

4.3 Stretch-film equipment and processes.

4.3.1 Stretch bundling. Stretch-bundling equipment is designed to apply stretch film around a product or products to provide an individual wrap or a means of consolidation. The two primary types of bundling equipment are the planetary and ring or orbital wrapper. With a planetary wrapper, both the package and the film supply move around one another in a planetary motion. (Some similar wrappers permit the package to remain stationary while the film supply rotates around it.) This equipment is portable and quite versatile. However, it cannot be automated and is inherently slow (fig 20).

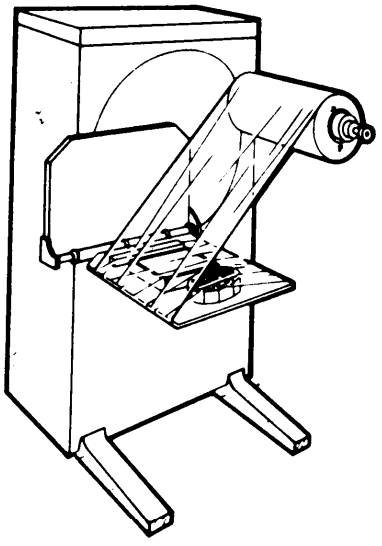

FIGURE 20. Planetary wrapper.

Downloaded from http://www.everyspec.com

With a ring or orbital wrapper, the film is applied in spiral or orbital fashion while the package Is conveyed through the ring. This method provides good production speed and may be used in conjunction with conveyorized packaging systems. This equipment Is particularly useful for wrapping large, bulky packages (fig 21).

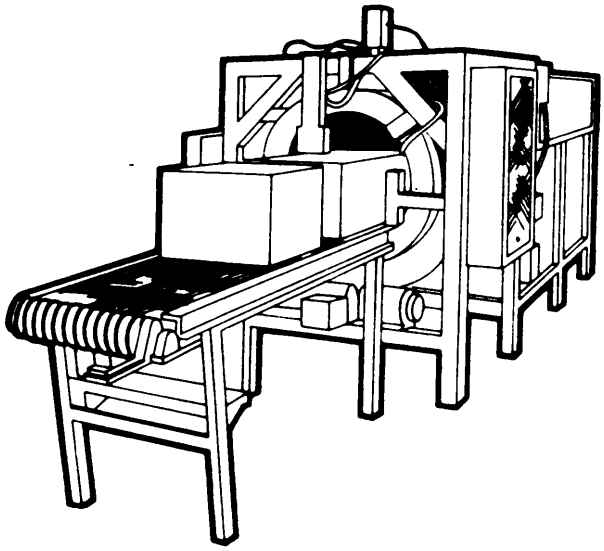

FIGURE 21. Ring or orbital wrapper.

Downloaded from http://www.everyspec.com

4.3.2 Hand-held units. Inexpensive, hand-held, stretch-wrap equipment is available that requires the operator to wrap the load by pulling and stretching the film while walking around the pallet. Generally, a manual wrapper is designed for those who unitize less than 10 pallets per day and have decentralized warehousing, where powered-stretch equipment would not be feasible or would need a backup system. Figure 22 illustrates a manual hand-held wrapper.

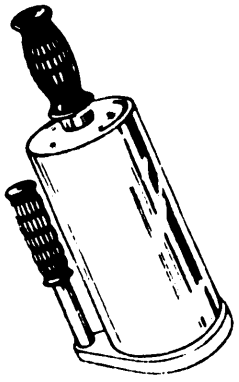

FIGURE 22. Manual hand-held wrapper.

4.3.3 Rotary stretch-wrap equipment. Generally, the equipment operates in conjunction with a powered turntable. The operator positions the end of the film between layers of the product, pre-sets the number of wraps, starts the machine, and adjusts brake tension to achieve optimum stretch for the load being wrapped. After wrapping, the film is cut and sealed to itself through film-to-film cling. The wrap can be a full-web or band/spiral wrap. With semiautomatic rotaries, the load is brought to the. turntable and indexed into position. The operator can start a preprogrammed cycle and cut film at the end of the cycle. The load is then removed by forklift truck or conveyor. In fully automatic systems, the load is fed into position, wrapped, as programmed, and then conveyed from the system without operator assistance.

Downloaded from http://www.everyspec.com

4.3.3.1 Rotary full web wrapper. In one method of rotary wrapping a full web of film is applied to the entire pallet load with each revolution. The film width is the same as the load height (or with some overhang at the top of the load when desired) . The full-web procedure is most effective for loads that are uniform in configuration. Figure 23 illustrates a rotary full web.

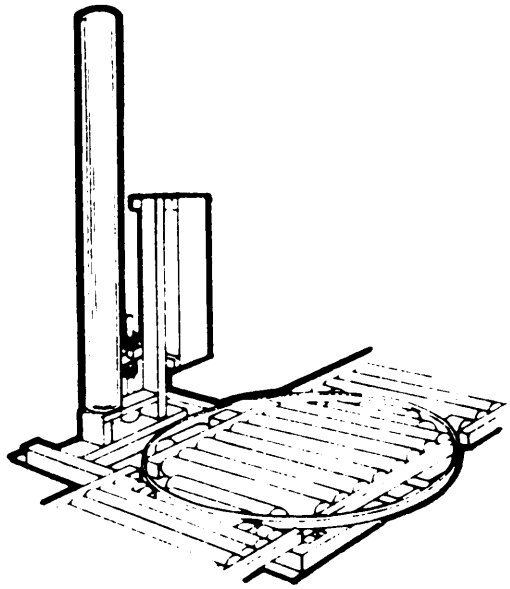

FIGURE 23. Rotary full-web wrapper.

4.3.3.2 Rotary convolute. This method of stretch-wrapping is identical to the spiral mode except that the film is spirally wrapped again to the bottom of the load following the application of a predetermined number of film wraps to the top of the load. At least two additional film wraps are applied in the convolute mode than in the spiral method using the same machine settings.

Downloaded from http://www.everyspec.com

4.3.4 Pass-thru system. With pass-thru equipment (fig 24), the pallet load is pushed into a curtain of film formed by heat sealing two ends of vertically mounted rolls of film. The film is stretched and moved around the trailing side of the pallet. It is then heat sealed and cut off while under tension. The stretch film used is especially designed to resist tearing and enhance heat sealing. Generally, pass-thru equipment is utilized in high-speed or highly automated applications where constant-size loads are involved.

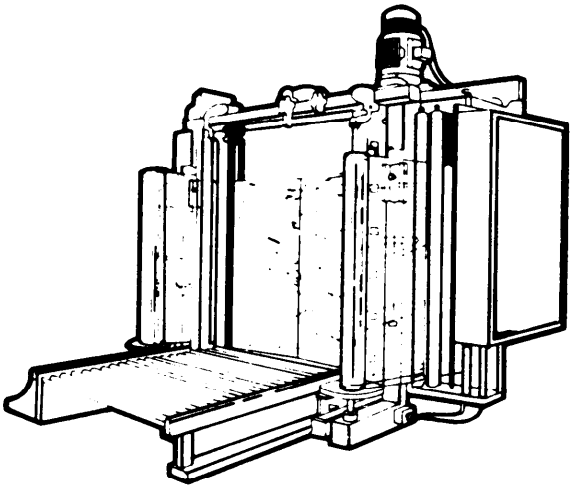

FIGURE 24. Pass-thru equipment.

Downloaded from http://www.everyspec.com

4.3.4.1 Prestretch. Prestretch devices, both powered and non-powered, are designed to stretch the film before it Is applied to the load. The purpose is to provide greater stretch levels than can be obtained with functional braking methods which stretch the film during load application. Most of the prestretch devices consist of two rubber-covered rolls rotated at different speeds. The speed ratios of the rollers are varied to produce a proportional percentage of stretch. Prestretching makes the film longer and thinner, increasing the yield which can lead to cost savings, as much as 60 percent depending on methods used (fig 25).

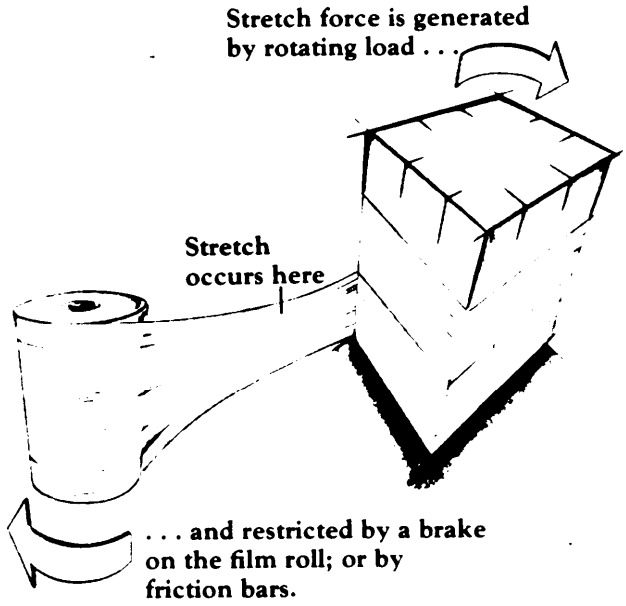

FIGURE 25. Conventional stretch.

Downloaded from http://www.everyspec.com

However, because It tends to decrease the load-holding power or strength of the film, prestretch is more effective for loads requiring light tension to avoid crushing than for loads requiring heavy tension. While prestretch has advantages, It also has certain limitations. Many films lose cling at some prestretch levels and show a significant loss of strength when stretched or prestretched more than 100 percent. However, heavier gauge films with Improved cling characteristics are being developed for prestretch applications (fig 26).

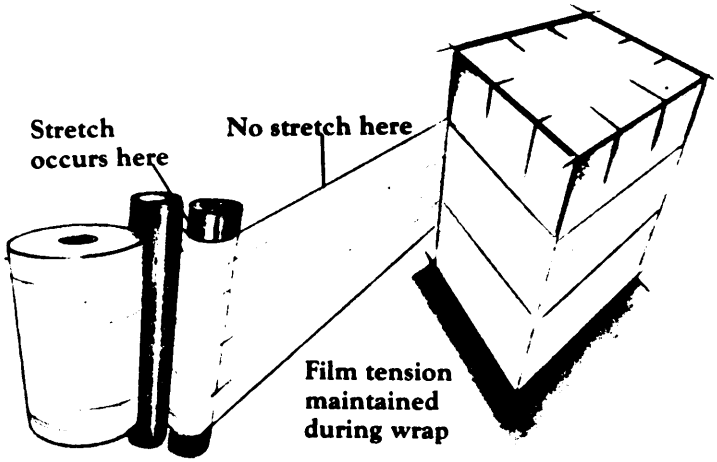

FIGURE 26. Prestretch method.

4.3.4.2 Stretch netting. Two major advantages of stretch netting over the film are strength and breathability. Its unique structure resists the tear propagation often found in films. If one strand breaks, adjacent strands do not. Like film, the netting conforms to odd shapes and provides complete bonding. While the netting does not give the dust/moisture protection available from the film, It Is particularly useful as an alternative to strapping for pallet loads that require a strong bond. The plastic netting, open-mesh construction allows the pallet load to "breathe," a feature often required for commodities that' give off moisture. Stretchable as well as prestretch nettings are available at prices competitive with film. The nettings can be applied with all conventional stretching equipment In the spiral- or full-web configuration.

4.3.5 Tire unitization. Stretch-wrap is a preferred method of unitizing most common sizes of pneumatic tires In lieu of other unitization methods (fig 27). The tire unitization provisions for shrink film outlined in 4.3.10, Part I of this handbook, include tire size, types, quantity, and load height and are equally applicable to stretch-wrap unitization.

Downloaded from http://www.everyspec.com

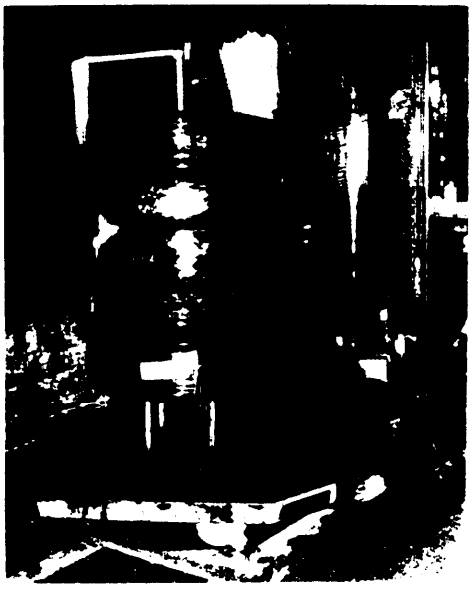

FIGURE 27. Stretch-wrap bonding of tires.

Using one of the films in 4.3.5.1, overlap each of the end tires at least 6 inches and tension the stretch film to a point where a l-inch neckdown is obtained at both the top and bottom of the film as it Is dispensed from the roll. Depending on the wrapping mode used, apply this stretch film as follows:

a. Spiral mode. Apply 30-inch wide film with three full wraps at both the top and bottom of the load and a 70 percent spiral-film overwrap at the center of the load.

b. Convolute mode. Apply 30-inch wide film with two full wraps at both the top and bottom of the load and a 50 percent spiral-film overwrap at the center of the load.

c. Full-web mode. Apply 60-inch wide film with three full plies of film.

4.3.5.1 Stretch-wrapping of tires. The stretch films, 1.5-mil thick, recommended for use In stretch-wrapping tires are cast coextruded (three layers), LLDPE, or a blown, LLDPE film blended with 12 percent EVA during extrusion.

4.3.6 Stretch-wrapping of palletized loads. In addition to the two films recommended above for stretch-wrapping tires, a 1.5-mil thick film made of PVC is also prescribed for palletized

Downloaded from http://www.everyspec.com

loads (fig 28). (Note. This film exhibits excessive loosening at high temperatures which may affect the stability of pyramid stacks of tires. Consequently, it is not recommended for the stretch-wrapping of tires.)

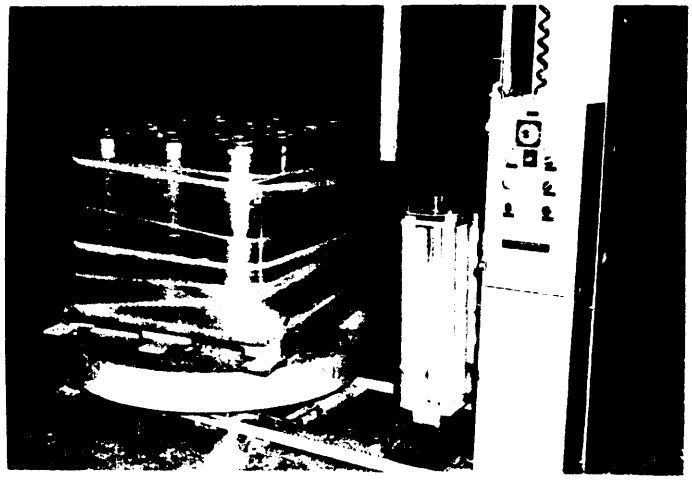

FIGURE 28. Stretch-wrap bonding of palletized loads.

Using the prescribed films, the methods recommended for the stretch-wrapping of palletized loads are as follows:

a. Overlap the pallet a minimum of 6 inches with the stretch film measured from the bottom of the load.

b. Overlap the top of the load at least 4 inches.

c. Tension the stretch film to a point where a l-inch neck-down is obtained at both the top and bottom of the film as it is dispensed from the roll.

d. Apply 30-inch wide film with three full wraps at both the top and bottom of the load and a 50 percent spiral-film overwrap at the center of the load.

Downloaded from http://www.everyspec.com

APPENDIX A

ACRONYM AND DEFINITION LIST

10. SCOPE. For the convenience of users, listed below are acronyms used throughout this publication with their definition shown in the adjacent column. This list will facilitate user identification of acronyms used in the text.

ACRONYM	DEFINITION
CCP	Containerization Consolidation Point
CONT	Container/Containerized
CONUS	Continental United States
DLA	Defense Logistics Agency
DOD	Department of Defense
DODISS	Department of Defense Index of Specifications and Standards
EVA	Ethylene Vinyl Acetate
FMS	Foreign Military Sales
GSA	General Services Administration
ILP	International Logistics Program
LDPE	Low Density Polyethylene
LLDPE	Linear, Low Density Polyethylene
MD	Machine Direction
NRDC	US Army Natick Research and Development Center
NSN	National Stock Number
OD	Outside Diameter
PB	Polybutylene
PD	Priority Designator (MILSTRIP)
PE	Polyethylene
POL	Petroleum, Oils and Lubricants
PVC	Polyvinyl Chloride
SEAVAN	Commercially Owned Remountable Container
TD	Transverse Direction
USPS	United States Postal Service
UVI	Ultraviolet-Inhibited

Downloaded from http://www.everyspec.com

Custodian:
Army--SM
Air Force--69
Navy--SA
DLA--DH

Preparing activity:
Army--SM
PACK Project No. 0752

Review Activities:

Army--AT, GL, AL, MT, MR

AF-71, 80, 82

DLA--CS, GS

User Activity:

Army--ME, MI

Civil Agency Coordinating Activity:

GSA--FSS

*U.S. GOVERNMENT PRINTING OFFICE: 1985-505-038:24265

Downloaded from http://www.everyspec.com

Downloaded from http://www.everyspec.com

STANDARDIZATION DOCUMENT IMPROVEMENT PROPOSAL

(See Instructions – Reverse Side)

1. DOCUMENT NUMBER	2. DOCUMENT TITLE
MIL-HDBK-770A	Shrink Film/Stretch Film in Military Packaging

3a. NAME OF SUBMITTING ORGANIZATION	4. TYPE OF ORGANIZATION *(Mark one)*
b. ADDRESS *(Street, City, State, ZIP Code)*	☐ VENDOR ☐ USER ☐ MANUFACTURER ☐ OTHER *(Specify)*: _____

5. PROBLEM AREAS

a. Paragraph Number and Wording:

b. Recommended Wording:

c. Reason/Rationale for Recommendation:

6. REMARKS

7a. NAME OF SUBMITTER *(Last, First, MI)* – Optional	b. WORK TELEPHONE NUMBER *(Include Area Code)* – Optional
c. MAILING ADDRESS *(Street, City, State, ZIP Code)* – Optional	8. DATE OF SUBMISSION *(YYMMDD)*

DD FORM 82 MAR 1426 PREVIOUS EDITION IS OBSOLETE.

Downloaded from http://www.everyspec.com

INSTRUCTIONS: In a continuing effort to make our standardization documents better, the DoD provides this form for use in submitting comments and suggestions for improvements. All users of military standardization documents are invited to provide suggestions. This form may be detached, folded along the lines indicated, taped along the loose edge *(DO NOT STAPLE)*, and mailed. In block 5, be as specific as possible about particular problem areas such as wording which required interpretation, was too rigid, restrictive, loose, ambiguous, or was incompatible, and give proposed wording changes which would alleviate the problems. Enter in block 6 any remarks not related to a specific paragraph of the document. If block 7 is filled out, an acknowledgement will be mailed to you within 30 days to let you know that your comments were received and are being considered.

NOTE: This form may not be used to request copies of documents, nor to request waivers, deviations, or clarification of specification requirements on current contracts. Comments submitted on this form do not constitute or imply authorization to waive any portion of the referenced document*(s)* or to amend contractual requirements.

(Fold along this line)

(Fold along this line)

DEPARTMENT OF THE ARMY

NO POSTAGE NECESSARY IF MAILED IN THE UNITED STATES

OFFICIAL BUSINESS
PENALTY FOR PRIVATE USE $300

BUSINESS REPLY MAIL
FIRST CLASS PERMIT NO. 12062 WASHINGTON D. C.

POSTAGE WILL BE PAID BY THE DEPARTMENT OF THE ARMY

Director
AMCPSCC
ATTN: SDSTO-TP-P
Tobyhanna, PA 18466-5097