NOT MEASUREMENT SENSITIVE

MIL-HDBK-754(AR)
19 SEPTEMBER 1991

MILITARY HANDBOOK

PLASTIC MATRIX COMPOSITES WITH CONTINUOUS FIBER REINFORCEMENT

AMSC N/A FSC 9330

DISTRIBUTION STATEMENT A. Approved for public release; distribution is unlimited

FOREWORD

1. This military handbook is approved for use by all Activities and Agencies of the Department of the Army and is available for use by all Departments and Agencies of the Department of Defense.

2. Beneficial comments (recommendations, additions, deletions) and any pertinent data that may be of use in improving this document should be addressed to: Commander, US Army Armament Research, Development, and Engineering Center, ATTN: SMCAR-BAC-S, Picatinny Arsenal, NJ 07806-5000, by using the self-addressed Standardization Document Improvement Proposal (DD Form 1426) appearing at the end of this document or by letter.

3. This handbook was developed under the auspices of the US Army Materiel Command's Engineering Design Handbook Program, which is under the direction of the US Army Industrial Engineering Activity.

CONTENTS

CHAPTER 3
CONTINUOUS NONGLASS REINFORCEMENTS: CARBON-GRAPHITE, ARAMID, AND BORON FIBERS

CHAPTER 4
PLASTIC MATRICES FOR COMPOSITES

CHAPTER 5
PROPERTIES OF VARIOUS FIBER-PLASTIC MATRIX COMPOSITES

CHAPTER 6
GENERAL METHODS OF FABRICATION

CHAPTER 7
APPLICATIONS OF CONTINUOUS FIBER-REINFORCED COMPOSITES

LIST OF ILLUSTRATIONS

LIST OF TABLES

LIST OF TABLES (cont'd)

LIST OF ACRONYMS

AEP = N-aminoethyl piperazine
AMS = Aerospace Material Specification
BDMA = benzyldimethylamine
CA = chlorendic anhydride
DAIP = diallylisophthalate
DAP = diallylphthalate
DDS = diamine diphenylsulfone
DDSA = dodecenylsuccinic
DEAPA = diethylaminopropylamine
DETA = diethylenetriamine
DICY = dicyandiamide
DMF = dimethyl formamide
DTA = differential thermal analysis
EVM = earth-viewing module
HDT = heat deflection temperature
HET = chlorendic acid
HEXA = hexamethylenetetramine
HHPA = hexahydrophthalic
HMDA = hexamethylenediamine
MDA = methylene dianiline
MPDA = metaphenylene diamine
NASA = National Aeronautics and Space Administration
NMA = nadic methyl
PA = phthalic anhydride
PAN = polyacrylonitrile
PSA = polysebacic
SAE = Society of Automotive Engineers
TAIC = triallylisocyanurate
TEA = triethylamine
TEPA = tetraethylenepentamine
TETA = triethylenetetramine
Tg = glass transition temperature
TGA = thermogravimetric analysis
THP = tetrahydrophthalic
TMA = trimellitic
USAF = US Air Force

CHAPTER 1
INTRODUCTION

A limited discussion of continuous fibrous reinforcement is presented; the fibers are fiberglass, carbon-graphite, aramid organic, and boron. Advantages in applications are discussed, and "pros and cons" are considered.

1-1 GENERAL

The properties of all basic plastics can be enhanced by the addition of fibers, whiskers and particulates. Plastics so modified are referred to as organic or plastic matrix composites. Composites may consist of a variety of reinforcements in a number of matrix materials. For example, wood is a naturally occurring composite consisting of cellulose fibers in a lignin matrix. Man-made composites include straw-reinforced mud bricks and, more recently, concrete and asphalt. As the plastics industry and polymer chemistry developed, plastics were filled with various particulates or fillers to extend and strengthen these materials. Subsequently, fibers and weaves were used with the glass-reinforced plastics being developed in the 1940s. Today reinforcements include materials such as graphite fibers, boron, glass, organic polymer fibers, silicon carbide, and a number of new inorganic fibers. Matrix materials now being reinforced include metals such as aluminum, titanium, and copper, as well as ceramic materials. There is even a process to make carbon-fiber-reinforced carbon matrix (carbon/carbon) composites for high-temperature applications.

For structural composites plastics are still the principal matrix materials and include both thermoplastics and thermosets including new types such as the liquid crystal polymers. Plastics will remain the most likely matrix candidates for composites because of the substantial weight savings they offer and of the wide range of properties and the ability to tailor them.

The plastic matrix composites discussed in this handbook are restricted to those employing continuous fiber reinforcements.

1-2 STRUCTURAL ARRANGEMENT OF FIBER REINFORCEMENTS

The plastic matrix composites discussed in this handbook contain continuous fibers, in either a nonwoven or woven form, embedded in a common plastic matrix. Such fibers may be used as monofilaments, bundles, rovings, fabrics, or related textile constructions. With nonwoven composites the long filaments can be aligned in a parallel direction which is generally along one axis. This one-axis orientation gives a structure called anisotropic, i.e., having properties that are much different in the direction of the fiber from those in the direction nominally 90 deg to the fiber. Discussion of anisotropic structure is given in several well-known comprehensive monographs (Refs. 1 and 2) and many other sources.

The orientation of the fibrous layers may be angle plied, cross plied, or plied in several directions. These orientations result in a structure called quasi-isotropic, i.e., having properties that tend to approach some level of uniformity when determined in various, yet specific, directions of the reinforced plastic composite. Fibers in nonwoven structures are the commonly used E-, S-,* and S-2* glasses (Refs. 3 and 4), the high-modulus filaments of carbon-graphite, boron (Refs. 5 through 8), or the aromatic nylons termed aramids† (Refs. 9 and 10). The woven fabrics most generally used are made of E-glass. Fabrics of S-glass, carbon-graphite, or aramid are used less. Fabric reinforcements can yield composites that are orthotropic, having properties that tend to be uniform in many directions or that are anisotropic in one or more directions. The orthotropy or anisotropy is determined mainly by the number of yarns in the warp and fill direction of the fabric.

An advantage of composite materials is that by using two or more discrete components in combination for a complete structure, properties not available from either individual component can be attained. Reinforced concretes have had early acceptance for structural applications, and glass-fiber-reinforced plastics have had three or more decades of fairly wide use. Composites that use carbon-graphite, boron, or aramid fibers are currently termed advanced composites; use of these composites is increasing for very specific end-items that require properties and service superior to those available from conventional fiberglass-reinforced plastics. These non-glass fibers have undergone significant development and some definitive use of more than 20 yr for carbon-graphite (Ref. 11), 15-20 yr for boron (Refs. 12 and 13), and more than 10 yr for aramid (Refs. 14 and 15).

*S-glass is a high-quality, performance grade; S-2 glass is a moderate-cost, high-performance type.

†Such aramids, i.e., aromatic polyamide fibers, have been available from one source, DuPont, since 1971. These have the trade name Kevlar®.

1-3 ROLE OF THE FIBER

The fiber of the composite contributes principally to the strength and stiffness characteristics, formability, and machinability of the completed composite. The organic resin matrix primarily determines the transverse mechanical properties, interlaminar shear characteristics, service operating temperature, and process conditions.

The type, orientation, and volume ratio of the fibers determine the strength and stiffness of a product, e.g., in the laminate form. In the unidirectional placement of continuous fiber, maximum properties are obtained in the direction of the fiber. Conversely, minimum properties are found in the transverse direction. The total strength available is given by the weaker plastic matrix material. At interpolated orientations for resisting shear loads, e.g., ±45 deg to fiber direction, the fibers give some reinforcement to the matrix (Ref. 16).

1-4 ROLE OF THE POLYMER MATRIX

The polymeric matrix distributes applied loads throughout the laminate to prevent premature failure. Such early failure occurs when individual fibers become overloaded. Generally, the matrix delineates the shear properties, maximum operating temperatures, and the environmental or chemical resistance of the composite. As the temperature increases, the bonds of the organic plastic weaken, and stiffness is lost. This loss of stiffness, in turn, causes the fibers to deflect more under loading. When the strain-to-failure value of the fibers is reached, the composite fails at a load that is lower than its room temperature strength. Moisture absorbed by certain plastic matrices can have the same effect, particularly at elevated temperature. Matrix voids and contaminants also reduce the mechanical properties of a laminate. The best properties are obtained when the volume ratio of the fibers is controlled to a definite range for the type of fiber and matrix being used (Refs. 17 and 18).

1-5 ADVANTAGES OF COMPOSITES

Advantages that fibrous-reinforced plastic composites have over conventional materials, particularly metals, include

1. *Lower Weight.* 50 to 55% of the density of aluminum and 40 to 70% of the density of titanium
2. *Possible Reduction in Cost.* Fewer parts and fasteners required
3. *Increased Fatigue Resistance.* Little structural degradation upon load cycling because of design to distribute stress
4. *Increased Capability to Fail Safely.* No crack propagation due to integrated design
5. *Increased Protection Against Catastrophic Damage.* Due to multiple load paths.

Engineering composites can be fabricated from wide choices of matrix and continuous fibrous reinforcement materials. This range of choices is advantageous because such composites can be tailor-made to meet high-performance requirements and they offer a considerable range of properties. Composites also can possess a number of advantages when compared with conventional materials (Refs. 19 and 20). For example, composites

1. Can be made with high strength and a high specific strength-to-weight ratio relative to more common engineering materials, including metals
2. Can be made with high stiffness and high specific stiffness that are unattainable with other materials
3. Generally exhibit low density
4. Can exhibit high strength at elevated temperatures
5. Have good impact and thermal shock resistance
6. Have good fatigue strength, which often surpasses that of metals
7. Have good creep strength, which is often better than that of metals
8. Generally have very good oxidation and corrosion resistance
9. Have low, controllable thermal expansion
10. Can have controllable thermal and electrical conductivity
11. Have a stress-rupture life higher than that of many metals
12. Can have predetermined properties designed in to meet particular engineering needs
13. Are at times amenable to the fabrication of large components at cost, equal to or lower than those for metals (Ref. 21).

The noted properties or advantages tend to delineate applications of actual or potential interest. For example, Table 1-1 gives some actual or potential end-item applications of fiber composites related to broad engineering characteristics of the continuous fibrous reinforcement (Ref. 22).

The named applications in Table 1-1 benefit from one or more characteristics in addition to the primary properties of high modulus, high tensile strength, and low density. Other "secondary" properties of importance can include high fatigue or creep resistance, high damping, and relative ease of fabrication. The wide spectrum of available polymer matrices allows a broad choice in creating a composite system that meets environmental service (Ref. 23), impact loading resistance, and other special requirements.

TABLE 1-1. SOME APPLICATIONS OF FIBER COMPOSITES

ENGINEERING CHARACTERISTICS	ACTUAL OR POTENTIAL APPLICATIONS
High Young's Modulus:	
a. Resistance to bending	Radar dishes, masts, pylons, ladders, stressed aerodynamic surfaces, vehicle chasses, gear teeth, turbine and compressor blades, connecting rods, pushrods, rocker arms, window frames, hydrofoil and aquaplaning surfaces
b. Resistance to stretching	Tire cords, drive belts, hydraulic equipment and piping, tanks, vessels, cables, pressure vessels, tie-rods
c. Resistance to torsion	Drive shafts, valve springs, drill shafts
High Tensile Strength:	
a. Resistance to breakage by externally imposed forces	Vehicle bumpers, golf clubs, camping gear, packaging, bows, suitcases, prestressing of ceramics, vehicle bodies or panel structures, e.g., ribs to glass-reinforced plastic sheeting
b. Resistance to centrifugal and other intrinsic forces	Fans, alternator components, certrifuges, beam choppers, airscrews, long vertical cables, vehicle wheels, helicopter rotors, turbine and compressor blades
Low Density:	
a. Weight saving directly	Aerospace vehicles, submarines, cranes, splints and artificial limbs, high-speed boats and hydrofoils, hovercraft, helicopters
b. Reduction in momentum change	Reciprocating components (linear, angular) for loom parts, equipment driven by printed-wiring servo motors, computer tape spools, traction pantographs, high-speed vehicle suspensions and wheels
Other Characteristics:	
a. High electrical conductivity	Furnace heating elements, commutator and slip-ring brushes
b. High resistance to corrosion	Propellers, chemical plants and equipment, surgical fabrications and implants.
c. Low neutron capture cross section	Babbitts and similar irradiation containers
d. Low coefficient of friction and wear rates	Bearings, sliding and rubbing components, skis, gear tooth surfaces, slow and heavy bearings
e. Very low thermal expansion	Gages, templates

TABLE 1-2. ADVANTAGES AND DISADVANTAGES OF FIBER REINFORCEMENTS

FIBER	ADVANTAGE	DISADVANTAGE
Fiberglass	Resistance to mildew and rot, resistance to chemicals, high tensile strength, perfect elasticity, good electrical insulation, low cost, good processibility	Glass friable and brittle, surface treatment and lubrication required, subject to static fatigue, lowest modulus of elasticity
Carbon-Graphite	High modulus, low thermal expansion, high electrical conductivity, low density, low coefficient of friction, resistance to chemicals, resistance to creep, good virbration damping, high temperature resistance, zero or very low thermal linear expansion	High cost, poor impact resistance
Aramid	Lightweight, high flexural and compressive modulus, good electrical and thermal insulation properties, radar and sonar transparency; good processibility, low creep, low notch sensitivity, chemical resistance, good impact resistance	Lower interlaminar shear strength, lower flexural and compressive strength, attacked by UV light, lower high-temperature service, poor cutability, requires surface treatment
Boron	High strength, very high modulus, very high compressive strength, high hardness, low thermal conductivity and expansion, high-temperature resistance	Very high cost, limited number of suppliers, limited materials forms (epoxy/boron tape)

1-6 SUMMARY

Most plastic resins are not suitable for structural applications. Although many resins are extremely tough, most lack strength, stiffness, and deform under load with time. By mixing strong, stiff, fibrous materials into the plastic matrix, a variety of structural composite materials can be formed. The properties of these composites can be tailored by fiber selection, orientation, and other factors to suit specific applications.

Table 1-2 briefly summarizes the advantages and disadvantages of fiberglass, carbon-graphite, aramid (Kevlar® 49), and boron fibers.

REFERENCES

1. G. Lubin, Ed., *Handbook of Fiberglass and Advanced Plastic Composites*, Van Nostrand Reinhold Co., New York, NY, 1969.
2. G. Lubin, Ed., *Handbook of Composites*, Van Nostrand Reinhold Co., New York, NY, 1982.
3. D. G. Mettles, "Glass Fibers", *Handbook of Fiberglass and Advanced Plastics Composites*, Van Nostrand Reinhold, Co., New York, NY, 1969, pp. 143-81.
4. C. E. Knox, "Fiberglass Reinforcement", *Handbook of Composites*, Van Nostrand Reinhold Co., New York, NY, 1982, pp. 136-59.
5. J. C. Bowman and J. H. Brannan, "Graphite Reinforcement for Plastic Composites", *Handbook of Fiberglass and Advanced Plastics Composites*, Van Nostrand Reinhold Co., New York, NY, 1969, pp. 237-54.
6. D. M. Riggs, R. J. Shuford, and R. L. Lewis, "Graphite Fibers and Composites", *Handbook of Composites*, Van Nostrand Reinhold Co., New York, NY, 1982, pp. 196-271.
7. L. E. Line, Jr., and U. V. Henderson, Jr., "Boron Filament and Other Reinforcements Produced by Chemical Vapor Plating", *Handbook of Fiberglass and Advanced Plastics Composites*, Van Nostrand Reinhold Co., New York, NY, 1969, pp. 201-36.
8. H. E. DeBolt, "Boron and Other High-Strength, High-Modulus, Low-Density Filamentry Reinforcing Agents", *Handbook of Composites*, Van Nostrand Reinhold Co., New York, NY, 1982, pp. 171-95.
9. C. C. Chiao and T. T. Chiao, "Aramid Fiber and Composites", *Handbook of Composites*, Van Nostrand Reinhold Co., New York, NY, 1982, pp. 272-317.
10. G. E. Zahr, "An Improved Aramid Fiber for Aerospace Applications", SAMPE Journal 21, 15-8 (November/December 1985).
11. G. E. Cranch, "Unique Properties of Flexible Carbon

Fibers", *Proceedings of the Fifth Conference on Carbon*, Vol. 11, Pergamon Press, New York, NY, 1962.

12. C. P. Talley, "Mechanical Properties of Glassy Boron", J. Applied Physics **30**, 1114 (1959).
13. C. P. Talley, *et al.*, *Boron Reinforcement for Structural Composites Part II*, ASD-TDR-62-257, Texaco Experiment, Inc., Richmond, VA, April 1963.
14. T. T. Chiao, M. A. Hamstad, M. A. Marcon, and J. E. Hanafu, *Filament-Wound Kevlar® 49/Epoxy Pressure Vessels*, Report UCRL-51466, Lawrence Livermore National Laboratory, Livermore, CA, 1973.
15. N. J. Abbott, J. G. Donovan, M. M. Schapee, and J. Skelton, *Some Mechanical Properties of Kevlar and Other Heat-Resistant, Nonflammable Fibers, Yarns and Fabrics*, Technical Report AFML-TR-74-65, Part III, Air Force Materials Laboratory, Wright-Patterson Air Force Base, OH, 1975.
16. S. W. Tsai, *et al.*, *Analysis of Composite Structures*, NASA Report CR-620, prepared by Philco Corporation, Newport Beach, CA, 1966.
17. R. H. Krock and L. J. Broutman, "Principles of Composites and Composite Reinforcement", *Modern Composite Materials*, Addison-Wesley Publishing Co., Reading, MA, 1967, pp. 3-8.
18. M. J. Yokata, "In-Process Controlled Curing of Resin Matrix Composites", SAMPE Journal **14**, 11 (July/August 1978).
19. R. T. Schwartz and H. S. Schwartz, *Fundamental Aspects of Fiber-Reinforced Plastics Composites*, John Wiley & Sons, Inc., New York, NY, 1968.
20. MIL-HDBK-23A, *Structural Sandwich Composites Part III*, 30 December 1968.
21. R. Della Rocca and R. Scott, *Engineering Applications of Composites*, Academic Press, New York, NY, and London, England, 1974.
22. J. Delmonte, *Technology of Carbon and Graphite Fiber Composites*, Van Nostrand Reinhold Co., New York, NY, 1981.
23. J. Hertz, "High-Temperature Strength Degradation of Advance Composites", *SAMPE Symposium*, Vol. 3, Huntsville, AL, October 1971.

CHAPTER 2
CONTINUOUS FIBERGLASS REINFORCEMENT

Information is presented on the properties and various forms of fiberglass. Yarn nomenclature is given, and various weaves are discussed. Some characteristics of surface treatments, sizings, and finishes are given.

2-1 BACKGROUND

Continuous fiberglass is used in a number of forms, such as strand bundles, filaments, yarn, mats, woven fabrics, and unwoven broad goods or roving. Much of the fabrication technology for fiberglass-resin composites forms the basis of the subsequent methods used for graphite, organic aramid, or boron fiber reinforcement technology for advanced composites. Domestic fiberglass production of all grades is produced at a rate of well over 450 million kilograms (one billion pounds) per year. High-performance fiberglass reinforcements are only a small percentage of this level of production.

2-2 FIBERGLASS TYPES

The principal glass compositions for structural reinforcements (Ref. 1) are E-glass, S-glass, and S-2 glass. Other types, such as C-glass and A-glass, are used for nonstructural applications. The letter designations assigned refer to usage, e.g., E for electrical, C for chemical, and S for high strength. E-glass, based on lime-alumina-borosilicate, remains the workhorse of the composites industry and is widely used with plastic matrices. Most woven fabrics are made from this glass. S-glass, a silica-alumina-magnesia composition, was developed for improved tensile properties, and is used as roving or other nonwoven forms. To a lesser extent S-glass is used as a woven fabric. It is used in critical military and aerospace composites because of its high strength, uniformity, and structural integrity. S-2 glass is a silica-alumina-magnesia glass formulation similar to S-glass that offers somewhat similar performance at about one third the cost. Because of this cost differential, S-2 glass has been a serious contender for replacement of S-glass in engineering structures. An R-glass has been introduced, which is equivalent to the S-2 glass produced domestically, i.e., it has almost twice the tensile strength of E-glass and a slightly higher tensile modulus. It is being used in military applications in Europe.

The cost of E-glass roving is approximately $1.65 per kilogram ($0.75 per pound). Certified S-glass roving, which can meet critical performance requirements, can sell for more than $17.65 per kilogram ($8.00 per pound). Resin-impregnated tapes of S-glass can sell for $26.45 to $110.25 or more per kilogram ($12.00 to $50.00 or more per pound). Costs for similar E-glass prepreg products may be $8.80 to $11.00 or more per kilogram ($4.00 to $5.00 or more per pound). These prepreg prices vary widely due to the variety and quality of products available and to product demand.

2-2.1 BASIC CHARACTERISTICS

The properties of glass fibers will vary with the chemical composition and fabrication process, but the following inherent characteristics make them ideal for composite reinforcements (Refs. 1 and 2):

1. *High Tensile Strength.* Glass fibers have a high tensile strength-to-weight ratio. Monofilament strengths, which are considerably higher than roving strengths, are useful for comparisons and certain test purposes. Such strengths, however, are not attained in composites. Tensile tests on strands or multiple-end roving, normally performed on cured resin-coated fibers, are closer to the fiber strengths attained in composites. The effect of roving-end count on average tensile strength is not known with any degree of precision. It can be assumed, however, that test results on rovings of up to 60 ends do not differ significantly from single-end roving. Filament diameter, however, does influence the tensile strength of fiberglass. Most of the values reported in the literature are on the "G" diameter filament of 9.7 μm (0.00038 in.).

2. *Modulus of Elasticity.* The modulus of elasticity may be determined indirectly by measuring the velocity of sound through the fiber or directly from load-deformation curves. Generally accepted values for the modulus are given as 72,395 MPa (10.5×10^6 psi) for E-glass and 85,495 MPa (12.4×10^6 psi) for S-glass. Values may be higher for highly annealed glasses due to "heat compaction". Load-deformation curves for single filaments show a linearity up to break. Ultimate strains are approximately 4.8% for E-glass and 5.4% for S-glass. Load-deformation curves for strands or roving show a departure from linearity that begins at tensile strengths of approximately 1379 MPa (200×10^3 psi) for E-glass and 2068 MPa (300×10^3 psi) for S-glass.

3. *High Heat Resistance.* Glass fibers gain in strength as the temperature rises from room temperature to 200°C (400°F). Beyond 200°C (400°F) strength and flexibility decrease. However, approximately 50% of the strength is still retained at 370°C (700°F) and 25% at 540°C (1000°F).

4. *Fire Resistance.* Glass is inorganic; therefore, fabrics made from glass fiber yarns are incombustible.

5. *Good Thermal Conductivity.* Glass rovings have a high thermal conductivity and a low coefficient of linear thermal expansion.

6. *Good Moisture Resistance.* Glass fibers do not absorb moisture. They do not swell, stretch, rot, or mildew in contact with water.*

7. *Good Corrosion and Chemical Resistance.* Glass fibers are resistant to attack by most chemical solutions. They resist all organic solvents and most acids and alkalis.

8. *Relatively Superior Durability.* Glass fibers have excellent weatherability. They are not affected by sunlight, fungus, or other forms of biodegradation.

9. *Excellent Electrical Properties.* E-glass fibers have a high dielectric strength and a low dielectric constant.

10. *Low Space Factor.* Glass fibers have a specific gravity of 2.54 and thus take little space.

11. *Economy.* Compared to other high-performance fibrous reinforcements, glass fibers have a low cost.

E-glass was developed for production of continuous fibers and is considered the standard textile glass. Most continuous fiberglass produced is of this variety. It does not have a single composition. S-glass composition, however, is well defined but does contain traces of impurities. Table 2-1 gives the general composition of E-glass and S-glass in percent by weight.

*Glass fibers do have a definite level of corrosion or deterioration in even as mild a liquid as plain water. The reason is geometry: A pane of glass attacked at a rate of 15.5 mg/m²/day (0.01 mg/in.²/day) would lose 0.18% of its weight in a year, whereas a glass fiber of 0.010 mm (0.00040 in.) diameter with a surface area of 1422 mm²/g (10^5 in.²/lb) attacked at the same rate would lose 0.25% of its weight each day.

TABLE 2-1. COMPOSITION OF E- AND S-GLASS

COMPONENT	E-GLASS, %	S-GLASS %
SiO_2	52-56	65
Al_2O_3	12-16	25
CaO	16-25	—
MgO	0-5	10
B_2O_3	5-10	—
Na_2O and K_2O	0-2	—
TiO_2	0-1.5	—
Fe_2O_3	0-0.8	—
F_2	0-1.0	—

S-glass has a tensile strength 33% greater and a modulus of elasticity 20% greater than those of E-glass. Important properties of S-glass are its high strength-to-weight ratio, its retention of strength at increased temperatures, and its high fatigue limit. S-glass has been used in rocket motor cases, high-performance aircraft parts, and other products for which enhanced mechanical performance is needed. Table 2-2 gives typical properties for E-glass and S-glass, respectively.

TABLE 2-2. PROPERTIES OF E-GLASS AND S-GLASS (Refs. 2-6)

PROPERTIES	E-GLASS	S-GLASS
Physical Property:		
Specific gravity, dimensionless	2.54	2.49
*Mechanical Properties:**		
a. Virgin tensile strength at 22°C (72°F), MPa (psi)	3447 (500,000)	4585 (665,000)
b. Yield strength at 538°C (1000°F), MPa (psi)	827 (120,000)	1896 (275,000)
c. Ultimate strength at 538°C (1000°F), MPa (psi)	1724 (250,000)	2413 (350,000)
d. Modulus of elasticity, MPa (psi)		
At 22°C (72°F)	72,395 (10,500,000)	85,495 (12,400,000)
After heat compaction at 22°C (72°F)	85,495 (12,400,000)	93,079 (13,500,000)
After heat compaction at 538°C (1000°F)	81,358 (11,800,000)	88,942 (12,900,000)
e. Elastic elongation at 22°C (72°F), %	4.8	4.8
*Thermal Properties:***		
a. Coefficient of thermal expansion, cm/(cm·°C) (in./(in.·°F))	5.04×10^{-6} (2.8×10^{-6})	2.88×10^{-6} (1.6×10^{-6})
b. Specific heat at 24°C (75°F), J/(kg·K) (Btu/(lb·°F))	804 (0.192)	737 (0.176)
c. Softening point, °C (°F)	846 (1,555)	970 (1,778)
d. Strain point, °C (°F)	616 (1,140)	760 (1,400)
e. Annealing point, °C (°F)	657 (1,245)	810 (1,490)
*Electrical Properties:***		
a. Dielectric constant at 22°C (72°F), dimensionless		
At 10^6 Hz	5.80	4.53
At 10^{10} Hz	6.13	5.21
b. Loss tangent at 22°C (72°F), dimensionless		
At 10^6 Hz	0.001	0.002
At 10^{10} Hz	0.0039	0.0068
*Acoustical Property:**		
Velocity of sound, m/s (ft/s)		
Calculated	5334 (17,500)	5852 (19,200)
Measured	5486 (18,000)	—
*Optical Property:**		
Index of refraction, dimensionless	1.547	1.523

*Properties measured on glass fibers
**Properties measured on bulk glass

2-2.2 FIBERGLASS FORMS

The various forms that find use in continuous fiberglass-reinforced plastics are presented in Table 2-3.

2-3 FIBERGLASS STRANDS AND ROVINGS—FABRICATION

It was common practice to attenuate glass through bushings having either 204 or 408 holes in order to produce strands containing those numbers of filaments and then to supply 1-, 12-, 15-, 20-, 30-, and 60-end rovings made from such strands. Although many suppliers still use this practice, others are attenuating fiberglass through bushings containing up to several thousand holes so that they can make heavy roving containing only a single strand. Because the strands are not twisted, rovings made with the larger single strands are equivalent, for most purposes, to those made with the smaller multiple strands. Filaments that make up the strand can be produced in diameters ranging from 2.54 to 25.4 μm (0.00010 to 0.0010 in.). Table 2-4 lists the fiber diameters of the most widely used E-glass rovings in continuous reinforced plastics.

Through the years the predominant fibers were "G" and "K"; however, in recent years the trend has been toward using larger diameter fibers—up to "T"—for filament winding and pultrusions. Military specification MIL-R-60346, *Roving, Glass, Fibrous for Prepreg Tape and Roving, Filament Winding, and Pultrusion Applications*, lists filament diameters "G" through "T" for fiberglass roving.

2-3.1 TYPES OF ROVINGS

There are two types of rovings—continuous strand and spun strand. Continuous strand rovings consist of parallel-wound strands available in a number of strands or ends from 6 or 8 to 120. Continuously spun roving is a bulkier single strand looped back and forth upon itself and held together by a slight twist and by the use of a resinous sizing. Spun roving is lower in cost than continuous strand roving and produces only low- to medium-strength laminates.

2-3.2 ROVING DESIGNATIONS

With the development of large, high-throughput bushings, glass suppliers are designating roving by yield (yards per pound) and a filament diameter code in addition to the abbreviation for the type and class of glass, as shown in Table 2-5. Previously, rovings were based on end count, e.g., 12, 20, 30, 60, and 120. The yield for a given yarn number may be obtained by

$$\text{yield} = \frac{\text{bare-glass yardage per pound}}{\text{end count}}, \text{ yd/lbm} \quad (2\text{-}1)$$

An application of Eq. 2-1 is illustrated by using yarn ECG 135-60 from Table 2-5. The yarn number designation indicates that "135" is 1/100th of the bare-glass yardage per pound and "60" is the end count. Thus by Eq. 2-1

$$\text{yield} = \frac{135 \times 100}{60} = 225 \text{ yd/lbm or } 454 \text{ m/kg.}$$

TABLE 2-3. FIBERGLASS FORMS (Refs. 6 and 7)

TYPE	GENERAL DESCRIPTION
Strand or end	A primary bundle of continuous filaments combined in a single compact unit without twist
Roving or tow	A loose assemblage of parallel continuous fibrous strands with very little twist that are used for circumferential or unidirectional reinforcements. Typical strand counts are 12, 20, 30, and 60.
Filament	A fiber characterized by extreme length
Yarn	Strands of fiber, or filament, in a form suitable for weaving. Yarns are obtained by combining single strands through twisting and plying operations.
Reinforcing mats	A web of randomly oriented fiber strands chemically or physically bonded to provide rapid and thorough resin wetting. It is available in area/mass densities ranging from 0.23 to 1.37 kg/m^2 (0.75 to 4.5 ozm/ft^2).
Woven roving	A heavy, drapable material made by using rovings as both the warp and fill in a loom.
Woven fabric	Consists of twisted and plied strands of fibrous glass fabricated on textile looms or weaving equipment. It is made in variable area/mass densities from 0.08 to 1.36 kg/m^2 (2.5 to 40 ozm/yd^2) and in thickness from 0.89 to 1.22 mm (0.035 to 0.048 in.).

TABLE 2-4. FILAMENT DIAMETERS USED IN E-GLASS FIBER ROVING PRODUCTS

LETTER DESIGNATION	NOMINAL FILAMENT DIAMETER*		NOMINAL YIELD FOR A 204-FILAMENT STRAND**		CORRESPONDING TEX VALUE FOR A 204-FILAMENT STRAND†
	μm	in.	m/kg	yd/lbm	TEX VALUE
B	3.3	0.00013	274,919	136,375	3.4
C	4.6	0.00018	132,092	65,525	7.6
D	5.8	0.00023	78,016	38,700	12.8
E	7.1	0.00028	51,587	25,590	19.3
F	8.4	0.00033	36,690	18,200	27.2
G	9.6	0.00038	27,447	13,615	36.3
H	10.9	0.00043	21,681	10,755	46.0
J	12.2	0.00048	17,387	8,625	57.3
K	13.5	0.00053	13,890	6,890	71.7
L	14.7	0.00058	11,571	5,740	86.1
M	16.0	0.00063	9,787	4,855	101.8
N	17.3	0.00068	8,392	4,163	118.8
P	18.5	0.00073	7,273	3,608	137.1
S	22.4	0.00088	4,989	2,475	199.8
T	23.6	0.00093	4,459	2,212	233.5
U	24.9	0.00098	4,012	1,990	248.5

*In fiber glass technology, filament diameters are determined by actual measurement on a calibrated screen of projection microscope at 2000× or by micrometer eyepiece.

**Yd/lbm divided by 100 is also used to express strand count for each letter designation; yd/lbm naturally varies inversely with both the filament diameter and the number of filaments per strand.

†The tex value generated toward the establishment of a universal yarn-measuring system, is defined as the mass, in grams, per 1000 metres.

TABLE 2-5. YIELD AND BREAKING STRENGTH OF SOME CONTINUOUS FIBERGLASS ROVING

DESIGNATION	YIELD		MINIMUM BREAKING STRENGTH	
	m/kg	yd/lbm	N	lb
ECG 135-60	454	255	890	200
ECG 135-30	917	455	445	100
ECG 135-20	1387	688	298	67
ECG 135-12	2351	1166	178	40
ECK 75-34	536	266	907	204
ECK 75-24	645	320	641	144
ECK 75-18	859	426	480	108
ECK 75-17	911	452	454	102
ECK 75-14	1113	552	374	84
ECK 75-12	1306	648	320	72
ECK 75-11	1431	710	294	66

2-3.3 ROVING CHARACTERISTICS

Rovings that are primarily used in filament winding are judged by the following characteristics:

1. *Tensile Strength.* Attributable to the glass composition although influenced by the performance of the sizing material

2. *Strand Integrity.* The degree of bonding between filaments in the individual strands (ends)

3. *Yield.* Metres per kilogram (yards per pound mass)

4. *Filament Diameter.* Millimetres (inches)

5. *Ribbonization.* The degree to which the strands are held together in the roving bundle

6. *Catenary.* The degree of sag between the individual strands within the roving bundle

7. *Wet Out.* The speed and degree to which the roving is wetted by the resin

8. *Hardness or Softness.* The degree to which the individual moving strands either retain their integrity (hardness) or open readily, i.e., attain a high degree of filamentation (softness). The hardness or softness of roving is determined by changes in the binder composition and winding conditions.

2-4 YARNS

Yarns are formed by twisting two or more strands of 204 filaments each into a single, continuous length for weaving. (See Fig. 2-1.) The strands are either "Z"- or "S"-twisted for plying into the final yarn. The yarn has an "S" twist if the strands assume an ascending right to left configuration when hanging vertically and a "Z" twist when presenting an ascending left to right configuration. Twisting prevents the strands from kinking or cork-screwing. When plying strand, the twist of one strand should be countered, e.g., a "Z" twist is an opposite twist to an "S" twist used to obtain a balanced yarn, which does not kink or unravel.

2-4.1 YARN NOMENCLATURE

A system for identifying fiberglass textile yarns, as described in Fig. 2-2, is required because a wide variety of types are produced. The identifying nomenclature consists of two basic parts: an alphabetical and a numerical description. Fig. 2-2 contains the meaning of the letters and numerals.

As illustrated, the letters indicate the basic strand by glass composition, filament type, and filament diameter, whereas the numbers identify strand weight and yarn construction. The strand weight is the first series of numbers following the letters and indicates approximate bare-glass yardage per pound in hundreds, i.e., to compute the number of yards in a pound of strand, multiply the strand weight by 100. The second series of numbers designates the number of basic strands in continuous filament yarns. The first digit indicates the number of single strands twisted together. (Twisted single strands are commonly referred to as "singles" yarn and are designated as 1/0.) The second digit—separated from the first digit by a virgule—designates the number of strands plied together. To find the total number of strands, multiply the two numbers together. For "singles" 0 is multiplied as a 1.

For the yarn illustrated in Fig. 2-1, ECG 150 2/3, the nomenclature is as follows:

1. "E" for electrical glass

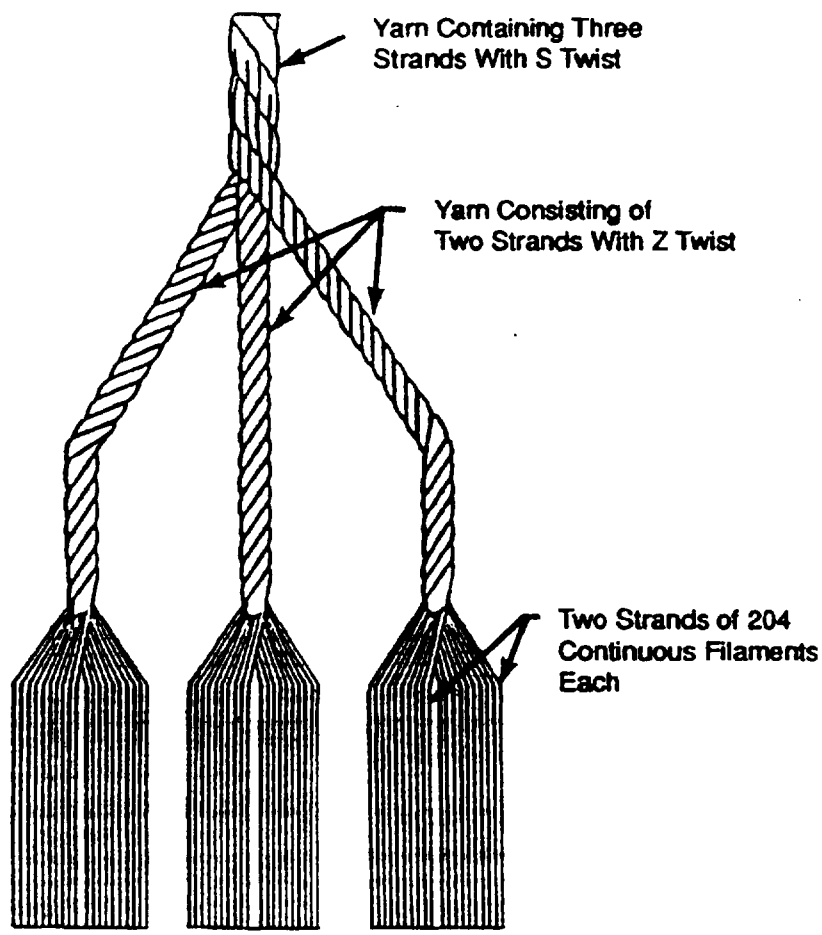

This yarn is composed of 1224 single filaments. If it were made of electrical grade glass and of the "G" filament diameter, it would be designated ECG 150 2/3.

Figure 2-1. Basic Yarn Construction

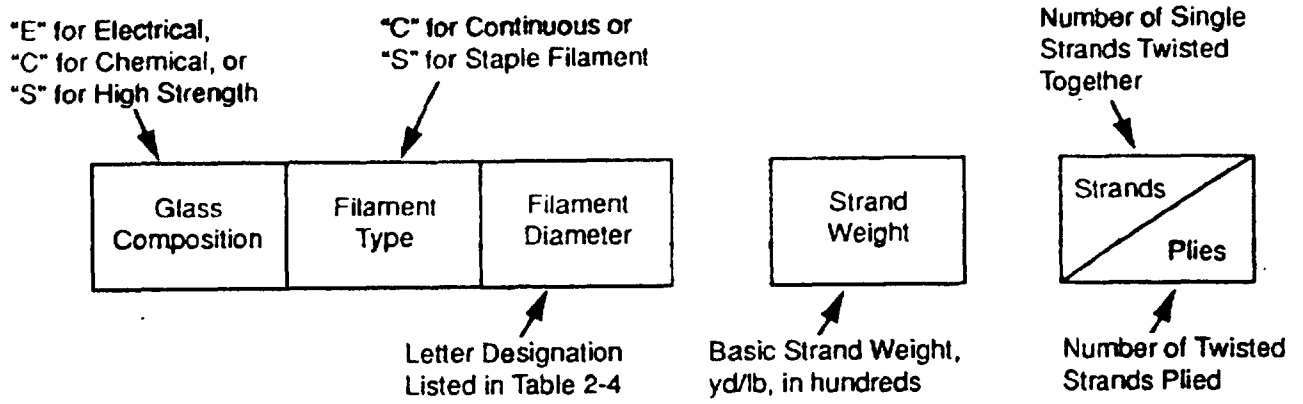

EXAMPLE: ECG 150 2/3 from Fig. 2-1

Figure 2-2. Yarn Nomenclature

2. "C" for continuous filament
3. "G" for filament diameter of 9.7 μm (0.00038 in.) from Table 2-4.
4. "150" for 15,000 yd/lb or 30,239 m/kg (nominal bare glass of basic strand)
5. "2/3" for three strands of yarn plied from two strands of filaments for a total of 6 strands.

2-4.2 YARN APPLICATIONS

Yarns are primarily used in woven fabric form, whereas continuous strands or rovings are used for filament winding and pultrusion. MIL-C-9084, *Cloth, Glass, Finished, for Resin Laminates*, contains listings of yarn constructions typically used for cloth that is used in the manufacture of resin-impregnated laminates.

2-5 WEAVING YARNS

Glass yarns commonly used for weaving are described in Table 2-6. Certain plied yarns are similar with respect to yield and theoretically can be interchanged. For example, similar yields are obtained with ECD 450 3/2, ECE 225 1/3, ECDE 150 1/2, ECG 150 1/2, and ECG 75 1/0 yarns. As can be seen, the finer the basic strand, the greater the number of singles required in the plied yarn.

The ECG 75 1/0 yarn does not require plying because the yield of the basic strand is sufficient for its use in the singles state. These yarns are used, for example, interchangeably in satin weave fabrics. The smaller the filament diameter, the greater the flexibility and cost of the fabric.

TABLE 2-6. CONTINUOUS FILAMENT GLASS YARN AND ROVINGS

YARN NO.	YIELD		MINIMUM BREAKING STRENGTH	
	m/kg	yd/lbm	N	lb
ECD 1800 1/0	355,600	176,400	1.1	0.25
ECD 1800 1/2	177,800	88,200	2.2	0.50
ECD 900 1/0	177,800	88,200	2.2	0.50
ECD 900 1/2	88,900	44,100	4.9	1.1
ECD 450 1/0	88,900	44,100	4.9	1.1
ECD 450 1/2	44,450	22,050	9.8	2.2
ECD 450 1/3	29,600	14,700	14.7	3.3
ECD 450 2/2	22,225	11,025	19.6	4.4
ECD 450 3/2	14,820	7,350	29.4	6.6
ECD 225 1/0	44,450	22,050	9.8	2.2
ECD 225 1/2	22,225	11,025	19.6	4.4
ECD 225 1/3	14,820	7,350	29.4	6.6
ECD 225 2/2	11,110	5,512	39.1	8.8
ECD 225 3/2	7,408	3,675	58.7	13.2
ECD 225 4/3	3,705	1,838	117.4	26.4
ECDE 150 1/0	29,600	14,700	13.3	3.0
ECDE 150 1/2	14,820	7,350	26.7	6.0
ECDE 150 2/2	7,408	3,675	53.4	12.0
ECG 150 1/0	29,600	14,700	13.3	3.0
ECG 150 1/2	14,820	7,350	26.7	6.0
ECG 150 1/3	9,878	4,900	40.0	9.0
ECG 150 2/2	7,408	3,675	53.4	12.0
ECG 150 3/2	4,939	2,450	80.1	18.0
ECG 150 4/2	3,703	1,837	106.8	24.0
ECG 150 3/3	3,292	1,633	120.1	27.0
ECG 150 4/3	2,469	1,225	160.1	36.0
ECG 150 4/4	1,853	919	213.5	48.0
ECG 75 1/0	14,820	7,350	26.7	6.0
ECG 75 1/2	7,408	3,675	53.4	12.0
ECG 75 1/3	4,939	2,450	80.1	18.0
ECG 75 2/2	3,703	1,837	106.8	24.0
ECG 75 3/2	2,469	1,225	160.1	36.0

2-5.1 WOVEN FABRICS

Typical glass fiber fabrics are made by interlacing warp (lengthwise) yarns and fill (crosswise) yarns on conventional textile looms (Ref. 7). There are seven basic design variables to be considered in selecting woven fabric reinforcement:

1. *Thickness.* Glass fabrics are available in thicknesses ranging from 0.025 to 1.27 mm (0.0010 to 0.0500 in.).

2. *Mass.* The areal mass densities range extends from less than 0.03 kg/m^2 (1 ozm/yd^2) to over 1.08 kg/m^2 (2 lbm/yd^2).

3. *Weave Pattern.* Almost any construction that can be made from any natural or synthetic yarn can be woven from glass yarns. However, for industrial purposes, there are six principal weave patterns. These patterns, shown in Fig. 2-3, are described as follows:

a. *Plain or Square.* This is the most common basic textile weave. One warp end (lengthwise thread) passes over and then under one filling pick (crosswise thread), and vice versa. This construction is the firmest and most stable of the industrial weaves. It allows fair porosity with minimum yarn slippage, it provides a uniform strength pattern in all surface directions, and it allows easy air removal in hand lay-up or molding. It does not, however, drape as well as some other weaves.

b. *Basket.* Two or more parallel warp threads pass over two or more filling yarns in a square or plain weave pattern. This weave is less stable than a plain weave. It is, however, more pliable than a plain weave and is flatter and stronger than an equivalent weight and count of plain weave.

c. *Twill.* This pattern is constructed with filling yarns passing over one and under the next several warp

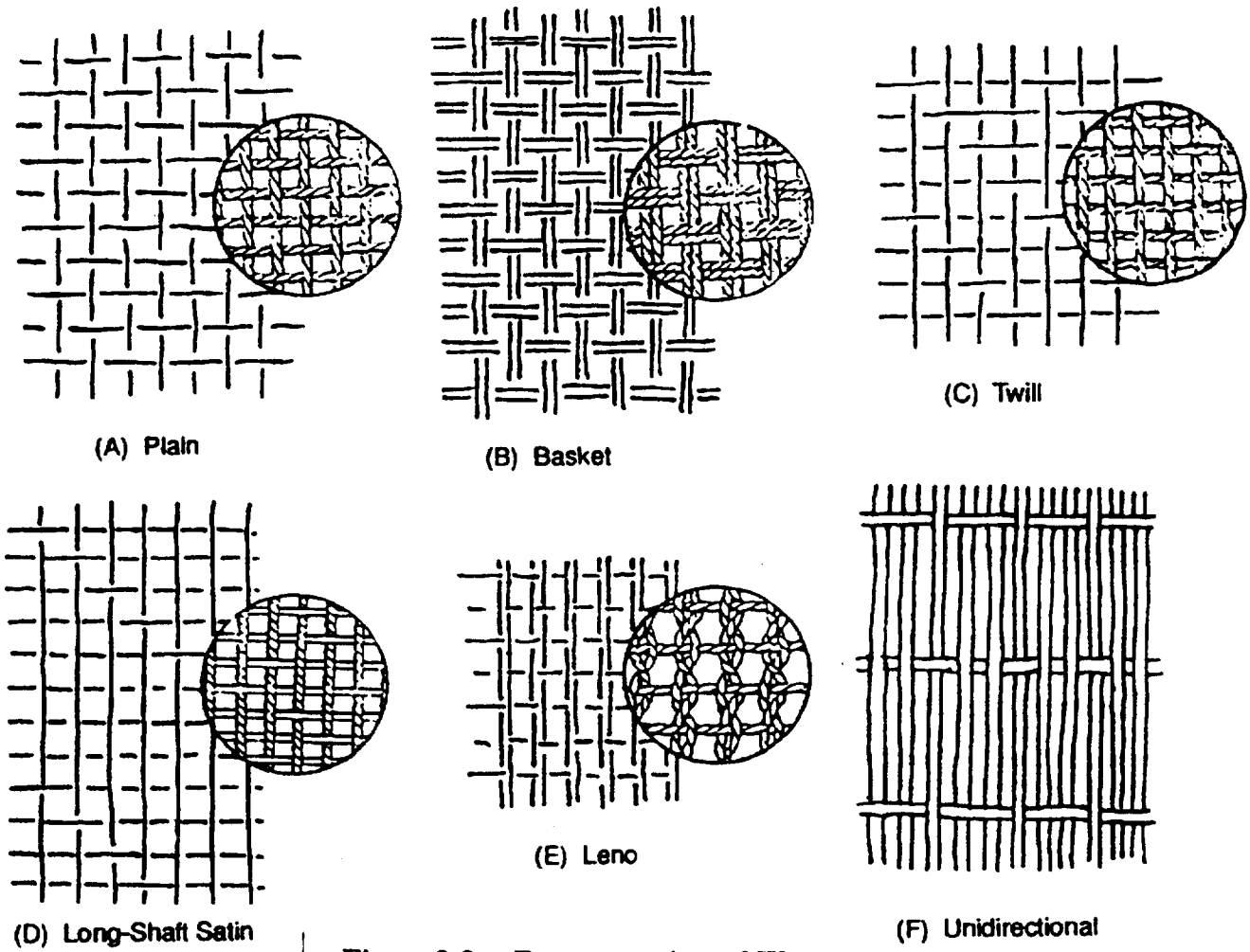

Figure 2-3. Representation of Weaves

yarns. This construction gives either a straight or broken diagonal line in the fabric. The weave has a greater number of yarns per unit area than a plain weave but does not sacrifice a great deal of fabric stability. It is more pliable than either a plain or a basket weave, it has better drapability than a plain weave, and it has better sewing characteristics than satin weaves.

d. *Long-Shaft Satin.* This is a warp yarn that passes over four or more yarns and under one filling yarn. It is the most pliable of weaves. Accordingly, it drapes easily over compound curves. It also can be closely woven and have high strength because of minimized yarn distortion. One example is 4-harness satin. This fabric is also identified as crowfoot satin because when laid out on cloth design paper, the weaving pattern resembles the imprint of a crow's foot. With this type of weave there is a 3 by 1 interlacing, i.e., a filling thread passes over the three warp threads and then under one. This type of fabric has a different appearance on one side from the other. These fabrics also provide higher counts than plain or basket weaves. Another example is 8-harness satin, with one warp yarn harness passing over seven fills and under one in a staggered array. Like the crowfoot weave, it also is different on one side from the other. This weave is more pliable than any of the others and is especially conformable to compound curves, such as on radomes.

e. *Leno.* In leno weave two or more parallel yarns alternately pass over and under one filling yarn and thereby lock it in place. Weaves can thus be made fairly open with minimal slippage of yarns. This characteristic leads to stability rather than pliability. Generally, fabrics are fairly thick and bind well to the resin matrix in a laminate. A mock leno is an open-type weave that resembles a leno and is constructed with a system of interlacings that draws a group of threads together and leaves a space between the two groups. The warp threads do not actually cross each other as in a real leno. Generally, this type of weave is used when (1) a high thread count is required for strength and (2) the fabric must remain porous.

f. *Unidirectional.* Most of the yarns run in the machine direction; there are just enough filling yarns to

hold the fabric together. This construction yields maximum strength in one direction with minimum distortion of the yarns when they pass over and under each other. Because the fibers are essentially straight, i.e., not kinked, the impact resistance of a laminate is usually high, especially when it is cross-laminated with additional layers. Reinforcing materials can be woven and knit into 3-dimensional and continuous shapes for reinforcing structural parts. Special techniques are required to accomplish this construction.

4. *Construction of Fiber Count.* This is the number of warp rovings and filling rovings per inch of fabric.

5. *Yarn Size.* A wide variety of yarn sizes is available, and the yarn size determines the weight and thickness of the fabric. For specific purposes, one yarn may be selected over another to yield fabric with certain performance characteristics.

6. *Twist.* Twist involves the number of turns per unit length of the yarn and is introduced to make the yarn weavable.

7. *Finish.* Most industrial applications require glass fabric to be used in conjunction with a matrix material. To improve compatibility with the other materials, a finish or after treatment is frequently applied to the fabric.

By using these variables, fabrics are designed for specific applications and with specific properties. Table 2-7 lists several fabric styles that are frequently used in structural application. A more complete listing is given in MIL-C-9084.

2-5.2 WOVEN TAPES

For those applications that require a narrow width fabric, a series of tapes are available. These tapes have a nominal average thickness of 0.254 mm (0.010 in.) in a plain weave construction of 18×18. Widths of 38.1, 50.8, 76.2, 101.6, and 152.4 mm (1.5, 2, 3, 4, and 6 in.) are available with a woven edge, either untreated or surface treated. Widths of 203.2 and 304.8 mm (8 and 12 in.) are available with a feathered edge and either untreated or surface treated. The mechanical properties of tapes are similar to those of the same style fabric.

2-6 WOVEN ROVING

Woven rovings are similar to woven fabrics except that they are heavier and thicker than fabrics because rovings are heavier than yarns. Woven rovings have an areal mass density of 0.08 kg/m^2 (2.5 ozm/yd^2) to 1.36 kg/m^2 (40 ozm/yd^2) and have thicknesses of 0.51 to 1.3 mm (0.02 to 0.05 in.).

A plain weave style is usually employed. However, special weaves have been developed to permit specific alignment of fibers and to eliminate the undulating configuration of the warp. Table 2-8 lists some woven roving styles of S-glass using finer, untwisted rovings. Most special weaves include the unidirectional styles. Woven rovings are normally used in hand lay-up fabrication techniques.

Table 2-9 gives the breaking strength of some woven rovings. The greater bulk of woven roving compared to

TABLE 2-7. TYPICAL CONSTRUCTION OF WOVEN FABRICS FOR STRUCTURAL APPLICATIONS

STYLE	COUNT	WARP YARN	FILL YARN	WEAVE	MASS PER UNIT LENGTH kg/m	MASS PER UNIT LENGTH ozm/yd
			E-GLASS			
104	60 × 52	ECD 900 1/0	ECD 1800 1/0	plain	0.019	0.60
120	60 × 58	ECD 450 1/2	ECD 450 1/2	crowfoot	0.098	3.16
143	49 × 30	ECE 225 3/2	ECD 450 1/2	4 HS*	0.276	8.9
1543	49 × 30	ECG 150 2/2	ECD 450 1/2	4 HS	0.291	9.4
7743	120 × 20	ECDE 75 1/0	ECG 150 1/0	8 HS**	0.316	10.2
181	57 × 54	ECE 225 1/3	ECE 225 1/3	8 HS	0.276	8.9
1581	57 × 54	ECG 150 1/2	ECG 150 1/2	8 HS	0.295	9.5
7781	57 × 54	ECDE 75 1/0	ECDE 75 1/0	8 HS	0.279	9.0
1582	60 × 56	ECG 150 1/3	ECG 150 1/3	8 HS	0.422	13.6
			S-GLASS			
1581	57 × 54	SCG 150 1/2	SCG 150 1/2	8 HS	0.269	8.67
1543	49 × 29	SCG 150 2/2	SCG 150 1/0	4 HS	0.272	8.78
151	48 × 44	SCG 150 1/2	SCG 150 1/2	5 HS	0.223	7.18
1201	60 × 58	SCD 450 1/2	SCD 450 1/2	crowfoot	—	—

*4 HS = 4 Harness Satin
**8 HS = 8 Harness Satin

TABLE 2-8. ZERO TWIST WOVEN ROVING FABRICS — S-TYPE GLASS

STYLE	COUNT	NOMINAL AREAL MASS DENSITY		YARNS		WEAVE
		kg/m²	ozm/yd²	WARP	FILL	
S-3409G	10 × 10.2	0.29	8.5	12SCG 150 1/0	10SCG 150 1/0	4 Shaft Twill
S-4409G	11 × 4.8	0.32	9.3	20SCG 150 1/0	4SCG 150 1/0	4 Shaft Crowfoot Satin
S-5412G	10 × 7.6	0.41	12.2	16SCG 150 1/0	20SCG 150 1/0	4 Shaft Twill
S-5415G	10 × 7.6	0.51	15.0	20SCG 150 1/0	26SCG 150 1/0	4 Shaft Twill
S-8018G	6 × 5.3	0.60	17.7	40SCG 150 1/0	40SCG 150 1/0	Plain

TABLE 2-9. WOVEN ROVINGS STRENGTH*

COUNT	YARN		AREAL MASS DENSITY		THICKNESS		BREAKING STRENGTH	
	WARP	FILL	kg/m²	ozm/yd²	mm	in.	kN/m	lb/in.
7 × 9	75s	Roving	0.61	18.0	0.762	0.030	123 × 103	700 × 590
5 × 8	75s	Roving	0.61	18.0	0.787	0.031	175 × 53	1000 × 300
4 × 8	75s	Roving	0.61	18.0	0.813	0.032	140 × 88	800 × 500
5 × 8	75s	Roving	0.81	24.0	0.965	0.038	175 × 140	1000 × 800
5 × 8	135s	Roving	0.81	24.0	0.965	0.038	175 × 140	1000 × 800
5 × 6	75s	Roving	1.02	30.0	1.244	0.049	175 × 210	1000 × 1200
5 × 8	75s	Roving	1.22	36.0	1.321	0.052	175 × 280	1000 × 1600

*All woven rovings are 1 × 2 Basket Weave, with two picks weaving as one. Thus a 5 × 8 count would appear to be a 5 × 4 count plain weave woven roving.

woven fabric permits faster laminate buildup. The presence of pretreatment on the woven roving provides excellent wet out, good mechanical properties, high wet-strength retention, and excellent resin bonding. Thus woven rovings reduce lay-up times and costs and contribute high strength.

Because woven-roving strengths are directionally oriented with warp and fill directions of the weave, they are often cross plied at 45 deg to eliminate this weakness and to provide a laminate with 43 to 50% glass.

2-7 NONWOVEN REINFORCEMENTS

Nonwoven materials are made by swirl-, random-, or parallel-aligned strands or rovings. The glass reinforcements are held together by mechanical "needling" or bound by B-staged adhesive resinous binders into tapes and mats.

These two types of reinforcements have somewhat different handling and molding characteristics. Needled mats are softer and more drapable than nonneedled mats because some fibers are vertically oriented. They are also superior where reinforcement conformability is required. Mats are available in widths from 0.1524 to 2.13 m (6 to 84 in.).

Nonwoven reinforcements are characterized by their type, style, and weight, and by the solubility of their binder. The binder may be either a high- or low-solubility type. Solubility designates the rate at which the binder dissolves in the liquid resin matrix. Reinforcing mats having a high solubility are used for wet hand lay-up applications in which rapid wet out and matching contours are required. Mats having low solubility are used in press molding or wherever the flow of liquid matrix resin may wash away or disrupt the strands and thus leave resin-rich areas.

2-8 CONTINUOUS STRAND SWIRL MAT

This mat is usually produced from L-filament diameter—13.97 to 15.24 μm (0.00055 to 0.00060 in.)—E-glass strands. The strand is drawn directly from a bushing and impinged on an oscillating baffle that directs the mat to a moving mesh-metal belt on which sizing and resinous treatments are added. Areal mass densities of 0.23 to 1.37 kg/m² (0.75 to 4.5 ozm/ft²) are normally available. Standard widths usually range from 0.91 to 1.37 m (36 to 54 in.). Swirl mat normally is used in matched-die molding where drape is required but is not sufficiently complex to require preforming.

2-8.1 PARALLEL STRAND MATS

There are several styles of parallel strand flat mats. These reinforcements are designed to furnish exceptionally high directional strength when stressed in a direction parallel to the fibers. Directional weaknesses can be overcome by orienting multiple layers of reinforcements.

Nonwoven unidirectional mats are manufactured from sized continuous parallel strands (usually G-filaments) or rovings, which are held together by a fine resin-impregnated woven cross strand. The unidirectional mat is satisfactory for flat and single-curvature laminate structures as well as for large-span compound curvatures.

2-8.2 DRUM-WOUND PARALLEL STRAND MATS

This type of mat is fabricated from glasses drawn directly from the furnace onto a 1.22-m (4-ft) diameter drum. Usually T- or U-diameter filaments are wound around the drum as the furnace reciprocates along the longitudinal axis of the drum. Resin-compatible sizes are applied directly to the newly formed strands, and when the appropriate thicknesses have been built up (3.2 to 6.4 mm (0.125 to 0.25 in.)), the mat is cut, laid on a horizontal panel, and further processed.

Variations in the described mat design are accomplished when the furnace is reciprocating at a 5- to 10-deg angle between layers of filaments and thus is producing diamond-like patterns. Two furnaces can also be used to provide differences in the angles between layers of filaments.

These thin mats treated with low-solubility binder have excellent drapability, good uniformity, and sufficient bulk to prevent resin-rich areas. However, because T- and U-fibers are used, they have poorer strengths than G-filament E-glass reinforcements.

2-8.3 SURFACING AND OVERLAY MATS

The purpose of these mats is to produce superior surface properties and appearance. To obtain such properties, very thin mats are used to produce resin-rich areas. The surface mat has a high resin-binder content and therefore is stiff and limited to simple shapes. An overlay mat has a low binder content, has good draping qualities, and is used primarily in matched-die molding. Neither type of mat provides any significant reinforcing or strength properties (Refs. 5 and 6).

2-9 SURFACE TREATMENTS

Continuous filament fiberglass requires surface treatment to provide ease of handling and good adhesion between the glass and plastic matrix. Surface treatments are categorized into two groups: sizings and finishes; each of which is described in the paragraphs that follow.

2-9.1 SIZINGS

A size is a surface treatment or coating applied to the glass filaments during the forming operation, and there are two types of sizes. The first is a complex temporary starch-oil formulation that is applied to protect the fibers and to hold the strands together during handling and weaving. These sizes usually contain chemicals, such as dextrinized-starch gum, hydrogenated vegetable oil, nonionic emulsifying agent, cationic lubricant, gelatin, and polyvinyl alcohol. This type of sizing is used only on stands for roving and yarn that will be subjected to twisting, plying, or weaving. This sizing is usually not compatible with resin systems and must be removed prior to composite fabrication. Removal is accomplished by heat cleaning at about 343°C (650°F) or higher. Once removed, the size must be replaced by a permanent finish to improve interfacial bonding of the resin to the glass surface and to protect the filament from moisture.

The second type of size is a chemical mixture—compatible with the resin system—composed of an organic film former, a coupling agent, and a lubricant. This type of sizing is intended for direct reinforced plastics applications. The coupling agent, generally a silane or chrome complex, provides good glass-to-resin adhesion. The lubricant protects the fibers from glass-to-glass abrasion, and the film former protects the glass fibers and bonds them in a strand.

2-9.2 FINISHES

Finishes are surface treatments applied to glass fiber after heat cleaning. The chemical treatment usually consists of a water- or solvent-diluted coupling agent of the chrome or silane types. In some instances, the heat cleaning and finishing are performed in one step.

A variety of finishes, as shown in Table 2-10, are available. They are designed to provide good interfacial adhesion of glass to the resin system and to protect the fibers and enhance fabric wet out.

Some of the finishes described in Table 2-10 are proprietary. In time some types may be dropped from production use or modified and then introduced under different designations.

One disadvantage to using fabric over other glass reinforcements is that up to 50% of the original glass strength can be lost by the heat cleaning process required prior to finishing.

TABLE 2-10. GLASS FABRIC FINISHES

FINISH	USE
111	This finish constitutes part removal of yarn size at a relatively low temperature at which some of the oils and starch volatilize and the remaining starch is carmelized, i.e., partially converted to a dark, tacky form. The fabric has a distinct tan color and a residual organic sizing in the range of 0.1 to 0.5%.
112	Almost all the organic sizing is burned off the fabric. The fabric is white and virtually pure glass. It is the intermediate finishing stage in the production of fabrics with chemical finishes that provides protection, resin compatibility, and high performance of laminates. Finish 112 is used, as is, in the production of silicone laminates for improved electrical properties.
112 Neutral pH	This finish is similar to 112 except that after heat cleaning, the fabric is washed in demineralized water to remove residual alkali. Such treatment improves the electrical performance of silicone laminates.
114 or Volan®	After heat cleaning (Finish 112), the fabric is saturated with a chrome complex or Volan®. Fabric with 114 finish is compatible with polyester resin.
Volan® A	Volan® is the most widely used finish with polyester, epoxy, and phenolic laminates in which good dry- and wet-strength properties are required. Methacrylate chromium chloride bonds to the cleaned glass surface through the oxygen group and gives a Cr-O-Si bond. In the reaction to the glass surface, chloride salts are formed, which are removed by washing during the treating process. The fabric is white and results in a light green laminate.
550	550 is designed to overcome the poor wet strength retention of Volan finishes. 550-finished fabrics are made into light green laminates and offer improved physical properties with both polyester and epoxy resin systems. Laminates made with 550 are characteristically transparent, which indicates more complete wet out.
514 Neutral pH	This finish is recommended for silicone laminates. It will not catalyze the prepreg (B-stage) resin and thus gives it stable shelf life. The fabric has been treated to remove any trace of alkali that could affect the cure of silicone resin.
516	This modification of the 111 finish has been particularly successful in melamine laminates in which minimum water absorption by the laminate is desired. This finish is also compatible with phenolic resins and gives high-strength laminates.
518	This clear finish designed for polyester laminates has good wetability and high-wet-strength retention. The finish contribues no color to the laminate.
545	545 produces clear polyester laminates and is good for ultraviolet curing. Fabric wets out well and has high mechanical properties with good wet-strength retention.
565	565 is a high-strength silane finish used with polyester and epoxy systems. It produces clear laminates with excellent mechanical properties and excellent wet-strength retention.
566	566 is a modified silane finish designed for the particular requirements of polyester surfboards. It has excellent clarity and impact resistance.
558	This silane (Z-6040) produces laminates with flexural and compressive strength and excellent resistance to measling and blistering in solder dip or etching solutions. Laminates have good clarity, high-wet-strength retention, and excellent electrical properties.

(cont'd on next page)

TABLE 2-10. (Cont'd)

FINISH	USE
585	585 is a thermally stable silane finish for both electrical and structural laminates subjected to elevated temperatures in epoxy systems. Relatively void-free laminates have good clarity and good mechanical strength after long exposure to moisture and elevated temperature. 585 also has excellent resistance to measling, blistering, and chemical attack. Fabric with 585 wets out very fast and has adequate shelf life.
589	This clear finish produces high-performance laminates with excellent properties and exceptional resistance to measling and blistering in solder dip or in etching solutions. Very low moisture absorption, very rapid and thorough wet out, and excellent wet-strength retention are characteristics of this finish. It is also used with high-temperature epoxies, melamine, phenolic, and polyimide systems.
A-1100	The fabric is heat cleaned (Finish 112) and saturated with an amine-type vinyl silane. It is used with epoxy, melamine, and phenolic resins and as a finish provides good high-temperature properties. A-1100 can be provided as a hard finish with a stiff hand or as a soft finish that is pliable and drapable. Laminates take on the color of the resin system.
Garan	Garan is a vinyl silane applied to 112-finished fabric. It is compatible with polyester resins and can be supplied as a hard or soft finish. Laminates take on the color of the resin systems.
901 (HTS) and 904	These epoxy-compatible treatments are applied to S-glass filaments at the bushing. They provide superior high-strength performance and improved laminate wet-strength retention. Finish 901 requires cold storage, Finish 904 is not temperature sensitive.
LHTS	LHTS is a series of epoxy-compatible treatments applied at the bushing to E-glass or S-glass filaments. They are similar to 901 and 904 in that they provide high-strength performance and improved wet-strength retention.

2-10 FIBERGLASS PREPREGS

Fiberglass prepregs are ready-to-use combinations of reinforcement and resin. The reinforcement in the form to be used is preimpregnated with the resin matrix under closely controlled conditions. The resin-impregnated reinforcement is advanced to the partly polymerized state, normally referred to as B-stage. The partially cured material is stored under controlled conditions for subsequent use and final cure.

All the available forms of fiberglass, i.e., roving, tapes, and fabric, are available in prepreg form. Prepreg suppliers provide a listing of the standard materials available, although all forms can be preimpregnated based on the specific requirement. The most commonly used resins are the epoxies, polyesters, and polyimides. Phenolic and silicones have also been used for specific applications, e.g., high-temperature and electrical applications, and generally have been limited to secondary structures.

Prepregs are usually packaged in clean polyethylene or polyester bags. These bags are purged with a dry gas and sealed before storage. Prior to use they are warmed to room temperature in the sealed bag. This practice prevents fiber breakage and moisture contamination.

In the packaged form prepregs have a limited shelf life of approximately six months at temperatures not exceeding -18° C (0° F). Working life at 18° to 27° C (65° to 80° F) at 70% relative humidity is approximately 14 days.

Prepregs have several advantages (Ref. 8) over the conventional process of applying the liquid resin matrix to the reinforcement at time of use. These advantages center on facilitating the production process in the following ways:

1. Prepregs can be produced on a production basis that leads to uniform impregnation and reliability of the reinforcement and resin combination.
2. Controlled resin to reinforcement yields more uniform products.
3. Production is simplified because prepregs are ready-to-use materials that permit ease of fabrication.
4. More rapid manufacture with the use of preformed shapes and tack properties to meet the need for handling in the production process by minimizing strand or fabric movement

5. Adaptability to automated mass production techniques by ability to preassemble a complete lay-up in advance of molding

6. Waste material is virtually eliminated by use of precut forms.

7. Better control of resin flow and gel time and with preestablished resin-reinforcement ratios.

2-11 FIBERGLASS SPECIFICATIONS

Table 2-11 lists the major specifications for fiberglass and related derived products.

TABLE 2-11. SPECIFICATIONS FOR GLASS FIBER AND DERIVED PRODUCTS

	MILITARY SPECIFICATIONS
1. MIL-F-46885(MI)	*Fabric, Glass, Phenolic-Resin-Impregnated*
2. MIL-F-47078(MI)	*Fabric, Glass, Epoxy-Resin-Impregnated*
3. MIL-F-47079(MI)	*Fabric, Glass, Silicone-Phenolic-(Phenylsilane) Impregnated*
4. MIL-G-46887(MI)	*Glass Roving, Resin*-Impregnated*
5. MIL-G-47024(MI)	*Glass Roving, Phenolic-Impregnated*
6. MIL-G-47296(MI)	*Glass Roving, Resin*-Impregnated*
7. MIL-G-55636B	*Glass Cloth, Resin**-Preimpregnated (B-Stage) (For Multilayer Printed Wiring Boards)*
8. MIL-M-46861(2)(MI)	*Molding Material, Glass Mat, Epoxy-Coated*
9. MIL-P-17549C(SHIPS)	*Plastic† Laminates, Fibrous Glass-Reinforced Marine Structural*
10. MIL-P-23943(AS)	*Plastic Molding Compound, Glass Fiber-Reinforced Phenolic Resin, Thermosetting*
11. MIL-P-25395A(ASG)	*Plastic Material, Heat Resistant, Low-Pressure Laminated Glass Fiber Base, Polyester Resin*
12. MIL-P-25421B	*Plastic Materials, Glass Fiber Base—Epoxy Resin, Low-Pressure Laminated*
13. MIL-P-25515C	*Plastic Materials, Phenolic Resin, Glass Fiber Base, Laminated*
14. MIL-P-25518A(ASG)	*Plastic Materials, Silicone Resin, Glass Fiber Base, Low-Pressure Laminated*
15. MIL-P-43038B(MR)	*Plastic Molding Material, Polyester, Low-Pressure Laminate, High-Temperature Resistant*
16. MIL-P-82540(OS)	*Plastic Materials, Polyester Resin, Glass Fiber Base, Filament-Wound Tube*
17. MIL-R-60346B	*Roving, Glass, Fibrous (For Filament Winding Applications)*
	AEROSPACE MATERIAL SPECIFICATIONS
1. AMS 3821,	*Cloth, Type E-Glass, B-Stage Epoxy-Resin-Impregnated 181 Style Fabric, Self-Extinguishing*
2. AMS 3822	*Cloth, Type E-Glass, B-Stage Epoxy-Resin-Impregnated, Style 181-75DE*
3. AMS 3823B	*Fabric, Glass Cloth Style 7781, Chrome-Silane Finish*
4. AMS 3824	*Cloth, Type E-Glass, Finished for Resin Laminates*
5. AMS 3825	*Fabric, Glass (181) (Chrome-Treated)*
6. AMS 3826	*Cloth Type E-Glass, B-Stage Polyester-Resin-Impregnated*
7. AMS 3827	*Cloth, Type E-Glass, B-Stage Polyester-Resin-Impregnated 181 Style Fabric, Self-Extinguishing*
8. AMS 3828	*Glass Roving, Epoxy-Resin-Preimpregnated-Type E-Glass*
9. AMS 3832	*Glass Roving, Epoxy-Resin-Impregnated-Type S-Glass*
10. AMS 3837	*Cloth, Type S-Glass, 181 Style Fabric, Finish No. HTS-904*
11. AMS 3845	*Cloth, Type E-Glass, B-Stage Addition-Cure Polyimide-Resin-Impreganted*
12. AMS 3845/1	*Cloth, Type E-Glass, B-Stage Polyimide-Resin-Impregnated 181 Style Fabric, Low-Flow Addition Cure Resin for Press Cure 40-100 psi (276-690 kPa) or Vacuum/Autoclave Processing*

*Epoxy
**Epoxy or polyimide
†Polyester

(cont'd on next page)

TABLE 2-11. (Cont'd)

13. AMS 3845/2	*Cloth, Type E-Glass, B-Stage Polyimide-Resin-Impregnated 181 Style Fabric, High-Flow Addition Cure Resin for Press Cure 40-100 psi (276-690 kPa) for Vacuum/Autoclave Processing*
14. AMS 3906	*Glass Nonwoven Fiber and Flat Sheet, Epoxy-Resin-Impregnated, for Hand and Machine Lay-Up*
15. AMS 3906/1	*Glass Nonwoven Fiber Tape and Flat Sheet, Epoxy-Resin-Impregnated, for Hand and Machine Lay-Up GL-I-36-250(121)*
16. AMS 3906/2	*Glass Nonwoven Fiber Tape and Flat Sheet, Epoxy-Resin-Impregnated, for Hand and Machine Lay-Up, GL-III-36-250(121)*
17. AMS 3906/3	*Glass Nonwoven Fiber Tape and Flat Sheet, Epoxy-Resin-Impregnated, for Hand and Machine Lay-Up GL-I-26-300(149)*
18. AMS 3906/4	*Glass Nonwoven Fiber Tape and Flat Sheet, Epoxy-Resin-Impregnated, for Hand and Machine Lay-Up GL-III-26-300(149)*
19. AMS 3906/5	*Glass Nonwoven Fiber Tape and Flat Sheet, Epoxy-Resin-Impregnated, for Hand and Machine Lay-Up GL-I-36-300(149)*
20. AMS 3906/6	*Glass Nonwoven Fiber Tape and Flat Sheet, Epoxy-Resin-Impregnated, for Hand and Machine Lay-Up GL-I-36-200(93)*
21. AMS 3906/7	*Glass Nonwoven Fiber Tape and Flat Sheet, Epoxy-Resin-Impregnated, for Hand and Machine Lay-Up GL-III-33-200(93)*

AMERICAN SOCIETY FOR TESTING AND MATERIALS SPECIFICATIONS

1. ASTM D2150-70	*Woven Roving Glass Fabric for Polyester-Glass Laminates*
2. ASTM D2408-67	*Woven Glass Fabric, Cleaned and After-Finished With Amino-Silane Type Finishes, for Plastic Laminates*
3. ASTM D2410-67	*Woven Glass Fabric, Cleaned and After-Finished With Chrome Complexes for Plastic Laminates.*

REFERENCES

1. S. S. Oleesky and J. G. Mohr, *SPI Handbook of Reinforced Plastics*, 1st Ed., Van Nostrand Reinhold Co., New York, NY, 1964.
2. J. G. Mohr, "Fiberglass", *Handbook of Fillers and Reinforcements for Plastics*, Van Nostrand Reinhold Co., New York, NY, 1978, pp. 467-503.
3. J. F. Dockum, Jr., "Fiberglass", *Handbook of Reinforcements for Plastics*, Van Nostrand Reinhold Co., New York, NY, 1987, pp. 233-86.
4. R. E. Lowrie, "Glass Fibers for High-Strength Composites", *Modern Composite Materials*, Addison-Wesley Publishing Co., Reading, MA, 1967, pp. 270-323.
5. R. M. McMarlin, R. L. Tedi, and F. M. Veazu, *High-Strength, High-Modulus Glass Fibers*, AFML-TR-65-90, Part 1, Air Force Materials Laboratory, Wright-Patterson Air Force Base, OH, March 1965.
6. K. L. Loervenstein, *The Manufacturing Technology of Continuous Filament Glass Fibers*, Elsevier Scientific Publishing, New York, NY, 1973.
7. Mauro DiDomencio, Jr., "Wires of Glass", *Industrial Research*, 50 (August 1974).
8. G. Lubin, Ed., *Handbook of Fiberglass and Advanced Plastics Composites*, Van Nostrand Reinhold Co., New York, NY, 1969, pp. 423, 427.

CHAPTER 3
CONTINUOUS NONGLASS REINFORCEMENTS: CARBON-GRAPHITE, ARAMID, AND BORON FIBERS

Various properties and other aspects of high-performance fibers are given. These fibers are the carbon-graphites, organic-based aramids, and boron. Comparisons with fiberglass fibers are made.

3-1 BACKGROUND

Fiberglass is the most widely used reinforcement for structural plastics. Special end applications require the use of fibers with higher elastic moduli and/or higher strengths. A weight lower than that provided by glass fibers is often needed. For these applications, e.g., advanced components in aircraft and spacecraft, high-performance fibers are used (Refs. 1 and 2). Although costs in materials and fabrication are significantly increased, enhanced capabilities in these special end-items or systems can justify such expenditures.

The high-performance fibers are the carbon-graphites; organic-based aramids, i.e., aromatic amides or nylons; and boron. A comparison of the density and tensile properties of these fibers with fiberglass is shown in Table 3-1.

Like fiberglass, the high-performance fibers are tough and nonductile. Their stress-strain reactions are linear practically to failure with limited, if any, yielding. Aramid fibers in compression are an exception to the behavior; they buckle readily. The toughness of composites using high-performance fibers is good but depends upon the interaction of adjacent fibers and the resin matrix to distribute stresses in order to avoid propagation of fracture when a given fiber breaks.

The high-performance fibers are more costly than fiberglass and at inception are normally priced in the hundreds of dollars per pound. In the early 1970s carbon-graphite fibers cost from $220 to $1100 per kilogram ($100 to $500 per pound), aramid fibers $110 per kilogram ($50 per pound), and boron approximately $660 per kilogram ($300 per pound). These prices have dropped significantly with the exception of boron, which retains its high price. Fiber cost is directly related to fiber production and also is directly related to end use application where carbon-graphite and the aramid fibers have been heavily employed. These prices are all significantly higher than fiberglass, which remains the most used fiber.

3-2 CARBON-GRAPHITE FIBERS

The terms carbon and graphite filaments (or fibers) are sometimes used interchangeably. Technically, carbon

TABLE 3-1. COMPARISON OF FIBER PROPERTIES*

TYPE OF FIBER	SPECIFIC GRAVITY	MASS DENSITY		TENSILE STRENGTH		TENSILE MODULUS	
		kg/m^3	lbm/in^3	MPa	ksi	GPa	10^6 psi
Glass:							
a. E monofilament	2.54	2547	0.092	3447	500	72	10.5
b. E 12-end roving	2.54	2547	0.092	2565	372	72	10.5
c. S monofilament	2.48	2491	0.090	4585	665	85	12.4
d. S 12-end roving	2.48	2491	0.090	3792	550	85	12.4
Carbon-Graphite:							
a. High-strength	1.80	1799	0.065	2758	400	262	38
b. High-modulus	1.94	1938	0.070	2068	300	379	55
c. Intermediate high-modulus	1.74	1744	0.063	2482	360	186	27
Aramid	1.44	1439	0.052	2758	400	124	18
Boron:							
Tungsten substrate	2.63	2630	0.095	3447	500	400	58

*The values listed are nominal and are provided for general comparison.

fibers are those with a carbon content of 92 to 99% and a modulus below 345 GPa (50×10^6 psi). Graphite filaments are those with a 99% carbon content, a modulus over 345 GPa (50×10^6 psi), and a higher crystallinity or graphite structure. This discussion treats carbon and graphite as one reinforcement category, termed carbon-graphite filaments or fibers*, except for those cases in which the manufacturer uses either carbon fiber or graphite as a specific designation in his literature.

3-2.1 CONTINUOUS CARBON-GRAPHITE FIBERS: PRODUCT AVAILABILITY

Carbon-graphite fibers show light weight, high strength, and high stiffness. The high modulus and, to a lesser extent, the high strength are a function of the degree of structural orientation. This orientation refers to the degree to which carbon layer planes are oriented parallel to the fiber axis.

All carbon-graphite fibers are made by pyrolysis of organic precursor fibers in an inert atmosphere (Ref. 3). Process temperatures may range from 1000° to 3000°C (1832° to 5432°F). Higher temperatures yield higher modulus fibers. Only three precursor materials—rayon, polyacrylonitrile (PAN), and pitch—have had importance in production of carbon-graphite fibers. Rayon was first used in producing such fibers. Rayon-derived fibers achieved their high strength and modulus by stretching to several times their original room temperature length at 2000°C (3632°F) or higher. Because of the high cost of stretching and the uncertainty about a continued supply of special rayon precursors, rayon-based carbon-graphite fibers are slowly disappearing from the market. However, rayon-based carbon cloth, which is not hot stretched, continues to be used in aerospace applications.

A second generation of fibers is based on the PAN precursor. This fiber has the greatest market due to relatively low production costs and good properties. The tensile strength for this type of fiber ranges from 2413 to 3103 MPa (350,000 to 450,000 psi), and tensile modulus ranges from 240 to 290 GPa (35 to 42×10^6 psi). Developments have led to PAN-based fibers of higher moduli, i.e., from 345 to 552 GPa (50 to 80×10^6 psi) for high modulus grades and 689 to 862 GPa (100 to 125×10^6 psi) for ultrahigh modulus grades.

PAN-based fibers are available as yarns containing approximately 1000 to 12,000 filaments and tows of up to 100,000 or more filaments. Prices have dropped from $440 per kilogram ($200 or more per pound) in 1969 to about $44-$110 per kilogram ($20-$50 per pound) in the 1980s. The yarns of lower filament count (1000 to 6000 fibers) can also be woven into fabrics for manufacture of composites. The costs of the high modulus and ultrahigh modulus are much higher than those of the standard grades.

The third generation fiber is based on a pitch precursor. Common pitch is an isotropic mixture of mostly aromatic compound. Fibers spun from pitch have marginal orientation and thus lower strength and modulus. They are, however, also lower in cost. Carbon fibers can be made from a type of pitch that is first converted to a mesophase or liquid crystal. The fiber has a tensile strength of 2068 MPa (300×10^3 psi) or more and a modulus of 379 GPa (55×10^6 psi) or more. These fibers are available as 1000- and 2000-filament yarns and in different cloth constructions.

3-2.2 CARBON-GRAPHITE FIBER MANUFACTURE

Continuous carbon-graphite filaments are produced by the pyrolytic degradation, under controlled conditions, of organic precursors, such as PAN, rayon, other synthetics, and pitch (Ref. 4).

The carbon-graphite fibers available today fall into four categories: high strength, ultrahigh modulus, high modulus, and intermediate high modulus; all of which are governed by the selection of material and process parameters. In general, there are two ways to produce high-modulus carbon-graphite fibers: (1) use a highly oriented polymer fiber that gives an oriented graphitic structure upon decomposition and (2) strain anneal an unoriented carbon fiber at a high temperature. The first process is typically applicable to PAN; the second process is applicable to rayon and pitch fibers.

PAN is a large market volume fiber that produces a good carbon fiber yield through pyrolysis. PAN also has the advantage that high-modulus carbon-graphite fibers can be made by simple heat treatment of the prestretched (oriented) PAN fiber. The manufacturing processes vary, but, in general, they consist of stretching the precursor fiber prior to or during oxidation at about 220°C (428°F) followed by a heat treatment (graphitization) to a temperature in the range of 1000° to 2500°C (1832° to 4532°F).

Initial stretching of the PAN helps to increase the axial alignment of the polymer molecules. During the stretching of the linear molecules, some rotation of the nitrile cyanide units occurs about the linear backbone. The stretching of PAN places the cyanide units in close proximity so that they can more readily participate in the cyclization or formation of a ladder polymer that develops during the subsequent stabilization stage. During stabilization, the fibers must be kept under tension to maintain the alignment of the PAN polymer while it transforms to a ladder polymer; otherwise, relaxation occurs and the resulting ladder polymer is disoriented with respect to the fiber axis.

*Carbon-graphite fiber is a generic designation describing filaments primarily carbonaceous in finished form. Carbon microstructures exist when heating or processing is held below certain temperatures. At higher treatment temperatures a level of graphite microstructures appears.

When PAN is heated in the range of 250° to 300°C (482° to 572°F), an exotherm (from ladder polymer formation) occurs at about 280°C (536°F). Enough heat is evolved to result in fusion of the polymer and loss of orientation. Fusion can be reduced by the use of a very slow rate of heating through the initial temperature range used to produce the oriented ladder polymer. High-modulus fibers have been prepared by this means. Also stabilization can be achieved quickly by oxidation at 220°C (428°F) or slightly above. Stabilization at this temperature permits the formation of the oriented ladder polymer and reduces the intensity of the exotherm reaction (Ref. 5).

After stabilization the precursor has an oriented cyclic or ladder structure with a high enough glass transition temperature that it is not necessary to continue to maintain tension. Considerable nitrogen and hydrogen are still present in the rings that form the basic units of the polymer, but these elements are eliminated from the structure during the carbonization stage by heating to 1000°C (1832°F). The carbon atoms that remain are principally in the form of extended hexagonal ribbon networks. These ribbon networks tend toward alignment with the fiber axis; their degree of ordering relative to each other and the fiber axis is comparatively low. The effect of the carbonization stage is to produce fibers of low strength and modulus. As the heat treatment temperature is increased, the structure exists of highly tangled, long ribbons of graphite that are perhaps 30 angstroms wide and thick. With further heat treatment the tangling decreases and the ribbon size increases to a width and depth of several hundred angstroms and length is micrometres long.

Commercially prepared fibers are generally not fully stabilized. They have a more complex macrostructure, and the outer surfaces show the onionskin structure. The onionskin structure results in a high residual stress upon cool down, which decreases the coupling between ribbons and causes lower tensile strengths.

Rayon and pitch fibers are processed into carbon-graphite fibers that consist of intertwined ribbons. There is no preferred orientation; simple heat treatment does not give any surface texture. Desired orientation is attained by loading the filament at a temperature high enough to allow rapid diffusion of carbon formation. The carbon fiber is stretched to strains from 60 to 100% to obtain high modulus. This process can be applied to any fibers with adequate strength; however, the high temperature needed for the strain anneal is a disadvantage.

Although the general structural feature of intertwined ribbons is common to all forms, the details of the orientation of these ribbons are important. With the present commercial fibers, an increase in modulus is associated with a decrease in tensile strain and shear strength. These properties are not necessarily related, but improved fibers will require careful control of the radial, as well as the axial, preferred orientation.

Lower cost carbon-graphite filaments are being produced from pitch, a by-product of the petroleum or coal-coking industries. The pitch type of filament also has poorer fiber-matrix adhesion than the other yarns and thus has lower shear strength properties (Ref. 6).

The cross-sectional shapes of carbon-graphite filaments vary with the precursor. Fibers produced from PAN and pitch have circular cross sections, whereas those from rayon are irregular or crenulated. PAN and pitch fiber diameters range from 6.9 to 8.9 μm (0.00027 to 0.00035 in.).

Carbon-graphite fibers are surface treated to improve their somewhat poor interlaminar shear strength. Such treatments usually involve surface oxidation or halogenation.

Carbon-graphite fiber technology has been in a stage of competitive development, and some changes in characteristics may occur. Presently the majority of products use the PAN-precursor-type filaments.

3-2.3 CARBON-GRAPHITE FIBER FORMS

Continuous graphite fibers are available from a number of producers in a variety of forms, conditions, and types (Refs. 7 and 8). A list of the domestic suppliers and basic fiber characteristics is given in Table 3-2. The PAN-type fiber is the most widely produced for composite structures. The three principal forms available are uniaxial tows or yarns, woven fabrics, and nonwoven fabrics (Ref. 9). These forms are commonly provided in preimpregnated form for ease of manufacture.

3-2.3.1 Tows and Yarns

Tows are available containing from 1000 to 160,000 filaments. A tow is made of a number of continuous fibers bundled together with not more than two twists per foot. The tows are sized, finished, or surface treated for mechanical handling, abrasion resistance, and compatibility with either epoxy, polyester, or polyimide resin systems. The ultrahigh-modulus graphite fibers are more fragile and more difficult to handle than the high-strength or intermediate high-modulus materials.

Yarns consist of a number of continuous fibers twisted together with one or more twists per inch. Yarns contain two or more plies twisted in the opposite direction of the final yarn. Normally, the yarn and plies contain approximately the same number of twists per inch. Yarns with the appropriate finishes and containing from 400 to 12,000 filaments are available for weaving.

For military use yarns and tows are classified according to their minimum, single-fiber tensile modulus of elasticity and minimum, average single-fiber tensile strength. Four modulus types, from 172 to 586 GPa (25×10^6 to 85×10^6

TABLE 3-2. CARBON-GRAPHITE FIBER MANUFACTURERS AND CHARACTERISTICS*

MANUFACTURER	PRECURSOR	TRADE NAME	DENSITY		FIBER DIAMETER	
			g/cm^3	$lbm/in.^3$	10^{-6} m	10^{-3} in.
Amoco, Inc. (Amoco Performance Products Division)	PAN	Thornel T	1.77	0.064	6.9	0.27
	Pitch	Thornel P	2.16	0.078	10.2	0.4
Armco Inc. (Hitco Materials Division)	PAN	Hi-Tex	1.77	0.064	—	—
AVCO Corporation (AVCO Specialty Materials Division)	PAN	Avcarb	1.74	0.063	7.9	0.31
BASF Structural Materials, Inc.	PAN	Celion	1.94	0.070	7.6	0.30
Great Lakes Carbon Corporation	PAN	Fortafil	1.77	0.064	7.4	0.29
Hercules, Inc.	PAN	Magnamite	1.80	0.065	8.1	0.32
Stackpole Fiber Company	PAN	Panex	1.74	0.063	7.6	0.30

*The values listed are nominal and provided for general comparison.

psi), are categorized in MIL-Y-83371**. Tensile strengths are categorized by class, i.e., from 1380 to 3105 MPa (200×10^3 to 450×10^3 psi). The minimum modulus of graphite yarns and tows is designated at 95% of the single-fiber modulus. Table 3-3 presents the characteristics of some available yarns and tows.

3-2.3.2 Woven Fabrics

Carbon-graphite fibers are available in woven form in a wide variety of weaves, as shown in Fig. 2-3. The weaves offer versatile warp-to-fill ratios and construction of weaves. The most commonly used weaves are the plain and satin weaves. In the plain weave the warp and fill threads cross alternately. Plain weaves are generally the least pliable, but they are also the most stable. This stability permits the fabrics to be woven with a minimum of porousness or resin bleed through.

The satin weave is one of the basic weave structures in which the interface pattern of the fill threads with the warp threads is alternated only at widely spaced intervals. The satin weave structure is categorized into 4- (or crowfoot), 5-, 8-, and 10-harness satin weaves. Satin weaves are more pliable than the plain weaves and are especially adaptable to compound curves, such as radomes. Table 3-4 describes common carbon-graphite fabric weaves.

Carbon-graphite yarns can be woven into other forms, e.g., basket weaves, and with other types of yarns to form hybrids. Use of this versatility provides the designer with a wide latitude in custom-tailoring strength, stiffness, and other properties to meet structural design criteria.

**MIL-Y-83371(USAF), *Yarns, Graphite, High-Modulus, Continuous Filament*, 5 May 1972.

TABLE 3-3. PROPERTIES OF CARBON-GRAPHITE TOWS AND YARNS

MANUFACTURER	TRADE NAME	TENSILE STRENGTH MPa	TENSILE STRENGTH ksi	ULTIMATE STRAIN, %	ELASTIC MODULUS GPa	ELASTIC MODULUS 10^6 psi
AVCO Corporation	Avcarb G-160	2930	425	—	221	32
BASF Structural Materials, Inc.	Celion GY70	1862	270	0.36	517	75
	Celion G30-500	3792	550	1.62	234	34
Great Lakes Carbon Corporation	Fortafil F-5	3103	450	—	345	50
	Fortafil F-3	2758	400	—	228	33
Hercules, Inc.	Magnamite AS1	3103	450	1.3	228	33
	Magnamite AS4	3999	580	1.6	234	34
	Magnamite HMS	2758	400	0.8	331	48
Armco, Inc.	Hi-Tex 3000	3241	470	—	228	33
	Hi-Tex 3000HS	3689	535	—	234	34
Stackpole Fiber Company	Panex 30C	2620	380	—	221	32
Amoco, Inc.	Thornel T 300	3654	530	1.4	228	33
	Thornel P55S	1896	275	0.5	379	55
	Thornel P75S	2068	300	0.4	517	75

TABLE 3-4. GRAPHITE FABRIC WEAVES AND CONSTRUCTION

WEAVE	THICKNESS mm	THICKNESS (in.)	CURED PLY THICKNESS mm	CURED PLY THICKNESS (in.)	MASS AREAL DENSITY kg/m²	MASS AREAL DENSITY (ozm/yd²)	WIDTH m	WIDTH (in.)	YARN COUNT (warp × fill)	FILAMENTS PER PLY Warp	FILAMENTS PER PLY Fill
8-harness satin	0.58	(0.023)	0.33	(0.013)	0.37	(11.0)	1.07	(42)	24 × 23	3000	3000
Plain	0.33	(0.013)	0.18	(0.007)	0.19	(5.5)	1.07	(42)	12 × 12	1000	1000
12-harness satin	0.38	(0.015)	0.20	(0.008)	0.24	(7.2)	1.07	(42)	48 × 48	1000	1000
5-harness satin	0.23	(0.009)	0.11	(0.0045)	0.12	(3.6)	1.07	(42)	24 × 24	1000	1000
Crowfoot satin	0.38	(0.015)	0.20	(0.0078)	0.22	(6.4)	1.07	(42)	24 × 12	3000	3000
Crowfoot	0.46	(0.018)	0.25	(0.0098)	0.28	(8.2)	1.07	(42)	24 × 12	3000	3000
Plain	0.97	(0.038)	0.64	(0.025)	0.70	(20.5)	1.07	(42)	4 × 6	20,000	20,000
5-harness satin	0.36	(0.014)	0.22	(0.0087)	0.24	(7.2)	1.07	(42)	24 × 24	1000	3000
8-harness satin	0.48	(0.019)	0.30	(0.0012)	0.36	(10.5)	1.07	(42)	20 × 18	3000	3000
Double crowfoot	0.66	(0.026)	0.43	(0.017)	0.47	(14.0)	0.91	(36)	15 × 16	6000	6000
8-harness satin	0.64	(0.025)	0.43	(0.017)	0.47	(14.0)	0.91	(36)	15 × 16	6000	6000

3-2.3.3 Nonwoven Fabrics

High-modulus continuous fiber mats made from pitch precursor are available from Amoco Performance Products, Inc. The Amoco Thornel Mat Grade VMA filaments produce a mat about 10.16 mm (0.4 in.) thick. Carbon-graphite mats are used often as surface veils in sheet molding compounds and composites to provide surfaces suitable for electrostatic coating and resistance heating because of their low electrical resistance and high thermal conductivity. Some properties are given in Table 3-5 for a mat made of Thornel.

3-2.3.4 Prepregs

Like the fiberglass reinforcements, carbon-graphite reinforcements are commercially available as prepregs. They are impregnated with epoxy, polyimide, phenolic, and polyester resins as uncured binders and are applied to the various forms of carbon-graphite fibers. Unidirectional continuous fiber prepreg tape is supplied commonly in rolls with a typical width of 76 mm (3 in.). The tape is a nonwoven, unidirectional bundle of filaments or tows wound on a spool interleaved with release paper. Also available are larger and smaller widths and a range of single-ply prepreg sheets, packaged flat in sizes up to 1524 mm (60 in.) wide. Preimpregnated fabrics are widely used and are also coupled with other preimpregnated reinforcements to form hybrid constructions.

When cured, carbon-graphite prepregs are categorized by maximum temperature capability, modulus of elasticity, and tensile strength. Because carbon-graphite fibers have high temperature resistance, the useful temperature range is determined by the selected resin matrix. The modulus and strength properties are related to the reinforcement and fiber surface treatment.

The shelf life of prepregs is resin dependent and is limited to approximately six months at temperatures not exceeding −18° C (0° F). Working life at 18° to 27° C (65° to 80° F) and 70% relative humidity is approximately 14 days.

TABLE 3-5. TYPICAL PROPERTIES OF THORNEL MAT GRADE VMA (PITCH PRECURSOR)

PROPERTY	VALUES
Weight/unit area, g/m^2 (ozm/yd^2)	644 (19)
Thickness, mm (in.)	25 (1)
Width, mm (in.)	521 (20.5)
Tensile strength, width, N/m (lb/in.)	
Longitudinal	140 (0.8)
Transverse	140 (0.8)

MIL-G-83410* is a characteristic specification for multifilament, preimpregnated graphite tow and yarn. The tapes or sheets are used for low-pressure fabricated laminates. These laminates are used in aircraft or aerospace structures or in assemblies for which high stiffness and high strength-to-weight ratios are needed. The specification classifies the prepreg on the basis of heat resistance and mechanical properties by type and class, respectively.

The MIL-G-83410 designations are as follows:

1. Type:
   a. Type I. General-purpose use to 93° C (200° F)
   b. Type II. Heat-resistant use to 177° C (350° F)
   c. Type III. Heat-resistant use to 216° C (420° F)
2. Class:
   a. Class A. 379 GPa (55×10^6 psi) modulus of elasticity nominal; 1724 MPa (250×10^3 psi) tensile strength minimal (filament properties)
   b. Class B. 517 GPa (75×10^6 psi) modulus of elasticity nominal; 1862 MPa (270×10^3 psi) tensile strength minimal (filament properties)
   c. Class C. 2068 MPa (300×10^3 psi) tensile strength minimal; 172 GPa (25×10^6 psi) modulus minimal (filament properties)
   d. Class D. 2758 MPa (400×10^3 psi) tensile strength minimal; 193 GPa (28×10^6 psi) modulus minimal (filament properties).

Nominal designation means ±34.5 GPa (±5×10^6 psi). The uncured resin must meet specific properties or characteristics for noncorrosiveness to metal, tack level, flow, volatiles, and resin content. The graphite fiber must conform to MIL-Y-83371**. Splices in the yarn are minimized according to the specific requirements. The uncured prepreg must meet specifications for impregnation quality, shelf life, width, and length. The cured product must meet requirements for ply thickness, fiber volume, void content, density, tensile strength and modulus, compressive strength and modulus, flexural strength and modulus, and short beam shear strength.

Table 3-6 gives the characteristics of several prepreg tapes and fabrics from one supplier. Manufacturers produce many variants of resin-impregnated carbon-graphite fibers and fabrics. The cured composite properties can be degraded if the uncured prepreg is contaminated by grease, dirt, or other incompatible materials or is improperly stored prior to use.

*MIL-G-83410(USAF), *Graphite Fiber Resin Impregnated Tape and Sheet for Hand Lay-Up*, 25 November 1988.
**MIL-Y-83371(USAF), *Yarns, Graphite, High-Modulus, Continuous Filament*, 5 May 1972.

TABLE 3-6. GENERAL DATA ON MAGNAMITE* GRAPHITE PREPREGS

CHARACTERISTIC	RESIN DESIGNATION		
	3501-5A	1655	3501-5A
Resin type	Epoxy	Polyester	Epoxy
Fabric	Tape	Tape	8H Satin
Fiber	AS1/AS4/HMS**	AS4	A370-8H
Width, cm (in.)	7.6-152 (3-60)	30.5 (12)	99-152 (39-60)
Cured ply thickness, mm (in.)	0.13 (0.005)	0.11 (0.0043)	0.34 (0.0134)
Cure temperature, °C (°F)	177 (350)	149 (300)	177 (350)
Resin content, %	35-42	37	35-42
Gel time at 135°C (275°F), min	35	—	35
Volatiles, wt %	1 max	1 max	1 max
Tack time, min	30 min	—	30 min
Storage life, months			
@ 16°C (60°F)	1-3	1	—
@ −18°C (0°F)	12	24	12

*Magnamite is the trade name of the graphite fiber produced by Hercules, Inc.
**The designation "AS" fiber is for the high-strength version, and "HMS" fiber is for the high-modulus version.

3-2.4 PROPERTIES OF CARBON-GRAPHITE FILAMENTS

The characteristics of carbon-graphite fibers may be considered in four distinct areas: physical and mechanical properties, general chemical resistance, electrical properties, and thermal properties (Refs. 10 and 11).

Because these fibers tend to be almost completely carbon-graphite in composition, some anticipated properties might be stability and strength at high temperatures, i.e., 2482°C (4500°F) in nonoxidizing atmospheres; high resistance to thermal shock; high thermal conductivity of solid fiber; lower thermal conductivity of cloth and tape; low coefficient of thermal expansion; good electrical conductivity; high compressive strength; stiffness of solid fiber; flexibility of filament, cloth, or tape; high resistance to chemical attack and corrosion; high resistance to erosion; and good machinability. Protection from oxidizing atmospheres is required for high-temperature uses of carbon or graphite materials, i.e., above 371°C (700°F). Other characteristics of interest include high radiation emissivity; low friction; self-lubrication; high absorption of gases and vapors; high moderating ratio, i.e., ratio of fast neutron slowing down power to bulk neutron absorption coefficient; and high ratio of thermal neutron scattering to absorption cross section.

3-2.4.1 Physical and Mechanical Properties

The physical and mechanical properties of carbon-graphite fibers are given in Tables 3-1 through 3-3. They illustrate the wide range of properties attainable with carbon-graphite fibers and the capability of their being tailored to meet a specific requirement.

Carbon-graphite fibers specified by MIL-Y-83371 and MIL-G-83410 illustrate the emphasis on the variability of tensile modulus of elasticity and strength as the basis for use. The PAN fiber is the basis of the majority of commercially available carbon-graphite fibers.

As of 1979, commercially available structural fibers were derived from PAN fibers or a specific type of petroleum pitch. The PAN-derived fibers have been studied for some time. For several of the lower modulus PAN fibers, significant data bases have been developed through use of carbon-graphite fibers in aerospace structures. The PAN-derived fibers are selected for their high strength, which ultimately affects the properties of the finished composite.

Pitch-based carbon-graphite fibers are newer. Although they are not as strong as the low-modulus PAN fibers, they can be processed readily to yield high-modulus structures; thus these fibers are very useful if stiffness is a critical requirement. Cost projections, with volume production, are favorable for the pitch fibers because the price of raw precursor material is low. Table 3-7 gives a direct comparison of some properties of the pitch-derived fibers to PAN in the fiber and cured composite form with an epoxy resin.

TABLE 3-7. PROPERTIES OF POLYACRYLONITRILE (PAN) AND PITCH-BASED CARBON-GRAPHITE FIBERS

PROPERTY	PAN-BASED		PITCH-BASED	
	THORNEL 50*	CELION GY-70**	THORNEL P55	THORNAL P-75
Fiber strength, MPa (ksi)	2413 (350)	1862 (270)	1896 (275)	2068 (300)
Tensile modulus, GPa (10^6 psi)	393 (57)	517 (75)	379 (55)	517 (75)
Composite strength†				
Longitudinal, MPa (ksi)	1207 (175)	758 (110)	1034 (150)	1034 (150)
Transverse, MPa (ksi)	34.5 (5)	27.6 (4)	—	—
Composite modulus†				
Longitudinal, GPa (10^6 psi)	221 (32)	303 (44)	221 (32)	303 (44)
Transverse, GPa (10^6 psi)	34.5 (5)	27.6 (4)	—	—
Interlaminar shear, MPa (ksi)	69 (10)	48.3 (7)	31.0 (4.5)	20.7 (3.0)

*Thornel is a trade name of Amoco Performance Products Division of Amoco, Inc.
**Celion is a trade name of BASF Structural Materials, Inc.
†Property for typical unidirectional fiber/epoxy structure

3-2.4.2 Chemical Resistance Properties

With the use of the proper plastic matrix system, carbon-graphite fiber/resin composite systems can have good to excellent chemical resistance, and resistance to 149°C (300°F) is possible for long periods of time. Certain epoxy matrix composites have replaced glass-reinforced composites in alkaline environments because the carbon-graphite fiber portion has greater resistance to stress-corrosion deterioration.

Carbon-graphite fibers generally have good resistance to common alkalies at all aqueous concentrations to 93°C (200°F), water solutions of most alkaline/acidic/neutral salts up to 93° to 104°C (200° to 220°F), 50% by volume of hydrochloric acid in water to 49°C (120°F), 50% by volume of sulfuric acid in water to 49°C (120°F), 50% by volume of nitric acid in water to 49°C (120°F), 50% by weight of sodium hydroxide in water, 50% by weight of phosphoric acid in water, 90% by weight of formic acid in water, 32% by weight of benzene sulfonic acid in water, 28% concentrated ammonium hydroxide, and glacial acetic acid to 24°C (75°F). These fibers will react with most metals in the molten state to form metallic-carbide-type compounds.

3-2.4.3 Electrical Properties

Plastics reinforced with carbon fibers become electrically conductive, and this conductivity gives the benefits of static drain and radio frequency suppression in items such as aircraft structures, electronic equipment enclosures, automotive ignitions, and small appliance housings. This characteristic also allows the use of electrostatic painting of the composite substrate. Other uses include conductive housings and resistance heating (Ref. 12).

Table 3-8 gives data on the electrical resistance of several carbon-graphite materials.

TABLE 3-8. ELECTRICAL RESISTANCE OF CARBON-GRAPHITE MATERIALS

FILAMENT	RESISTANCE, Ω-cm$\times 10^{-14}$
Celion* GY70 filament	6.5
Celion 1000, 3000, and 6000 filaments	15
Thornel ** VMA filaments, 9μ diameter	12
Thornel Mat, 10.16 mm (0.4 in.) thick	7000

*Celion is a trade name of BASF Structural Materials, Inc.
**Thornel is a trade name of Amoco Performance Products Division of Amoco, Inc.

3-2.4.4 Thermal Properties

The relatively high thermal conductivity of carbon-graphite-filament-reinforced structures allows heat dissipation or transfer in end products, such as gears, bearings, brake pads, and other applications, i.e., friction-generated heat. Carbon-graphite products also are used in processing equipment that operates at cryogenic temperatures. Thermal conductivity is anisotropic and is indicated in Table 3-9. Conductivity in a unidirectional type of construction is much greater than it is in a construction of unidirectional fibers plied in different directions (0, ±45, and 90 deg).

The thermal response properties of carbon-graphite fibers are different from those of most other materials. Linear expansion coefficients in the direction of the fiber axis range from slightly negative for low-modulus fibers, 207 GPa (30×10^6 psi), to about 0.9×10^{-6} cm/cm·°C (0.5×10^{-6} in./in.·°F) for high-modulus fibers. This range makes possible the design of products with zero to very low linear and planar thermal expansion. This feature is particularly desirable for parts in precision instruments,

TABLE 3-9. THERMAL CONDUCTIVITY* OF HERCULES GRAPHITE FIBER TYPES

TYPE	UNIDIRECTIONAL	PLIED CONSTRUCTION (0,±45, and 90 deg)
Graphite AS (intermediate tensile)	6-10	2-3
Graphite HTS (high tensile)	12-20	3-6
Graphite HMS (high modulus)	28-35	6-12

*Thermal conductivity values are in Btu·ft/(h·ft^2·°F)

e.g., telescopes and other optical instruments and for alignment components in aerospace antennas and other parts requiring critical retention of dimensions as temperatures change. Transverse expansion coefficients are different from values along the fiber axis. These coefficients are nominally 27×10^{-6} cm/cm·°C (15×10^{-6} in./in.·°F)—much higher due to the influence of the resin matrix.

The thermal expansion of a composite depends upon both the orientation of the fibers and the thermal behavior of the matrix material. The composite must be designed to insure that volumetric expansion in the nonstrained direction does not exceed the tolerance limits for the structure. In situations in which expansion is troublesome, the use of some random orientation with short length fibers may allow a suitable design without extensive compromises.

Polymer matrices expand more than carbon-graphite fibers; therefore, thermally induced stresses can be produced in a composite. For example, differences in directional thermal expansion coefficients can lead to undesirable stress patterns and microcracking in some cross-ply laminates. Matrix resins, however, have larger elastic strain response than the fibers. Because these resins are relatively ductile, they tend to absorb heat-induced strains. The properties of the composite structure are not deteriorated provided the fiber-matrix interfacial bond strength is not exceeded.

Service temperature of the composite depends solely on the matrix systems. For high-temperature epoxies, the service temperature range can cover several hundred degrees to a maximum of approximately 149° to 177°C (300° to 350°F).

3-2.5 SURFACE TREATMENTS

As noted in Chapter 2, a number of methods have been fairly well defined for the use of sizings in order to enhance forming and handling operations for glass fibers. Additionally, a variety of finishes is available to attain good interfacial adhesion of glass to the resin system. Overall, the fibers are protected, and wet out by resin is improved.

To date, there has been no clear-cut statement regarding the use of sizings and finishes in preparing carbon-graphite filamentary products. Oxidative or halogenated treatments are used to modify the carbon-graphite fiber surface primarily to introduce chemical groups that enhance bonding with a resin matrix (Refs. 13 and 14).

3-2.6 CARBON-GRAPHITE FIBER SPECIFICATIONS

Table 3-10 lists the major specifications for carbon-graphite fibers and related derived products. Table 3-10 contains 8 specifications of the 17 developed for the epoxy-impregnated graphite fiber.

3-3 ARAMID FIBERS

The Federal Trade Commission approved the designation "aramid" to denote aromatic polyamide fibers with high-modulus characteristics. DuPont is the sole domestic supplier of such fibers; however, other companies are reportedly developing high-modulus aramid fibers or fibers with "aramid-like" chemistry (Ref. 7).

3-3.1 CONTINUOUS ARAMID FIBERS: PRODUCT AVAILABILITY

Aramid fibers with high-performance characteristics can be used where lighter weight, greater stiffness, and higher tensile strength are required over and above those of composites made with fiberglass reinforcement (Ref. 15). The aramid fibers, available from duPont, are based upon an aromatic polyamide structure. These fibers, trade named Kevlar® 29 and Kevlar® 49, have the low density, high tensile strength, and increased modulus suitable for high-performance reinforced composites. Aramid composites generally show slightly lower interlaminar shear and flexural strength, higher flexural and compressive modulus, but only about 50% of the compressive strength of end-items made with the same volume fraction of glass reinforcement in the same resin.

Presently, Kevlar® 49 is the sole fiber marketed for use as reinforcement in advanced composites. Kevlar® 29 is used in ballistic protection; architectural fabrics; rope; coated, inflatable fabrics; automobile tires; and similar items (Ref. 16). Prices for Kevlar® 49 range from $33 to $44 per kilogram ($15 to $20 per pound).

3-3.2 GENERAL COMPARISON: ARAMID VERSUS GLASS FIBERS

A savings in weight results from the lower specific gravity of 1.45 for aramid fibers compared to E-glass which has a specific gravity of 2.55. Higher stiffness is evidenced from a Young's modulus of 131 GPa (19×10^6 psi) for Kevlar® 49 versus a value of 69 GPa (10×10^6 psi) for E-glass, and a value of 86 GPa (12.5×10^6 psi) for

TABLE 3-10. SPECIFICATIONS FOR CARBON-GRAPHITE FIBER AND DERIVED PRODUCTS

MILITARY SPECIFICATIONS

1. MIL-Y-83371 (USAF) *Yarns, Graphite, High-Modulus, Continuous Filament*
2. MIL-G-83410 (USAF) *Graphite-Fiber-Impregnated Tape and Sheet, for Hand Lay-Up*

AEROSPACE MATERIALS SPECIFICATIONS*

1. AMS 3894	*Carbon Fiber Tape and Sheet, Epoxy-Resin-Impregnated*
2. AMS 3894/1	*Carbon Fiber Tape and Sheet, Epoxy-Resin-Impregnated, G 110,000 (758) Tensile, 27,000,000 (186) Modulus, 175 (350)*
3. AMS 3894/2	*Carbon Fiber Tape and Sheet, Epoxy-Resin-Impregnated, G 150,000 (1034) Tensile, 20,000,000 (138) Modulus, 175 (350)*
4. AMS 3894/3	*Carbon Fiber Tape and Sheet, Epoxy-Resin-Impregnated, G 150,000 (1034) Tensile, 19,000,000 (131) Modulus, 80 (180)*
5. AMS 3894/4	*Carbon Fiber Tape and Sheet, Epoxy-Resin-Impregnated, G 150,000 (1034) Tensile, 15,000,000 (103) Modulus, 80 (180)*
6. AMS 3894/5	*Carbon Fiber Tape and Sheet, Epoxy-Resin-Impregnated, G 110,000 (758) Tensile, 27,000,000 (186) Modulus, 80 (180)*
7. AMS 3894/6	*Carbon Fiber Tape and Sheet, Epoxy-Resin-Impregnated, G 150,000 (1034) Tensile, 15,000,000 (103) Modulus, 175 (350)*
8. AMS 3894/7	*Carbon Fiber Tape and Sheet, Epoxy-Resin-Impregnated, G 90,000 (620) Tensile, 40,000,000 (275) Modulus, 80 (180)*
9. AMS 3894/8	*Carbon Fiber Tape and Sheet, Epoxy-Resin-Impregnated, G 70,000 (483) Tensile, 36,000,000 (248) Modulus, 80 (180)*

*Each specification depicts the property characteristics of the resultant laminate. For example, AMS 3894/1 is for carbon fiber having 758 MPa (110,000 psi) minimum tensile strength, 186 GPa (27,000,000 psi) tensile modulus, and 347°F (175°C) maximum recommended surface temperature.

S-glass. Compared to glass-fiber-reinforced products, products containing aramid fibers provide greater electrical and thermal insulation (Ref. 17), they show greater damping to mechanical and sonic vibration, and they transmit solar and radar energy. Aramid organic fibers are processed easily on conventional textile machinery. Thus a wide variety of reinforcement forms can be obtained, e.g., yarns, rovings, woven goods, knit goods, felts, and papers. Aramid fiber composites show low creep, high impact resistance, and very good creep rupture.

3-3.3 ARAMID FIBER FORMS

Continuous aramid fibers are similar to other reinforcements and are available as rovings, yarns, woven fabrics, and prepregs.

3-3.3.1 Rovings and Yarns

Aramid fibers are generally characterized by denier, tensile strength and modulus, and yield per pound. Denier is the weight in grams of 9000 m of yarn. Table 3-11 characterizes the available Kevlar® 49 yarns and rovings (Ref. 18). The heavier denier rovings are used in filament winding and pultrusion applications. The essentially yellow fibers are supplied without finish or treatment, but treatments may be applied when required to promote compatibility of the fiber with a specific resin system.

3-3.3.2 Woven Fabrics

The toughness and relative insensitivity of Kevlar® 49 to surface defects result in a yarn that can be easily processed on standard textile equipment to produce a wide variety of woven fabrics. Many aramid fabrics are designed to replace fiberglass on a ply-to-ply basis with a resultant weight saving proportional to the density ratio of the two materials. Hence the fibers are woven into fabric forms similar to those of fiberglass. For example, both Kevlar® 49 and fiberglass style 181 fabrics are an 8-harness satin weave which results in similar drape and cover characteristics as well as identical thickness in cured composites. At 0.25 mm (0.01 in.) ply thickness the Kevlar® 49, 181 style weave has an areal mass density of 0.17 kg/m^2 (5.0 ozm/yd^2), whereas the fiberglass has an areal mass density of 30.85 kg/m^2 (910 ozm/yd^2).

Standard fabrics are characterized in Table 3-12 from the Society of Automotive Engineers (SAE) Aerospace Material Specification (AMS) 3902B, *Cloth, Organic Fiber, High Modulus For Structural Composites*. A variety of fabric constructions and widths are available from a number of commercial weavers.

TABLE 3-11. YARNS AND ROVINGS OF KEVLAR® 49 ARAMID

DENIER*	NO. OF FILAMENTS	NOMINAL PACKAGE WEIGHT		PACKAGE YIELD	
		kg	lb	m/kg	yd/lbm
Yarns:					
195	134	2.27	5	46,104	22,870
380	267	2.27	5	23,659	11,736
1,140	760	2.27	5	7,886	3,912
1,420	1,000	2.27	5	6,332	3,141
Rovings:					
4,560	3,040	2.27	5	1,972	978
6,000	4,000	2.27	5	1,498	743
7,100	5,000	4.54	10	1,266	628
11,400	7,600	4.54	10	788	391
22,720	15,200	4.54	10	395	196

*Denier = weight in grams of 9000 m of yarn.

TABLE 3-12. CONSTRUCTION OF WOVEN ORGANIC FABRIC

STYLE	PATTERN	YARN COUNT, in.$^{-1}$		YARN TYPE		DENIER, g/9000m	THICKNESS mm	(10^{-3} in.)	MASS AREAL DENSITY, g/m^2	(ozm/yd^2)
		WARP	FILL	WARP	FILL					
120	Plain	34	34	195 1/0	195 1/0	195	0.11	(4.5)	61	(1.8)
220	Plain	22	22	380 1/0	380 1/0	380	0.10	(4.0)	75	(2.2)
181	8-H satin	50	50	380 1/0	380 1/0	380	0.28	(11.0)	170	(5.0)
281	Plain	17	17	1140 1/0	1140 1/0	1140	0.25	(10.0)	170	(5.0)
285	Crowfoot	17	17	1140 1/0	1140 1/0	1140	0.25	(10.0)	170	(5.0)
143	Crowfoot	100	20	380 1/0	195 1/0	380	0.25	(10.0)	190	(5.6)
243	Crowfoot	38	18	1140 1/0	380 1/0	1140	0.33	(13.0)	227	(6.7)
328	Plain	17	17	1420 1/0	1420 1/0	1420	0.33	(13.0)	231	(6.8)

Kevlar® 49 is not available commercially in nonwoven fabrics. However, some developmental nonwoven fabrics have been produced for circuit board and aircraft applications.

3-3.3.3 Prepregs

A wide variety of prepregs is available from commercial sources with various resin formulations (epoxy, phenolic, polyimide, and polyester), degrees of tack, flow, and resin content. In addition to fabric, collimated tape products of various widths and thicknesses per ply as well as unidirectional broad goods made from yarns and rovings are manufactured into prepregs.

3-3.4 PROPERTIES OF ARAMID FILAMENTS

Kevlar® 49 fibers are nonconductive and flame resistant and have low density, high chemical stability, outstanding creep rupture characteristics, good fatigue performance, notch insensitivity, and excellent processibility.

Aramids have high temperature capability; they have no melting point and decompose at greater than 400°C (752°F). Their high temperature capability is sufficient for useful reinforcement of many widely used organic polymer matrices. A continuous service temperature of 120°C (248°F) appears to be characteristic of present aramid fibers. This restriction might, however, exclude reinforcement of very high-performance polyimide resins rated for continuous service up to 300°C (572°F). These fibers possess good chemical resistance. Kevlar® 49 is more resistant than E-glass to hydrofluoric acid and sodium hydroxide but is less resistant than glass to hydrochloric acid. The aramid fibers generally resist common solvents, fuels, and lubricants at ambient temperatures (Ref. 19).

3-3.4.1 Mechanical Properties

The mechanical properties of Kevlar® 29 and 49 are shown in Table 3-13.

3-3.4.2 Chemical Properties

Kevlar® fibers have excellent chemical resistance; however, they are attacked by strong acids and bases. Table 3-14 presents some data on the effects of chemicals on the tensile strength of Kevlar® 29 and 49.

3-3.4.3 Thermal Properties

Kevlar® 49 yarn has high thermal stability when exposed in oxygen and nitrogen atmospheres. In both atmospheres there is little change in elongation and high strength and modulus up to 200° C (392° F). The specific heat is a function of temperature. Thermal conductivity is a function of temperature with heat flow both perpendicular and parallel to the fibers. Table 3-15 summarizes thermal properties of Kevlar® 49.

TABLE 3-13. MECHANICAL PROPERTIES* OF KEVLAR® REINFORCING YARN

PROPERTY	KEVLAR® 29, 1500 DENIER	KEVLAR® 49, 1420 DENIER
Specific gravity, dimensionless	1.44	1.44
Tensile strength MPa (ksi)	2758 (400)	2758 (400)
Tensile modulus, GPa (10^6 psi)	62 (9)	117 (17)
Elongation, %	3.6	2.5

*Yarn tested was 254-mm (10-in.) gage length, bare yarn, 2 twists per 25.4 mm (1 in.).

TABLE 3-14. STABILITY OF KEVLAR® 29 AND KEVLAR® 49 IN CHEMICALS

CHEMICAL	CONCENTRATION, %	TEMPERATURE, °C	TEMPERATURE, °F	TIME, h	TENSILE STRENGTH LOSS, % KEVLAR® 29	TENSILE STRENGTH LOSS, % KEVLAR® 49
Hydrochloric acid	37	21	70	24	NA*	0
Hydrochloric acid	37	21	70	1000	83	NA
Hydrofluoric acid	10	21	70	100	12	8
Nitric acid	1	21	70	100	18	5
Sulfuric acid	10	21	70	100	14	NA
Sulfuric acid	10	21	70	1000	NA	31
Sodium hydroxide	50	21	70	24	NA	10
Ammonium hydroxide	28	21	70	1000	10	NA
Acetone	100	21	70	24	0	0
Dimethyl formamide	100	21	70	24	NA	0
Methyl ethyl ketone	100	21	70	24	NA	0
Trichloroethylene	100	21	70	24	NA	1.5
Trichloroethylene	100	88	190	387	7	NA
Ethyl alcohol	100	21	70	24	0	0
Jet fuel (JP-4)	100	21	70	300	0	4.5
Jet fuel (JP-4)	100	199	390	100	4	NA
Brake fluid	100	21	70	312	2	NA
Brake fluid	100	113	235	100	33	NA
Transformer oil (Texaco #55)	100	60	140	500	4.6	0
Kerosene	100	60	140	500	9.9	0
Freon 11	100	60	140	500	0	2.7
Freon 22	100	60	140	500	0	3.6
Tap water	100	100	212	100	0	2
Seawater (Ocean City, NJ)	100	—	—	1 yr	1.5	1.5
Water at 10,000 psi	100	21	70	720	0	NA
Water, superheated	100	138	280	40	9.3	NA
Steam, saturated	100	149	300	48	28	NA

*NA = not available

TABLE 3-15. THERMAL PROPERTIES OF KEVLAR® 49

PROPERTY	VALUE
Long-term use temperature in air, °C (°F)	160 (320)
Decomposition temperature, °C (°F)	500 (930)
Shrinkage, %/°C (%/°F)	4×10^{-4} (2.2×10^{-4})
Thermal coefficient of expansion, cm/(cm·°C) (in./(in.·°F))	
longitudinal at 0° to 100°C (32° to 212°F)	-2×10^{-6} (-1.1×10^{-6})
radial at 0° to 100°C (32° to 212°F)	$+59 \times 10^{-6}$ ($+33 \times 10^{-6}$)
Thermal conductivity k at 25°C (77°F), W/(m·K) (BTU·in./(h·ft^2·°F))	
heat flow perpendicular to fibers	0.041 (0.285)
heat flow parallel to fibers	0.048 (0.334)
Specific heat at 25°C (77°F), kJ/(kg·K) (Btu/(lb·°F))	1.24 (0.34)
Heat of combustion, kJ/kg (Btu/lb)	34,890 (15,000)

3-3.5 ARAMID FIBER SPECIFICATIONS

Table 3-16 lists the major specifications for organic fibers and related derived products. One or more of the aramid fibers meets the requirements of these documents. Table 3-16 contains 6 of the 12 specifications of the AMS 3901 series. AMS 3903 contains a total of eight specific categories of characteristics.

3-4 BORON FIBERS

Boron fibers were the first family of high-strength and high-modulus reinforcements developed for military and aerospace applications. The use of boron fibers has been investigated by the Air Force Materials Laboratory, and there has been interest within the Department of Defense in boron fibers. As a result of these investigations, these

TABLE 3-16. SPECIFICATIONS FOR ARAMID ORGANIC FIBER AND DERIVED PRODUCTS

MILITARY SPECIFICATION	
MIL-Y-83370A (USAF),	*Yarn, Roving and Cloth: High-Modulus, Organic Fiber*
AEROSPACE MATERIAL SPECIFICATIONS	
1. AMS 3901	*Organic Fiber, (Para-Aramid), Yarn and Roving, High-Modulus*
2. AMS 3901/1	*Yarn, Organic Fiber (Para-Aramid), High-Modulus, OY 390,000 (2690) Tensile Strength, 18,000,000 (125) Tensile Modulus, 195 Denier, 0.6% Finish*
3. AMS 3901/2	*Yarn, Organic Fiber (Para-Aramid), High-Modulus, OY 390,000 (2690) Tensile Strength, 17,500,000 (120) Tensile Modulus, 380 Denier, 0.6% Finish*
4. AMS 3901/3	*Yarn, Organic Fiber (Para-Aramid), High-Modulus, OY 390,000 (2690) Tensile Strength, 16,500,000 (115) Tensile Modulus, 1140 Denier, 0.6% Finish*
5. AMS 3901/4	*Yarn, Organic Fiber (Para-Aramid), High-Modulus, OY 390,000 (2690) Tensile Strength, 16,500,000 (115) Tensile Modulus, 1420 Denier, 0.6% Finish*
6. AMS 3901/5	*Roving, Organic Fiber (Para-Aramid), High-Modulus, OR 450,000 (3100) Tensile Strength, 17,500,000 (120) Tensile Modulus, 7100 Denier, 0.6% Finish*
7. AMS 3901/6	*Roving, Organic Fiber (Para-Aramid), High-Modulus, OR 500,000 (3450) Tensile Strength, 17,500,000 (120) Tensile Modulus, 4560 Denier, 0.6% Finish*
8. AMS 3902	*Cloth, Organic Fiber High-Modulus, for Structural Composites*
9. AMS 3903	*Cloth, Organic Fiber (Para-Aramid) High-Modulus, Epoxy-Resin-Impregnated*
AMERICAN SOCIETY OF TESTING AND MATERIALS SPECIFICATION	
ASTM D3317	*High-Modulus, Organic Yarn and Roving*

fibers are used in several aircraft applications. However, due to its high cost (approximately $775 per kilogram ($350 per pound)) and the development of carbon-graphite and aramid fiber, boron fiber has not become a large volume reinforcement. The only domestic commercial producer of boron fibers is the Avco Corporation, which produces prepreg tapes principally with epoxy resins.

3-4.1 CONTINUOUS BORON FIBERS: PRODUCT AVAILABILITY

Boron fibers show high compressive strength and a high specific modulus; both of which are properties that make these fibers attractive in compressive or stiffness designs. Filament properties are very uniform, and the high modulus of boron results in a lower strain of plastic matrices. Also the fibers bond well to a plastic matrix. The combination of these properties acts to give high fatigue life values and endurance limit values—values about 70% of the ultimate strength of the composite—in boron-fiber-reinforced composites.

Another advantage of the fiber is that its thermal coefficient of expansion is close to the value for titanium. This similarity allows boron composites to be used as selective reinforcements on titanium structures because there are minimal thermally induced stresses or strains. The boron-fiber-reinforced titanium composite yields high thermal cycling life and minimal warpage. Also boron fibers have high creep resistance and excellent stress-rupture resistance; both of which make them useful for sustained loading conditions.

The disadvantages of boron are its brittleness, large filament size, and hardness. The fiber cannot be woven into cloth and it does not drape well. It requires a minimum bend radius of 12.7 mm (0.5 in.). Being brittle, it shows low impact resistance, and it is fairly susceptible to handling damage. Its hardness gives good erosion resistance to a composite. However, it is difficult and costly to machine; carbide or diamond tools are needed.

Currently, about 90% of the filament produced is converted to a continuous boron-epoxy prepreg tape. The cost of the tape is about $770 to $880 per kilogram ($350 to $400 per pound); the weight percent of boron is about 65%.

3-4.2 PRODUCTION METHODS

Boron filament is made by the chemical vapor deposition process (Ref. 20). The reaction is based on the reduction of boron trichloride by hydrogen on an electrically heated moving substrate of tungsten wire, i.e., halide reduction process.

The reactor portion consists of a glass deposition tube that is fitted with gas inlet and outlet ports, two mercury-filled electrodes, a variable power supply to the two electrodes, a tungsten wire substrate payout system, and a boron filament take-up system.

Tungsten wire, 0.013 mm (0.0005 in.) in diameter, is first passed through a cleaning stage* and then drawn through the reactor. The wire is heated to 1300°C (2372°F) by the power supply. A stoichiometric mixture of boron trichloride and hydrogen is introduced at the top of the reactor. At 1300°C (2372°F) a layer of boron is deposited on the tungsten wire, i.e.,

$$2BCl_3 + 3H_2 \rightarrow 2B + 6HCl.$$

Gases exhausted from the reactor are HCl, unreacted H_2, BCl_3 (which is recovered), and intermediate reactants. The diameter of the boron filament depends on the speed with which the tungsten wire is drawn through the reactor. Filaments with diameters of 0.10, 0.14, and 0.20 mm (0.004, 0.0056, and 0.008 in.) are produced by this method.

Several chemical reactions occur as the boron is being deposited. By-products, such as B_2H_4, $HBCl_2$, and B_2H_5Cl, are formed in the gas phase. In the wire core of the filament are solid products from the reaction of tungsten and boron. These are borides, such as δ-WB, W_2B_5, and WB_4.

3-4.3 BORON FILAMENT FORMS

Collimated boron filaments are processed into an intermediate product: boron-epoxy preimpregnated monolayer tape. This material is used to fabricate composite structures. Epoxy-boron prepreg is commercially available in 76.2-, 152.4- and 1219.2-mm (3-, 6- and 48-in.) wide tape (Ref. 21).

The preimpregnated material usually has about 206 to 214 boron filaments for each 25.4-mm (1-in.) width of material. A maximum loss of about 10% should be allowed during processing. The boron filaments should not cross over each other, and the average filament spacing should be about 0.02 mm (0.0008 in.).

At present no finishes are used on boron filaments. A good adhesive bond between the filament and the resin is dependent on complete wetting of the filament by the uncured resin. The critical surface tension for wetting boron filament is between 30 to 32 dynes/cm. Therefore, a resin system having a surface tension below this value should completely wet the boron filament surface.

As with all prepregs, the storage life of boron-epoxy prepregs is a function of moisture and temperature. Therefore, prepregs should be stored in sealed plastic bags at a temperature not exceeding −18°C (0°F) at which they usually have a storage life of six months. Before use, the material should be brought to room temperature in the unsealed plastic bag.

*Wire is heated red-hot in a hydrogen atmosphere to remove surface contaminants and residues of lubricants used in drawing tungsten wire.

3-4.4 PROPERTIES OF BORON FILAMENTS

Properties of boron filaments vary with filament diameter and internal and surface characteristics. Flaws may also have an effect. The low percentage of low and high strengths do not significantly affect the strength of the composite.

Boron filaments possess strength, stiffness, and density superior to any other reinforcing fiber. However, because of their cost, careful assessment must be given to their use in each application.

3-4.4.1 Mechanical Properties

Overall, boron fibers provide a combination of high modulus and high tensile strength not available with other reinforcements; modulus values of 366 GPa (53×10^6 psi) and strength values of 3449 MPa (500×10^3 psi) have been reported. Higher tensile strength values to 5518 MPa (800×10^3 psi) are possible if the severity of flaws can be reduced in the production process (Ref. 22). The high temperature resistance of boron is advantageous; however, in the organic-matrix composite structure, its usefulness is limited by the resin matrix properties. This property has led to increased interest in using boron fibers in metal-matrix composites.

Table 3-17 lists some mechanical and physical properties for boron fibers based on fiber diameter.

3-4.4.2 Thermal Oxidation Properties

Test results indicate that boron filaments are subject to oxidative degradation upon extended exposures at elevated temperatures in air. Test results also show that exposure of unprotected filaments to 316°C (600°F) in air reduces tensile strengths by approximately 70%. The same filaments exposed at 316°C (600°F) in argon are reduced by 29% in 900 h. Filaments coated with a film of silicon carbide, however, show no loss of strength when exposed to 316°C (600°F) in air for 900 h. Also unprotected filaments subjected to 204°C (400°F) in air for 900 h show no loss in strength.

3-4.5 BORON FIBER SPECIFICATIONS

Table 3-18 lists major specifications for boron fibers and related derived products. Table 3-18 also lists three of the six specifications for AMS 3867.

TABLE 3-17. BORON FILAMENT PROPERTIES

PROPERTY	DIAMETER, mm (in.)		
	0.102 ± 0.005 (0.0040 ± 0.0002)	0.142 ± 0.003 (0.0056 ± 0.0001)	0.203 ± 0.005 (0.0080 ± 0.0002)
Mass density, average, kg/m³ (lb/in.³)	2602 (0.094)	2491 (0.090)	2380 (0.086)
Ultimate tensile strength, average GPa (ksi)	2.8 (400)	2.8 (400)	2.8 (400)
Tensile modulus of elasticity, GPa (10^6 psi)	379 (55) minimum	400-414 (58-60) average	400-414 (58-60) average
Coefficient of thermal expansion, cm/cm·°C (in./in.·°F)	5.4×10^{-6} (3×10^{-6})	5.4×10^{-6} (3×10^{-6})	5.4×10^{-6} (3×10^{-6})
Melting point, °C (°F)	2038 (3700)	2038 (3700)	2038 (3700)
Hardness, mohs scale	>9	>9	>9

TABLE 3-18. SPECIFICATIONS FOR BORON FIBER AND DERIVED PRODUCTS

	MILITARY SPECIFICATIONS
1. MIL-B-83353	*Boron Monofilament, Continuous, Vapor-Deposited*
2. MIL-B-83369	*Boron Filament Reinforcement, Continuous, Epoxy-Resin-Impregnated*
	AEROSPACE MATERIALS SPECIFICATIONS
1. AMS 3865	*Filaments, Boron-Tungsten Substrate, Continuous*
2. AMS 3867	*Boron Filament Tape, Epoxy-Resin-Impregnated*
3. AMS 3867/1	*Boron Filament Tape, Epoxy-Resin-Impregnated, Type B4.0-E375*
4. AMS 3867/2	*Boron Filament Tape, Epoxy-Resin-Impregnated Type B5.6-E375*
5. AMS 3867/3	*Boron Filament Tape, Epoxy-Resin-Impregnated Type B8.0-E375*

REFERENCES

1. L. J. Korb, "Space Vehicles", *Engineering Applications of Composites*, Academic Press, New York, NY, 1977.
2. *Advanced Composites Design Guide*, Third Edition, Air Force Materials Laboratory, Wright-Patterson Air Force Base, OH, 1974.
3. D. M. Riggs, *et al.*, "Graphite Fibers and Composites", *Handbook of Composites*, Van Nostrand Reinhold Co., New York, NY, 1982, pp. 196-271.
4. J. Delmonte, *Technology of Carbon and Graphite Fiber Composites*, Van Nostrand Reinhold Co., New York, NY, 1981, pp. 41-87.
5. J. V. Larsen and T. G. Smith, *Carbon Fiber Structures*, NOLTR-71-166, Naval Ordnance Laboratory, White Oak, MD, October 1971.
6. H. F. Volk, "High-Modulus Pitch-Based Carbon Fibers", *Proceedings, Symposium on Carbon-Fiber-Reinforced Plastics*, Bamberg, West Germany, May 1977.
7. *Carbon and High-Performance Fibers*, Directory, 3rd Edition, Pammac Directories Ltd., High Wycombe, England, 1985.
8. N. W. Hansen, "Carbon Fibers", *Engineered Materials Handbook, Vol. 1*, ASM International, Materials Park, OH, 1987, pp. 112-3.
9. R. Shepler, M. Towne, and D. K. Saylor, "Carbon Fiber Composites", Machine Design 51, 88-95 (May 1979).
10. W. T. Freeman and G. C. Kuebler, "Mechanical and Physical Properties of Advanced Composites", *Composite Materials Testing and Design*, ASTM Special Technical Publication (STP), 546, American Society for Testing and Materials, Philadelphia, PA, 1974, pp. 435-56.
11. E. W. Tokarsky and F. J. Diefendorf, "Modulus and Strength of Carbon Fibers", *Proceedings, Twelfth Biennial Conference on Carbon*, American Carbon Committee, Pittsburgh, PA, July 1975, p. 301.
12. J. Wollan, "Review of Electrical and Thermal Properties of Carbon and Graphite", *ACS Symposium Series Petroleum Derived Carbons*, No. 21, American Chemical Society, Washington, DC, 1975, p. 378.
13. D. A. Scola, "High-Modulus Fibers and the Fiber-Resin Interface in Resin Composites", *Interface in Polymer Matrix Composites*, Academic Press, New York, NY, 1974, p. 217.
14. E. Fitzer, K. Geigl and W. Hottner, "Influence of C-Fiber Surface Treatment on Mechanical Properties of C/G Composites", *Fourteenth Biennial Conference Carbon*, American Carbon Committee, Pennsylvania State University, University Park, PA, June 1979, p. 236.
15. D. L. G. Sturgeon and R. I. Lacy, "High-Modulus Organic Fibers", *Handbook of Fillers and Reinforcements for Plastics*, Van Nostrand Reinhold, New York, NY, 1978, pp. 511-44.
16. D. L. G. Sturgeon, *et al*, "Kevlar® 49 Woven and Nonwoven Fabric Composites Performance and Applications", *Proceedings, 19th National SAMPE Symposium and Exhibition*, Vol. 19, Buena Park, CA, April 1974, pp. 229-43.
17. N. J. Abbott, J. G. Donovan, M. M. Schopper, and J. Skelton, *Some Mechanical Properties of Kevlar® and Other Heat-Resistant, Nonflammable Fibers, Yarns and Fabrics*, Technical Report AFML-TR-74-65, Air Force Materials Laboratory, Wright-Patterson Air Force Base, OH, 1975.
18. *Kevlar® 49 Data Manual*, DuPont de Nemours Chemical Co., Wilmington, DE, 1974.
19. C. C. Chiao and T. T. Chiao, "Aramid Fibers and Composites", *Handbook of Composites*, Van Nostrand Reinhold Co., New York, NY, 1982, pp. 272-317.
20. V. Krukonis, "Boron Filaments", *Handbook of Fillers and Reinforcements for Plastics*, Van Nostrand Reinhold Co., New York, NY, 1978, pp. 545-61.
21. H. DeBolt and V. Krukonis, *Low-Cost Boron Filament*, Technical Report AFML-TR-75-29, Air Force Materials Laboratory, Wright-Patterson Air Force Base, OH, 1975.
22. R. J. Suplinskas and J. V. Marzik, "Boron and Silicon Carbide Filaments", *Handbook of Reinforcements for Plastics*, Van Nostrand Reinhold Co., New York, NY, 1978, p. 345.

CHAPTER 4
PLASTIC MATRICES FOR COMPOSITES

Plastic matrices for use with continuous fiber reinforcements are discussed. The two most common resins are polyester and epoxy. Others of some importance include phenolic, silicone, polyimide, and polysulfone.

4-1 INTRODUCTION

The resins of interest for continuous fiber-reinforced composites include both thermoset and thermoplastic types. The major thermosets for matrices include polyesters, epoxies, phenolics, silicones, polyimides (condensation type). The major thermoplastics for matrices include polyimides (addition type) and polysulfones. Each resin type is discussed in the paragraphs that follow.

4-2 POLYESTER RESIN (THERMOSET)

Polyester resins for composite structures are based on the unsaturated polyesters (Ref. 1). The unsaturated polyesters, which dominate the composite market, are classed as condensation polymers. They are synthesized by reacting saturated and unsaturated dibasic acids with dihydric alcohols or glycols. This product, the structure of which is shown in Fig. 4-1, is dissolved in a reactive liquid monomer, such as styrene. The solution is cured (or polymerized) under the influence of heat, light, or a catalyst to produce a rigid cross-linked thermoset resin. Final cure may be brought about by reacting the prepolymers with various monomers or by a continued reaction of residual allylic groups within the polymer chain (Ref. 2).

4-2.1 POLYESTER TYPES AND GRADES

Maleic anhydride and its isomer, fumaric acid, are the principal unsaturates in polyester synthesis. The common saturates are orthophthalic anhydride and isophthalic acid. The principal glycols are propylene, diethylene, and ethylene glycols. Monomers for matrix resins include diallylphthalate (DAP), diallylisophthalate (DAIP), triallylisocyanurate (TAIC), styrene, vinyl toluene, methyl methacrylate, and dichlorostyrene.

Polyester systems are classified as general-purpose, flame-retardant, electrical, and corrosion-resistant grades.

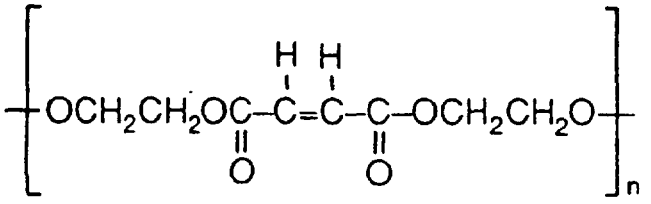

Figure 4-1. Unsaturated Polyester Structure

The costs range from $3.30 to $5.50 per kg ($1.50 to $2.50 per pound) (circa 1987) based on their constituent components as follows:

1. *General-Purpose.* Maleic anhydride, phthalic anhydride, propylene glycol, and styrene monomer are the least expensive. Isophthalic acid may be added for higher heat resistance and improved mechanical properties. Vinyl toluene is substituted for styrene to reduce volatile loss prior to curing.

2. *Flame-Retardant.* Chlorendic, tetrabromophthalic, tetrachlorophthalic, and hexachloro-octahydromethanonapthalene-dicarboxylic acids are used as saturated dibasic acids. Flame resistance can be attained through the use of fillers.

3. *Electrical.* Maleic anhydride, phthalic anhydride, and a mixture of diallylphthalate with vinyl toluene for the monomer are said to give superior electrical properties.

4. *Corrosion-Resistant.* Bisphenol-A and similar glycols impart improved resistance to various chemicals.

4-2.2 CURING MECHANISMS FOR POLYESTERS

The usual means of initiating the copolymerization of the polyester with the monomer is by the action of organic peroxide catalysts (Ref. 3). The specific catalyst determines the temperature at which curing takes place. Some catalysts are reactive at room temperatures, whereas others require varying degrees of heat to initiate a reaction. Examples of common catalysts for laminating compounds are benzoyl peroxide and tertiary butylperbenzoate, which cure in a temperature range of 113° to 154°C (235° to 310°F). Systems based on methyl ethyl ketone peroxide and cobalt naphthenate are used for curing at ambient temperatures. Promoters or accelerators are added to the resin system if lower cure temperatures are needed. Common promoters are organometallic salts, such as cobalt octoate, used with dimethyl aniline. The system may also contain retarders or inhibitors, such as hydroquinone or its derivative. Retarders reduce peak exotherms, and inhibitors prevent premature polymerization.

The cure rates for the various polyester types depend on the constituent acids and monomers and, to a lesser extent, on the glycol. For a specific resin system cure rates and gel times are functions of catalyst and promoter

concentration. Inhibitors and retarders increase cure and gel times. The catalyst and promoter should never be mixed together because mixing can result in an explosion or fire.

A characteristic of polyester cure is that, once the reaction has been initiated, it proceeds to completion and cannot be interrupted at an intermediate stage. Completion of cure occurs when 92-95% of the unsaturated ester sites have been depleted. With some systems, postcuring may increase the extent of saturation.

4-2.3 CHEMICAL STRUCTURE AND EFFECTS OF PROPERTIES

Table 4-1 lists the effects of components in polyesters on the properties of the resin. Other controlling properties are the molecular weight of the alcohol-acid reaction product, i.e., the alkyd, and the degree and spacing of the unsaturation, as determined by the ratio of saturated to unsaturated dibasic acids.

Equivalent maleic- or fumaric-based resins show little difference in mechanical properties. Fumaric resins are, however, less susceptible to moisture absorption. Increasing the amount of saturated acid (phthalic or isophthalic) produces a more flexible resin with improved thermal stability and less creep at elevated temperatures. Increasing the unsaturated acid, on the other hand, (maleic or fumaric) results in a more rigid resin and higher heat distortion temperatures. Consequently, the proportion of saturated and unsaturated acids is regulated to yield the desired combination of rigidity and thermal stability.

The major properties influenced by the glycols are flexibility and heat resistance. Propylene glycol produces a harder, less flexible resin than other glycols.

DAP monomer produces resins that are tougher and have higher thermal softening points than styrene cross-linked resins. The DAIP monomer cures faster than DAP and imparts improved thermal stability and retention of strength and electrical properties at elevated temperatures. The average molecular weight of a polyester prior to polymerization with the monomer ranges from 800 to 5000. Higher molecular weight results in improved resin properties.

Standard polyesters provide good chemical resistance. However, the polyester linkage is subject to hydrolysis when exposed to a caustic or acidic solution; consequently, properties are lowered. Isophthalate, bisphenol-A, and vinyl ester resins are more resistant to hydrolysis.

Isophthalic resins are similar to standard polyesters except that isophthalic is used as the dibasic acid. The incorporation of glycols, such as neopentyl glycol and trimethyl pentanediol, can also improve the required chemical resistance.

Bisphenol-A resins use propoxylated bisphenol-A as the glycol component. Its bulky molecular structure imparts resistance to hydrolysis.

An epoxy-resin backbone characterizes the vinyl esters. The backbone is reacted with acrylic acid or its derivatives to introduce the unsaturation for the oligomer structure. Vinyl esters not only provide excellent chemical resistance but also exhibit excellent processing characteristics and mechanical properties superior to those exhibited by standard polyesters.

TABLE 4-1. COMPONENTS IN POLYESTERS AND THEIR EFFECTS ON PROPERTIES

COMPONENTS	INGREDIENTS	CHARACTERISTICS
Unsaturated anhydrides and dibasic acids	a. Maleic anhydride	a. Lowest cost, reactivity, moderately high heat deflection temperature (HDT)
	b. Fumaric acid	b. Highest reactivity (cross-linking), higher HDT, more rigidity
Saturated anydrides and dibasic acids	a. Phthalic anhydride (orthophthalic)	a. Lowest cost, moderately high HDT, stiffness, high flexural and tensile strengths
	b. Isophthalic acid	b. Higher tensile and flexural strengths better chemical and water resistance
	c. Adipic acid, azelaic acid, and sebacic acid	c. Flexibility (toughness, resilence, impact strength); adipic acid is lowest in cost of flexibilizing acids
	d. Chlorendic acid; tetrabromophthalic acid; tetrachlorophthalic acid; hexachloro-octahydromethano-naphthalene-dicarboxylic acid	d. Flame Retardance

(cont'd on next page)

TABLE 4-1. (Cont'd)

COMPONENTS	INGREDIENTS	CHARACTERISTICS
Glycols	a. Propylene glycol	a. Lowest cost, good water resistance and flexibility, compatibility with styrene
	b. Dipropylene glycol	b. Flexibility and toughness
	c. Ethylene glycol	c. High heat resistance, tensile strength, low cost
	d. Diethylene glycol	d. Greater toughness, impact strength, and flexibility
	e. Bisphenol-A adduct; hydrogenated bisphenol-A adduct	e. Corrosion resistance, high HDT, high flexural and tensile strengths
	f. Neopentyl glycol	f. Corrosion resistance, light color
	g. Trimethyl pentanediol	g. Corrosion resistance, possible lower reactivity
Monomers	a. Styrene	a. Lowest cost monomer, high reactivity, high flexural strength, moderate HDT, boiling point 145°C (293°F)
	b. Methyl methacrylate	b. Light stability, weatherability, fairly high HDT
	c. Vinyl toluene	c. Boiling point higher than styrene, 172°C (341°F) compared to 145°C (293°F), permits higher molding temperatures, faster cycles, reduced cure time. Lower vapor pressure, 2 mm Hg compared to 6.6 mm Hg at 25°C (77°F), reduces monomer loss during mixing and later during processing prior to molding. Higher flash point, 60°C (140°F) compared to styrene at 31°C (88°F), reduces chance of fire.
	d. Alphamethyl styrene	d. Used as a comonomer with other monomers. Does not homopolymerize by the free-radical mechanism. It does copolymerize with styrene and methacrylate. Used at 5-25% replacement for the primary monomer. Raises the HDT and increases solvent resistance. Used to lower peak exotherm temperature. Shrinks less than styrene, i.e., 12.5% compared to 17.0%
	e. Divinyl benzene	e. Used with styrene to a maximum of 30%. Produces a highly cross-linked, three dimensional copolymer. Polymers are harder, brittle, more heat resistant, and have excellent resistance to solvents, such as esters, chlorated hydrocarbons, and ketones.
	f. Diallyl phthalate	f. Listed here because of its low volatility. Used to make molding compounds with long shelf life
	g. Monochlorostyrene	g. Used with styrene up to 50%. Gives short cure cycles, 20-30 s. Increases cracking and craze resistance. Contains 25.6% chlorine by weight. Imparts some flame resistance to the molding.

4-2.4 PROPERTIES OF POLYESTERS

The characteristics of polyesters will be discussed in distinct areas: mechanical properties, electrical properties, thermal properties, and chemical resistance (Refs. 4 and 5). The properties of the thermosetting polyester resins differ significantly from the thermoplastic types, which are generally reinforced with short fiber*.

4-2.4.1 Mechanical Properties

The mechanical properties of polyesters vary widely depending on the formulation. Limited data on cast, rigid resins indicate that maximum tensile strengths range from 69 to 76 MPa (10,000 to 11,000 psi) at an elongation of about 2.0%. Corresponding flexural strengths are 110 to 117 MPa (16,000 to 17,000 psi) with initial moduli of approximately 4137 MPa (0.6×10^6 psi). For more resilient resins elongations of greater than 8.0% are obtained with lower tensile strengths, depending on the amount of resiliency introduced. Some mechanical properties for general-purpose polyester resins are given in Table 4-2.

*Short-fiber-reinforced, thermoplastic polyester resins are summarized in Engineering Design Handbook, DARCOM-P 706-314, *Discontinuous Fiberglass-Reinforced Plastics*.

4-2.4.2 Electrical Properties

Electrical properties will vary greatly, depending upon the resin system and reinforcement. Some electrical properties of a general-purpose, cast styrene monomer polyester are given in Table 4-3.

TABLE 4-3. ELECTRICAL PROPERTIES OF GENERAL-PURPOSE POLYESTER

PROPERTY	VALUE
Dielectric strength, V/mil	
perpendicular, short time	494
parallel, short time	60
Dissipation factor, dimensionless	
60 Hz	0.002
10^6 Hz	0.015
Dielectric constant, dimensionless	
60 Hz	3.58
10^6 Hz	3.48
Volume resistivity, ohm/cm	6.9×10^{15}
Surface resistivity, ohms	1.9×10^{15}
Arc resistance, s	150

TABLE 4-2. MECHANICAL PROPERTIES OF POLYESTER RESINS

PROPERTY	RIGID CASTING	RESILIENT CASTING	FLEXIBLE CASTING
Flexural strength, MPa (ksi)	115 (16.7)	110.3 (16)	*
Flexural modulus of elasticity, GPa (10^6 psi)	4.76 (0.69)	2.76 (0.40)	*
Tensile strength, MPa (ksi)	72.4 (10.5)	48.3 (7)	9.38 (1.36)
Tensile elogation at break, %	1.8	8	65
Compressive strength, MPa (ksi)	155 (22.5)	212 (30.7)	*
Izod impact strength, notch, N·m/m (ft·lb/in.)	21.4 (0.4)	26.7 (0.5)	80.1 (1.5)
Water absorption 24h, %	0.21	0.23	0.40
Heat deflection temperature under 1.8 MPa (264 psi) load, °C (°F)	90 (194)	60 (140)	*
Specific gravity,			
cured	1.22	1.22	1.11
liquid	1.13	1.14	1.05
Thermal expansion, range 10° to 52°C (50° to 125°F), cm/cm·°C (in./in.·°F)	6.3×10^{-5} (3.5×10^{-5})	* *	* *
Hardness, Barcol	48	31	0
Resin content, 5%	100	100	100

*Too flexible to test

4-2.4.3 Thermal Properties

Table 4-4 presents some data on thermal properties of general-purpose polyesters.

Flame-retardant properties are imparted to polyesters by incorporating phosphorus or halogens into the molecular structure. Such variants include tetrachloro- or tetrabromophthalic anhydride, chlorendic acid (HET), dibromoneopentyl glycol, and dimethyl methane phosphonate. Further improvements are made with the addition of antimony oxide to the modified resins. Flame resistance, however, can be accompanied by a decrease in mechanical properties.

4-2.4.4 Chemical Resistance

As stated previously, the chemical resistance of polyesters varies greatly with chemical structure. Superior resistance is obtained with the vinyl esters and the isophthalic polyesters. Vinyl esters can be used in many applications involving acids (or their combinations), halogenated organics, caustics, and certain solvents. Table 4-5 lists some chemicals compatible with isophthalic resins up to 71°C (160°F). These resins are not recommended for use with highly alkaline solutions, oxidizing acids, or strong organic solvents such as acetone, amyl acetate, phenol, and chlorinated hydrocarbons.

4-2.5 POLYESTER SPECIFICATIONS

Some of the specifications that cover requirements for polyesters and related materials used as composites are

L-P-383(1), *Plastic Material, Polyester Resin, Glass Fiber Base, Low-Pressure Laminated*

MIL-R-7575C(2), *Resin, Polyester, Low-Pressure Laminating*

MIL-R-17549C(2)(SH), *Plastic Laminates, Fibrous-Glass-Reinforced, Marine Structural*

MIL-R-21607D(SH), *Resin, Polyester, Low-Pressure Laminating, Fire-Retardant*

MIL-R-25042B, *Resin, Polyester, High-Temperature Resistant, Low-Pressure Laminating*

MIL-P-25395A(ASG), *Plastic Material, Heat-Resistant, Low-Pressure Laminated, Glass Fiber Base, Polyester Resin*

TABLE 4-5. CHEMICALS ACCEPTABLE FOR EXPOSURE TO ISOPHTHALIC POLYESTERS*

Acetic acid, 10 and 25%
Aluminum chloride solutions**
Aluminum sulfate solutions
Ammonium chloride solutions
Ammonium sulfate solutions
Barium chloride solutions
Butylene glycol
Calcium chloride solutions
Crude oil
Cupric and cuprous chloride solutions
Cupric and cuprous sulfate solutions
Cyclohexane
Dibutyl phthalate
Diethylene glycol
Dipropylene glycol
Ethylene glycol
Fatty acids
Ferric and ferrous chloride solutions
Fuel oil
Glycerine
Hydrochloric acid, 10%
Kerosene
Lactic acid
Magnesium chloride solutions
Magnesium sulfate solutions
Naphtha
Phosphoric acid, 10 and 20%
Propylene glycol
Sodium chloride solutions
Sulfite liquors
Sulfuric acid, 25%
Water

*Exposure temperature of 71°C (160°F)
**"solutions" indicates all concentrations

TABLE 4-4. THERMAL PROPERTIES OF POLYESTER CASTINGS*

PROPERTY	RIGID CASTING	RESILIENT CASTING
Heat defection temperature under 1.8 MPa load (264 psi), °C (°F)	194 (382)	140 (284)
Thermal expansion coefficient, temperature range, 10° to 52°C (50 to 125°F), cm/cm·°C (in/in.·°F)	6.3×10^{-5} (3.5×10^{-5})	

*Reinforced with fiberglass, 181 style fabric, silicone treated

MIL-P-43038B(MR), *Plastic Molding Material, Polyester, Low-Pressure Laminating, High-Temperature Resistant*

MIL-R-46068(MU), *Resin, Polyester, Bisphenol-A Type*

AMS 3827A, *Cloth, Type E-Glass "B" Stage Polyester Resin-Impregnated, 7781 Style Fabric, Flame-Resistant.*

4-3 EPOXY RESIN (THERMOSET)

Uncured epoxy resins contain one or more epoxide groups 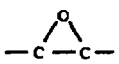 . By using these groups, the resin can be converted to a cured thermoset through reaction with appropriate curing agents. Epoxy resins are a broad type of resin that differs in properties and end uses (Ref. 6). The epoxy resins used as matrices in continuous fiber-reinforced composites can generally be classed as laminating resins.

4-3.1 EPOXY TYPES

There is a variety of epoxy formulations available for composite structures. The most common basic epoxy resin is derived from the reaction of bisphenol-A with epichlorohydrin. It is called the diglycidyl ether of bisphenol-A (DGEBPA or epi-bis types) (Ref. 7). American trademarks for this type resin include DER-332 (Dow) and Epon 828 (Shell). The general structure of the epoxy is shown in Fig. 4-2. Such epi-bis epoxies are liquid at room temperature, others have increased viscosity, and some are solids that melt at about 150°C (302°F). Generally, the higher the melting point of the epoxy, the less curing is needed. Cured properties of the various epi-bis resins are similar. However, toughness increases as the melting point of the unreacted epoxy is increased.

Novolac epoxies are made from the reaction of phenolic or cresol novolacs with epichlorohydrin. These resins show high viscosity or are semisolids, and they can be blended with other epoxies to improve handling characteristics. The novolac epoxies cure faster than epi-bis epoxies and show higher exotherms. The cured resins also have higher heat deflection temperatures than the epi-bis resins.

The cycloaliphatic epoxies contain a saturated ring in their structure. They do not contain chlorine, which may be present in some epi-bis epoxies. Cycloaliphatics have good weathering resistance, high heat deflection temperatures, and good retention of color with exposure or aging. Some of the cycloaliphatics show low viscosity. Anhydrides are typically used as curing agents for the cycloaliphatics. Some cycloaliphatics are reactive with amines, or they can be blended, i.e., a flexible with a rigid resin, to give a range of properties. Cost is about $3.30 to more than $22.00 per kg ($1.50 to more than $10.00 per lb).

4-3.2 EPOXY CURING MECHANISMS

Epoxy resins are converted to a cured thermoset form by chemical combination with curing agents or by the action of catalysts. Both curing mechanisms normally take place without the evolution of by-products. The temperatures at which curing reactions occur depend primarily on the specific curing agent or catalyst. Reactions can be initiated at ambient temperatures or they can require the addition of heat.

Optimum cure cycles for any epoxy system are determined empirically. The variables to be considered include the concentration of curing agents, accelerators, or catalysts; the time-temperature schedules for B-staging; initial cure and postcure; and the interaction of these factors. Normally, each resin property is optimized independently. After optimization the usual practice is to establish conditions that yield a desirable combination of properties.

4-3.3 CURING AGENTS FOR EPOXIES

Various curing agents are available for cross-linking epoxy resins. These agents are discussed here and listed according to chemical type. Although more than 150 curing agents are known, only 10 or so are widely used for over 90% of the volume. Specific curing agents are discussed in the paragraphs that follow.

Epoxy resins polymerize to hardened cross-linked, three-dimensional solids. This polymerization occurs by an addition or catalytic reaction. In the addition reaction, the curing agent (called the hardener) combines with the epoxy polymer molecular and acts as a cross-linking agent for binding epoxy molecules. This type of reaction is called heteropolymerization. With catalytic reactions, the self-polymerization of the epoxy is enhanced. This reaction is called homopolymerization.

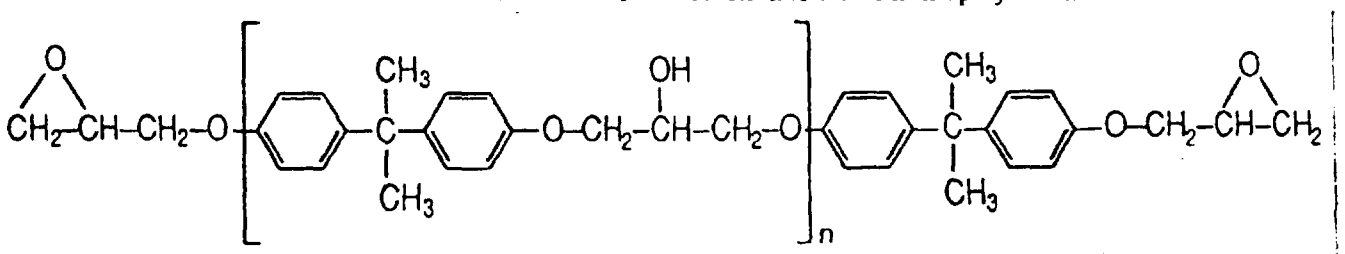

Figure 4-2. Epoxy Structure

4-3.3.1 Amine Curing Agents

Amines are used as curing agents for epoxies. These agents include aliphatic, aromatic, amine adduct, alicyclic, tertiary, and latent curing amines. The characteristics of such hardeners are shown in Table 4-6.

Aliphatic primary amines are reactive with conventional (glycidyl ether) and epoxy novolac resins at ambient temperature; consequently, these amines are not suitable for preimpregnated systems. Some examples of such amines are diethylenetriamine (DETA), triethylenetetramine (TETA) and tetraethylenepentamine (TEPA). Rapid cures at room temperature in 1 or 2 h are possible. With slight increase in temperature, 38° to 49°C (100° to 120°F), cures in about 5 min are possible.

Aromatic amines require curing at elevated temperatures. They are widely used in laminating and filament

TABLE 4-6. CHARACTERISTICS OF AMINE CURING AGENTS FOR EPOXY RESINS

Aliphatic Amines:

a. Used to cure epoxy resins at room temperature
b. High exothermic reaction of the curing agent with the epoxy
c. Cure rapidly with rapid mold cycles
d. Toxic, e.g., cause dermatitis
e. Short 15-30 min pot life
f. Moderately low heat distortion, 66° to 93°C (150° to 200°F)
g. Good wettability and adhesion
h. Careful mixing/weighing required
i. Some noxious odor
j. Liquid in form

Aromatic Amines:

a. Used to cure at elevated temperature
b. Some solid forms
c. 4-6 h pot life
d. Heat distortion 121° to 160°C (250° to 320°F)
e. Electrical properties better than with aliphatic hardeners
f. Brittle, may crack

*Amine Adducts:**

a. Similar to aliphatic amines in characteristics
b. Adducts give convenient increase in ratio of hardener/epoxy
c. Cure time lengthened

Alicyclic Amines:

a. Used for heat cures with epoxies
b. Long pot life, 8 h
c. Used with fillers/modifiers for potting, etc.
d. Toxic and skin irritant

Tertiary Amines:

a. No available hydrogen atom
b. Fast reactivity with heat
c. Short pot life
d. Used to catalyze anhydride curing agents
e. Toxic and skin irritant

Latent Curing Agents:

a. Allow for 1 part epoxy system
b. Long shelf life, e.g., 0.5 to 1 yr
c. Cured with heat in several hours
d. Electrical properties may be lowered

*Formed from reaction of aliphatic amine with nonstoichiometric fraction of butyl or phenyl glycidyl ether.

winding formulations. The more common aromatic diamines are metaphenylene diamine (MPDA), methylene dianiline (MDA), and diamine diphenylsulfone (DDS). The ability of these materials to effect cure to a dry B stage makes them useful for prepregs. The commercial aromatic diamines are solids at room temperature and require melting prior to mixing with the resin. Liquid versions are available as proprietary eutectic mixtures, adducts, or solutions. In some cases, accelerators are used to reduce cure time. Final aromatic, amine-cured epoxies generally have higher deflection temperatures and better chemical resistance than epoxies cured with aliphatic amines.

Tertiary amines act as sole curing agents, cocuring agents, or accelerators. As sole curing agents, they react with liquid ether resins upon the addition of heat. Benzyldimethylamine (BDMA) is frequently used as an accelerator in laminating formulations.

Boron trifluoride (BF_3) is the most commonly used curing agent of the latent catalyst/curing agent type. Normally, the catalyzed resin is gelled at about 121°C (250°F) to reduce exotherm and is given postcure to develop optimum properties. BF_3 is very highly reactive in the catalytic cure of epoxies and is impractical to handle for controlled reactions. Thus BF_3 is supplied as latent catalysts or modified complexes to reduce vapor pressures and/or toxicity and to extend pot lives. Such complexes include (1) boron trifluoride-monoethylamine complex (BF_3MEA), (2) boron trifluoride-aniline complex, (3) boron trifluoride-monoethanolamine complex, and (4) boron trifluoride-trimethylamine complex.

Dicyandiamide (DICY), an amide, is used with solid ethers of bisphenol-A where it is latent at ambient temperatures and gives rapid cure at elevated temperatures.

Table 4-7 is a general summary of amine curing agents and their designations.

4-3.3.2 Acid Anhydride Curing Agents

Dicarboxylic acids, such as the anhydrides, open up an epoxy ring and become part of the cross-linked structures as an ester linkage. Compared with amine-cured systems, the anhydride-cured resins show better thermal resistance, higher distortion temperatures (149°C (300°F), which is about 42 to 50 deg C (75 to 100 deg F) higher than amine-cured resins), and improved electrical properties. Low dielectric constants (2.8 to 3.0) can be attained.

TABLE 4-7. AMINE CURING AGENTS USED WITH EPOXIES

TYPE	DESIGNATION
Aliphatic Amines:	
a. Diethylenetriamine	DETA
b. Triethylenetetramine	TETA
c. Hexamethylenediamine	HMDA
d. Silicone amine	—
Aromatic Amines:	
a. Metaphenylene diamine	MPDA
b. Diamine diphenylsulfone	DDS
c. Methylene dianiline	MDA
Amine Adducts:	
a. Diethylaminopropylamine	DEAPA
b. Olefin oxide-polyamines	—
c. Glycidyl ether-polyamines	—
Alicyclic Amines:	
a. Piperidine	—
b. N-aminoethyl piperazine	AEP
Tertiary Amines:	
a. Triethylamine	TEA
Latent Catalysts/Curing Agents:	
a. Boron trifluoride-monoethylamine complex	BF_3MEA
b. Boron trifluoride-monoethanolamine complex	—
c. Dicyandiamide	DICY

Anhydrides are used from 30 to 140 parts per hundred resin (phr). Accelerators or catalysts are usually needed. With 0.1- to 5-phr tertiary amine as a catalyst, epoxy compositions can be formulated that are stable to 12 h at room temperature, have a low viscosity, and can be cured at 121°C (250°F). If the epoxy contains more hydroxy than epoxy groups, i.e., solid bisphenol-A types, the higher hydroxy content can initiate the reaction without use of a tertiary amine catalyst. These systems have a comparatively low peak exotherm, and skin irritation is minimized. Liquid forms of anhydride-containing epoxies exist that have a pot life of about two months at 25°C (77°F). Chlorinated or brominated anhydrides are used for flame-retardant compounds. A commonly used agent is chlorendic anhydride (CA or HET); it is highly reactive and does not require the use of an accelerator.

Table 4-8 gives information on the types and designations of commonly used anhydride curing agents.

4-3.4 PROPERTIES OF EPOXY RESINS

Epoxies are the most important resins for the fabrication of continuous fiber-reinforced composites because they are easy to handle and they enjoy a broad use range in the majority of extreme environments and good bonding to many materials. Epoxy resins have high tensile, compressive, and flexural strength; high impact resistance; and high heat resistance. They are resistant to a very large number of acids, caustics, and solvents. Epoxies also exhibit very low shrinkage during cure because they react with their hardening agents by direct addition, i.e., without the evolution of water or volatile by-products. A very large number of epoxies and their variants exist (Ref. 8). Variants in processing and end product properties are marketed; cured epoxies are available in rigid and flexible forms. Flame-retardant compounds are also available. Properties of epoxy resins are discussed in the paragraphs that follow.

TABLE 4-8. ANHYDRIDE CURING AGENTS USED WITH EPOXIES

TYPE	DESIGNATION
Aliphatic:	
a. Dodecenylsuccinic*	DDSA
b. Polysebacic	PSPA
Aromatic:	
a. Phthalic anhydride	PA
b. Trimellitic	TMA
c. Nadic methyl*	NMA
d. Tetrahydrophthalic	THP
e. Pyromellitic	PMDA
Alicyclic:	
a. Hexahydrophthalic*	HHPA
b. Chlorendic	CA or HET

*Very commonly used because of handling ease.

4-3.4.1 Mechanical Properties

The mechanical properties of epoxy resin vary widely depending on formulation and cure cycle and range from brittle to very tough. Most composite structures use the more rigid, high-temperature resins. Due to their characteristics they are the most widely used in structural applications requiring high strength.

Tensile, compressive, and flexural properties of representative epoxy cast systems are shown in Table 4-9.

4-3.4.2 Electrical Properties

The dielectric constant and loss tangent for conventional cast epoxy with two curing agents are shown in Table 4-10. As indicated, the dielectric constant increases as the test temperature is increased. When fiberglass is used as a reinforcement, the composite dielectric strength is higher and the loss tangent is lower than for the resin alone. Laminate electrical properties as specified in MIL-R-9300 (Ref. 10) are summarized in Table 4-11.

4-3.4.3 Thermal Properties

The thermal stability of an epoxy can be evaluated by thermogravimetric analysis (TGA), differential thermal analysis (DTA), or other techniques. Conventional epoxy and epoxy novolacs subjected to TGA show rapid decomposition at approximately 300°C (572°F) in a vacuum and in an oxygen atmosphere. The total decomposition upon reaching 900°C (1652°F) varies with resin type and curing agent and ranges from 50 to 80%; epoxy novolacs show the lowest losses.

The thermal conductivity k of epoxy resins varies with resin type and the amount and types of curing agent. Normal ranges are from 0.15 to 0.19 W/(m·K) (0.085 to 0.110 (Btu·ft)/(h·ft^2·°F)).

The coefficient of thermal expansion of an epoxy depends upon resin type, curing agent, and the amount of curing agent. For temperatures of −54° to approximately 104°C (−65°F to approximately 220°F), it varies from 59.4×10^{-6} to 70.2×10^{-6} cm/cm·°C (33×10^{-6} to 39×10^{-6} in./in.·°F).

4-3.4.4 Flammability

Epoxy resins are not flame-retardant and require the addition of chlorinated curing agents or brominated polymers to acquire flame-resistant characteristics. Antimony trioxide is usually added to the system in conjunction with these materials. These modifications result in some decrease in mechanical properties, but the decrease depends on the percentage of additives used in the system (Ref. 11).

TABLE 4-9. TYPICAL PROPERTIES OF AMINE CURED EPOXY RESINS (Ref. 9)

RESIN/CURING AGENT	EPON 828/MPDA	DEN 438/MDA	ERLA 2772/MPDA
COMPOSITION	100/14.6	100/28	100/14
Tensile strength, MPA (ksi)	69-89.6 (10.0-13.0)	65.5 (9.5)	88.2 (12.8)
Tensile modulus, MPa (ksi)	31.7 (4.6)	31.0 (4.5)	32.4 (4.7)
Tensile elongation, %	2.5-6.5	3.1	3.2
Compressive strength, MPa (ksi)	128.2 (18.6)	—	136.5 (19.8)
Compressive modulus, MPa (ksi)	28.3 (4.1)	—	30.3 (4.4)
Compressive elongation (yield), %	—	—	11.0
Flexural strength, MPa (ksi)	141.3 (20.5)	434.4 (63)	—
Flexural modulus, MPa (ksi)	32.4 (4.7)	29.7 (4.3)	—
Flexural elongation, %	—	6.4	—

NOTE: EPON = epoxy of Shell Chemical Company
DEN = epoxy of Dow Chemical Company
ERLA = epoxy of Union Carbide Company

TABLE 4-10. DIELECTRIC CONSTANT AND LOSS TANGENT FOR EPON 828 EPOXY RESINS

RESIN/CURING AGENT	EPON 828/MPDA	EPON/BF_3MEA
COMPOSITION	100/14	100/3
Dielectric constant, 10 GHz, dry, dimensionless		
at 24°C (75°F)	3.85	3.20
at 100°C (212°F)	4.30	3.25
at 149°C (300°F)	4.60	3.30
Loss tangent, 10 GHz, dry, dimensionless		
at 24°C (75°F)	0.038	0.024
at 100°C (212°F)	0.020	0.015
at 149°C (300°F)	0.015	0.012

TABLE 4-11. ELECTRICAL REQUIREMENTS FOR EPOXY AND POLYESTER LAMINATES (Ref. 10)

STANDARD CONDITION*		
EPOXY	DIELECTRIC CONSTANT, dimensionless	LOSS TANGENT (MAX), dimensionless
Grade A	3.6-4.0	0.020
Grade B	4.0-4.2	0.020
Grade C	4.2-4.4	0.020
Grade D	4.4-4.6	0.020

IMMERSION CONDITION
Dielectric constant shall not exceed the standard condition by more than 5%. Loss tangent has 0.025 maximum for all grades.

HIGH TEMPERATURE
Dielectric constant shall not vary from the standard condition by more than ± 3.0%. Loss tangent has 0.045 maximum for all grades.

*The recommended test frequency is 9.375 GHz

4-3.5 EPOXY SPECIFICATIONS

Some of the specifications that cover requirements for epoxy and related materials used as composites are

MIL-R-9300B, *Resin, Epoxy, Low-Pressure Laminating*

MIL-P-25421, *Plastic Materials, Glass Fiber Base, Epoxy Resin, Low-Pressure-Laminated*

MIL-M-46861, *Molding Material, Glass Mat, Epoxy-Coated*

MIL-M-46862, *Molding Material, Glass, Epoxy-Impregnated*

MIL-G-46887, *Glass Roving, Resin-Impregnated*

MIL-F-47078, *Fabric, Glass, Epoxy-Resin-Impregnated*

MIL-L-52696, *Laminating Resin*

AMS 3821A, *Cloth, Type E-Glass, B Stage, Epoxy-Resin-Impregnated, 7781 Style Fabric, Flame-Resistant*

AMS 3828B, *Glass Roving, Epoxy-Resin-Preimpregnated, Type E-Glass*

AMS 3832A, *Glass Roving, Type S-Glass, Epoxy-Resin-Impregnated*

AMS 3867A, *Boron Filament Tape, Epoxy-Resin-Impregnated*

AMS 3894C, *Carbon (Graphite) Fiber Tape and Sheet, Epoxy-Resin-Impregnated*

AMS 3903A, *Cloth, Organic Fiber (Para-Aramid), High-Modulus, Epoxy-Resin-Impregnated*

AMS 3906, *Glass Fiber Nonwoven Tape and Flat Sheet, Epoxy-Resin-Impregnated, for Hand and Machine Lay-Up.*

4-4 PHENOLIC RESIN (THERMOSET)

Phenolic resins, the structure of which is shown in Fig. 4-3, are derived from the condensation products of phenols, and phenolic materials and aldehydes. These reagents are primarily phenols and formaldehyde. The chemical nature and ratio of the phenol and aldehydes used, the type and quantity of catalyst, and the time and temperature of the reaction determine the characteristics of the phenolic resin (Ref. 12).

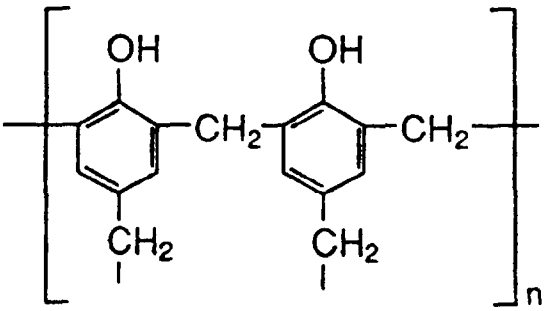

Figure 4-3. Phenolic Structure

4-4.1 PHENOLIC TYPES

Phenolics for continuous fiber-reinforced plastic composites are supplied as laminating varnishes or as preimpregnated fabrics. The varnishes are solutions of partially reacted resins in ethyl alcohol or isopropyl alcohol. The amount of solids in the varnish normally ranges from 60 to 65%. The prepregged fabrics are coated with a varnish and are dried to remove the major portion of the alcoholic solvent.

Phenol-formaldehyde resins are classified as "one step" or "two step", depending on the proportion of phenol to formaldehyde and the type of catalyst in the initial condensation reaction. The one-step, or resole, resins are reacted at a higher mole ratio of formaldehyde and are alkaline catalyzed. The two-step, or novolac, resins are reacted with an excess of phenol and acid catalysts. Conversion to a cross-linked thermoset requires the addition of formaldehyde and a catalyst. Hexamethylenetetramine (HEXA), which breaks down into formaldehyde and ammonia, is added to the novolac for this purpose.

The mole ratio of formaldehyde to phenol may be as high as 2.5 to 1 in one-step resins. For the laminating varnishes the mole ratio is generally about one-to-one. For two-step resins the ratio changes from 0.80 to 0.90 moles of formaldehyde to 1 mole of phenol.

In resole types, formaldehyde reacts initially at either the ortho or para position to form methylol ($-CH_2OH$) groups. The methylol groups then condense with an ortho or para hydrogen, release water, and form methylene ($-CH_2-$) linkages. Below 121°C (250°F) reactions predominate that lead to polymer chain growth and the elimination of water. In the range of 138° to 199°C (280° to 390°F), which includes the curing and postcuring temperatures, reactions are characterized by a reduction in methylol groups and increased cross-linking. Novolac reactions result in structures similar to the resoles and also contain methylene linkages. The major structural differences are that resoles are methylol terminated, whereas the novolacs are phenol terminated (Ref. 13).

Other phenolic types used in aerospace applications include the phenyl-silanes (copolymers of silicone and phenol with formaldehyde) and the furanes (condensates of phenol with furfural derivatives).

4-4.2 PROPERTIES OF PHENOLIC RESINS

Phenolic resins are noted for their high heat resistance, chemical resistance, dielectric properties, surface hardness, dimensional and thermal stability, and relatively low cost. They are used in large volumes in short fiber molding compounds. For continuous fiber composites, phenolics are primarily available in prepregged fabric form with fiberglass, carbon-graphite, and aramid fibers. These preimpregnated forms are used mainly for secondary structures in military applications for which

sustained high temperature resistance to 260° C (500° F) is needed. Their various properties are described in the paragraphs that follow.

4-4.2.1 Mechanical Properties

Phenolic resins are used predominantly in molding compounds and with fillers or reinforcements. Unfilled, general-purpose grades are available and typical properties are listed in Table 4-12. Phenolics are strong, stiff, and brittle; these properties account for the broad use of fillers. Phenolics have found some use with continuous reinforcements, principally in applications requiring high temperature resistance and stability.

4-4.2.2 Thermal Properties

The thermal conductivity k of unreinforced phenolic resin is approximately 0.21 W/(m·K) (0.12 (Btu·ft)/(h·ft^2·° F)) at 24° C (75° F) and increases to 0.28 W/(m·K) (0.16 (Btu·ft)/(h·ft^2·° F)) at 316° C (600° F). Mineral-filled compounds have thermal conductivities of approximately 0.45 W/m·K (0.26 (Btu·ft)/(h·ft^2·° F)). The coefficient of thermal expansion for unreinforced phenolic resin is approximately 59×10^{-6} cm/(cm·° C) (33×10^{-6} in./(in.·° F)) over a temperature range of −52° to 71° C (−61° to 160° F).

With regard to thermal stability, pyrolysis and oxidation resistance are major considerations with phenolics because of their widespread application in ablative and heat resistant applications. Pyrolysis in a nonoxidative environment is unrelated to oxidative degradation, and thermochemical reactions are different for each condition. Thermograms for well-cured resins indicate that the maximum weight loss in a vacuum or in inert atmospheres is approximately 45% at 900° C (1652° F), whereas at 1200° C (2192° F) the weight loss is 48%. The weight loss decreases and the char yield increases with increased cross-link density and cure. Up to 343° C (650° F) the major chemical changes in pyrolysis involve the release of water occluded during the curing process or from continued cross-linking. Above this temperature, however, the water that appears is from thermal breakdown of hydroxyl groups. From 343° to 843° C (650° to 1550° F) the decomposition consists of several complex reactions resulting in the elimination of hydrogen, methane, carbon monoxide, phenol, cresol, and xylenol. Degradation by oxygen appears to be a surface phenomenon and can occur during the curing process. Improved stability may be achieved by surface protection and by curing in nonoxidative environments. High-temperature postcures also lead to improved stability. Thermograms in air exhibit a rapid onset of degradation beginning at about 316° C (600° F) with 100% weight loss at about 566° C (1050° F). Generally, there appear to be no significant differences in the thermochemical behavior of one-step or two-step phenolics when these resins are compared at equivalent methylene contents.

TABLE 4-12. TYPICAL PROPERTIES OF PHENOLIC RESIN

Specific gravity	1.28
Service temperature, ° C (° F)	150-230 (300-450)
Heat deflection temperature at 1.8 MPA (264 psi), ° C (° F)	120-315 (250-600)
Resin content, %	100
Ultimate tensile strength, MPa (ksi)	55 (8)
Tensile modulus, GPa (10^3 ksi)	8 (1.2)
Ultimate flexural strength, MPa (ksi)	69 (10)
Ultimate compressive strength, MPa (ksi)	207 (30)

4-4.2.3 Flammability

Phenolics, in general, are flame-retardant. Some formulations are self-extinguishing, based on standard laboratory test methods.

4-4.2.4 Chemical Resistance

The chemical resistance of phenolic resins is influenced by the formulation, processing conditions, and the temperature and concentration of the chemical solution. Generally, phenolics resist the action of weak acids very well. The same can be said for weak alkalies and organic solvents. Phenolics have a poor resistance to strong alkalies and are decomposed by strong oxidizing acids. Reaction with an alkylene oxide and alloying with an epoxy or a furfural alcohol resin improve their resistance to alkalies.

4-4.3 PHENOLIC SPECIFICATIONS

Some of the specifications that cover requirements for phenolic and similar materials used as composites are

MIL-R-3745, *Resin, Phenol-Formaldehyde, Laminating*

MIL-R-9299C, *Resin, Phenolic, Laminating*

MIL-P-25515C, *Plastic Materials, Phenolic Resin, Glass Fiber Base, Laminated*

MIL-F-46885, *Fabric, Glass, Phenolic-Resin-Impregnated*

MIL-F-47018A, *Fabric, High Silica, Phenolic-Resin-Impregnated, (Unfilled)*

ASTM D709-87, *Laminated Thermosetting Materials.*

4-5 SILICONE RESIN (THERMOSET)

Silicone resins are characterized by a polymeric structure containing alternating silicon and oxygen atoms (siloxane bond) and having two organic groups attached to each silicon atom. The structure is shown in Fig. 4-4. Chain growth and cross-linking reactions take place through the siloxane linkage. The organic groups normally are simple alkyl, aryl, or vinyl radicals. The resins for laminating are synthesized from a mixture of monomers and contain both methyl and phenyl groups attached to the silicon (Ref. 14).

4-5.1 SILICONE TYPES

Silicone laminating resins are supplied as toluene solutions of partially reacted resins. These varnishes can be dried to tack-free solids and are suitable for pre-impregnating purposes. Low-pressure molding grades can be cured by the usual vacuum or autoclave processes at pressures below 345 kPa (50 psi). High-pressure grades are cured at pressures ranging from 2068 to 10,342 kPa (300 to 1500 psi). Costs are about $13.20 to $17.60 per kg ($6.00 to $8.00 per lb).

4-5.2 CURING OF SILICONES

The curing of silicones is a condensation reaction involving residual silanol (—Si—OH) groups and results in the formation of water. Silicones are capable of self-curing, but the reactions are best controlled by catalysts. Amines, such as triethanolamines, or organometallic salts, such as naphthenates and octoates of zinc, iron, cobalt, and lead, are typical catalysts for curing reactions. Cure temperatures range from 177° to 232°C (350° to 450°F), and postcuring is generally required to develop optimum high-temperature properties (Ref. 15).

4-5.3 PROPERTIES OF SILICONE RESINS

Silicone resins are characterized by high temperature stability; resistances to water, weathering, and oxidation; and very good electrical properties. Some general properties of unreinforced silicones are shown in Table 4-13. Although earlier interest in silicone composites was evidenced (Ref. 13), current use is very limited to special applications requiring high temperature and electrical characteristics. Preimpregnated reinforcements with silicone resins are not readily available. Specific properties are presented in the paragraphs that follow.

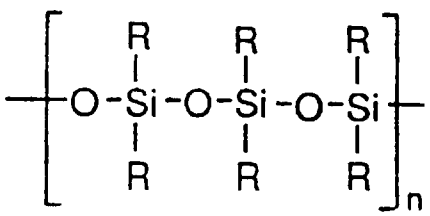

Figure 4-4. Silicone Structure

TABLE 4-13. GENERAL PROPERTIES OF UNFILLED SILICONE RESINS

Specific gravity, dimensionless	1.69-1.9
Tensile strength, MPa (psi)	27.6-34.5 (4,000-5,000)
Compressive strength, MPa (psi)	62.1-103.4 (9,000-15,000)
Flexural strength, MPa (psi)	62.1-96.5 (9,000-14,000)
Heat resistance, °C (°F)	232-260 (450-500)
Heat distortion, °C (°F)	260-482 (500-900)
Water absorption, 24 h, %	0.2-0.5
Dielectric strength, kV/mm (V/mil)	4.9-11.8 (125-300)
Dielectric constant, 10^6 Hz, dimensionless	4.1-5.3
Dissipation (power) factor, 10^6 Hz, dimensionless	0.010-0.030
Arc resistance, s	250-350
Chemical resistance	fair to excellent

4-5.3.1 Mechanical Properties

The tensile, compressive, and flexural strengths of silicone resins and laminates are lower than those of polyesters, epoxies, and phenolics. The silicones, however, retain a greater percentage of their initial strengths at elevated temperatures and may be exposed for long periods at these temperatures with less degradation. For example, at 260°C (500°F) after 0.5 h exposure, silicone fiberglass laminates retain about 40% of their initial strength. After 25,000 h at 274°C (525°F), the laminates retain from 20 to 25% of their room temperature flexural strength (Ref. 16).

4-5.3.2 Electrical Properties

Due to an inherent stability and to the fact that no carbon residue is produced, silicone resins exhibit superior electrical properties at elevated temperatures and after exposure for long periods at those temperatures (Ref. 17).

4-5.3.3 Thermal Stability

Silicone resins are relatively stable at elevated temperatures and have lower weight losses compared to other resins. The residue after burning is silicon dioxide. Vacuum pyrolysis indicates a loss of 13% by volatilization at 800°C (1470°F), which increases to 17% at 1200°C (2190°F). Comparable results for a phenolic resin are 44% and 48%, respectively.

4-5.4 SILICONE SPECIFICATIONS

Some of the specifications that cover requirements for silicone and related materials used as composites are

MIL-P-997D, *Plastic Material, Laminated, Thermosetting, Electrical Insulation, Sheets, Glass Cloth, Silicone Resin*

MIL-R-25506C, *Resin Solution, Silicone, Low-Pressure Laminating*

MIL-P-25518B, *Plastic Materials, Silicone Resin, Glass Fiber Base, Low-Pressure Laminated*

ASTM D709-87, *Laminated Thermosetting Materials.*

4-6 POLYIMIDE RESIN (THERMOSET, THERMOPLASTIC)

The polyimide resin family includes those polymers, either thermoset or thermoplastic, incorporating the imide group, $-\underset{\underset{O}{\|}}{C}-N-\underset{\underset{O}{\|}}{C}-$, in the polymer chain derived from aromatic acids. The polyimide structures are characterized by their outstanding thermal-oxidative stability. The basic polyimide structure, in generalized form, is shown in Fig. 4-5, in which R and R′ are aliphatic or aromatic groups derived from the reaction of a dianhydride and diamine (Ref. 18).

4-6.1 POLYIMIDE TYPES

A variety of polyimides is available today as homopolymers and modifications with amide and ester moieties. The polyimides are synthesized from various diamine and dialdehydes to produce both condensation- and addition-type thermosets and thermoplastics with aliphatic, aliphatic-aromatic, and all aromatic structures. Commercial polyimides for lamination are supplied as preimpregnated (B staged) or as resin solutions for impregnation. The solutions contain polyimide precursor material that, upon application of heat, produces addition- or condensation-type polyimides (Ref. 19). Polyimide resins cost about $11.00 to $17.65/kg ($5.00 to $8.00/lb).

4-6.1.1 Polymerization Mechanisms

Thermoset polyimides are synthesized by a two-stage condensation or addition method. In the first stage precursors, such as polyamide acids, polyamide acid salts, or polyamide acid esters, are prepared from the reaction products of diamines with dianhydrides in solvents. In the second stage of a condensation polyimide, the precursors are thermally or chemically dehydrocyclized to produce insoluble, infusible polymers, with the evolution of volatile by-products, such as water, alcohol, or acids and gases.

Addition-type polyimides are synthesized by end capping polyamide acid prepolymers, e.g., with nadic anhydride (Ref. 20). The varnish is supplied as a solids solution in solvents, such as dimethyl formamide (DMF). Curing occurs in the second stage by addition reactions of the nadic end group during heating between 246° to 302°C (475° to 575°F) to form alicyclic polyimides without the evolution of volatile by-products (Ref. 21).

In another technique mixtures of MDA with the bismaleimide of methylene dianiline prepolymers extend and cross-link without volatiles by addition upon thermal treatment to produce polyamide-imide with a structure, as shown in Fig. 4-6, that is not fully aromatic.

A more recent additive-type polyimide involves in situ polymerization of monomeric reactants dissolved in low boiling alkyl alcohol. Curing is accomplished by the catalytic trimerization of aromatic nitrile-terminated imide oligomers with heat and pressure. Trimerization has been accomplished with a p-toluenesulfonic acid catalyst.

Several high molecular weight, soluble, aromatic thermoplastic, fully polymerized, fully imidized resins are available. Curing is merely a process of solvent removal. Reported solvents are N-methyl-2-pyrrolidone, dimethylsulfoxide or N,N-dimethylformamide (Ref. 22).

Poly(ester-imides) can be prepared by reaction of bis(ester-anhydrides) derived from trimellitic anhydride with aromatic diamines. The reaction initially yields the amide-acid intermediate, which, upon conversion, yields the poly(ester-imide).

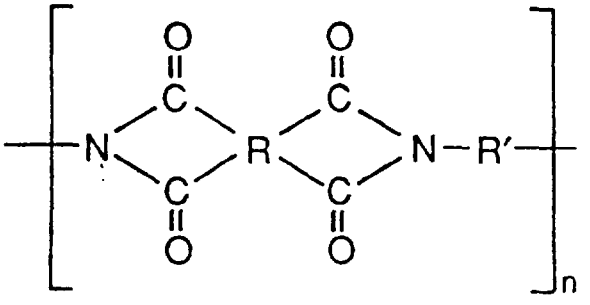

Figure 4-5. Polyimide Structure

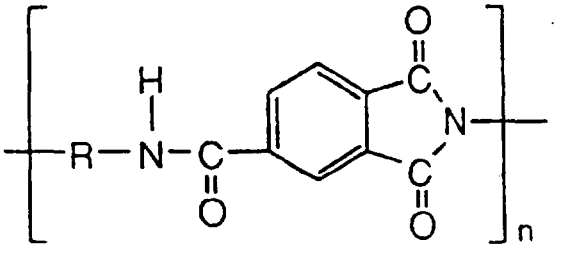

Figure 4-6. Polyamide-imide Structure

4-6.1.2 Effect of Structure on Properties and Processing

Polyimide resins are known for outstanding thermal-oxidative stability, high-temperature mechanical and electrical properties, and radiation and solvent resistance. These properties are attributed to the fused ring nature of the aromatic materials that constitute the structure of the polyimides. The ring structures induce an extremely high degree of rigidity to the polymer chain and, in return, are responsible for a high glass transition temperature (Tg). This high Tg permits structural properties at high temperatures. Therefore, the most stable polymers are the condensation-type, fully aromatic, cross-linked, main-chain structures. The introduction of aliphatic links into the main or side chains results in a reduction of the high-temperature properties.

Unfortunately, the polymer chain stiffness in the cross-linked condensation polyimides that affords 260° to 370°C (500° to 700°F) physical properties also presents processing constraints. The condensation reactions employed to build macromolecular polyimides can result in laminates with high void content and poor flow characteristics. The reactions also require tedious high-temperature, high-pressure, and long postcuring fabrication techniques.

Although they have slightly reduced properties, addition-type polyimides are preferred because they produce no volatiles during cure. Addition polyimides using bismaleimide technology are the basis for a number of commercially available resins used for continuous fiber composites.

The thermoplastic polyimides become rubbery at their Tg; thus they retain high tensile strength and elongation even at high temperatures. Because the resins are linear and amorphous, they have significantly higher toughness than the thermosetting-type systems.

The modified polyimides, such as those incorporating amide linkages, have improved processability but suffer a loss of strength at elevated temperatures.

Polyimides can be laminated by conventional vacuum, augmented vacuum, and press molding methods by using dry lay-ups. Close control of prepreg properties, B staging, curing, and postcuring is necessary to insure production of high quality laminates. Prepregs undergo a rapid decrease in flow at temperatures from 107° to 200°C (225° to 392°F), at which point residual solvents are volatilized. Initial cures take place at temperatures from 149° to 200°C (300° to 392°F). Postcures at 316° to 371°C (600° to 700°F) are required to attain optimum properties.

Because of the high-temperature characteristics of the polyimides, research continues to provide variations that improve both properties and processing characteristics (Ref. 23). This has led to a number of commercially available prepregged composites for fiberglass and carbon-graphite reinforcements.

4-6.2 PROPERTIES OF POLYIMIDES

Polyimides are characterized by high heat resistance, good wear resistance, low friction, chemical inertness, low outgassing, stability under radiation and cryogenic conditions, and inherent nonflammability. These properties for representative materials are discussed in the paragraphs that follow.

4-6.2.1 Mechanical Properties

A condensation-type polyimide of the aromatic thermoplastic type is produced by DuPont under the designation NR-150B2 and the trade name Avidmid N (Ref. 23). Some typical mechanical properties of NR-150B2 and a variation, NR-150A2, are shown in Table 4-14. Other variants of the aromatic thermoplastic are marketed by CIBA-GEIGY under the trade name Matrimid (5218) and by the Dow Chemical Company as Polyimide 2080; both are available in various solution forms.

A number of addition-type polyimides are available commercially for continuous fiber composites (Ref. 24). The properties of one prominent resin, designated PMR-15, are shown in Table 4-15. PMR-15 has been used in a number of diverse military structural composites.

The mechanical properties of a thermoplastic unreinforced polyamide-imide molding material are given in Table 4-16. Numerous grades of the polyamide-imide produced are available reinforced with fiberglass, graphite, and aramid fibers for molding compounds. There has been little use for continuous fiber composites.

4-6.2.2 Electrical Properties

Tables 4-17 and 4-18 present some data on the electrical properties of a thermoplastic polyimide and a polyamide-imide.

4-6.2.3 Thermal Properties

Table 4-19 provides data on thermal aging of NR-150 polyimide resins. Some thermal properties of polyamide-imide molding compound are given in Table 4-20.

4-6.2.4 Chemical Properties

Polyamide-imides are virtually unaffected by aliphatic and aromatic hydrocarbons, most acids, and alkaline solutions. They are, however, attacked by high-temperature caustic and some high-temperature acid systems.

TABLE 4-14. PHYSICAL AND MECHANICAL PROPERTIES OF POLYIMIDE NR-150 RESIN

PROPERTY	VALUES	
	NR-150A2	NR-150B2
Tg, °C (°F)	280-300 (536-572)	350-371 (662-700)
Density, g/cm^3 (lb/in.^{3})	1.4 (0.05)	1.4 (0.05)
Flexural strength, MPa (psi)	97.2 (14,100)	117.2 (17,000)
Tensile strength, MPa (psi)	110.3 (16,000)	110.3 (16,000)
Elongation, %		
Room temp	8	6
260°C (500°F)	69	—
316°C (600°F)	—	65
Izod impact, notched, J/m (ft·lb/in.)	37.4 (0.7)	42.7 (0.8)

From the *Proceedings of the Second International Polyimide Conference*, Ellenville, NY, 30 October-1 November 1985. Copyright © by Society of Plastics Engineers, Brookfield Center, CT.

TABLE 4-15. PHYSICAL AND MECHANICAL PROPERTIES OF POLYIMIDE PMR-15 RESIN

PROPERTY	VALUE
Specific gravity, dimensionless	1.32
Flexural strength at 25°C (77°F), MPa (ksi)	176 (25.5)
Flexural modulus at 25°C (77°F), MPa (10^6 psi)	4.0 (0.58)
Tensile strength at 25°C (77°F), MPa (ksi)	38.6 (5.6)
Tensile modulus at 25°C (77°F), MPa (10^6 psi)	3.9 (0.57)
Elongation at failure at 25°C (77°F), %	1.5

From the *Proceedings of the Second International Polyimide Conference*, Ellenville, NY, 30 October-1 November 1985. Copyright © by Society of Plastics Engineers, Brookfield Center, CT.

TABLE 4-16. PHYSICAL AND MECHANICAL PROPERTIES OF TORLON®* 4203L POLYAMIDE-IMIDE RESIN

PROPERTY	VALUE
Physical:	
a. Density, g/cm^3 (lb/in.^{3})	1.42 (0.05)
b. Water absorption, %	0.33
Mechanical:	
a. Tensile strength, break at 23° C (73°F), MPa (psi)	192 (27,800)
b. Tensile modulus at 23°C (73°F), GPa (10^6 psi)	4.9 (7.0)
c. Elongation, break at 23°C (73°F), %	15
d. Flexural strength, break at 23°C (73°F), MPa (psi)	244 (34,900)
e. Flexural modulus, at 23°C (73°F), GPa (10^6 psi)	5.0 (0.73)
f. Compressive strength, at 23°C (73°F), MPa (psi)	220 (32,100)
g. Compressive modulus, at 23°C (73°F), GPa (psi)	4.0 (580,151)

*Torlon® is a registered trade name of the Amoco Chemicals Corporation.

TABLE 4-17. ELECTRICAL PROPERTIES OF NR-150A POLYIMIDE RESIN*

TEMPERATURE	DIELECTRIC CONSTANT, dimensionless	LOSS TANGENT, dimensionless
21.7°C (71°F)	2.914	0.0016
107.2°C (225°F)	2.921	0.0025
190.6°C (375°F)	2.909	0.0042
218.3°C (425°F)	2.878	0.0066

*Measurements made at 9.375 GHz.

TABLE 4-18. ELECTRICAL PROPERTIES OF TORLON®* 4203L POLYAMIDE-IMIDE RESIN (Ref. 25)

PROPERTY	TYPICAL VALUES
Dielectric constant, dimensionless	
at 10^3 Hz	4.2
at 10^6 Hz	3.9
Dissipation factor, dimensionless	
at 10^3 Hz	0.026
at 10^6 Hz	0.031
Volume resistivity, ohm· m (ohm·in.)	2×10^{15} (8×10^{16})
Surface resistivity, ohms	5×10^{18}
Dielectric strength, kV/mm (V/mil)	23.6 (580)
Arc resistance, s	125

*Torlon® is registered trade name of the Amoco Chemicals Corporation.

TABLE 4-19. AIR OVEN AGING OF POLYIMIDE NR-150 RESIN

RESIN BINDER	AGING CONDITIONS		TENSILE STRENGTH* MPa (psi)	WEIGHT LOSS %
	HOURS	TEMPERATURE °C (°F)		
NR-150A**		Unaged	105.5 (15,300)	—
	8760 (1 yr)	260 (500)	76.5 (11,100)	2.1
NR-150B		Unaged	114.5 (16,600)	—
	100	371 (700)	43.4 (6,300)	2.3
NR-150C		Unaged	120 (17,400)	—
	1000	316 (600)	82.7 (12,000)	4.9

*Properties measured at room temperature before and after aging
**Aging studies actually carried out on medium molecular weight melt viscosity stable form of NR-150A

From the *Proceedings of the Second International Polyimide Conference*, Ellenville, NY, 30 October-1 November 1985. Copyright © by Society of Plastics Engineers, Brookfield Center, CT.

TABLE 4-20. THERMAL PROPERTIES OF TORLON®* 4203 POLYAMIDE-IMIDE RESIN

PROPERTY	VALUE
Deflection temperature, at 1820 kPa (264 psi), °C (°F)	274 (525)
Cofficient of linear thermal expansion, cm/cm·°C (in./in.·°F)	3.6×10^{-5} (2.0×10^{-5})
Thermal conductivity, W/(m·K) (Btu·in./(h·ft²·°F))	0.25 (1.7)

*Torlon® is a registered trade name of the Amoco Chemicals Corporation.
From the *Proceedings of the Second International Polyimide Conference*, Ellenville, NY, 30 October-1 November 1985. Copyright © by Society of Plastics Engineers, Brookfield Center, CT.

4-6.3 POLYIMIDE SPECIFICATIONS

Some specifications that cover requirements for polyimides and related materials used as composites are

MIL-P-13949G, *Plastic Sheet, Laminated, Metal Clad (for Printed Wiring Boards) General Specification for*

MIL-R-83330, *Resin, Heat-Resistant, Laminating*

AMS 3616A, *Resin, Polyimide, Laminating and Molding, High-Temperature Resistant, 370° C (700° F) Unfilled, Addition Polymer*

AMS 3619, *Resin, Polyimide, Laminating, High-Temperature Resistant, 315° C (599° F)*

AMS 3845A, *Cloth, Type E-Glass, B Stage Addition-Cure Polyimide Resin-Impregnated*

AMS 3845/1A, *Cloth, Type E-Glass, B Stage Polyimide Resin-Impregnated, 181 Style Fabric, Low-Flow, Addition-Cure Resin for Press Cure 40-100 psi (275-690 kPa) or Vacuum/Autoclave Processing*

AMS 3845/2A, *Cloth, Type E-Glass, B Stage, Polyimide Resin-Impregnated, 181 Style Fabric, High-Flow, Addition-Cure Resin for Press Cure 40-100 psi (275-690 kPa) or Vacuum/Autoclave Processing*

AMS 3847A, *Cloth, Quartz, B Stage, Polyimide Resin-Impregnated, Style 581 Fabric, 315° C (600° F).*

4-7 POLYSULFONE RESIN (THERMOPLASTIC)

The polysulfones are high molecular weight polymers containing sulfone groups and aromatic nuclei in the main chain. Their structural unit, as shown in Fig. 4-7, is composed of phenylene units linked by three chemical groups: isopropylidene, ether, and sulfone. Each of these groups contributes to the properties of the polymer. Polysulfones are characterized as transparent, tough, rigid, high-strength amorphous thermoplastics that maintain these properties over a temperature range of −101° to 149° C (−150° to 300° F) (Ref. 26).

4-7.1 POLYSULFONE TYPES

The polysulfones are a family of three distinct polymers: polysulfone, polyethersulfone, and polyphenylsulfone; all of which have excellent thermal stability, high-

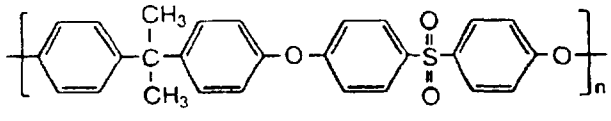

Figure 4-7. Polysulfone Structure

temperature rigidity, and toughness (Ref. 27). Their differences are heat resistance, notch sensitivity, and price. Because of these factors, only polysulfone has been considered for structural continuous reinforced composites.

Extensive investigations have been carried out by the Naval Air Systems Command on glass-, aramid-, and graphite-reinforced polysulfone to ascertain their potential as structural materials. Some of their advantages are

1. Reduced manufacturing costs due to shorter processing times, use of automated equipment, less scrappage, and longer shelf life. Because laminates can be postformed into complex shapes, manufacturing costs can be reduced 50 to 70% for some items.
2. Structural properties equivalent to some epoxy composites
3. Excellent adhesive properties in metal-to-composite and composite-to-composite bonding.

Polysulfone is supplied as pellets that are dissolved in methylene chloride to form an impregnating solution that is 15 to 20% solids (by weight).

The most distinctive feature of the polysulfone backbone chain is the diphenylene sulfone group. This group confers thermal stability, oxidative resistance, and rigidity even at high temperatures to the entire polymer molecule (Ref. 28).

Some flexibility in the backbone is required to impart toughness. This requirement is met by the ether linkage and moderately augmented by the isopropylidene link. The ether linkages also add to the thermal stability. In addition, both the ether and isopropylidene linkages improve the melt properties and make the material more easily processible at lower temperatures. Thus the inherent chemical structure, not the addition of modifiers, of polysulfone is responsible for its combination of properties.

Because of their thermoplastic structure, polysulfone prepregs can be press molded from 5 to 30 min at 260° to 343° C (500° to 650° F), depending on reinforcement and thickness. No postcuring is required.

4-7.2 PROPERTIES OF POLYSULFONE

Polysulfone has high strength and modulus, good impact resistance, and excellent creep resistance. These and other properties are discussed in the paragraphs that follow.

4-7.2.1 Physical and Mechanical Properties

The physical and mechanical properties of a polysulfone compound manufactured by Amoco Performance Products, Inc. under the trade name Udel are given in Table 4-21.

4-7.2.2 Electrical Properties

Polysulfone has excellent electrical properties over a wide temperature range and after immersion in water or exposure to high humidity. Some electrical properties of the material are given in Table 4-22.

4-7.2.3 Thermal Properties

The thermal properties of polysulfone are given in Table 4-23. This material also has excellent thermal endurance up to 149° C (300° F).

TABLE 4-21. PHYSICAL AND MECHANICAL PROPERTIES OF UDEL* POLYSULFONE P-1700

PROPERTY	AVERAGE VALUE AT 22°C (72°F)
Clarity	Transparent, 5% haze
Refractive index	1.633
Density, g/cm^3 (lb/in.^{3})	1.24 (0.0447)
Glass transition temperature, °C (°F)	190 (374)
Rockwell hardness	M69 (R120)
Water absorption (24 h), %	0.3
Water absorption (equilibrium), %	0.62
Tensile strength, yield, MPa (psi)	70 (10,200)
Tensile modulus of elasticity, GPa (psi)	2.5 (360,000)
Tensile elongation to break, %	50 to 100
Flexural strength, yield, MPa (psi)	106.2 (15,400)
Flexural modulus of elasticity, GPa (psi)	2.7 (390,000)
Compressive strength, at break, MPa (psi)	275.8 (40,000)
Poisson's ratio, at 0.5% strain	0.37

*Udel is a registered trade name of Amoco Performance Products, Inc.

TABLE 4-22. ELECTRICAL PROPERTIES OF POLYSULFONE P-1700

PROPERTY	VALUE
Dielectric strength, 3.18 mm (⅛-in.) specimen, S/T, kV/mm (V/mil)	16.7 (425)
Arc resistance (tungsten electrodes), s	122
Volume resistivity, at 22°C (72°F), Ω·mm (Ω·in.)	5×10^{17} (2×10^{16})
Dielectric constant, at 22°C (72°F),	
at 60 Hz	3.07
at 1 MHz	3.03
Dissipation factor, at 22°C (72°F),	
at 60 Hz	0.0008
at 1 MHz	0.0034

TABLE 4-23. THERMAL PROPERTIES OF POLYSULFONE P-1700

PROPERTY	VALUE
Heat deflection temperature at 1.8 MPa (264 psi), °C (°F)	174 (345)
Heat deflection temperature at 0.46 MPa (66 psi), °C (°F)	181 (358)
Coefficient of linear expansion, cm/cm·°C (in./in.·°F)	5.6×10^{-5} (3.1×10^{-5})
Thermal conductivity, W/(m·K) (Btu·in./(h·ft²·°F))	0.26 (1.8)
Specific heat, J/kg·K) (Btu/(lbm·°F))	
at 22°C (72°F)	1130 (0.27)
at 190°C (374°F)	174 (0.40)
Vicat softening temperature, °C (°F)	188 (371)

4-7.2.4 Chemical Properties

Polysulfone is highly resistant to aqueous mineral acids and to alkali and salt solutions. Resistance to detergents and hydrocarbon oils is good even at elevated temperatures under moderate levels of stress. Polysulfone will become swollen or dissolved by polar organic solvents, such as ketones, chlorinated hydrocarbons, and aromatic hydrocarbons (Ref. 29).

The general chemical resistance of polysulfone is given in Table 4-24.

TABLE 4-24. CHEMICAL RESISTANCE OF POLYSULFONE

Inorganic acids	N
Alkalis	N
Alcohols	N→PS
Aliphatic hydrocarbons	N
Aromatic hydrocarbons	PS
Chlorinated hydrocarbons	S

N—no effect
PS—partially soluble or swells
S—soluble

4-7.3 POLYSULFONE SPECIFICATIONS

There are no specifications for polysulfone laminates. There is, however, a specification MIL-P-46120A, *Plastic Molding and Extrusion Material, Polysulfone*. This document covers a resin that can be used to make a laminate-impregnating solution.

REFERENCES

1. H. Updegraff, "Unsaturated Polyester Resins", *Handbook of Composites*, Van Nostrand Reinhold Co., New York, NY, 1982, pp. 17-37.
2. J. R. Lawrence, *Polyester Resins*, Van Nostrand Reinhold Co., New York, NY, 1960.
3. H. V. Boenig, *Unsaturated Polyesters: Structures and Properties*, Elsevier Publishing Co., New York, NY, 1964.
4. E. E. Parker and J. R. Peffet, *Polymerization Processes*, Wiley-Interscience, New York, NY, 1977.
5. J. Bjorksten, *Polyesters and Their Applications*, Van Nostrand Reinhold Co., New York, NY, 1956.
6. C. A. May and Y. Tanaka, *Epoxy Resins: Chemistry and Technology*, Marcel Dekker, New York, NY, 1973.
7. H. Lee and K. Neville, *Handbook of Epoxy Resins*, McGraw-Hill Book Company, New York, NY, 1967.
8. L. S. Penn and T. T. Chiao, "Epoxy Resins", *Handbook of Composites*, Van Nostrand Reinhold Co., New York, NY, 1982, pp. 57-88.
9. *Epon Resin for Casting*, Shell Chemical Co., New York, NY, 1967.
10. MIL-R-9300B, *Resin Epoxy, Low-Pressure Laminating*, 15 January 1968.
11. J. T. Howarth, "What Designers and Processors Should Know About Flame-Retardant Additives", *Plastics World* (March 1973).
12. A. Knopf and W. Shieb, *Chemistry and Application of Phenolic Resins*, Springer-Verlag Publishing Co., New York, NY, 1979.

13. H. J. Doyle and S. C. Harrier, "Phenolics and Silicones", *Handbook of Fiberglass and Advanced Plastics Composites*, Van Nostrand Reinhold Co., New York, NY, 1969, pp. 85-113.

14. "Medium-Temperature Thermoset Matrix Composites", Composites 1, ASM International, Materials Park, OH, 381-91 (1987).

15. W. Noll, *Chemistry and Technology of Silicones*, Academic Press, Inc., New York, NY, 1968.

16. V. Bayant, V. Chvalovsky, and J. Rathosky, *Organosilicon Compounds*, Academic Press, Inc., New York, NY, 1965.

17. P. F. Bruins, *Silicone Technology—Applied Polymer Science, Symposium No. 14*, Wiley-Interscience, New York, NY, 1970.

18. DARCOM-P 706-315, Engineering Design Handbook, *Dielectric Embedding of Electrical or Electronic Components*, April 1979.

19. T. T. Serafini, "High-Temperature Resins", *Handbook of Composites*, Van Nostrand Reinhold Co., New York, NY, 1982, pp. 89-114.

20. S. L. Kaplan and S. S. Hirsch, "Polyimides: Chemistry, Processing, Properties", *New Industrial Polymers*, American Chemical Society, Washington, DC, 1972, pp. 100-11.

21. P. E. Cassidy, *Thermally Stable Polymers—Syntheses and Properties*, Marcel Dekker Co., New York, NY, 1980.

22. D. A. Scola, "The Chemistry, Processing Characteristics and Properties of Commercial Polyimide Resins—A Review", *31st International SAMPE Symposium and Exhibition*, Las Vegas, NV, 7-9 April 1986, pp. 1844-55.

23. D. A. Scola, "Some Chemical Characteristics of the Reverse-Diels-Alder (RDA) Polyimide, PMR-15", *Polyimides: Synthesis, Characterization, and Application, Proceedings of Second International Polyimide Conference*, Society of Plastics Engineers, Ellenville, NY, 30 October-1 November 1985.

24. D. A. Scola, "Polyimide Resins", Engineered Materials Handbook, Composites 1, ASM International, Materials Park, OH, 1987, pp. 78-89.

25. "Torlon® Engineering Resins—Physical Properties", *Technical Information Bulletin TAT-34A*, Amoco Chemicals Corporation, Chicago, IL, undated.

26. "Chemical Resistance of Torlon® Resins", *Technical Information Bulletin TAT-4*, Amoco Chemicals Corporation, Chicago, IL, March 1975.

27. O. B. Searle and D. F. Dakin, "Polyethersulfone", *Modern Plastics Encyclopedia*, McGraw-Hill Book Company, New York, NY, 1986, pp. 92-7.

28. L. A. Mekenna, "Polysulfone", *Modern Plastics Encyclopedia*, McGraw-Hill Book Company, Inc., New York, NY, 1985.

29. B. L. Dickinson, "Polyarylsulfone", *Modern Plastics Encyclopedia*, McGraw-Hill Book Company, New York, NY, 1986, p. 92.

CHAPTER 5
PROPERTIES OF VARIOUS FIBER-PLASTIC MATRIX COMPOSITES

Various fiber-plastic matrix composites are identified and properties are discussed.

5-1 INTRODUCTION

Continuous filament composites offer a combination of strength and stiffness properties that are significantly superior to similar properties of metallic materials, particularly when compared on strength- and stiffness-to-density ratios, which are termed "specific strength" and "specific modulus", respectively.

The form of reinforcement is the single most important variable that determines the basic engineering properties of a composite material. A comparison of mechanical properties for fiberglass, graphite, aramid, and boron fiber composites are given in Table 5-1. Generally, unidirectional reinforcement produces the highest tensile and compressive properties when these characteristics are measured in the direction of the fiber reinforcement, or 0 deg. Directional properties for three configurations (unidirectional, bidirectional, and fabric) of aramid laminates are contained in Table 5-2. Off-axis properties of unidirectional laminates are lower; they reach a minimum at 90 deg to the unidirectional fiber orientation, where strength is matrix dependent.

Plies of unidirectional reinforcement that are laid up in different directions, i.e., bi- or multidirectional fiber reinforcement, yield a more balanced set of properties. A bidirectional construction of unidirectional reinforcement laid up along 0- to 90-deg axes results in equivalent strength and stiffness properties when measured in the 0-and 90-deg axes.

A fabric composite has similar directional properties, although the weaving process slightly reduces the efficiency of the reinforcement. At angles other than 0 and 90 deg, fabric and 0- to 90-deg unidirectional composites have reduced properties. Strength and stiffness reach a minimum at 45 deg to the directions of fiber reinforcement.

One of the main advantages of the continuous filament composites is that the fiber properties can be tailored to the structural requirements of the item. This tailoring is

TABLE 5-1. MECHANICAL PROPERTIES OF UNIDIRECTIONAL EPOXY LAMINATES (Refs. 1 and 2)

PROPERTY	REINFORCEMENT							
	E-FIBERGLASS		GRAPHITE		ARAMID		BORON	
Density, g/cm^3 (lbm/in.^{3})	2.1	(0.075)	1.5	(0.055)	1.4	(0.050)	2.0	(0.073)
Tensile strength 0 deg, MPa (10^3 psi)	1103	(160)	1241	(180)	1379	(200)	1517	(220)
Tensile strength 90 deg, MPa (10^3 psi)	34.5	(5.0)	41.4	(6.0)	27.6	(4.0)	72.4	(10.5)
Tensile modulus 0 deg, GPa (10^6 psi)	39	(5.7)	131	(19.0)	76	(11.0)	207	(30)
Tensile modulus 90 deg, GPa (10^6 psi)	9.0	(1.3)	6.2	(0.9)	5.5	(0.8)	18.6	(2.7)
Poisson's ratio	0.25		0.30		0.34		0.21	
Compressive strength 0 deg, MPa (10^3 psi)	586	(85)	1103	(160)	276	(40)	2413	(350)
Compressive strength 90 deg, MPa (10^3 psi)	138	(20)	138	(20)	138	(20)	276	(40)

TABLE 5-2. EFFECT OF FIBER ORIENTATION ON MECHANICAL PROPERTIES* (Ref. 3)

ORIENTATION	UNIDIRECTIONAL (0 deg)		BIDIRECTIONAL (0 and 90 deg)		FABRIC (0 and 90 deg)	
MEASUREMENT DIRECTION	0 deg	90 deg	0 deg	45 deg	0 deg	45 deg
Tensile strength, MPa (ksi)	1379 (200.0)	28 (4.0)	634 (92.0)	97 (14.1)	517 (75.0)	207 (30.0)
Tensile modulus, GPa (10^6 psi)	76 (11.0)	6 (0.8)	39 (5.6)	7 (0.95)	31 (4.5)	8 (1.1)
Compressive strength, MPa (ksi)	276 (40.0)	138 (20.0)	200 (29.0)	126 (18.3)	172 (25.0)	124 (18.0)
Compressive modulus, GPa (10^6 psi)	76 (11.0)	6 (0.8)	39 (5.6)	7 (1.0)	31 (4.5)	7 (1.0)
Flexural strength, MPa (ksi)	620 (90)	—	—	—	345 (50.0)	—
Flexural modulus, GPa (10^6 psi)	76 (11)	—	—	—	28 (4.0)	—

*Aramid-reinforced epoxy resin

Reprinted, with permission from STP 704, *Commercial Opportunities for Advanced Composites*, copyright American Society for Testing and Materials, 1916 Race Street, Philadelphia, PA 19103-1187. The metric values included in this table have been added by the Research Triangle Institute.

accomplished by aligning plies of unidirectional filaments or fabric or by blending different fiber types. The blending or use of fiberglass, carbon-graphite, or other fibers is referred to as hybrid construction and the resultant properties are highly dependent on the reinforcement used.

The following paragraphs contain property data for composite laminates of fiberglass, carbon-graphite, aramid, and boron fibers in epoxy matrices. The data, however, are provided for general reference and are not suitable for design. Properties are highly dependent on the resin type, volume fraction of constituents, fabrication method, cure cycle, and so forth. The values are nominal in order to reflect relative characteristics.

5-2 PROPERTIES OF FIBERGLASS-REINFORCED COMPOSITES

Fiberglass-reinforced plastics are the most widely used composite materials. This wide use is due to the excellent properties achieved at relatively low cost. Epoxy resins are used in most military applications as the matrix material because of the desired higher mechanical properties, whereas polyester resins dominate the commercial market mainly because of their lower cost (Refs. 4, 5, and 6).

Fiberglass composites of E- and S-type fibers are of greatest military interest; typical mechanical properties of these materials are shown in Table 5-3. The properties listed are intended to illustrate the higher strength and modulus of S-type fiberglass relative to the strength and modulus of E-type. The S-type fiber is more costly and has been used in applications for which the higher specific strength is required, such as rocket motor cases. Table 5-3 also compares the relative strength of unidirectional to that of fabric or woven composites. To reiterate, the properties listed in Table 5-3 are typical and are influenced

TABLE 5-3. TYPICAL MECHANICAL PROPERTIES OF UNIDIRECTIONAL EPOXY FIBERGLASS (Ref. 3)

TYPE OF FIBER	E-GLASS	S-GLASS
Unidirectional density, g/cm^3 (lbm/in^3)	1.8 (0.065)	1.7 (0.060)
Unidirectional tensile strength, MPa (10^3 psi)	1103 (160)	1379 (200)
Fabric tensile strength, MPa (10^3 psi)	414 (60)	586 (85)
Unidirectional tensile modulus, GPa (10^6 psi)	41.4 (6)	55.2 (8)
Fabric tensile modulus, GPa (10^6 psi)	23.4 (3.4)	27.6 (4)
Fabric compressive strength, MPa (10^3 psi)	345 (50)	414 (60)

Reprinted, with permission from STP 704, *Commercial Opportunities for Advanced Composites*, copyright American Society for Testing and Materials, 1916 Race Street, Philadelphia, PA 19103-1187. The metric values included in this table have been added by the Research Triangle Institute.

by many variables, such as fiber form, fiber finish, matrix material, resin content, and cure schedule.

In addition to tensile and compressive properties, fiberglass composites have good creep resistance, fatigue resistance, and impact strength. Much data have been produced and reported; however, such data must be adequately screened to determine relevancy to the application.

Typical values for the coefficient of thermal expansion for E- and S-glass epoxy resin composites are 8.6×10^{-6} cm/(cm·°C) (4.8×10^{-6} in./(in.·°F)) and 6.3×10^{-6} cm/(cm·°C) (3.5×10^{-6} in./(in.·°F)), respectively. These values are influenced by the resin used and how the fibers are plied into final form. High temperature resistance is totally dependent on the resin formulation, which is critical in elevated temperature use.

The electrical properties of fiberglass contribute to good performance in electrical and electronic applications, i.e., principally circuit boards and radomes. Dielectric constant values for E-glass and S-glass epoxies are 4.3 and 3.8, respectively.

Long-term aging and strength retention of fiberglass-reinforced composites in actual service have interested designers for some time. The primary problem has been the lack of accurate original strength data and data for parts with many years of actual service.

Quite some time ago fiberglass parts were found to be highly susceptible to ultraviolet degradation; protective coats of paint were required to prevent early failure. Later, it was found that layers of paint or any organic protective films do not protect composites from deterioration by absorption of moisture. Moisture degradation can be reduced by use of proper fabric sizing, but the only fully effective moisture barriers are thin metal foils.

An evaluation was conducted on several aircraft components that were carefully documented during fabrication and became available for destructive testing. The results of the destructive tests on these units, which were in service for up to 19 yr, and their comparison with the original data are shown in Tables 5-4 and 5-5. The original strength data were obtained from the design strength reports prepared on the fabric laminates.

TABLE 5-4. FIBERGLASS EPOXY OUTDOOR EXPOSURE DATA* (Ref. 8)

RESIN TYPE	MOISTURE CONTENT, %	TENSILE STRENGTH, MPa (10^3 psi)		FLEXURAL STRENGTH MPa (10^3 psi)		FLEXURAL MODULUS GPa (10^6 psi)	
		AGED	ORIGINAL	AGED	ORIGINAL	AGED	ORIGINAL
828/BF$_3$-400	0.50	523 (75.8)	555 (80.5)	268 (38.9)	475 (68.9)	21.6 (3.13)	15.5 (2.25)
828/MNA/BDMA	0.20	653 (94.7)	647 (93.8)	601 (87.1)	613 (88.9)	27.6 (4.00)	21.6 (3.14)
828/MNA/BDMA	0.20	607 (88.0)	607 (88.1)	569 (82.5)	595 (86.3)	21.0 (3.05)	18.2 (2.64)
828/MNA/BDMA	0.18	617 (89.5)	603 (87.4)	593 (86.0)	629 (91.3)	21.6 (3.13)	21.8 (3.16)
828/MNA/BDMA	0.25	617 (89.5)	627 (91.0)	663 (96.1)	553 (80.2)	—	20.7 (3.00)

*Data compiled for filament-wound nose radomes with exposure period for aged specimens of 11-15 yr.

TABLE 5-5. OUTDOOR EXPOSURE DATA FOR PAINTED FIBERGLASS EPOXY COMPOSITE* (Ref. 8)

SPECIMEN	MOISTURE CONTENT, %	TENSILE STRENGTH, MPa (10^3 psi)		TENSILE MODULUS GPa (10^6 psi)	
		AGED	ORIGINAL	AGED	ORIGINAL
Upper skin, unpainted	1.0	246 (35.7)	269 (39.0)	13.1 (1.9)	17.9 (2.6)
Upper skin, painted	1.46	290 (42.0)	262 (38.0)	14.5 (2.1)	17.2 (2.5)
Bottom skin, painted	1.32	234 (34.0)	232 (33.7)	13.8 (2.0)	14.5 (2.1)

*Data are average values compiled for plied fabric skins of a honeycomb radome for an exposure period of 19 yr for aged specimens.

For the filament-wound nose radomes (Table 5-4), each unit was molded oversized and the trim area was used for test specimens. Thus data from aged units can be compared directly with the original data on the same radome. The data show the susceptibility of the BF_3-cured specimen to degradation. (This susceptibility is due to the hygroscopic nature reflected in the high moisture content.)

For a radar dome (Table 5-5), data were compiled to show the resistance to outdoor exposure of painted and unpainted surfaces. Results show that if adequate paint protection is given, fiberglass parts subjected to service at moderate temperature—not over 121°C (250°F)—do not experience any significant loss of strength after exposures of about 20 yr, but a moderate loss in modulus may be encountered. If the protective coating is destroyed or degraded, some strength reduction can occur.

Tests on marine structures used over many years substantiate the findings on the radomes. Most strength loss is recovered if the aged parts are dried to remove absorbed moisture. Neither moisture nor ultraviolet degradation is a serious problem. Also current glass sizings and resin systems are superior to those previously available.

In summary, testing results indicate that fiberglass components do not show any appreciable structural degradation after up to 20 yr in dynamic environmental extremes. It is essential, however, that a protective coating or paint be applied to protect parts against rain erosion, abrasion, and the influence of ultraviolet radiation. Paints do not retard moisture permeation, and this fact must be a consideration in the design.

5-3 PROPERTIES OF CARBON-GRAPHITE FIBER-REINFORCED COMPOSITES

Carbon-graphite fiber composites are highly desired for their high strength and stiffness (Ref. 9). Several plies of fibers at different angles must be used to insure proper strength if a structure is to carry load along more than one axis. Molding of mat or woven fabric materials results in parts with semi-isotropic properties. However, the strength and stiffness of mat composites are considerably less than they are for unidirectional and woven fiber or oriented (bidirectional, etc.) fiber composites. Table 5-6 gives typical mechanical properties of continuous fiber reinforcement in roving and fabric form. Values for a chopped fiber are given for comparison.

The fatigue properties of composites reinforced with graphite are superior to those of metallic materials (Ref. 10). The fatigue limits of various structural materials are shown in Table 5-7.

Comparison of the fatigue properties of quasi-isotropic (0-, ±45-, and 90-deg) graphite composite with 2024-T4 aluminum is interesting. The data show that although the 0-, ±45-, and 90-deg graphite composite has a lower static strength, the maximum stress at 10^7 cycles is slightly greater than that of the aluminum alloy under unnotched tension loading (Ref. 11).

Because the density of high-strength graphite composites is one half that of aluminum and one fifth that of steel, the design limit specific static and specific fatigue strengths of even quasi-isotropic laminates are generally superior to those of metals.

TABLE 5-6. MECHANICAL PROPERTIES OF VARIOUS FORMS OF GRAPHITE FIBER-EPOXY COMPOSITES (Ref. 3)

FIBER FORM	TENSILE STRENGTH, MPa (10^3 psi)	TENSILE MODULUS, GPa (10^6 psi)	COMPRESSIVE STRENGTH, MPa (10^3 psi)	COMPRESSIVE MODULUS, GPa (10^6 psi)
High-strength fiber (0 deg)	1627 (236)	138 (20)	993 (144)	113 (16.4)
High-strength fiber (0 deg, ± 45 deg)	496 (72)	57.2 (8.3)	503 (73)	50 (7.3)
High-modulus fiber	1242 (180)	215 (31.2)	759 (110)	177 (25.6)
Fabric	510 (74)	70.3 (10.2)	510 (74)	63.4 (9.2)
Molding compound	352 (51)	108 (15.7)	469 (68)	—

Reprinted, with permission from STP 704, *Commercial Opportunities for Advanced Composites*, copyright American Society for Testing and Materials, 1916 Race Street, Philadelphia, PA 19103-1187. The metric values included in this table have been added by the Research Triangle Institute.

TABLE 5-7. FATIGUE PROPERTIES OF GRAPHITE-EPOXY COMPOSITES (Ref. 3)

MATERIAL	FIBER LAY-UP, deg	STATIC STRESS MPa (10^3 psi)	MAXIMUM STRESS, UNNOTCHED MPa (10^3 psi)		MAXIMUM STRESS, NOTCHED $k = 3$ MPa (10^3 psi)	
			10^4 Cycles	10^7 Cycles	10^4 Cycles	10^7 Cycles
Graphite	0	1138 (165)	862 (125)	800 (116)	483 (70)	414 (60)
	0, 90	758 (110)	538 (78)	448 (65)	434 (63)	414 (60)
	0, ± 45, 90	400 (58)	331 (48)	310 (45)	221 (32)	207 (30)
Fiberglass	0	1793 (260)	552 (80)	276 (40)	—	—
Aramid	0	1241 (180)	931 (135)	869 (126)	—	—
Aluminum 2024-T4	—	531 (77)	441 (64)	290 (42)	345 (50)	193 (28)

Reprinted, with permission from STP 704, *Commercial Opportunities for Advanced Composites*, copyright American Society for Testing and Materials, 1916 Race Street, Philadelphia, PA 19103-1187. The metric values included in this table have been added by the Research Triangle Institute.

The thermal properties of carbon-graphite resin composites are unusual. Typical values of the coefficient of thermal expansion along and across the fibers of a unidirectional carbon-graphite fiber-reinforced polymer matrix range from -0.36×10^{-6} to -0.54×10^{-6} mm/(mm·°C) (-0.20×10^{-6} to -0.30×10^{-6} in./(in.·°F)) and from 22×10^{-6} to 36×10^{-6} mm/(mm·°C) (12×10^{-6} to 20×10^{-6} in./(in.·°F)), respectively. The typically negative coefficient of expansion along the fiber coupled with freedom in selection of orientation permit the designer to adjust the thermal coefficient over a broad range in composite structures.

Carbon-graphite polymer matrix composites show relatively high thermal conductivity along the fiber and low conductivity in the transverse direction (Ref. 12). Conductivities comparable to the conductivity of steel can be reached along the fiber direction if high fiber volume fractions are used in the matrix. The ability to dissipate heat may be important in increasing fatigue life. Values of thermal conductivity for various materials are shown in Table 5-8.

Orientation, fiber volume fraction, void content, and moisture absorption properties of the matrix control the electrical characteristics of the composite. The carbon-graphite fiber is electrically conductive, whereas the polymer matrices are nonconductive. Typical volume resistivity values are given in Table 5-9. The graphite composite is many orders of magnitude more conductive than fiberglass composites, but it is not as conductive as metals.

TABLE 5-8. THERMAL CONDUCTIVITY OF GRAPHITE-EPOXY COMPOSITES

MATERIAL TYPE	THERMAL CONDUCTIVITY* W/(m·K) [(Btu·ft)/(h·ft²·°F)]
High-strength graphite	6.9 (4)
Medium-strength graphite	27.7 (16)
High-modulus graphite	53.6 (31)
Fiberglass	3.5 (2)
Aluminum	173.0 (100)
Steel	31.1 (18)

*Values are nominal and are for the fiber direction of the composite constructions.

TABLE 5-9. VOLUME RESISTIVITY OF GRAPHITE-EPOXY COMPOSITES (Ref. 3)

MATERIAL	RESISTIVITY*, Ω·cm
High-strength graphite	10^3
High-modulus graphite	10^3
Fiberglass	10^{20}
Aluminum	4
Steel	14

*Values given are nominal and are for fiber direction.

Reprinted, with permission from STP 704, *Commercial Opportunities for Advanced Composites*, copyright American Society for Testing and Materials, 1916 Race Street, Philadelphia, PA 19103-1187. The metric values included in this table have been added by the Research Triangle Institute.

5-4 PROPERTIES OF ARAMID FIBER-REINFORCED COMPOSITES

The use of low-density aramid materials leads to lighter weight composites than does use of glass- or graphite-reinforced products (Ref. 13). At equal fiber volume, weight savings of 10 to 30% can be gained in composite structures made with aramid rather than fiberglass and graphite composites or metals. Such savings are typical in the aircraft and marine industries. In certain applications reduced weight may provide the means to increased performance.

The mechanical properties shown in Table 5-1 compare the properties of unidirectional composites reinforced with aramid (Kevlar® 49), E-glass, graphite, and boron. Shear strengths of aramid composites are lower than they are for other continuous fiber composites.

The Kevlar® 49 laminate is 34% lighter in weight than the glass and 10% lighter in weight than the graphite laminate. The composite tensile strength with Kevlar® 49 is higher than for either glass or graphite composites. The tensile stiffness is about twice that of the glass composite but is not as high as that of the graphite composite. All other properties are well balanced with the exception of compressive strength for which the ultimate strength of the Kevlar® 49 laminate is 50% of the glass and 25% of the graphite composites.

Table 5-2 compares the mechanical properties of aramid fibers as a function of composite form. The highest strength and stiffness are achieved with the unidirectional form in the direction of the fiber, which is typical of all filamentary composites.

Composites reinforced with unidirectional aramid have a linear stress/strain curve to failure when tested in tension. However, when tested in compression or bending, these composites exhibit ductile behavior at high strains (Ref. 14). This metallike ductility makes aramid unique in comparison to inorganic reinforcing fibers.

The creep and stress-rupture characteristics of unidirectional composites of aramid are quite good in comparison with those of fiberglass composites. When subjected to a static tensile load of 689 MPa (100,000 psi), the creep rate of aramid is similar to that of glass: 1.7×10^{-4} mm/mm/min (1.7×10^{-4} in./in./min) versus 1.3×10^{-4} mm/mm/min (1.3×10^{-4} in./in./min) in the 100- to 1000-min range. However, the glass composite stress ruptured within 6000 min at this stress level. After unloading the Kevlar® 49, the strain recovery occurs at a rate of 2.1×10^{-4} mm/mm/min (2.1×10^{-4} in./in./min) in the 100- to 1000-min range. Composites of aramid exhibit better stress-rupture characteristics than glass at all comparable levels of ultimate tensile stress.

Composites must withstand continuous applications of low-level cyclic stresses in many applications. These products include pressure vessels, aircraft parts, and boat hulls (Ref. 15). Composites of aramid exhibit good fatigue behavior. The tension fatigue resistance of unidirectional composites of aramid is better than that of fiberglass composites and aluminum and is equivalent to the fatigue resistance of graphite and boron composites.

Resistance of composites to damage from impact is hard to quantify due to the complexity of the impact loading spectrum. Variables include impact speed, size and shape of the impacting object, and angle of impact, as well as composite construction and amount of support. Composites of Kevlar® 49 and 29 have good impact resistance to low speed and high speed and to ballistic impact. In thinly laminated structures aramid composites show twice the impact strength of glass composites when tested with a 76.2-mm (3.0-in.) diameter steel ball. Aramid composite armor has 15 to 45% high ballistic resistance at 15 to 25% lower weight than fiberglass armor. Soft fabric armor of aramid offers additional ballistic protection at even greater weight savings.

Maintaining low levels of vibration or shock is required in many aircraft, marine, and automotive structures. Aramid composites damp vibration better than glass, graphite, or metals.

Electrical properties of aramid composites are given in Table 5-10. These values are compared with the values for a glass composite. Aramid composites are excellent insulators and show good radar transparency. They can be used with advantage where the end product needs improved electrical insulation or a reduced radar signature.

Aramid fibers can be combined with various resins to give composites that have a range of thermal expansion properties. The fiber has a negative coefficient of thermal expansion; therefore, aramid composites can be designed that neither expand nor contract during temperature changes. This stability is important in applications in which composite growth can lead to undesirable internal stresses or in which materials of different thermal expansion properties are bonded.

Aramid composites show good environmental stability. The fibers are not affected by most common chemicals, so stability of the composite is most often determined by the resin matrix. Loss of interlaminar shear strength is the phenomenon most often observed when Kevlar® composites are exposed to chemicals (Ref. 16).

TABLE 5-10. ELECTRICAL PROPERTIES OF ARAMID VERSUS A FIBERGLASS COMPOSITE (Ref. 3)

PROPERTY	ARAMID*	FIBERGLASS**
Dielectric constant, † 10^6 Hz	4.12	5.15
Dissipation factor, † 10^6 Hz	0.0239	0.0208
Dielectric strength, † V/mm (mil)		
Thickness, mm (mils): 0.75 (29.4)	37,756 (959)	–
1.79 (70.6)	26,102 (663)	—
1.92 (75.7)	—	27,748 (654)
0.91 (35.7)	—	30,906 (785)
Volume resistivity, Ω·cm (Ω·in.)	5×10^{15} (1.97×10^{15})	2×10^{15} (0.79×10^{15})
Surface resistivity, Ω/cm² (Ω/in.²)	5×10^{15} (0.78×10^{15})	3×10^{15} (0.47×10^{15})
Arc resistance, s	125	123

*Aramid fabric style 120 of 22 plies with a fiber volume fraction of 50% yields a thickness of 1.7 mm (0.068 in.).
**Fiberglass fabric style 128 of 11 plies with a fiber volume fraction of 46% yields a thickness of 1.9 mm (0.075 in.).
† Conditioned for 72 h at 23°C (73°F) and 50% relative humidity

Reprinted, with permission from STP 704, *Commercial Opportunities for Advanced Composites*, copyright American Society for Testing and Materials, 1916 Race Street, Philadelphia, PA 19103-1187. The metric values included in this table have been added by the Research Triangle Institute.

5-5 PROPERTIES OF BORON FIBER-REINFORCED COMPOSITES

Some basic mechanical properties of a unidirectional boron epoxy laminate are shown in Table 5-1. Boron is the composite material that has the highest density compared to fiberglass, graphite, and aramid fiber composites and is also the strongest and stiffest of the group. Although boron fiber remains costly, it is used in critical aircraft components because of its stiffness and weight savings (Ref. 2).

Some characteristics of unidirectional and cross-plied boron-epoxy laminates are shown in Table 5-11. Typically a boron laminate provides the major strength and stiffness in the direction of the filament. If the part is to carry load in several directions, several cross plies of the material

TABLE 5-11. MECHANICAL PROPERTIES OF BORON-EPOXY LAMINATES (Ref. 6)

PROPERTY	DIRECTION, deg	SP 272 UNIDIRECTIONAL, 0 deg	SP 272 CROSS PLY, 0-90 deg	NARMCO 5505 UNIDIRECTIONAL, 0 deg	NARMCO 5505 CROSS PLY, 0-90 deg
Tensile stress, MPa (ksi)	0	1296 (188)	745 (108)	1434 (208)	717 (104)
	45	—	153 (22.2)	—	123 (17.8)
	90	80.7 (11.7)	—	60.0 (8.7)	—
Tensile modulus, GPa (10^6 psi)	0	207 (30)	125 (18.2)	213 (30.9)	124 (18.0)
Compressive strength, MPa (ksi)	0	3061 (444)	—	2606 (378)	—
Compressive modulus, GPa (10^6 psi)	0	245 (35.5)	—	240 (34.8)	—
Flexural stress, MPa (ksi)	0	1772 (257)	—	—	—
Flexural modulus, GPa (10^6 psi)	0	203 (29.5)	—	—	—
Interlaminar shear, MPA (ksi)	0	43.4 (6.29)	129 (18.7)	—	119 (17.3)
	45	—	453 (65.7)	—	439 (63.7)

must be used. A typical laminate has filaments oriented at 0 and 90 deg. The 90-deg filaments increase the tensile and compression strengths in the transverse direction.

Boron fibers in an epoxy matrix provide tensile and compressive strengths that make them valuable compared to the many other filamentary materials (Refs. 17 and 18). Boron composites may have tensile strengths in excess of 1580 MPa (230×10^3 psi) and compression strengths of 2480 MPa (360×10^3 psi). High-strength graphite fibers can match boron fibers in tensile strength but offer only about 50% of the strength of the boron fibers in compression. Boron filaments, however, are considerably more expensive than other fibrous materials, such as graphite, aramid, or S-glass.

The thermal properties of boron-epoxy composites are important because they are used in hybrid aircraft constructions. Typical values of the coefficient of thermal expansion along and across the fiber of a unidirectional boron-reinforced epoxy are 2.3×10^{-6} mm/(mm·°C) (1.3×10^{-6} in./(in.·°F)) and 37×10^{-6} mm/(mm·°C) (20.6 $\times10^{-6}$ in./(in.·°F)), respectively. The longitudinal and transverse coefficients of thermal expansion of a 45-deg boron-epoxy laminate are 5.6×10^{-6} mm/(mm·°C) (3.1×10^{-6} in./ (in.·°F)) (Ref. 2).

5-6 PROPERTIES OF HYBRID COMPOSITES

Hybrid composites are composed of more than one type of fiber reinforcement or more than one matrix combined uniquely into a structure. Plies of reinforcement, e.g., boron and graphite, are laid up in laminar form to achieve specific strength, modulus, or thermal characteristics. Also a more ductile fiber may be combined with a more brittle fiber to achieve better impact properties. Cost reductions may be achieved by adding a less expensive fiber and sacrificing some desired property characteristic. Hybrids allow an infinite number of combinations of composite structures and variations in characteristics that allow great opportunities for cost savings (Ref. 1).

Table 5-12 contains mechanical properties of a hybrid fiberglass-graphite composite and shows the influence of adding the higher strength, higher modulus graphite fiber to a fiberglass-composite. As a graphite fiber is added to the hybrid construction, the tensile strength and modulus increase (Ref. 19). This increase allows the designer to combine fibers to achieve the desired tensile properties.

Another example of the advantage of combining fibers is in the improvement of the impact strength of a graphite fiber composite. Table 5-13 shows the improved impact strength after the addition of either aramid or fiberglass fiber to graphite fiber (Ref. 20).

The designer has an unlimited number of combinations of fiber composites available to tailor the composite structure to meet design requirements. However, this tailoring requires detailed data for basic composite structures and experimentation to verify the suitability of the hybrid form.

5-7 SUMMARY

The composite properties contained in the chapter are intended to provide a relative indication of the characteristics of the continuous, high-strength fibers of military interest. The data are affected by many variables and will vary widely depending on the fiber type, finish, form (unidirectional or fabric), matrix material, laminate construction, fabrication method, and cure cycle, and so forth.

The composites provide an advantage over conventional materials, such as steel and aluminum, because they provide greater strength and stiffness and considerable weight savings. The ability to tailor a structure to meet design requirements provides the designer a unique opportunity to select and integrate combinations of not only the continuous fiber composites but also the conventional metals.

TABLE 5-12. MECHANICAL PROPERTIES OF FIBERGLASS-GRAPHITE COMPOSITES*

PROPERTY	PERCENT FIBERGLASS/GRAPHITE			
	100/0	75/25	50/50	25/75
Density, g/cm³ (lbm/in.³)	1.91 (0.069)	1.85 (0.067)	1.80 (0.065)	1.66 (0.060)
Tensile strength, MPa (ksi)	607 (88)	641 (93)	689 (100)	807 (117)
Tensile modulus, GPa (10^6 psi)	40 (5.8)	64 (9.3)	90 (13.0)	123 (17.9)
Flexural strength, MPa (ksi)	945 (137)	1062 (154)	1220 (177)	1262 (183)
Flexural modulus, GPa (10^6 psi)	35 (5.1)	63 (9.2)	79 (11.4)	112 (16.3)
Interlaminar shear strength, MPa (ksi)	66 (9.5)	74 (10.8)	76 (11.0)	83 (12.0)

*Properties were measured on unidirectionally oriented fiber with polyester resin matrix.

TABLE 5-13. IMPACT STRENGTH OF GRAPHITE HYBRID COMPOSITES* (Ref. 20)

PERCENT REINFORCEMENT			UNNOTCHED IZOD,	
GRAPHITE	ARAMID	FIBERGLASS	N·m/m	(ft·lb/in.)
100	—	—	1490	(28)
75	25	—	1810	(34)
50	50	—	2350	(44)
—	100	—	2560	(48)
75	—	25	2350	(44)
50	—	50	2990	(56)
—	—	100	3840	(72)

*Impact strength is measured for an epoxy resin matrix.

REFERENCES

1. J. W. Weeton, D. M. Peter, and K. L. Thomas, *Engineers' Guide to Composite Materials*, American Society for Metals, Materials Park, OH, 1987.
2. R. J. Suplinskas and James V. Marzik, "Boron and Silicon Carbide Filaments", *Handbook of Reinforcements for Plastics*, Van Nostrand Reinhold Co., New York, NY, 1987, pp. 340-63.
3. A. A. Watts, *Commercial Opportunities for Advanced Composites*, American Society for Testing and Materials, Philadelphia, PA, 1980.
4. J. S. Mohr, "Fiberglass", *Handbook of Fillers and Reinforcements for Plastics*, Van Nostrand Reinhold Co., New York, NY, 1978, pp. 467-503.
5. C. E. Knox, "Fiberglass Reinforcement", *Handbook of Composites*, Van Nostrand Reinhold Co., New York, NY, 1982, pp. 136-59.
6. MIL-HDBK-17A, *Plastics for Aerospace Vehicles, Part I, Reinforced Plastics*, January 1971.
7. R. Staunton, Chapter 19, "Environmental Effects on Properties of Composites", *Handbook of Composites*, George Lubin, Ed., Van Nostrand Reinhold Co., New York, NY, 1982.
8. G. Lubin and P. Donohue, "Real Life Aging Properties of Composites", *35th Annual Technical Conference, Reinforced Plastics/Composites Institute*, The Society of the Plastics Industry, New Orleans, LA, 4-8 February 1980, pp. 17E1-13.
9. P. E. McMahon, "The Relationship Between High-Modulus Fiber and Unidirectional Composite Tensile Strength", *19th SAMPE National Symposium and Exhibition*, Buena Park, CA, 1974, pp. 214-26, Society for the Advancement of Material and Process Engineering, Covina, CA.
10. L. S. Bevan and J. B. Sturgeon, "Fatigue Limits in CFRP", *Proceedings of the Second International Conference on Carbon Fibers*, Plastics Institute, London, England, February 1974, pp. 213-24.
11. M. J. Owen, "Fatigue of Carbon-Fiber-Reinforced Plastics", *Composite Materials, Vol. 5, Fatigue and Fracture*, Academic Press, New York, NY, 1975, pp. 314-40.
12. W. T. Freeman and G. G. Kuebler, "Mechanical and Physical Properties of Advanced Composites", *Composite Materials: Testing and Design*, ASTM Special Technical Publication (STP), 546, American Society for Testing and Materials, Philadelphia, PA, 1974, pp. 435-56.
13. N. J. Abbott, J. G. Donovan, M. M. Schopper, and J. Shelton, *Some Mechanical Properties of Kevlar® and Other Heat-Resistant, Nonflammable Fibers, Yarns, and Fabrics*, Technical Report ATML-TR-74-65 Part III, Air Force Materials Laboratory, Wright-Patterson Air Force Base, OH, 1975.
14. J. H. Greenwood and R. G. Rose, "Compressive Behavior of Kevlar® 49 Fibers and Composites", J. Mat. Sci. 9, 1509 (1974).
15. M. A. Hamstad, T. T. Chiao, and R. G. Patterson, "Fatigue Life or Organic Fiber/Epoxy Pressure Vessels", *Proceedings of the Seventh National SAMPE Conference*, Albuquerque, NM, 16-19 October, 1975, pp. 217-29, Society for the Advancement of Material and Process Engineering, Covina, CA.
16. C. C. Chiao, R. L. Moore, and T. T. Chiao, "Measurement of Shear Properties of Fiber Composites—I. Evaluation of Test Methods", Composites 8, 161-9 (July 1977).
17. *Advanced Composites Design Guide, Third Edition, Second Revision*, Air Force Flight Dynamics Laboratory, Wright-Patterson Air Force Base, OH, 1976.
18. F. E. Wawner, "Boron Filaments", *Modern Composite Materials*, Addison-Wesley, Reading, MA, 1967, pp. 244-69.
19. K. H. Miska, "Hybridizing Expands Properties, Cuts Costs of Advanced Composites", Materials Engineering 88, 35 (August 1978).
20. D. M. Riggs, R. J. Shuford, and R. W. Lewis, Chapter 11, "Graphite Fibers and Composites", *Handbook of Composites*, George Lubin, Ed., Van Nostrand Reinhold Co., New York, NY, 1982.

CHAPTER 6
GENERAL METHODS OF FABRICATION

Methods of fabrication of composites are discussed and the sequence of operations is given. The problems of defects and types of defects are described, and comparative features of molding methods are presented in tabular form.

6-1 INTRODUCTION

Continuous filament reinforced plastics can be made by various techniques. These methods are (1) hand lay-up, or contact molding, (2) compression molding (cold press molding and high-pressure molding), (3) vacuum bag molding, (4) autoclave molding, (5) pressure bag molding, (6) vacuum injection molding and resin transfer molding, (7) pultrusion, and (8) filament winding (Ref. 1). In addition, there are miscellaneous methods that are used less often.

Each process has advantages and disadvantages; therefore, process selection depends on the resin system, reinforcement, product design, production quantity and quality, and economics. Composite properties will vary with resin system, reinforcement type and style, fabrication method, fiber content, and void content. In general, as the molding pressure is increased, the strength of the laminate will be increased for the same type of reinforcement and resin system.

6-2 FABRICATION PROCESSES

6-2.1 HAND LAY-UP

The hand lay-up process, or contact molding, is the oldest and simplest method for making glass-fiber-reinforced parts (Ref. 2). Male or female molds can be made of wood, metal, plaster, or plastic.

In hand lay-ups resin and reinforcement are manually placed in the mold (Fig. 6-1), and entrapped air is removed with squeegees or rollers. Successive layers of reinforcement and resin can be added to build the part to the desired thickness. If a smooth, colored surface is required, a pigmented resin material (called a gel coat) can be sprayed or brushed on the mold before lay-up. Upon completion the mold side of the part becomes the finished outer surface.

The wet lay-up normally hardens at room temperature, but heat may be used to reduce curing time. A smoother exposed side can be achieved by applying a film, such as polyvinyl alcohol, cellophane, or polyester, which can be removed after the hardening process (Ref. 3).

Lay-up uses low-cost molds, requires a minimum amount of equipment, and presents no size restriction. It offers maximum design flexiblity, and changes in part

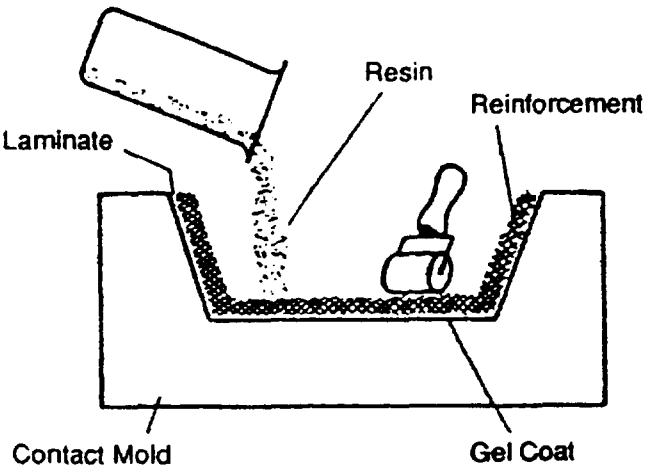

Reproduced with permission from *Engineers' Guide to Composite Materials*, American Society for Metals, Metals Park, OH, 1986.

Figure 6-1. Hand Lay-Up (Ref. 1)

configuration can readily be made in the molds. However, it is a labor-intensive process and quality of the piece part is highly dependent on the skill of the labor.

A variation of contact molding is referred to as spray-up. During this method continuous fibers are chopped into short strands and sprayed onto the open mold with the resin. Spray-up yields a lower strength product consisting of discontinuous fibers that is not covered in this handbook.

6-2.2 COMPRESSION MOLDING—COLD PRESS MOLDING

This process uses a matched mold, and the item is cured at room temperature and moderate pressure, i.e., approximately 345 kPa (50 psi). A matched mold consists of two matching halves fabricated to form the final part when mated. The reinforcement is positioned on one mold surface, and then a predetermined amount of resin is poured on the reinforcement, as shown in Fig. 6-2. The second mold half is put in place, the mold is closed, and pressure is applied until the item is cured. Cold press molding is normally used for short to intermediate volume production (1 to 10,000 items). Low-cost, cast plastic molds (generally backed up with steel plates) are often used (Ref. 4).

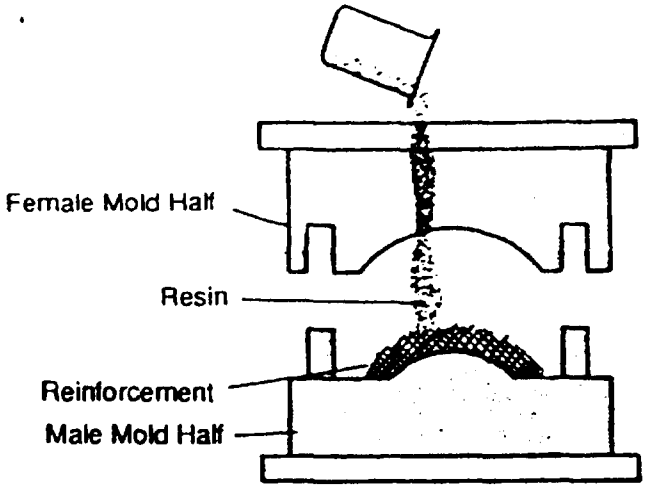

Reproduced with permission from *Engineers' Guide to Composite Materials*, American Society for Metals, Metals Park, OH, 1986.

Figure 6-2. Cold Press Molding (Ref. 1)

The advantages of this process are (Ref. 5)

1. Cold-molded parts are more dimensionally controlled than hand lay-up or vacuum-bagged parts.
2. The quality and appearance of cold-molded parts approach those of high-pressure-molded parts.
3. Plastic molds can generally be fabricated in-house with less lead time and lower cost than machined, matched metal steel molds.
4. Facilities and equipment costs are lower than those required for high-pressure molding.

The disadvantages of cast resin molds and low-pressure molding are

1. Molds are easily damaged.
2. Molds are more difficult to break in than steel molds.
3. Mold preparation costs are generally higher than they are for steel molds.
4. Parts with ribs, bosses, and other complex shapes cannot be produced readily by low-pressure molding.

6-2.3 COMPRESSION MOLDING—HIGH-PRESSURE MOLDING

High-pressure molding is similar to cold press molding except that the material in a B-stage form is placed into the open female part of the mold. Also high-pressure molding techniques employ more sophisticated, matched metal molds in hydraulic compression presses. For high-volume production chrome-plated steel molds are used. For low-volume production aluminum, beryllium copper, Meehanite (iron-steel), and Kirksite (zinc alloy) have been used. The molds must be capable of withstanding pressures in the range of 1.38 to 13.8 MPa (200 to 2000 psi) and of being mounted firmly and accurately in the press.

Mold design is an extremely intricate craft, and experienced mold makers and mold designers should be consulted before the product design is finished (Ref. 6). A few of the design guides for compression molds used for reinforced plastics are

1. The shear edges should be hardened.
2. The clearance at the shear edges is usually in the range of 0.051 to 0.127 mm (0.002 to 0.005 in.) for preform and mat molding.
3. The travel after shearing (the telescoping of the male and female) should be approximately 1.59 mm (1/16 in.) for parts up to 3.18 mm (⅛ in.) thick. For parts thicker than 3.18 mm (⅛ in.), more travel distance is required.
4. Guide pins, lands, and/or stops are located as far from the shear edge as possible to prevent interference by the reinforcement.

The advantages of high-pressure molding are

1. Labor costs are substantially lower and production rates substantially higher than those for low-pressure molding.
2. Automation is possible in parts of the process.
3. Uniformity of dimensions and quality of the molded parts improve progressively from hand lay-up through the rest of the processes.
4. Negligible finishing is required.

The disadvantages are similar to cold press molding in that

1. Molds can be easily damaged.
2. Mold preparation costs are relatively high.
3. Parts with complex shapes and undercuts are more difficult to mold.
4. Facilities and equipment costs are higher than those for low-pressure molding.

6-2.4 VACUUM BAG MOLDING

Vacuum bagging methods have been developed for producing a variety of components and structures (Ref. 7). Complex shapes, including double contours, and relatively large parts are handled readily. The method is suited primarily to those cases for which higher pressure molding cannot be used. Generally, a preformed shape is encased within a sealed bag, and a vacuum is applied during the curing process. This method is shown in Fig. 6-3.

The steps in the process are the lay-up, preparation of a bleeder system, and the bagging operation. The required number of plies for a lay-up are precut to size and positioned in the mold (or mold form) one ply at a time. Each ply is separately worked to remove trapped air and wrinkles to insure intimate contact with the previously laid-up ply. The completed lay-up is covered with a porous, nonadhering material that provides easy release of and vacuum access to the lay-up. Various perforated films or coated fabrics are available for this purpose.

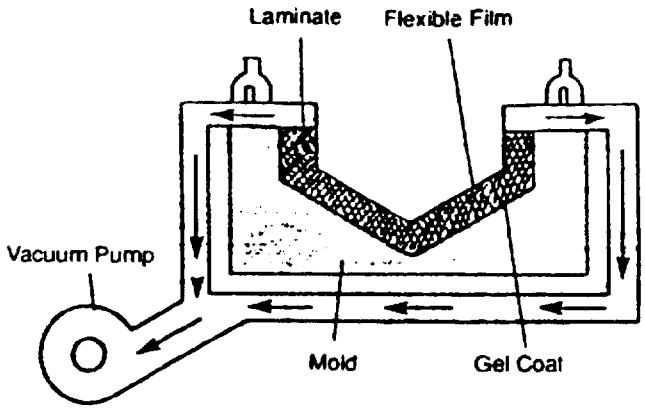

Reproduced with permission from *Engineers' Guide to Composite Materials*, American Society for Metals, Metals Park, OH, 1986.

Figure 6-3. Vacuum Bag Molding (Ref. 1)

A controlled capacity bleeder system is required to absorb excess resin and to permit the escape of volatiles while maintaining the specified fiber-volume ratio of a particular laminate. Bleed out may be through the edges (edge bleed out), through the top surface (vertical bleed out), or through a combination of both. An edge bleed out is made by placing a narrow width of bleeder cloth (about 25 mm (1 in.) of uncoated fiberglass, burlap, or similar material) along the periphery of the lay-up. Vertical bleeder plies of the same material are placed directly over the perforated film. Edge-bled parts usually require trimming to remove resin-rich edges. When parts cannot be trimmed, "flexible dams" are used with vertical bleeders to minimize edge bleed out. Bleed out of unidirectional tapes or wide goods generally requires the addition of a thin, flexible cull plate over the bleeder plies to prevent excessive resin washout and to provide a smooth bag-side surface. The lay-up may contain peel plies when subsequent bonding operations are to be performed. The peel ply is placed in direct contact with the lay-up and below the release film.

Vacuum connections are placed over the vertical bleeders or outside the edge bleeders. A sufficient number of ports are provided to insure a uniform flow of resin and volatiles. The bagging film, tailored to fit the part, is placed over the lay-up, bleeder system, and vacuum connectors and is sealed to the mold plate. A partial vacuum is usually drawn to smooth the bag surface prior to the application of full vacuum and heat. The bagged mold is transferred to an oven for curing with full vacuum applied. In most cases the vacuum is maintained during the entire heating and cooling cycle. This process can also be used for room temperature curing systems.

6-2.5 AUTOCLAVE MOLDING

Autoclave molding is similar to the vacuum bag process, except that the lay-up is subjected to greater pressures and denser parts are produced (Ref. 8). The bagged lay-up is cured in an autoclave by the simultaneous application of heat and pressure, as shown in Fig. 6-4. Most autoclave processes also use vacuum to assist in the removal of trapped air or other volatiles. The vacuum and autoclave pressure cycles are adjusted to permit maximum removal of air without incurring an excessive resin flow. Usually vacuum is applied only in the initial stages of the curing cycle, whereas autoclave pressure is maintained during the entire heating and cooling cycle. Curing pressures are normally in a range of 345 to 690 kPa (50 to 100 psi). Compared with vacuum bag molding, this process yields laminates with closer control of thickness and lower void content.

6-2.6 PRESSURE BAG MOLDING

Pressure bag molding is a process that uses a rigid female mold and a tailored, inflatable bag or rubber sheet for the male mold. The reinforcement is placed in the female mold; then the tailored bag is placed against the reinforcement and inflated to expand it against the impregnated reinforcement, as shown in Fig. 6-5. Sometimes vacuum is drawn on the laminate to aid in removing air and excess resin from the laminate. Fluid pressure (generally compressed air) is used to pressurize the bag. Usually pressures of 138 to 345 kPa (20 to 50 psi) are employed.

6-2.7 VACUUM INJECTION MOLDING AND RESIN TRANSFER MOLDING

Both processes use matched molds (Ref. 9). The dry reinforcement is laid in the female mold half or on the male mold half before they are put together. In vacuum

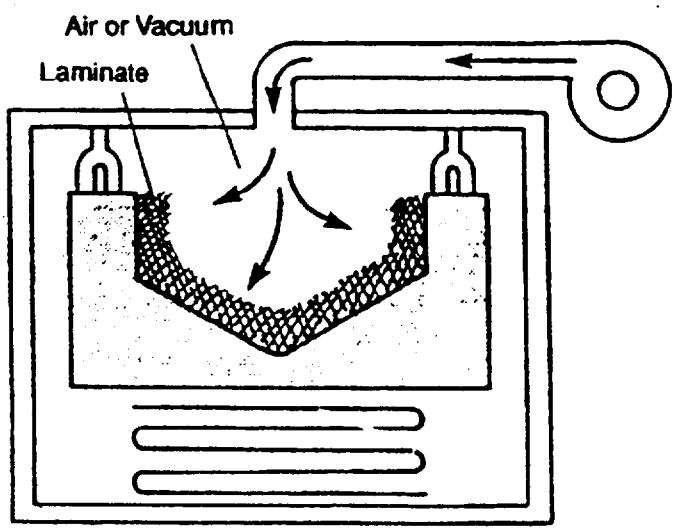

Reproduced with permission from *Engineers' Guide to Composite Materials*, American Society for Metals, Metals Park, OH, 1986.

Figure 6-4. Autoclave Molding (Ref. 1)

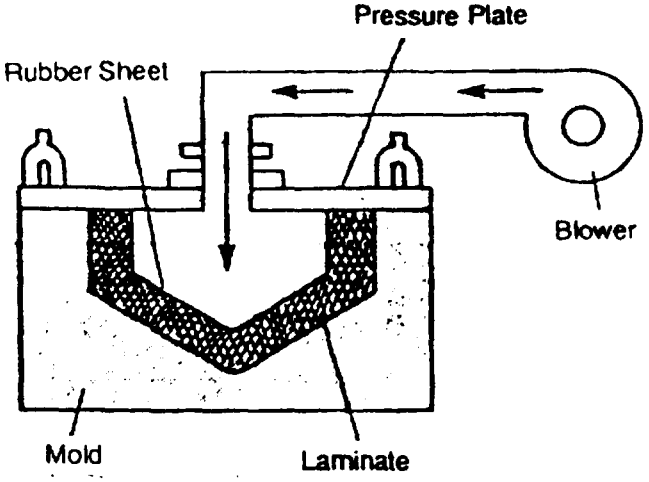

Reproduced with permission from *Engineers' Guide to Composite Materials*, American Society for Metals, Metals Park, OH, 1986.

Figure 6-5. Pressure Bag Molding (Ref. 1)

injection molding a resin trough is an integral part of the mold. The trough is filled with resin, and vacuum is then drawn at the high points of the mold. As the air is evacuated from the mold, resin is drawn through the reinforcement until it fills the vacuum ports, which are then closed. After the part cures, it is removed from the mold.

In resin transfer molding, the reinforcement is laid up in the mold, and the resin is pumped into the mold through ports until the mold is filled and the air is removed. In both processes high-appearance parts require gel coat or postfinishing. Resin transfer molding normally uses a two-pot system so that the pot life of the resin system is not an interfering factor. One pot contains the required catalyst and resin, and the other pot contains resin and the required promoter and accelerator materials. Two pumps are used to move the resin into and through a mixing device that is inserted into the mold entry port where the resin is mixed while being pumped into the mold.

The advantages of vacuum injection molding and resin transfer molding are

1. Parts will have two smooth sides.
2. Parts are fabricated to close tolerance to assure accurate assembly.
3. Molding-in of inserts of wood, foam, or metal in the initial laminate will reduce secondary bonding and this will reduce unit cost.
4. Controlled resin and glass fiber use reduces unit cost.
5. A variety of mold shapes and sizes can be molded sequentially because of the mobile pumping equipment.
6. Fewer molds can produce a higher rate of output due to faster cure time.
7. Volatile emission is practically eliminated during resin transfer into the mold. The high cost of environmental equipment can be substantially reduced.
8. Molding personnel usually require less training to perform resin transfer molding.
9. Resin usage can be reduced by the addition of fillers.
10. Parts can be gel coated, pigmented, postfinished, or combined with thermoplastic skins during the molding process.

Disadvantages of the procedures include

1. Tooling and clamping must be designed to withstand an internal pressure of approximately 276 kPa (40 psi).
2. The parts have a high resin content.
3. Matched molds are required.
4. Resin-starved areas can occur and will not be detected until the part is cured.
5. Posttrimming is required for this process, i.e., trimming and dust pickup equipment are needed.

6-2.8 PULTRUSION

Pultrusion is one of the few basic processes in the reinforced plastics industry that converts primary raw materials directly into finished product, continuously and automatically, with no intermediate handling or processing involved. From thermoset resin suppliers the liquid resin and continuous-filament reinforcements are fed into a modern pultruder in a continuous process which impregnates, orients, shapes, and completely cures unlimited-length, constant cross-sectional profiles, both solid and tubular. The process is shown in Fig. 6-6. The product is cut to the desired length and stacked for shipment or use.

The automatic, relatively labor-free operation of modern pultrusion machines has been a key factor in the rapid growth of the pultrusion industry. Thermoplastic and thermoset prepregs can also be pultruded (Ref. 10).

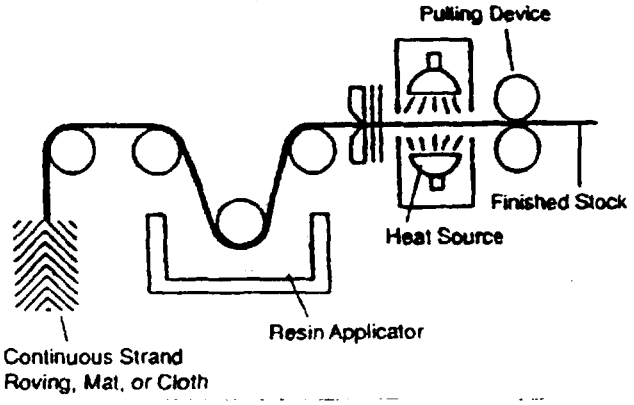

Reproduced with permission from *Engineers' Guide to Composite Materials*, American Society for Metals, Metals Park, OH, 1986.

Figure 6-6. Pultrusion (Ref. 1)

Although the pultrusion process can be performed by different machine variations, all are classed as either continuous- or intermittent-pull, in a horizontal or vertical product direction, using caterpillar-type tractors or reciprocating-type clamp pullers. Machine variations occur primarily at the curing zone, i.e., generally in die materials and methods of applying heat to polymerize the resin and cure the profile to its final shape. The process incorporates conductively heated steel dies and dielectrically heated nonmetallics (fluoroplastic or ceramic) where the composite material is under restraint during cure, and radiantly heated ovens in those processes that use no continuous restraining force at gel or peak exotherm polymerization points in the resin-curing cycle. Radiantly heated ovens are also used in composites that employ wrapped films or braided reinforcements.

Among the US firms of the pultrusion industry, the dominant machine configuration is continuous pull (continuous cure), in a horizontal product direction, using either tractor or reciprocating pullers, and using a conductively heated steel die in the final cure zone. The continuous pull feature, by definition, dictates continuous cure and thereby eliminates the index marks characteristic of intermittent-pull systems.

Sophisticated pultrusion machines consist of reinforcement-dispensing systems, a resin impregnation system, quality control monitoring instruments, and flying, cutoff saws for complete automation.

Reinforcement-dispensing systems are generally geared to fiberglass in all its filament forms and consist of roving support racks with spindle creels from which woven roving, mats, and fabric are dispensed. Directional properties in pultrusions are obtained by material selection. Continuous roving is used for strength in the longitudinal direction, woven roving is used for bidirectional properties, and mats and woven fabrics are used for isotropic properties. Sometimes combinations of different reinforcement types are used to obtain specialized properties.

Boron, graphite, and aramid are often used singly or with glass fibers in multidirectional orientation to obtain high-strength and high-modulus pultrusions (Ref. 11). Almost every shape that can be extruded can also be made by pultrusion.

Quality control instruments on a pultrusion machine should include automatic die temperature controls and cured stock temperature monitors.

Almost every accepted form of reinforcement can be used, e.g., roving, tow, mat, and cloth braiding, from all types of filament, e.g., glass, graphite, Kevlar®, boron, steel, and nylon. However, consideration must be given to (1) adequate axial strength to sustain pulling forces, (2) the thermal conductivity and specific heat influencing rate of heat transfer, (3) the volume ratio of reinforcement to matrix, which controls the thermal effect during curing, and (4) the electrical properties of the filament if dielectric heating is employed.

6-2.9 FILAMENT WINDING

Filament winding is applicable to end products having hollow shapes that are cylindrical or oval (Ref. 12). It is a process in which fibers or tapes are wound onto a rotating mandrel from a relatively stationary position, as shown in Fig. 6-7. The fibers are dispensed from a translating head at controlled angles normal to the rotating mandrel axis. Lay-up compaction can be controlled by the degree of tension maintained on the fibers or tape during the process. Resins, such as liquid polyesters or epoxies, are commonly used.

The continuous reinforcement is impregnated with liquid resin by being drawn through a resin bath and wound under tension onto a steel or aluminum rotating mandrel in the shape of the finished part. The filament winding machine traverses the reinforcement over the length of the mandrel in a predetermined pattern to give maximum strength in the directions required. Fiber lay-down angle may range from nearly 90 deg to about 10 deg off the horizontal axis (Ref. 13). After sufficient thickness has been built up, the laminate on the mandrel is cured at room temperature or in an oven and is then removed from the mandrel. The mandrel determines the inside surface, and the outside surface may be accurately machined if required. Filament winding equipment enabling nearly continuous production is available, and the process can be automated if volume justifies it (Ref. 14).

6-2.10 MISCELLANEOUS METHODS

There are a number of occasionally used fabrication methods. Thermal expansion molding is one such method (Ref. 15). The molding process produces integrally

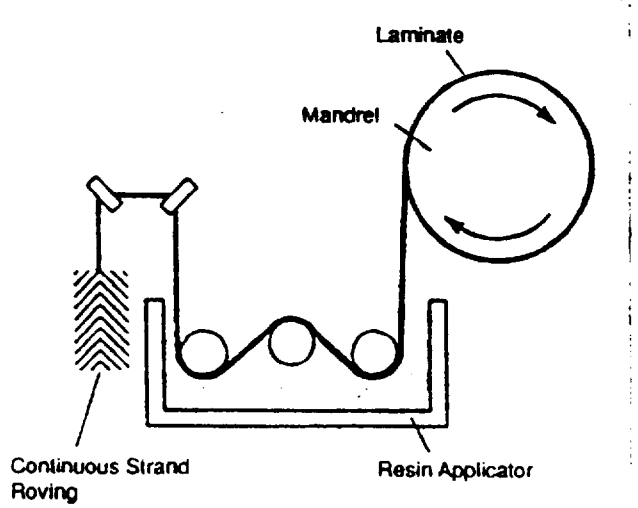

Reproduced with permission from *Engineers' Guide to Composite Materials*, American Society for Metals, Metals Park, OH, 1986.

Figure 6-7. Filament Winding (Ref. 1)

stiffened structures having complex shapes. Prepreg layers are wrapped over blocks of rubber and the lay-up and rubber blocks are restrained in a metal cavity. As temperature is increased, the rubber blocks or mandrels expand more than the metal restraining tool and thereby generate curing pressure and eliminate the need for external pressure application, such as can be applied with an autoclave. Very high pressures can be generated (up to 5.5 MPa (800 psi)) if the mass of rubber versus the cavity is not controlled. Tooling is simple, inexpensive, and easily changed for prototype hardware changes. Also a designer has considerable design latitude to mold complex assemblies in a single cycle. Thus overall manufacturing costs can be reduced by decreasing the number of parts that have to be handled, by eliminating joints, and by decreasing assembly and fastening operations.

Continuous sheet lamination is a process whereby the mat or fabric is passed through a resin-impregnating bath, covered with plastic film, passed through compacting rollers (which may be corrugated to form corrugated sheet), and cured.

Machine lay-up of laminates is accomplished to eliminate the human error, improve the laminate quality (low void content), and to speed up the fabrication process (lower cost). Some of the problems encountered with developing tape lay-up machines have been tape tack, tape alignment, indexing of tape orientation through numerical control, and lay-up of curved surfaces. A major hindrance in the use of these machines in substructure fabrication has been the inability to wrap tapered components while maintaining a constant laminate orientation.

Tape lay-up machines, as they exist today, range from hand-operated dispensing heads on a track to fully automated machines. A single operator manually operates the lay-down head and manually cuts the tape. There are many variations that can be applied to this basic concept, such as a cutting device on the head, a table base that rotates for different tape orientations, a continuous belt system for indexing the Mylar template, and others that can be adapted to suit a particular application.

6-3 PROCESS DEFECTS

The quality of continuous fiber-reinforced composites is highly process dependent. Quality work can be produced if there is careful supervision and if the workers have been thoroughly trained. A number of fabrication defects, such as voids, wrinkles, delamination, resin dryness or richness, crazing, and foreign inclusion, can be avoided or minimized. The presence of any of these defects will have an adverse effect on the physical and mechanical properties of a laminate.

Reinforced laminates often have small voids, or air bubbles, which detract from their strength properties. Generally, these voids are formed by entrapment of air during lay-up of the resin and reinforcement and by release of volatile components from the resin system during cure. Voids are never completely absent, and an acceptable number of voids should be established for compatibility with end-use requirements.

Laminates made by the contact molding method (hand lay-up) tend to have a higher void content than laminates molded under pressure. Careful working of a laminate during lay-up can force or work out a large portion of the air bubbles.

Many air bubbles can be worked out of a lay-up by the use of rollers and squeegees. Part of the problem in wet lay-ups can be minimized by avoiding inclusion of air bubbles during mixing of the resin system. Resin cure temperatures should be kept below the point at which volatiles from the monomer would form gas bubbles. Bubbles should be eliminated from one ply before work is begun on the next. Careful placement of plies—working from the middle of the layer to the outer edge or from one end to the other—will eliminate wrinkles, which can result in large voids between the plies.

Wrinkles in a laminate are caused by careless handling of the plies of reinforcement during the lay-up or molding process. A wrinkle between the plies of a laminate causes a weak area in the interlaminar bond and reduces the mechanical strength properties of the laminate. Therefore, a wrinkle in the reinforcement is detrimental to the overall strength of the laminate.

Lack of intimate contact between adjacent plies in a laminate during cure results in interlaminar separation, i.e., delamination. The area of separation can be a void space or a pool of excess resin. Either condition results in a weak spot in the laminate. Both conditions can be eliminated by proper working of the laminate before work is begun on the next ply. Although this type of defect does not readily occur in laminates cured under pressure, it can readily develop from careless lay-up in the contact method.

Laminates are "resin-starved" when made with insufficient or unequally distributed resin. Resin dryness results in inadequate bond of the reinforcement, and inadequate bonding causes excessive voids or porosity in the laminate. This dryness also invites corrosion attack and contributes to low wet strength retention.

Excessive amounts or uneven distribution of a resin in a laminate can cause resin-rich areas. These resin-rich areas are subject to cracking and will reduce the physical properties of a laminate due to the lack of adequate reinforcement, which is an imbalance of the ratio of resin to reinforcement.

Crazing is the formation of tiny, hairline cracks through the body of the resin due to rapid or excessively hot curing conditions. Resin-rich areas or heavy, unreinforced gel coats of a laminate are subject to crazing. Gradual deterioration in crazed areas of a laminate can be

expected to occur when it is subjected to weather and moisture. Laminates made with rigid resins generally have a greater tendency to craze than laminates made with flexibilized resins.

6-4 COMPARATIVE FEATURES OF MOLDING METHODS

Table 6-1 gives comparative features of the various molding methods. Mold costs and facility costs range from low (hand lay-up) to very high (compression). Although compression molding has the most favorable ranking in production rate, physical properties, and quality of part, the process is not widely used in continuous filament composites. The bag molding processes and filament winding are used to fabricate most composite structures. These methods allow tailoring of mechanical properties, which are reproducible with precut and pre-impregnated forms of the raw material.

The basic fabrication processes have been enhanced and are continually the focus of production engineering studies to optimize further the use of composite materials.

6-5 PRODUCTION RANGE OF PARTS VERSUS TYPE MOLD

The durability of various mold materials versus molding methods is shown in Table 6-2. Each quantity listed provides a relative indication of the capability of each fabrication process. The number of parts is highly dependent on the size, shape, pressure, and cure temperature used.

TABLE 6-1. COMPARATIVE FEATURES OF FABRICATION PROCESSES

FEATURE	MOLDING METHOD								
	HAND LAY-UP	COLD PRESS MOLDING	HIGH-PRESSURE MOLDING	VACUUM BAG MOLDING	AUTOCLAVE MOLDING	PRESSURE BAG MOLDING	RESIN TRANSFER MOLDING	PULTRU-SION	FILAMENT WINDING
Mold cost	Low	Medium	Very high	Medium	Medium	Medium	High	Low	Low
Facility cost	Low	Low	Very high	Low	High	Low	Low	High	High
Production rate	Low	Medium	Very high	Low	Low	Low	Medium	High	Medium
Physical properties	Low	Medium	High	Low	Medium	Low	Low	High	High
Quality of part	Low	High	High	Low	Medium	Medium	Medium	Medium	Medium
Surface appearance	Poor	Good	Excellent	Poor	Poor	Poor	Good	Good	Poor
Resin content	High	Medium	Low	High	Medium	High	Very high	Medium	High
Finishing required	High	Little	Very little	High	High	High	Little	Little	High
Operator skill	Medium	Medium	Low	Medium	Medium	Medium	Low	Low	Medium

TABLE 6-2. TYPICAL NUMBER OF PARTS PRODUCED ON VARIOUS TYPES OF MOLDS

MOLD MATERIAL	FABRICATION PROCESS								
	HAND LAY-UP	COLD PRESS MOLDING	HIGH-PRESSURE MOLDING	VACUUM BAG MOLDING	AUTOCLAVE MOLDING	PRESSURE BAG MOLDING	RESIN TRANSFER MOLDING	PULTRU-SION	FILAMENT WINDING
Plaster	1-10	1-3	NA	1-10	1-10	1-10	1-10	NA	1-3
Wood	1-50	1-10	NA	1-50	1-50	1-50	1-50	NA	1-10
Fiberglass-reinforced plastic	1-1000	1-50	NA	1-1000	1-1000	1-1000	1-2000	NA	NA
Cast plastic	1-1000	1-50	NA	1-1000	1-1000	1-1000	1-5000	NA	NA
Machined aluminum	>1000	>1000	>1000	>1000	>1000	>1000	>1000	NA	1-50
Cast aluminum, Kirksite	>1000	>1000	>1000	>1000	>1000	>1000	>1000	NA	NA
Tool steel	>10,000	>10,000	>100,000	>10,000	>10,000	>10,000	>10,000	NOTE	>1000

NOTE: Pultrusion dies are made from hardened steel dies and produce infinite lengths of composites. When wear is encountered, dies are replaced.

REFERENCES

1. J. W. Weeton, D. M. Peter, and K. L. Thomas, *Engineer's Guide to Composite Materials*, American Society for Metals, Materials Park, OH, 1987, pp. 6-1 through 6-24.
2. C. Wittman and S. D. Shook, "Hand Lay-Up Techniques", *Handbook of Composites*, Van Nostrand Reinhold Co., New York, NY, 1982, pp. 321-67.
3. E. W. Beck, "Silicone Rubber Puts on Squeeze for High-Quality Composite Lay-Ups", Plastics World 33, 45 (16 June 1975).
4. J. Ferrarini, "Development of a Unique Method for the Preparation of High-Quality SMC", *Proceedings, Society of Plastics Industry 33rd Annual Conference*, Reinforced Plastics/Composites Institute, Washington, DC, February 1978, pp. 901-6.
5. N. Raghupathi and P. K. Mallick, "Preheating to Decrease Cure Cycles in Compression-Molded FRP", Plastics Design & Processing 19, 39 (January 1979).
6. R. M. Riddell, "Tailoring the Properties of Compression-Molded Plastics", Machine Design 52, 106 (10 July 1980).
7. A. Slobodzinski, "Bag Molding Processes", *Handbook of Composites*, Van Nostrand Reinhold, New York, NY, 1982, pp. 368-90.
8. S. F. Monroe and B. E. Chitwood, "Structural Laminate Bag Molding Process", *Handbook of Fiberglass and Advanced Plastics Composites*, Van Nostrand Reinhold Co., New York, NY, 1969, pp. 327-33.
9. P. R. Young, "Thermoset Matched Die Molding", *Handbook of Composites*, Van Nostrand Reinhold Co., New York, NY, 1982, pp. 391-448.
10. *MM&T-Pultruded Composite Structure Element*, Technical Bulletin, Goldsmith Engineering, December 1976.
11. B. H. Jones, "Pultruded Filamentary Composite—An Experimental and Analytical Determination of Process Parameters", *Proceedings, Society of the Plastics Industry 29th Annual Conference*, Reinforced Plastics/Composites Institute, Washington, DC, February 1974, Section 15C, pp. 1-6.
12. T. T. Chiao, E. E. Jessup, and L. Penn, "Screening of Epoxy Systems for High-Performance Filament-Wound Application", *7th National Technical SAMPE Conference*, October 1975, pp. 167-76, Society for the Advancement of Material and Process Engineering, Covina, Ca.
13. K. B. Turner, "Filament Winding—Some Basic Principles", Modern Plastics 31, 116 (December 1959).
14. Anonymous, "Filament Winding Materials and Techniques Build Complex Shapes and Structures", Product Engineering 48, 25 (June 1977).
15. W. S. Cremens, *Manufacturing Methods for Thermal Expansion Molding of Advanced Composites*, AFML-TR-75-110, Lockheed-Georgia Co., Marietta, GA, August 1975.

CHAPTER 7
APPLICATIONS OF CONTINUOUS FIBER-REINFORCED COMPOSITES

Applications of composites are identified for fiberglass, carbon-graphite, aramid, and boron continuous fibers. Specific end-item uses are described where known.

7-1 INTRODUCTION

Composite materials have been widely applied to military aerospace materiel (Refs. 1-3). Development applications can be justified because many improvements and advantages have been gained through the use of composites. The product generally has evolved through the initial substitution of a composite for a part, replacement for another material, or the initial complete design of a system. The impetus for use of composites is weight savings, which occur because of their high specific strength and stiffness. Design flexibility is another primary motivator that leads to the decisions to use composites for military applications.

Newly developed technology allows major decreases in costs of raw materials and fabrication. As process variables are brought into control and automation and faster molding cycles become possible, some savings in cost become possible. Material costs have remained relatively stable, but they are somewhat volume sensitive. Advancements in technology should make available materials at reduced costs.

The choice to use continuous filament fibers in the military is directly related to their large-scale use in industry because large volume commercial use results in reduced raw material costs and increased cost-effectiveness. This reasoning was behind the choice to use fiberglass two decades ago and applies to the choice to use carbon-graphite and aramid fibers, which are widely used in the commercial sector. Boron fibers, on the other hand, still are used less often due to their limited commercial use and high cost.

Hybrid constructions using various filament composites integrated with metals offer significant advantages in military applications. More and more applications continue to demonstrate the effectiveness of using various fiber composites to meet end-item requirements. The paragraphs that follow describe the use of each fiber type in military applications.

7-2 APPLICATIONS OF FIBERGLASS-REINFORCED COMPOSITES

Fiberglass composites, as compared with other fiber-reinforced composites (carbon-graphite, aramid, and boron), account for at least 95% of the composite market in product volume. Military use of fiberglass, however, is very small. Products include filament-wound rocket motor cases, pressure vessels, launch tubes, silos, tubing, fuel pipe, missile shells, and rocket nozzles (Ref. 4). Other end-items include tank and automotive components, storage tanks, propeller blades, radomes, antennas, nose cones, instrument housings, electrical circuit boards, boat hulls, marker buoys, floating docks, and numerous aircraft parts (Ref. 5). The reinforcements used in the military are either E- or S-fiberglass, and the resins used are primarily polyesters or epoxies (bisphenol or novalac).

Military use of fiberglass began in the aircraft and aerospace industries, which continue to be the largest users. Fiberglass is now being combined with advanced composite materials to form hybrid structures. High use of fiberglass will continue due to its low cost and the success achieved with its use during the last three decades. Use in the military will increase with increased applications in the commercial sector. Many industrial uses are being incorporated into the military, particularly in building construction, marine applications, and vehicles (Refs. 6 and 7).

7-3 APPLICATIONS OF CARBON-GRAPHITE FIBER-REINFORCED COMPOSITES

Many present and potential uses of carbon-graphite resin matrix composites are identifiable. These applications are basically oriented to aircraft and space structures. However, the unique and, at times, superior properties of these components encourage their use in designing alternative or new kinds of equipment. Some of the desirable properties of carbon-graphite composites include high thermal conductivity, high electrical resistance (dielectric strength), good environmental resistance, high stiffness, low density, high tensile strength, and high creep resistance (Ref. 8).

Currently the primary application of carbon-graphite composites is in military and commercial aircraft. The use of graphite fiber/epoxy matrix systems in aircraft structures falls into three structural groups: wing, empennage, and fuselage components. Within these

groups composite use has been effected through complete redesign, element-by-element substitution of composites for metals, and selective skin reinforcement of metallic elements with composites. Element-by-element substitution represents the majority of applications. Table 7-1 is a partial summary of the uses of graphite-epoxy in military aircraft structures (Ref. 9).

Missile applications include the use of graphite-epoxy materials for major structures. The Trident I uses a graphite fiber in the highly loaded thrust skirt. A filament-wound, high-strength graphite-epoxy rocket motor case was developed for the space shuttle to replace steel booster cases in order to achieve significant weight reduction. A 3.7-m (12-ft) filament-wound segment is 5900 kg (13,000 lbm) less than the original steel motor case (Refs. 1 and 2).

Graphite-epoxy spring design has been examined as a possible way to reduce the weight of the multileaf spring in heavy-duty trucks. In early data the composite spring weighed only 13.6 kg (30 lbm) compared to 56.7 kg (125 lbm) for a steel spring. Also the composite spring showed increased life and increased load capacity in the early stages of testing.

TABLE 7-1. AIRCRAFT APPLICATIONS OF GRAPHITE-EPOXY COMPOSITES

APPLICATION	COMPONENT(S)
F-16	Horizontal stabilizer skins over aluminum honeycomb, vertical stabilizer skins, and rudder
C-5A	Leading edge slat skins over aluminum honeycomb
A-4	Landing flap skins over aluminum honeycomb and an actuator rib and horizontal stabilizer skin honeycomb structure
F-4	Rudder leading edge spar of graphite with polyimide resin
F-15	Composite wing ribs and spars
F-18	Wing skins, horizontal and vertical tail boxes, wing and tail control surfaces, speed brake, and outer engine duct made with polyimide resin
F-5	Main landing gear door, leading edge flap, horizontal stabilizer skins over aluminum honeycomb, and speed brake
B-1B	Leading edge slat skins over aluminum honeycomb and weapons bay door
A-7	Speed brake skins

Use of composites of graphite-epoxy for automotive driveshafts has been examined. Replacing the steel tube portion of the driveshaft with a composite results in a weight reduction of 2.3 kg (5 lbm). The steel shaft weighs 7.7 kg (17 lbm), whereas the composite weighs 5.4 kg (12 lbm). Also the steel shaft needs balance weights. Testing indicates that the graphite-epoxy driveshaft improves ride quality. Also, some data show that a one-piece composite driveshaft can replace a two-piece steel driveshaft in some vehicular applications because the weight and cost of a center main bearing is eliminated (Ref. 10).

A reflector support truss for the National Aeronautics and Space Administration's (NASA's) Application Technology Satellite is required to establish accurate positioning of the reflector dish with respect to the earth-viewing module (EVM). The low thermal coefficient of expansion of graphite-epoxy tubes minimizes truss thermal growth (or shrinkage). This relationship provides very stable positioning of the reflector with regard to the EVM over a temperature range of −160 to 93°C (−256 to 200°F).

Technology programs have been evaluated to verify the performance of in-service practical structures. The aft fuselage cone of the US Army heavy-lift helicopter (CH-54B) has been reinforced with graphite composite stiffening, which resolves a dynamic vibration problem. A graphite-composite-reinforced center wing box of a US Air Force (USAF) C-130 twin-engined cargo aircraft has been in service since 1974. A large amount of practical experience has been gleaned from this application with respect to minimizing residual stresses and warpage in the construction of reinforcement for the 11-m (36-ft) long box.

Also there are some worthwhile marine applications for graphite composites (Ref. 11). Full-scale structural elements have been under development. These elements are made of a graphite-epoxy box beam with steel stiffeners and a graphite fiber-epoxy hydrofoil control flap with thin titanium overlays. The box beam is a substitute for the structure used as the main load-carrying box of the forward foil of the Navy's experimental Patrol Craft Hydrofoil (PCH-1 High Point). The composite articles duplicate the actual structural geometry and fabrication details of the hydrofoil. A tapered test section 1.2 m (48 in.) long is included; here the desired stress level is produced in the center of the specimen.

The composite hydrofoil control flaps will be 2.1 m (7 ft) long and will have a chord length of 0.46 m (1.5 ft). One of the control flaps is to be installed on the aft inboard foils of the PCH-1 to replace one of the existing steel flaps, and the second flap will be subjected to a full lifetime of fatigue testing. The information collected from these uses of the composite flaps will be applied in the design and fabrication of other marine structures.

The National Research Council of Canada is developing a 15-m (50-ft) remote manipulation arm. This research is

part of NASA's space shuttle payload deployment and retrieval mechanisms program. High-modulus graphite with epoxy resin is used for the three-piece arm construction. Properties of the hollow tubes include lightness, high stiffness, and low coefficient of thermal expansion.

Hollow tubular construction 0.33 m (13 in.) in diameter with tube walls 1.27 to 1.9 mm (0.050 to 0.075 in.) thick and 0- and ±38-deg orientation of fibers has been used for the structure. The manipulator arm will be capable of deploying 14,515 kg (32,000 lbm) of payload in space in no more than 9 min from release of payload tie-down. The arm will have remotely controlled television and lights to provide side viewing and depth perception.

Use of carbon-graphite composites in military applications will continue to expand as the demand for lighter weight structures increases.

7-4 APPLICATIONS OF ARAMID FIBER-REINFORCED COMPOSITES

Kevlar® 49 is the aramid fiber of greatest interest to industry. The unusual combination of properties in Kevlar® 49 composites has resulted in many uses in aerospace (Ref. 12), aircraft (Refs. 13 and 14), marine, and numerous commercial products (Refs. 15 and 16). Some of these properties are weight savings, increased stiffness, and increased strength. Other valuable characteristics of these composites include damage resistance, fatigue strength, creep resistance, vibration dampening, useful electrical properties, dimensional stability, useful elevated temperature range, and environmental stability. Also Kevlar® 49 can be combined with graphite or fiberglass to achieve hybrid structures with an even more desirable blend of properties.

Aramid is used in filament-wound pressure vessels and solid rocket motor cases. For these applications light weight, strength, high modulus, and good fatigue and creep characteristics are needed, and the low density and high tensile strength of aramid are used to increase structural performance. The space shuttle contains 17 spherical pressure vessels, which store various gases and liquids including oxygen and nitrogen. Each vessel has a metal liner and is overwrapped with aramid-reinforced epoxy. Use of such a composite gives a weight reduction of about 200 kg (440 lbm) or 26% of the weight of all-metal vessels.

On the Boeing 747 SP aircraft the escape slide and life raft systems are activated by pressurized gases stored in metal-lined pressure vessels overwrapped with aramid fiber in an epoxy matrix. Each 747 SP uses 10 vessels and each vessel weighs 9 kg (20 lbm). The use of such a composite in these vessels saves 9 kg (20 lbm) per unit over steel pressure vessels, which is a 50% weight reduction.

The Trident C-4 is a three-stage, submarine-launched missile that is capable of delivering nuclear weapons to distant targets. The rocket engine cases of all three stages of the C-4 missile are made of filament-wound Kevlar® 49 composite material. Aramid fiber has been used because of its light weight and high tensile strength. Use of these composites increases the range and payload capability of this missile.

Aramid composites are used in non- and semistructural parts of aircraft where stiffness, strength, and weight savings are important. Generally, weight reductions for these composite structures are in the 20 to 35% range compared to weights of present metallic structures. Such weight savings means increased payload and range or reduced fuel requirements for the aircraft.

To improve the bird-strike resistance of the USAF A-10 Thunderbolt II leading edge segments of the wing, a hybrid structure of Kevlar® epoxy and graphite-epoxy is used. A laminate, constructed of Kevlar® tape and fabric as a core material and graphite tape plies as the outer surface, will withstand direct impact of a 1.90-kg (4.2-lbm) bird at speeds up to 155 m/s (508 ft/s) without visual damage to the laminate (Ref. 17).

Interior cabin applications for these composites include window reveals, overhead storage bins, lavatories, seats, and ceiling panels. Weight savings are particularly important for the short takeoff and landing (STOL) type of aircraft. A service evaluation of wing-to-body fairing panels of Kevlar® 49 in an epoxy matrix resin on the L-1011 indicates excellent performance after 5 yr in flight. Aramid composite wing trailing and leading edges, motor nacelles, and pylons are now in service on the L-1011. Control surface trailing edges are also made of the aramid composite. If only these applications are considered, a weight reduction of 363 kg (800 lbm) per aircraft has been achieved compared to the weights of the original aluminum and fiberglass composite structures. Other components that can be made with aramid composites include landing gear doors, fairings, access doors, wing flaps, instrument panels, and consoles. A lightweight composite radome has excellent radar transmission properties.

Aramid composites are used in helicopters (Ref. 18) in fairings, doors, access panels, and instrument consoles. Weight reductions are in the 25% range because 65% of the outer skin surface is made of aramid-reinforced composites.

Aramid composites are used to reinforce hulls, decks, and bulkheads in many types of boats because they offer weight savings, increased stiffness, and increased damage resistance. These improvements mean increased performance (e.g., speed, range, and fuel economy), safety, durability, and ease of handling.

Aramid composites are being evaluated for use in vehicle parts in which stiffness, strength, damage resistance, fatigue resistance, and vibration damping properties are important. Also weight savings lead to fuel economy. Although these applications are automotive oriented, their successful use will lead to adaptation to military vehicles.

The use of reinforced plastics in automobiles is limited to some extent by present manufacturing methods. Most of the high-cost, highly labor-intensive methods used by the aircraft industry are not adaptable to use in the automotive industry. The development of efficient, low-cost production methods for mass production of composite auto parts would accelerate and expand the use of composites in military vehicles.

There are many other possible uses for composites of aramid fiber. These include space structures, primary structures on aircraft and helicopters, energy-generation devices, and civil engineering structures. As engineers become more aware of the benefits of using composites and as the cost of composites decreases, more applications will be developed.

7-5 APPLICATIONS OF BORON FIBER-REINFORCED COMPOSITES

Boron-epoxy composites are attractive to military designers because of their superior mechanical properties, i.e., high strength and stiffness coupled with low density. Boron fibers have been adapted to numerous applications primarily in the aerospace industry. Typical applications for aircraft are listed in Table 7-2.

The use of boron-epoxy composites outside of aerospace activities is not widely reported. This fact suggests limited use in critical structural applications. Use will continue with the expectation that cost of the basic fiber will decrease. Applications in the commercial sector for a number of sporting goods products may lead to higher volume production, which would lower fiber costs.

TABLE 7-2. AIRCRAFT APPLICATIONS OF BORON-EPOXY COMPOSITES (Refs. 2, 19, and 20)

APPLICATION	COMPONENT(S)
F-15	Empennage, cabin floor, and stabilizer
F-14A	Horizontal stabilizer box, overwing, and fairing
Uttas Helicopter	Structural beam reinforcement
F-111	Wing tracking edge panel
C-141	Gear pod door
F-4	Rudder
C-5A	Leading edge slat
B-1B	Dorsal longeron laminate and horizontal stabilizer

REFERENCES

1. J. V. Milewski and H. S. Katz, *Handbook of Reinforcements for Plastics*, Van Nostrand Reinhold Co., New York, NY, 1987.
2. *Engineered Materials Handbook, Volume 1, Composites*, ASM International, Materials Park, OH, 1987.
3. B. R. Norton, *Engineering Applications of Composites*, Academic Press, New York, NY, 1974.
4. A. M. Shibley, "Filament Winding", *Handbook of Composites*, Van Nostrand Reinhold Co., New York, NY, 1982, pp. 449-78.
5. R. N. Hadcock, "The Application of Advanced Composites to Military Aircraft", *Proceedings of the 10th International Council of the Aeronautic Sciences (ICAS) Congress*, Ottawa, Canada, 3 October 1978.
6. W. R. Greszczuk and A. V. Hawley, *Application of Advanced Composites to Patrol Craft Hydrofoils*, US Naval Ship Systems Command, Washington, DC, April 1973.
7. M. Martin and J. F. Docken, Jr., "Composites in Land Transportation", *Handbook of Composites*, Van Nostrand Reinhold Co., New York, NY, 1982, pp. 679-98.
8. H. M. Hawthorne, "Carbon Fibers: Their Composites and Applications", *Proceedings of the First International Conference on Carbon Fibers*, Plastics Institute, London, England, February 1971.
9. P. G. Riewald and C. Zeber, "Kevlar® 49 Hybrid Composites for Commercial and Aerospace Applications", Section 14-B in *Proceedings of the Thirtieth Annual Technical Conference*, Washington, DC, 4-7 February 1975, Society of Plastics Industry, Reinforced Plastics/Composites Institute, New York, NY.
10. R. Kaiser, "Technology Assessment of Automotive Uses of Advanced Composite Materials", *Proceedings of the Society for the Advancement of Material and Process Engineering (SAMPE) Twenty-Fourth National Symposium*, Vol. 24, San Francisco, CA, May 1979, pp. 904-15, Society for the Advancement of Material and Process Engineering, Covina, CA.
11. J. J. Hoover, "Marine Application for Graphite Composites", *Proceedings of the Society for the Advancement of Material and Process Engineering (SAMPE) Twenty-Third National Symposium*, Vol. 23, Anaheim, CA, May 1978, pp. 1230-37, Society for the Advancement of Material and Process Engineering, Covina, CA.
12. D. L. G. Sturgeon, D. G. Wagle, and R. A. Woffe, "Kevlar® 49 Woven and Nonwoven Fabric Composites—Performance and Applications", *19th National*

SAMPE Symposium *Exhibition*, Vol. 19, Buena Vista, CA, April
Park, CA, April 1974, pp. 304-19, Society of Aerospace Material and
Advancement of Mate ess Engineering, Covina, CA.
Covina, CA. Nolet and P. M. Sandusky, "Impact Resistant

13 J. M. Wooley, "Flight rid Composite for Aircraft Leading Edges",
49/Epoxy Composite *eedings of the 31st International Symposium*
mercial Transport A *Exhibition*, Covina, CA, 1986, pp. 836-43,
Service Report, Repo ety of Aerospace Material and Process Engineer-
Lockheed Aircraft C Covina, CA.
1974. Beziac, "Application of Composite Materials in

14. H. F. Click, "Applica icopter Fabrication", *Kevlar® in Aircraft*
Composites on the Y *mary, Technical Symposium IV*, Geneva, Switzer-
ceedings of the Sixth , January 1983.
Conference, Vol. 6, CE. DeBolt, "Boron and Other High-Strength,
352-60, Society of Aeh-Modulus, Low-Density, Filamentary Reinforc-
Engineering, Covina, Agents", *Handbook of Composites*, Van Nostrand

15. C. H. Miner, R. A. hold Co., New York, NY, 1982, pp. 171-94.
"Kevlar® 49 Aramid, G. Hansen, D. Lossee, and W. L. O'Brien,
Construction", *Proce* vanced Composites for the B-1B Bomber—An
peake Sailing Yacht rview", *Proceedings of the 31st International*
January 1975. *MPE Symposium and Exhibition*, Los Angeles,

16. D. L. G. Sturgeon, *et a.* 1986, pp. 712-24, Society for the Advancement
Sporting Goods and Material and Process Engineering, Covina, CA.
ceedings of the 19th I

ment-wound Kevlar® 49
er has been used because
ile strength. Use of these
nd payload capability of

non- and semistructural
s, strength, and weight
y, weight reductions for
in the 20 to 35% range
metallic structures. Such
l payload and range or
e aircraft.
resistance of the USAF
e segments of the wing, a
xy and graphite-epoxy is
Kevlar® tape and fabric
tape plies as the outer
mpact of a 1.90-kg (4.2-
s (508 ft/s) without visual
).
these composites include
ge bins, lavatories, seats,
ings are particularly im-
l landing (STOL) type of
of wing-to-body fairing
oxy matrix resin on the
rmance after 5 yr in flight.
and leading edges, motor
n service on the L-1011.
e also made of the aramid
ations are considered, a
lbm) per aircraft has been
s of the original aluminum
tures. Other components
mposites include landing
rs, wing flaps, instrument
eight composite radome
n properties.
in helicopters (Ref. 18) in
and instrument consoles.
5% range because 65% of
de of aramid-reinforced

to reinforce hulls, decks,
f boats because they offer
ss, and increased damage
its mean increased per-
nd fuel economy), safety,
g.
ng evaluated for use in
, strength, damage resist-
ration damping properties
ngs lead to fuel economy.
are automotive oriented,
o adaptation to military

GLOSSARY

A

Aging. The effect on materials of exposure to an environment for an interval of time.

Air-Bubble Void. Air entrapment within and between the plies of reinforcement.

Anisotropic. Exhibiting different properties when tested along axes in different directions (anisotropy).

Autoclave Molding. Fabrication method employing high temperature and pressure.

Axial Winding. In filament-wound reinforced plastics, a winding with the filament parallel to the axis.

B

Bag Molding. A technique in which the consolidation of the material in the mold is effected by application of fluid pressure through a flexible membrane.

Bubble. An internal void or globule of air or other gas trapped within a plastic.

Buckling. Crimping of fibers in a composite material that often occurs in glass-reinforced thermosets due to resin shrinkage during cooling.

C

Circuit (Filament Winding). One complete traverse of the fiber feed mechanism of a winding machine; one complete transverse of a winding band from one arbitrary point along the winding path to another point on a plane through the starting point and perpendicular to the axis.

Composite. A material created by the synthetic assembly of two or more materials (a selected filler or reinforcing element and a compatible matrix binder) to obtain specific characteristics and properties.

Compression Mold. A mold that is open when the material is introduced and that shapes the material by heat and by the pressure of closing.

Continuous Filament Yarn. Yarn formed by twisting two or more continuous filaments into a single, continuous strand.

Coupling Agent. Any chemical substance designed to react with both the reinforcement and matrix phases of a composite material to make a stronger bond at the interface.

D

Denier. A yarn and filament numbering system in which the yarn number is equal to the weight in grams of 9000 meters. The lower the denier, the finer the yarn.

E

Elongation. Deformation caused by stretching; the fractional increase in length of a material strained in tension.

Environmental Stress Cracking. The susceptibility of a resin to crack or craze in the presence of surface active agents or other environments.

Epoxies. Plastics based on resins made by the reaction of epoxides with other materials, such as amines, alcohols, phenols, carboxylic acids, acid anhydrides, or unsaturated compounds.

F

Fabric. A material constructed of interlaced yarns, fibers, or filaments, usually a planar structure. (Nonwovens are sometimes included in this classification.)

Fiber, Staple. Glass fiber of relatively short length, i.e., generally less than 0.43 m (17 in.).

Fiberglass. An individual filament made from molten glass. *See also* Fiber, Staple, *and* Filament, Continuous.

Filament, Continuous. Glass fiber of great or indefinite length.

Filament Winding. A process for fabricating a composite structure in which continuous reinforcements (filament, wire, yarn, tape, or other) that were either previously impregnated with a matrix material or impregnated during the winding are placed over a rotating and removable form or mandrel in a specified way to meet certain stress conditions.

G

Glass Finish. A material applied to the surface of a glass reinforcement to improve the effect upon the physical properties of the reinforced plastics.

Graphitization. The process of pyrolization in an inert atmosphere at a temperature in excess of 1800°C (3272°F), usually as high as 2700°C (4892°F). This process produces a graphite crystal structure.

H

Hand Lay-Up. The process of placing and working successive plies of reinforcing material or resin-impregnated reinforcement in position by hand on a mold.

High-Pressure Laminates. Laminates molded and cured at pressures not lower than 6.89 MPa (1000 psi) and more commonly in the range of 8.27-13.8 MPa (1200-2000 psi).

Honeycomb. Manufactured product of resin-impregnated sheet material formed into hexagonal-shaped cells. Used as a core material in sandwich constructions.

I

Isotropic Laminate. One in which the strength properties are equal in all directions.

L

Low-Pressure Molding. The distribution of relatively uniform low pressure (1.38 MPa (200 psi) or less) over a resin-bearing fibrous assembly of glass, carbon-graphite, boron, aramid, or other material with or without application of heat from external sources to form a structure possessing definite physical properties.

M

Mandrel. The core around which fabric, resin-impregnated glass, or other fibrous material is wound to form pipes, tubes, or vessels.

Mat. A fibrous material for reinforced plastic consisting of randomly oriented chopped filaments or swirled filaments with a binder; available in blankets of various widths, weights, and lengths.

Matched Metal Molding. A reinforced plastics manufacturing process in which matching male and female dies are used to form the part—as opposed to low-pressure laminating or spray-up.

Monofilament. A single fiber or filament of indefinite length generally produced by extrusion; a continuous fiber of sufficient size to serve as a yarn in normal textile operations.

N

Nonwoven Fabric. A planar structure produced by loosely bonding together yarns or rovings.

P

Polyesters. Thermosetting resins, produced by reacting unsaturated, generally linear, alkyd resins with a vinyl-type active monomer, such as styrene, methylstyrene, and diallyl phthallate cure.

Polyimide. A polymer produced by heating of polyamic; highly heat-resistant resin suitable for use as a binder or an adhesive.

Pressure Bag Molding. A process for molding reinforced plastics in which a tailored flexible bag is placed over the contact lay-up on the mold, sealed, and clamped in place. Fluid pressure, usually compressed air, is placed against the bag and the part is cured.

Pultrusion. Reversed extrusion of resin-impregnated roving in the manufacture of rods, tubes, and structural shapes of a permanent cross section. The roving, after passing through the resin dip tank, is drawn through a die to form the desired cross section.

R

Roving (Filament Winding). A collection of bundles of continuous filaments either as untwisted strands or twisted yarns. Rovings may be lightly twisted, but for filament winding they are generally wound as bands or tapes with as little twist as possible. Glass rovings are predominantly used in filament winding.

S

Sandwich Constructions. Panels composed of a lightweight core material—honeycomb or foamed plastic—to which two relatively thin, dense, high-strength faces, or skins, are adhered.

T

Transfer Molding. Method of molding thermosetting materials in which the plastic is softened by heating in a transfer chamber and then forced by high pressure through suitable sprues, runners, and gates into the closed mold for final curing.

V

Vacuum Bag Molding. A process for molding reinforced plastics in which a flexible, transparent sheet is placed over the lay-up on the mold and sealed. A vacuum is applied between the sheet and the lay-up. The entrapped air is mechanically worked out of the lay-up and the part is cured.

Y

Yarn. An assemblage of twisted fibers or strands, either natural or manufactured, to form a continuous yarn suitable for weaving.

INDEX

A

B

C

M

N

O

P

Q

R

S

T

V

W

Y

Custodian:
Army—AR

Review Activity:
Army—MR

Preparing activity:
Army—AR

(Project 9330-A056)

STANDARDIZATION DOCUMENT IMPROVEMENT PROPOSAL

INSTRUCTIONS

1. The preparing activity must complete blocks 1, 2, 3, and 8. In block 1, both the document number and revision letter should be given.
2. The submitter of this form must complete blocks 4, 5, 6, and 7.
3. The preparing activity must provide a reply within 30 days from receipt of the form.

NOTE: This form may not be used to request copies of documents, nor to request waivers, or clarification of requirements on current contracts. Comments submitted on this form do not constitute or imply authorization to waive any portion of the referenced document(s) or to amend contractual requirements.

I RECOMMEND A CHANGE	1. DOCUMENT NUMBER	2. DOCUMENT DATE (YYMMDD)
	MIL-HDBK-754(AR)	910919

3. DOCUMENT TITLE
Plastic Matrix Composites With Continuous Fiber Reinforcement

4. NATURE OF CHANGE *(Identify paragraph number and include proposed rewrite, if possible. Attach extra sheets as needed.)*

5. REASON FOR RECOMMENDATION

6. SUBMITTER

a. NAME (Last, First, Middle Initial)	b. ORGANIZATION
c. ADDRESS (Include Zip Code)	d. TELEPHONE (Include Area Code) (1) Commercial (2) AUTOVON (If applicable)
	7. DATE SUBMITTED (YYMMDD)

8. PREPARING ACTIVITY

a. NAME	b. TELEPHONE (Include Area Code)
Commander US Army Armament Research, Development, and Engineering Center	(1) Commercial: 201-724-3189 (2) AUTOVON: 880-3189
c. ADDRESS (Include Zip Code) ATTN: SMCAR-BAC-S Picatinny Arsenal, NJ 07806-5000	IF YOU DO NOT RECEIVE A REPLY WITHIN 45 DAYS, CONTACT: Defense Quality and Standardization Office 5203 Leesburg Pike, Suite 1403, Falls Church, VA 22041-3466 Telephone (703) 756-2340 AUTOVON 289-2340

DD Form 1426, OCT 89 *Previous editions are obsolete.* 198/290