Downloaded from http://www.everyspec.com

MIL-HDBK-728/3
16 December 1985

# MILITARY HANDBOOK

# LIQUID PENETRANT TESTING

NO DELIVERABLE DATA REQUIRED BY THIS DOCUMENT

AMSC N/A

AREA NDTI

DISTRIBUTION STATEMENT A Approved for Public Release; Distribution Unlimited.

Downloaded from http://www.everyspec.com



TABLE OF CONTENTS - CHAPTER 3


| Section | | Page |
|---|---|---|
| 3.0 | Safety Notice | 3.0-1 |
| 3.1 | Introduction | 3.1-1 |
| 3.2 | Basic Principles | 3.2-1 |
| 3.2.1 | Contact Angles and Interfacial Energies | 3.2-4 |
| 3.2.2 | Visual Detection | 3.2-6 |
| 3.3 | Equipment and Materials | 3.3-1 |
| 3.3.1 | General Facilities | 3.3-1 |
| 3.3.2 | Penetrants | 3.3-7 |
| 3.3.3 | Emulsifiers | 3.3-7 |
| 3.3.4 | Solvent Removers (Cleaners) | 3.3-8 |
| 3.3.5 | Developers | 3.3-8 |
| 3.3.6 | Special-Purpose Penetrant Materials | 3.3-8 |
| 3.4 | Basic Procedures and Techniques | 3.4-1 |
| 3.4.1 | Cleaning Methods | 3.4-1 |
| 3.4.2 | Quality Control Methods | 3.4-2 |
| 3.4.3 | Wettability Test | 3.4-3 |
| 3.4.4 | System Qualification Methods | 3.4-3 |
| 3.4.5 | Techniques to Aid Penetration | 3.4-8 |
| 3.5 | Standards | 3.5-1 |
| 3.6 | Applications | 3.6-1 |
| 3.7 | Specific Guidelines | 3.7-1 |
| 3.7.1 | Guidelines for Designers | 3.7-1 |
| 3.7.2 | Guidelines for Production Engineers | 3.7-1 |
| 3.7.3 | Guidelines for QA | 3.7-2 |
| 3.7.4 | Guidelines for NDT Engineers | 3.7-2 |
| 3.7.5 | Guidelines for NDT Technicians | 3.7-3 |
| 3.8 | Safety | 3.8-1 |
| 3.9 | Glossary | 3.9-1 |
| 3.10 | Bibliography | 3.10-1 |
| 3.11 | Index | 3.11-1 |

Downloaded from http://www.everyspec.com



# 3.0 SAFETY NOTICE

Liquid penetrant testing uses chemicals which often are flammable. They also can be toxic and/or an irritant to human eyes, skin, and lungs. Therefore, proper chemical storage facilities, proper ventilation of working area, and adequate protective dust masks, goggles, face shields and/or clothing are safety considerations for this test method. When fluorescent penetrants are used, the danger of ultraviolet radiation from defective black lights is an important consideration. Additional safety comments are presented in Section 3.8.

Downloaded from http://www.everyspec.com



THIS PAGE INTENTIONALLY LEFT BLANK

Downloaded from http://www.everyspec.com



## 3.1 INTRODUCTION

Liquid penetrant testing is one of the more extensively used NDT methods. It is used to find surface flaws and is fairly rapid and inexpensive even for large parts. It is often called "dye penetrant" or just "penetrant" testing. "Liquid penetrant" is used here to distinguish it from tests where "gas penetrants" are used, either as a tracer for a gas analyzer or as a radioactive gas for radiation detection.

This chapter presents the fundamental principles and guidelines associated with liquid penetrant testing. It includes the basic theory of operation, the equipment and materials used, the advantages and disadvantages of the method, various applications and standards, and guides for specific disciplines. Chapter 1 contains general NDT information that should be studied along with this chapter for a more complete understanding of penetrant testing and its comparison with other methods.

Downloaded from http://www.everyspec.com



THIS PAGE INTENTIONALLY LEFT BLANK

Downloaded from http://www.everyspec.com



## 3.2 BASIC PRINCIPLES

The basic principles of liquid penetrant testing involve interfacial energies or wetting characteristics between liquids and solids and observation enhancements by contrast. Before these basic principles are considered, a summary of six basic steps associated with liquid penetrant testing is given.

Figure 3.2(1) outlines these six basic steps. They are: 1) precleaning of the surface, 2) application of the penetrant, 3) allowing time for penetrant to enter the flaws, 4) removing excess penetrant, 5) applying developer, and 6) waiting for appearance of indications. After these six steps have been completed, the surface is ready for inspection and evaluation. Each of these steps is briefly described as follows:

Step 1. The surface to be inspected must be cleaned in such a way that the surface flaws present will be free of dirt, water, grease, or other foreign matter that would interfere with the penetrant entering each flaw. In many cases, depending upon the previous handling or processing of the part, the surface will be adequately clean without any additional cleaning. However, if potential flaws could be covered by metal flakes or "smears" due to a machining process, an etch that removes the upper layer of the surface may be required to ensure that openings to the flaws are established. The success of this step will depend upon knowledge of the part, the potential sources of contamination, and the means necessary to remove those contaminations. No flaw can be detected by the liquid penetrant method unless the flaw is open to the surface. Failure to remove contamination from a flaw can interfere with the effectiveness of this method.

One important step in the cleaning operation is to thoroughly dry the part. If the cleaning operation results in merely replacing one foreign material with another (the cleaning fluid, for example), the test may not be any more successful than it would have been without the cleaning process. Adequate time for drying must therefore be allowed. The use of hot air blasts or drying ovens can reduce this drying time.

Step 2. The penetrant can be applied by any one of several means. It can be sprayed; applied by brush, rags, or mops; or by completely dipping or submerging the part in a vat containing the penetrant. The important point is that the penetrant must cover the entire surface to be inspected.

Downloaded from http://www.everyspec.com



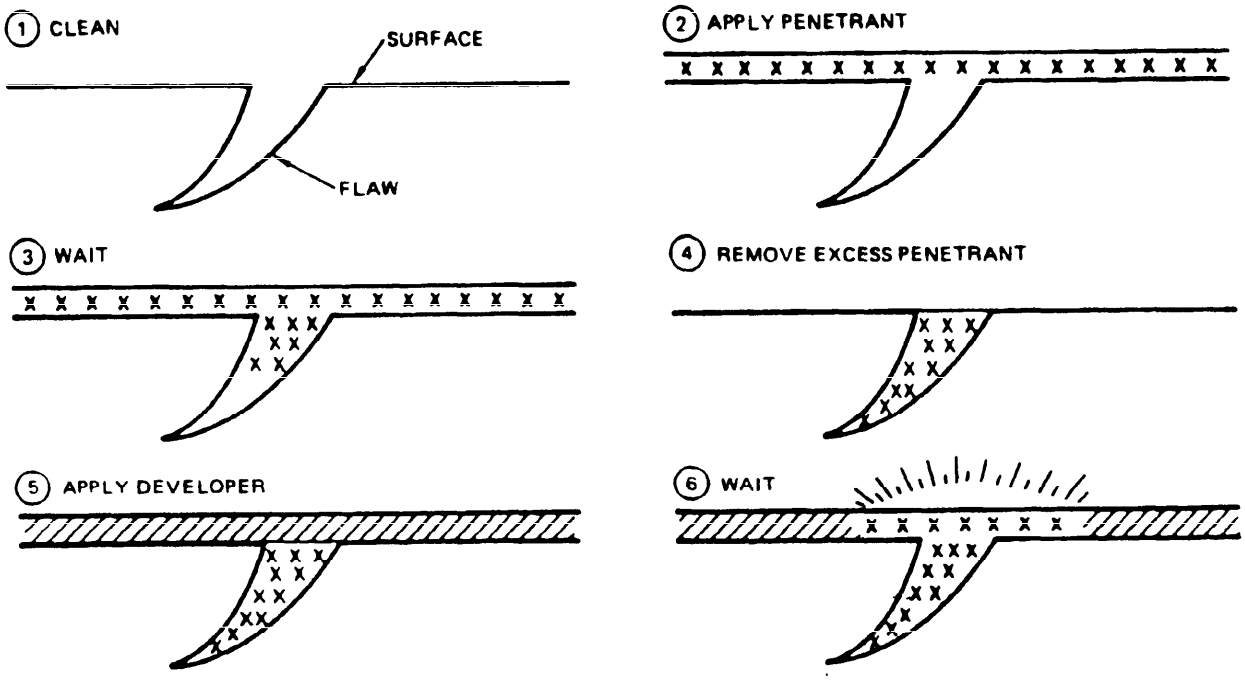


Figure 3.2(1). The six basic steps of liquid penetrant testing.

(WARNING - No penetrant should ever be used on a surface without ensuring that the penetrant is chemically compatible with the material. Both long-term and short-term effects must be considered. Additional coverage of this subject is to be found in Section 3.3.6.)

Step 3. After the liquid penetrant has been applied, sufficient time must be given to allow the penetrant to enter any flaws that are present. This is called the dwell time. The dwell time required varies with the type of penetrant, the type and size of the flaws, and the contact angle (a function of the surface material and penetrant interfacial energies, the cleanliness of the surface, the temperature, etc.). Generally the longer the waiting time, the greater the assurance that all flaws have been penetrated. There is a danger, however, in waiting too long. If the penetrant can dry or congeal in the time waited, then the effectiveness of the test will be impaired.

Downloaded from http://www.everyspec.com



Step 4. After the penetrant has entered all exposed flaws, then the penetrant that remains on the surface must be removed. This is often referred to as the "washing" of the part. It may be as complicated as an actual washing or spraying of the part with a cleansing liquid, or as simple as wiping the part clean with a solvent-moistened rag. The guide to a proper cleaning involves two considerations: the cleaning must be adequate to remove the penetrant from the portion of the surface that is free of flaws (otherwise, a loss of contrast between indications of defects and the background will result), but not so extensive that penetrant is removed from the flaws to be detected. Normally, this balance is not difficult to achieve. But when very shallow flaws are to be detected and the surface is very rough, the ability to achieve the proper cleaning can become impossible.

If the cleaning process involves water or other cleaning liquid, a proper drying time must sometimes be allowed. This drying time can again be decreased by the use of drying ovens or ventilation systems. The drying must not result in the removing or the solidifying of the penetrant that remains in the surface flaws.

Step 5. Once the excess penetrant is removed, and where required, the surface is dried, a developer is usually applied. The developer can be applied as a spray. It is important that the developer is not applied too thickly; a thin, uniform layer being desired. The developer accomplishes two basic tasks. It provides a contrasting background so that the penetrant can easily be seen or detected. Therefore, the penetrant, normally a very deep, bright color, would require the developer to be a white powder, or other contrasting color. The developer also acts as a "sponge" or absorber of the penetrant so that it draws the penetrant out of the flaws and spreads it into a region on the surface large enough to be seen. Many popular penetrants do not need a developer.

Step 6. After the developer is applied, time must be allowed for the penetrant to be drawn out of the flaws by the developer. Normally, the longer this waiting time, the greater will be the indications. Long waiting times will, however, result in the greatest difference between the shape of the indications and the shape of the actual flaws, and may sometimes, therefore, be undesirable. Too long a waiting time can also allow indications to "run together" to give the appearance of one large flaw when several separate flaws might actually exist.

Downloaded from http://www.everyspec.com



These basic steps are not fixed. Many methods or procedures are found that combine these steps in different ways or add additional steps. Most procedures include a cleaning operation that follows the inspection. But these basic steps are simple and, in each individual case, the exact details required are not usually difficult to determine. This brief introduction is sufficient for us to consider some of the basic physics used in liquid penetrant testing.

The basic physics involves two general areas: interfacial energies (or the contact angles mentioned in Step 3) and visual detection capabilities based upon contrast (mentioned in Step 5, and required in the inspection).

### 3.2.1 CONTACT ANGLES AND INTERFACIAL ENERGIES

Figure 3.2(2) shows a drop of liquid on a surface with three different contact angles, $\theta$. When the contact angle ($\theta$) is greater than 90 degrees, the liquid does not "wet" the surface. When the contact angle is less than 90 degrees, wetting between the liquid and the surface occurs. The contact angle, for a good penetrant, should be zero. This theoretically results in a complete spreading of the penetrant over the surface and the penetration into all surface flaws. The contact angle is a function of interfacial energies (usually referred to as "surface tension," a misnomer). Interfacial energies and "surface tension" forces are numerically equal.

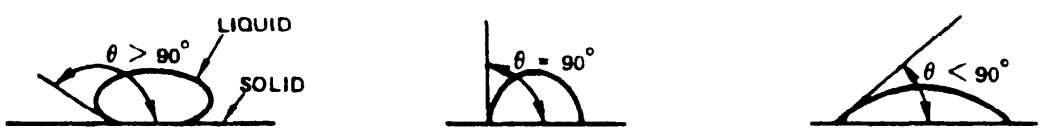


Figure 3.2(2). Contact angle ($\theta$) between a liquid and a solid surface.

Figure 3.2(3) shows a liquid drop on a solid surface with a contact angle, $\theta$. A gas is assumed to surround both. This gas is usually assumed to be at vapor equilibrium with the liquid.

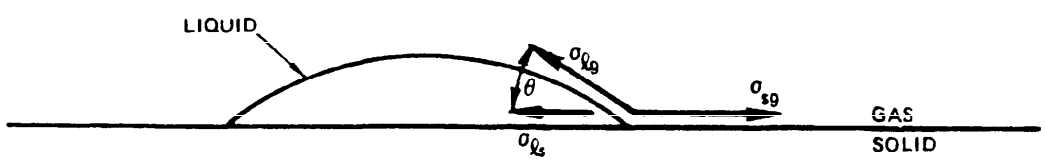


Figure 3.2(3). Contact angle ($\theta$) and interfacial energies.

Downloaded from http://www.everyspec.com



There are three interfacial energies involved with a contact angle: the interfacial energy between the solid-gas interface, $\sigma_{sg}$; the liquid-gas interface, $\sigma_{lg}$; and the liquid-solid interface, $\sigma_{ls}$. These forces must be at equilibrium at the point where they meet, the point that forms the contact angle. Equations 1 and 2 show this required balance, a balance between the horizontal components of the forces:

$$\sigma_{ls} + (\sigma_{lg})(\cos\theta) = \sigma_{sg} \qquad (1)$$

or

$$\theta = \arccos \frac{\sigma_{sg} - \sigma_{ls}}{\sigma_{lg}} \qquad (2)$$

For $\theta$ to equal zero, the term $(\sigma_{sg} - \sigma_{ls})/\sigma_{lg}$ must be equal to or greater than 1.

This occurs when the interfacial energy of the solid-gas interface is equal to (or greater) than the combined interfacial energies of the liquid-solid and the liquid-gas interfaces.

The interfacial energies are not always easy to measure, and they can vary greatly as various contaminations are present, but they are the parameters that determine the acceptability of a penetrant. If a liquid penetrant does not show good wetting action for a particular surface, it should not be used. As the contact angle increases, greater care and time must be given to help ensure that the liquid penetrant enters the flaws.

When small amounts of liquids are involved, such as the amount that can enter small flaws, interfacial energy forces are much larger than other forces, such as forces derived from gravity, pressures, vibration, etc. Therefore, when efforts are made to increase the penetration by the application of pressure or vibrations, etc., these actions are never harmful, but they do not normally result in measurable differences in the effectiveness of the penetrant. Time and, in some cases, temperature are the main external variables. Also, the worry is often expressed that the penetrant may not be able to enter where gas bubbles are trapped in a flaw. If the contact angle is zero, the penetrant will quickly spread around the trapped air and actually force it to the surface in most cases.

Interfacial energies are also at work in the developing stages, Steps 5 and 6. The developer, if it absorbs the penetrant away from the surface, will cause fresh penetrant in the flaws to spread back out onto the "dry" surface. In other words, the zero contact angle of the penetrant results in a spreading in all directions, not just into the flaws.

Downloaded from http://www.everyspec.com



### 3.2.2 VISUAL DETECTION

The ultimate success of liquid penetrant testing is the ability of the eye to discern an indication based upon the contrast between normal areas of a developer with an area that has absorbed penetrant.

The ability of the eye to accomplish this will depend upon the total area over which this differentiation exists, the sharpness of the edges, the degree of contrast, the efficiency of any contained phosphors and the illumination available. In order to increase the detection ability, some penetrants are made to be fluorescent. This effort, to be successful, must then include an adequate darkroom and ultraviolet light sources that can establish the fluorescence. A fluorescent contrast, under proper conditions, can be much greater than the contrast obtained under normal lighting. Therefore, understanding the physics of human visual requirements, proper eye accommodations for darkroom viewings, and measuring the output of ultraviolet lights - all become important in liquid penetrant inspection when fluorescent penetrants are used. Fluorscent liquid penetrants have been developed to be more sensitive than dye penetrants to the presence of small flaws. As a result, fluorescent penetrants are more popular than dye penetrants. It must constantly be kept in mind that there are differences in visual acuities for different individuals for different situations, and all these differences must be considered in assessing the acceptability of any of these inspection methods or procedures.

Downloaded from http://www.everyspec.com



## 3.3 EQUIPMENT AND MATERIALS

The equipment and materials used in liquid penetrant testing vary in several ways. First, the use of fluorescent penetrants may require a darkroom and ultraviolet lights. Whether fluorescent or visible-dye penetrants are used, there are in both cases different bases that these penetrants are made from that require different cleaning methods. A water-base penetrant can often be removed by a simple water washing process. Other penetrants are made from an oil base that require special solvents to be used. Some oil-base penetrants have emulsifiers, either added to the penetrant before it is applied or added afterwards, that allow a water washing to be used. Therefore, the choice of penetrant base will require different cleaning facilities and procedures. The developers used can be applied either by a wet or dry "bath," or by a spray. Each of these may require different facilities.

### 3.3.1 GENERAL FACILITIES

Figures 3.3(1) to 3.3(5) illustrate examples of different facilities for different combinations of penetrants and developers.

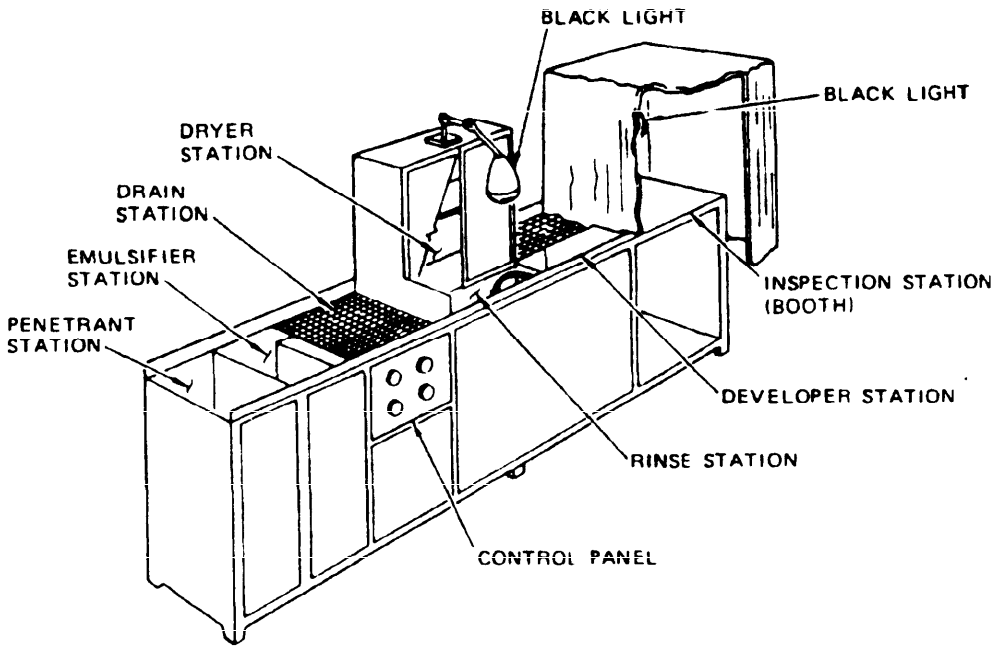


Figure 3.3(1). Typical small-sized test equipment employing fluorescent post-emulsified penetrant and dry developer.

Downloaded from http://www.everyspec.com



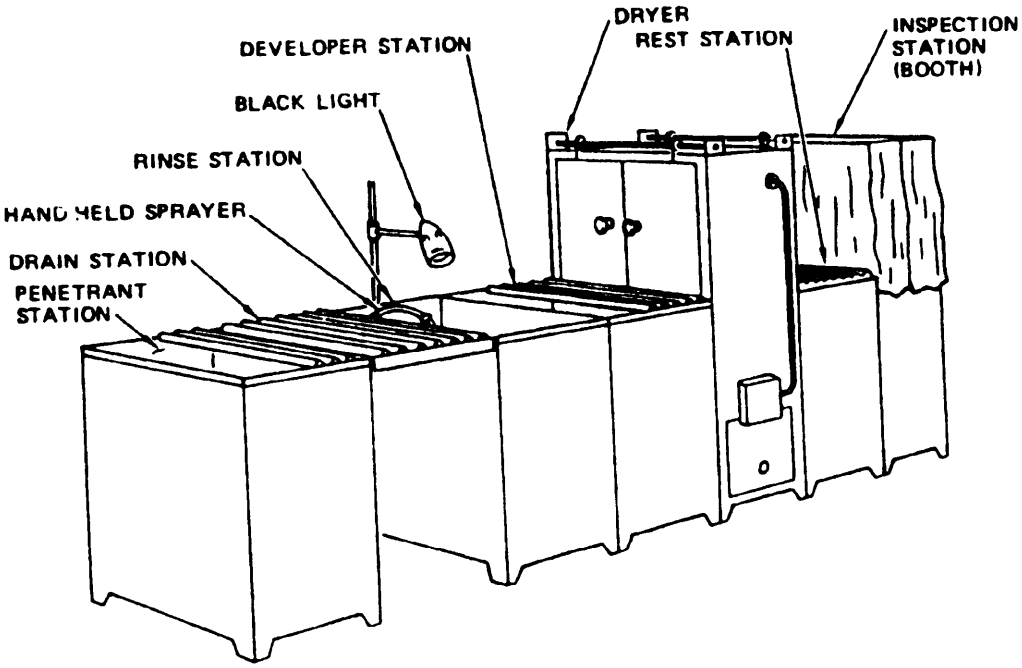


Figure 3.3(2). Typical medium-sized test equipment employing fluorescent water-washable penetrant and wet developer.

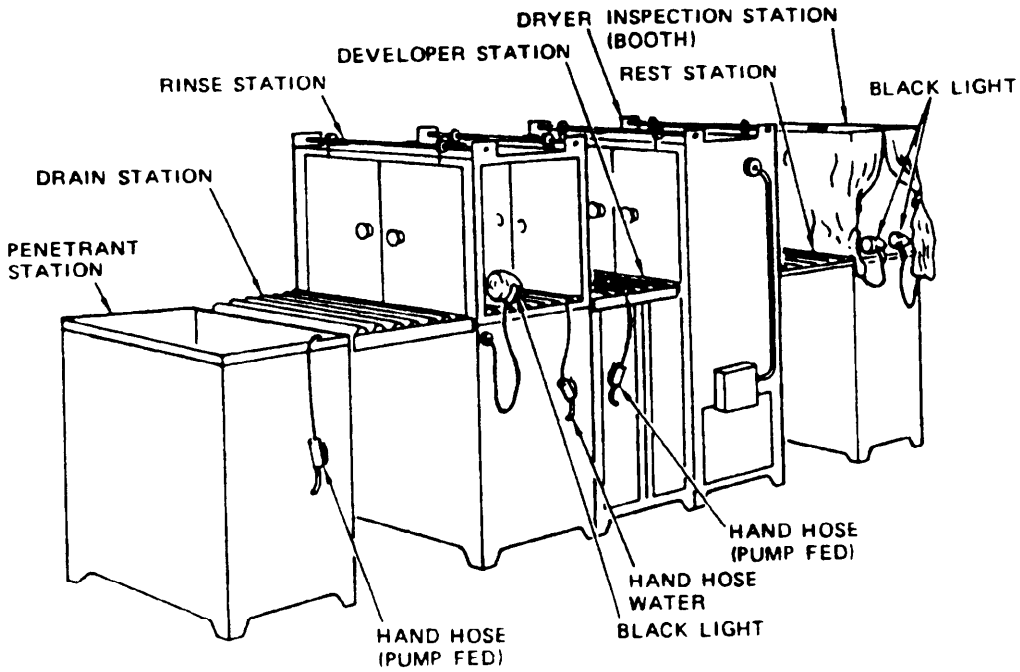


Figure 3.3(3). Typical large-sized test equipment employing fluorescent water-washable penetrant and wet developer.

Downloaded from http://www.everyspec.com



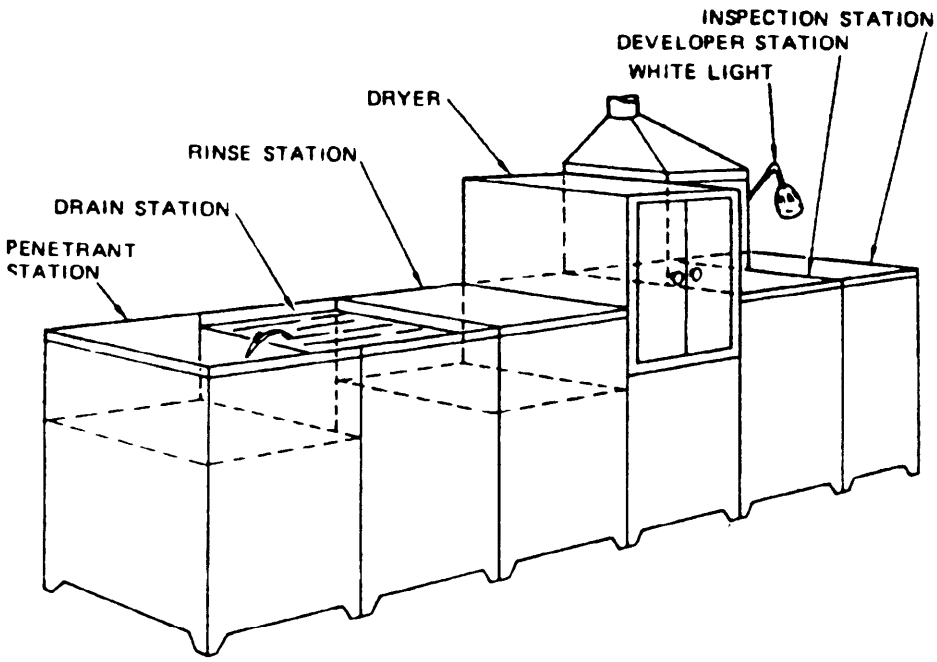


Figure 3.3(4). Typical medium-sized test equipment employing visible-dye water-washable penetrant and dry developer.

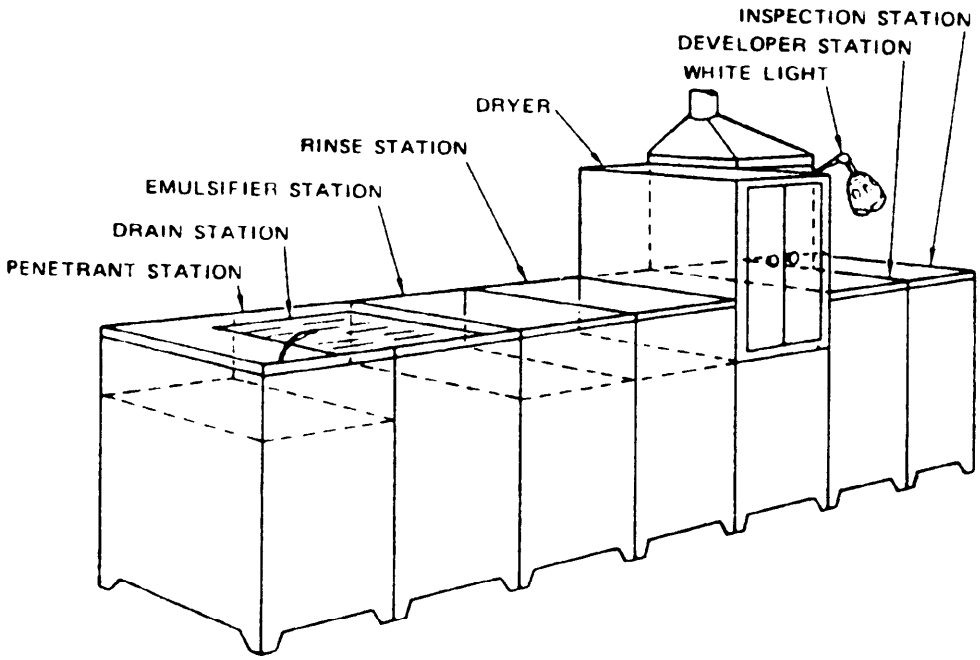


Figure 3.3(5). Typical medium-sized test equipment employing visible-eye post-emulsified penetrant and dry developer.

Downloaded from http://www.everyspec.com



The equipment used in liquid penetrant testing ranges from simple to fully automatic systems and varies in size, layout, and arrangement depending on the requirements of specific tests. The size of the equipment used is largely dependent upon the size and types of articles to be tested. The layout of the equipment, i.e., whether a "U," "L," or straight line, is determined by the facilities available, the production rate, and the required ease of handling. The number of stations is dependent on the process used.

When testing is required at a location remote from stationary equipment, or when only a small portion of a large specimen requires test, portable liquid penetrant kits are used. Both fluorescent and visible-dye penetrants are available in kits. The penetrant materials are usually dispensed from pressurized spray cans or applied by brush.

Figures 3.3(6) and 3.3(7) show examples of portable kits. With the portable fluorescent kit, a large black cloth or other "hood" must be provided for viewing the indications.

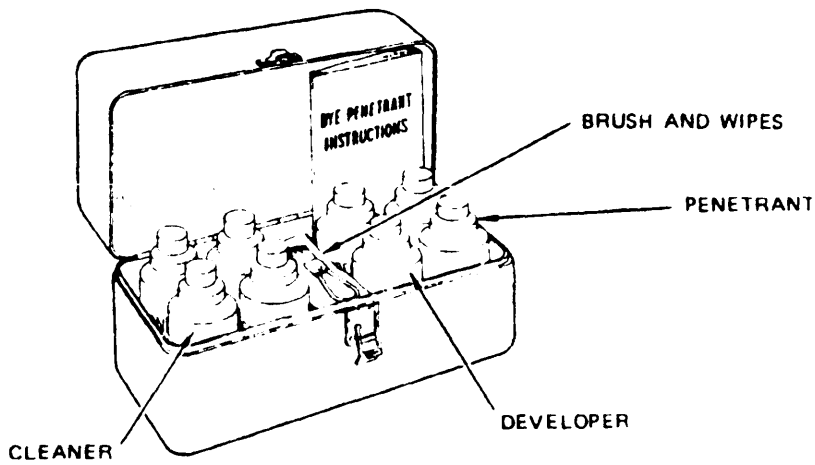


Figure 3.3(6). Typical visible dye portable kit.

Certain auxiliary equipment is often located at penetrant test stations. The auxiliary equipment may, in some instances, be "built-in" at one or more of the stations.

a. Pumps. Various pumps installed at the penetrant, emulsifier, rinse, and developer stations are used to agitate the solutions, to pump drain-off material into the proper tank for reuse, and to power hand-held sprayers and applicators.

Downloaded from http://www.everyspec.com



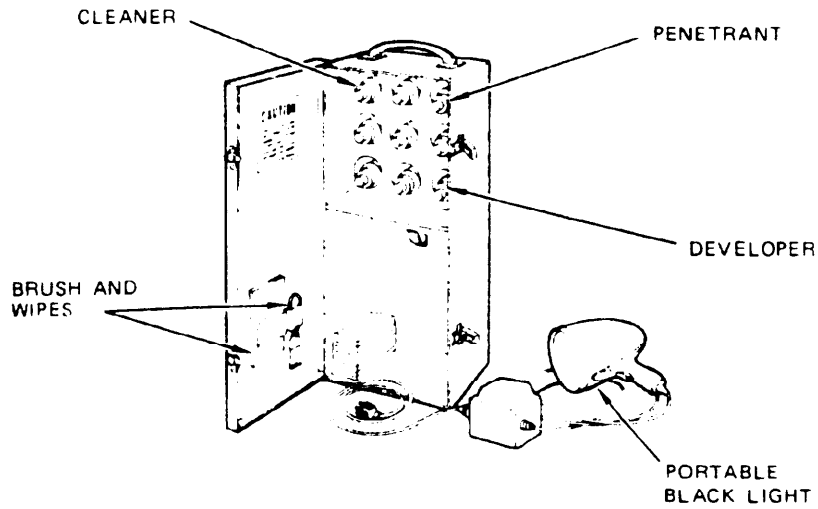


Figure 3.3(7). Typical fluorescent portable kit.

b. Sprayers and Applicators. Sprayers and applicators are frequently installed at the penetrant, emulsifier, rinse, and developer stations. They decrease test time by permitting rapid and even application of penetrant materials and water rinses. Both conventional and electrostatic sprayers are used.

c. Lights. White lights as well as black lights are installed as required to ensure adequate and correct lighting at all stations. When fluorescent materials are used, black light is installed at both the rinse and inspection stations.

d. Timers. One or more 60-minute timers with alarms are used to control penetrant, emulsifier, developing, and drying cycles.

e. Thermostats and Thermometers. These items are required and used to control the temperature of the drying ovens and penetrant materials.

f. Exhaust Fans. Exhaust fans are installed and used when testing is performed in closed areas. The fans facilitate removal of fumes and dust.

g. Hydrometers. Hydrometers are used to measure the specific gravity of water-based wet developers. The hydrometers used in liquid penetrant testing are floating type instruments (see Figure 3.3 (8)).

Downloaded from http://www.everyspec.com



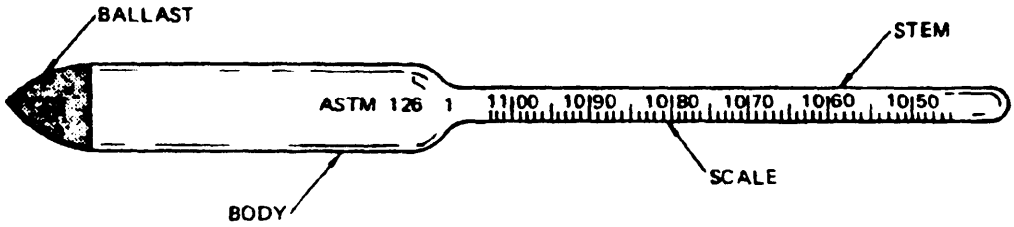


Figure 3.3(8). Typical hydrometer.

The black lights mentioned in c. are required in fluorescent penetrant testing, since they supply light of the correct wavelengths to cause fluorescent materials to fluoresce. The equipment for a light usually consists of a current regulating transformer, a mercury arc bulb, and a filter (see Figure 3.3(9)). The transformer is housed separately and the bulb and filter are contained in a reflector housing. For correct test results the lamp should produce an intensity of at least 800 microwatts/cm$^2$ at the test surface. (MIL-I-6866 stipulates at least 90 foot-candles at 15 inches from the light source.) The deep red-purple filter is designed to pass only those wavelengths of light that will activate the fluorescent material. It also filters out harmful ultraviolet radiation. If a filter is cracked, harmful rays could escape. Therefore, a cracked filter should never be used. The filter should be frequently cleaned since dust, dirt, and oil greatly reduce the intensity of the emitted light. In use, the full intensity of the lamp is not attained until the mercury arc is sufficiently heated. At least five minutes warmup is required to reach the required arc temperature. Since switching the lamp on and off shortens bulb life, once turned on the lamp is usually left on during the entire test or work period. If the black light is switched off, it may take up to ten minutes for the bulb to cool sufficiently to reestablish an arc.

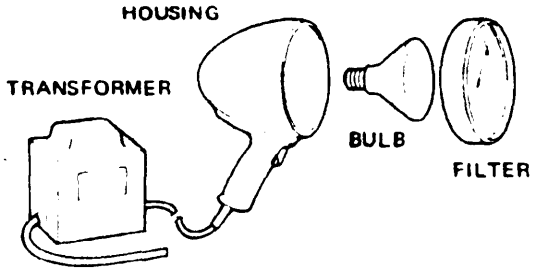


Figure 3.3(9). Typical portable black light.

Downloaded from http://www.everyspec.com



PENETRANTS

Penetrants can be categorized according to their color, whether they are a fluorescent or a visible dye; whether they can be removed by water, solvent or an emulsification process; or by the level of their sensitivity. Additional classifications may be their degree of toxicity, corrosive properties, viscosity, wetting ability, flashpoint, temperature stability, and/or their use for other special conditions or materials.

The simplest to use, but least sensitive of these penetrants, is the visible-dye or color-contrast penetrants. The visible-dye penetrants contain a dye, usually a bright red but sometimes a special color such as blue, that can be seen under ordinary white (visible) light.

Greatest "seeability" is obtained with fluorescent penetrants that are viewed under black light. The color of fluorescence is usually a brilliant yellowish-green. For special applications, there are fluorescent penetrants that glow red or blue. Dual sensitivity penetrants are made that contain a combination of visible and fluorescent dyes. The visible color is usually a bright red and the fluorescent color a yellow to orange-red. They permit gross discontinuities to be detected under visible light and questionable indications to be resolved under black light.

Post-emulsification penetrants have similar formulations to those of water-washable penetrants except they do not contain the emulsifying agent and consequently are not removable with water. These penetrants must be treated with a separate emulsifier before they can be removed by a water rinse or wash. Post-emulsification penetrants are available as either visible-dye or fluorescent penetrants.

The cost differences between these penetrants are not always great. Their basic differences in costs must, however, be considered along with the cost, time, and effort of the cleaning they might require or the other processes associated with their use. Generally, when extreme sensitivity is required on a difficult part, the post-emulsification fluorescent penetrant has the greatest advantage in terms of the most acceptable test results.

3.3.3 EMULSIFIERS

Emulsifiers when applied to a post-emulsification penetrant combine with the penetrant so as to make the resultant mixture water washable. The emulsifier, usually dyed orange to contrast with the penetrant, may be either lipophilic (an oil base) or hydrophilic (a detergent water base). The oil-based emulsifiers are usually employed as "contact" emulsifiers, i.e., they begin emulsifying on contact with the penetrant. Emulsification stops when water is applied. The hydrophilic, or water-based emulsifiers, also can be used as contact emulsifiers; but more often, the emulsifier is diluted with water and sprayed under pressure.

Downloaded from http://www.everyspec.com



### 3.3.4 SOLVENT REMOVERS (CLEANERS)

Solvent removers, or cleaners, are normally used in conjunction with oil base penetrants to remove excess penetrant from test article surfaces. Example solvent removers include methylene chloride, isopropyl alcohol, naphtha, and mineral spirits (paint thinner), in addition to special-formula proprietary removers. In selecting a solvent remover, those materials approved by the penetrant manufacturer should normally be used.

### 3.3.5 DEVELOPERS

Dry developer is a fluffy, chalk-like powder that is applied to dry test surfaces (after the removal of excess penetrant) for the purpose of absorbing penetrant from discontinuities and enhancing the resultant penetrant indications. Of the different developers available, dry developer is the most adaptable to rough surfaces and automatic processing. It is also the easiest to remove. Sensitivity is about the same as that of the water-soluble developer described in the following paragraph.

Water-based wet developers function similarly to dry developers except they can be applied prior to drying the test specimen. Two types of developer are available. In one, the developer particles are held in suspension in water and require continuous agitation to keep the particles in suspension. In the other, the developer powder is dissolved in water, forming a solution; once mixed they remain mixed. Of the two water-based wet developers, the water-soluble developer is usually the more sensitive.

Nonaqueous wet developer is a suspension of developer particles in a rapid-drying solvent. It is most often employed with solvent-removed penetrant processing, and, like dry developer, is applied only to dry surfaces. Of all the developers, the nonaqueous wet developer is the most sensitive in detecting fine discontinuities. The evaporation of the solvent carrier helps to draw the penetrant from discontinuities.

### 3.3.6 SPECIAL-PURPOSE PENETRANT MATERIALS

In addition to the conventional penetrants, emulsifiers, removers, and developers employed in liquid penetrant testing, there are low sulfur and low chlorine materials for testing nickel alloys, certain stainless steels, and titanium. Special-purpose inert materials are available for testing articles that come in contact with liquid oxygen, rubber, or plastic. Penetrants compatible for use with human food processing systems are also available. There are high temperature penetrants for testing hot welds, etc., and special penetrants for testing at low temperatures. There are supersensitive penetrants for detecting extremely fine discontinuities, and penetrants that provide sufficient contrast and sensitivity without a developer. There are low-energy emulsifiers and inhibited-solvent removers to slow down emulsification and the removal of excess penetrant. There are also wax and plastic film developers that absorb and fix penetrant indications to provide permanent records. The selection and usage of these materials are largely dependent on the particular process used and the controlling specifications or standards.

Downloaded from http://www.everyspec.com



## 3.4 BASIC PROCEDURES AND TECHNIQUES

There are many procedures and techniques that have been found to be effective in liquid penetrant testing. This section presents selected items on cleaning methods, quality control methods, wettability tests, system qualification methods, and aids for penetration. Many procedures and techniques have been formalized into standard specifications and are available in the literature.

### 3.4.1 CLEANING METHODS

In the cleaning of the parts, eight basic methods can be considered.

a. Detergent Cleaning. Immersion tanks and detergent solutions are a common means of accomplishing the cleaning required by liquid penetrant tests. The detergents wet, penetrate, emulsify and saponify (change to soap) various soils. Special attention should be given to the rinsing and drying. When thoroughly rinsed and dried, detergent cleaning leaves a test surface that is both physically and chemically clean.

b. Vapor Degreasing. Cleaning by vapor degreasing is particularly effective in the removal of oil, grease, and similar organic contamination. However, there are restrictions as to its use. Nickel alloys, certain stainless steels, and titanium have an affinity for specific elements (e.g., sulfur or chlorine) and if exposed to them will become structurally damaged. Degreasing must be limited to those materials that have been approved for this method of cleaning.

c. Steam Cleaning. Steam cleaning is particularly adaptable to the cleaning of large unwieldy articles not easily cleanable by immersion. The equipment required for steam cleaning of articles for liquid penetrant testing is the same as for other steam cleaning systems.

d. Solvent Cleaning. Solvent cleaning may use tanks for immersion, or the solvent material may be used in a wipe-on and wipe-off technique. Usually this cleaning process is used only when vapor degreasing, detergent cleaning, and steam cleaning equipment are not available.

e. Ultrasonic Cleaning. Ultrasonic agitation is often combined with solvent or detergent cleaning to improve cleaning efficiency and reduce cleaning time. This method is particularly useful in the cleaning of small articles.

f. Rust and Surface Scale Removal. Any good, commercially available, acid or alkaline rust remover may be used for precleaning. Required equipment and procedures are as specified in the manufacturer's directions.

Downloaded from http://www.everyspec.com



g. Paint Removal. Dissolving type "hot tank" paint strippers and bond release or solvent based paint strippers may be used to remove paint in precleaning. Required equipment and procedures are as specified in the manufacturer's directions.

h. Etching. Articles that have been ground or machined often require etching to prepare them for liquid penetrant testing. This process uses an acid or an alkaline solution to open up grinding burrs and remove metal from surface discontinuities. If an acid is used for etching, an alkaline solution is used as a neutralizing agent; if an alkali is used for etching, an acid is used as a neutralizing agent. The etching and neutralizing processes use either tanks and immersion or wipe-on and wipe-off equipment and materials.

Blast (shot, sand, grit, or pressure), liquid honing, emery cloth, wire brushes, and metal scrapers should not be employed with liquid penetrant testing. These processes tend to close discontinuities by peening or cold working the surface. On occasion a wire brush may be helpful in removing rust, surface scale, or paint but it is used only when no other means of removal will suffice.

### 3.4.2 QUALITY CONTROL METHODS

Various techniques have been developed to measure various properties of penetrants: water tolerance, viscosity, interfacial energy (wetting, surface tension, or contact angle), specific gravity, flashpoint, volatility, temperature stability, chemical inertness (sulphur content, chlorine content, water content, etc.), dye content, solution stability, water washability, emulsifiability, fluorescent brightness, dwell time, and many other properties that may be important. These various tests are not always necessary. Many are used only as a quality control, having no immediate bearing on the actual process of the test, i.e., the variances measured are not usually large enough to actually affect the results. Many of these tests are covered by military specifications, such as flashpoint, water washability, penetrant removability, fluorescent brightness, viscosity, and other tests, as included in MIL-I-25135.

Some of these tests on penetrants are also applicable to emulsifiers, cleaners, and developers. With these other fluids, additional tests may be required such as precipitation rates, dispersability, sedimentation rates, etc. Although the details on these tests are not given here, it is important to know that such tests exist. If problems then occur with a particular liquid penetrant system, the implementation of some of these tests might be considered as controls for these specific problems.

Downloaded from http://www.everyspec.com



### 3.4.3 WETTABILITY TEST

For noncritical applications, the following empirical test may be used to determine if proper wetting of the surface is achievable by the penetrant. Allow a streak of the penetrant to drain across a clean surface of the material to be tested, oriented at an angle of 45 degrees from the vertical. The penetrant should remain in an unbroken film for at least five minutes and should not draw together to form droplets, separate streaks, or runs. This test provides a general appraisal of the wettability of that material surface.

### 3.4.4 SYSTEM QUALIFICATION METHODS

The main objective of a penetrant system is usually the detection of fine surface discontinuities. Here, the penetrant system will refer to a specific combination of a penetrant, emulsifier (if required), and developer for particular flaws on a particular surface. Not only must each material in the system meet individual compatibility requirements, but the system as a whole must be capable of meeting the overall system objective - detection of surface discontinuities.

A penetrant system should be selected first of all to meet the sensitivity and reliability requirements of the inspection task. However, economic considerations must also be considered. There are many applications where a high degree of defect sensitivity is not required and a less costly penetrant system will perform satisfactorily. The compatibility of the components of the system enters into the economic picture. Penetrants and emulsifiers should be chosen which have high mutual compatibility. The Department of Defense issues a Qualified Products List which lists systems of penetrant materials which have been qualified in accordance with MIL-I-25135. These systems are compatible. A current Qualified Products List should be used in selecting penetrant groups.

Because of the importance of the overall performance of penetrant systems, various test methods have been devised for the evaluation of overall system performance.

a. Cracked Aluminum Block Test. One of the most widely used tests for the evaluation of penetrant system efficiency has been the cracked aluminum block test. (Contact Air Force Materials Laboratory, Wright-Patterson AFB regarding reference samples.) Aluminum panels are prepared by cutting 3- by 2-inch panels from 5/16- to 3/8-inch-thick aluminum alloy conforming to QQ-A-355 in the T3 condition or 2024-T3. The 3-inch dimension should be parallel with the milling direction of the sheet. The panels are heated nonuniformly and water quenched to produce thermal cracks by supporting the panel in a frame and impinging the flame of a gas burner or torch without movement on the center, lower side of the panel. A 950 to 980°F Tempilstik or Tempilac, or equivalent, should be applied to an

Downloaded from http://www.everyspec.com



area the size of a penny on the top side and in the center of the panel. The flame should be adjusted so that the Tempilstik or Tempilac melts in approximately four minutes. The panel is then immediately quenched in cold water. This operation should then be repeated on the opposite side of the panel. Following this initial preparation, a groove approximately 1/16-inch square should be cut in the 2-inch direction across the center of the heat-affected zone on both sides of the panel. This panel forms two similar specimens with a groove to help prevent cross-contamination. Before use, the panel should be vigorously cleaned with a bristle brush and liquid solvent followed by vapor degreasing. There should be no evidence of any contamination following this operation.

The test penetrant system is applied in accordance with the manufacturer's instructions to the surface bounded by the panel edges and the 1/16-inch groove. The reference penetrant system is applied to the remaining half of the panel. The acceptability of the test penetrant system is ascertained by comparison with the reference system indications on at least three different panels.

The cracked aluminum test blocks provide only a comparative basis for penetrant system evaluation and do not lend themselves to absolute evaluation of penetrant system capabilities. These panels, when first cracked, are satisfactory for evaluating fluorescent penetrants only. The cracks are too fine for visible penetrant evaluation. After use for evaluating fluorescent penetrants, the cracked blocks can be recracked as described at 800°F. These recracked panels provide a better pattern for evaluating visible penetrants.

b. Chrome Nickel Test Panels. A controlled thickness of chromium is plated on a nickel test panel and the panel is cracked using controlled procedures. The use of the chrome-nickel test panel has permitted a more quantitative evaluation of the capabilities of individual penetrant systems. (Procedures for preparing and using these specimens are involved and contact with Air Force Materials Laboratory, Wright-Patterson AFB, is suggested if additional information is desired.) The test panels are processed using the penetrant system according to manufacturer's specifications. They may, or may not, be cut and used as a comparison standard. The number of cracks per linear inch and the depth of crack may be controlled. Penetrant detection efficiency can be determined by comparing the number of cracks revealed by the penetrant system to the actual number of cracks present. This provides a quantitative basis of comparison.

Downloaded from http://www.everyspec.com



c. Ceramic Block Test. In addition to detection of cracks, penetrant techniques are frequently employed for the detection of surface pores. Porous ceramic blocks are available commerically and can be used to compare pore penetrant sensitivity. The procedure used is as follows:

Equipment:

Disk - Shannon Block No. 2

Applicator Rod - 1/8-inch diameter drawn to a 1/32-inch bead

Cover Glass - 1.5-inch by 1.5-inch by 1/8-inch glass plate

Cleaning Tissue - commercial.

To test penetrant systems, which include an emulsifier, mark each half of the ceramic block for identification. Transfer a small droplet of penetrant with the 1/32-inch end of the applicator rod to a pencil marked point at 1/4 of the disk diameter. Immediately cover the point with a tissue and place the glass plate over the tissue. At the end of 15 minutes, the glass plate and tissue should be removed, and two large drops of the applicable emulsifier should be applied with the 1/8-inch end of the applicator rod and allowed to act for 30 seconds. With the panel at a 45-degree angle and a nozzle 12 inches away, a tap-water spray should be applied for 90 seconds at 5 psi. Following this rinse, the specimens should be dried for five minutes at 225 $\pm 5^{o}$F and observed under white or black light as applicable. Penetrant systems without an emulsifier should be tested as above but without the application of the emulsifier. A comparison should be made between the reference system and the penetrant system being tested to determine pore detection efficiency.

The ceramic blocks may be cleaned for reuse by placing them on edge for several hours in methanol. They should be removed from the methanol with forceps, drained, and dried with an absorbent tissue. They should be inspected under visible and black light for contamination. If free from contamination they should be dried five minutes at 225$^{o}$F. The disk may be stored wrapped in tissue in a closed jar between uses.

The ceramic block test standard is not recommended as a replacement for the chrome-nickel test standard as it does not show as good a discrimination between penetrant group sensitivities. It is satisfactory for quality assurance testing of production systems by comparing new production materials to retained samples of earlier production runs.

Downloaded from http://www.everyspec.com



d. Two-Fold Congruency Test. Although many penetrant systems may fall under the same general classification according to MIL-I-25135, each penetrant system has properties and capabilities which are unique. Therefore, in choosing the best penetrant for a given application, one must go beyond the choice of a particular group designation. One should choose the best constituent of that group for the application anticipated. One means of determining the relative capabilities of two or more penetrant systems is through the use of the two-fold congruency test. This test permits a penetrant user to determine the sensitivity and the repeatability of an individual penetrant system. This test should be required, when a penetrant system is changed, to assure that the new penetrant inspection is equal to or better than that previously used.

The two-fold congruency test is a statistical method for assessing the sensitivity and repeatability of various penetrant systems. To perform this test, five or more parts, each containing ten or more defects, are required. These parts are processed seven times, four in the standard or presently used penetrant, and three times in the unknown or new penetrant. The standard and new systems are used alternately seven times, beginning and ending with the standard system. Each penetrant system should be used according to the manufacturer's recommendations. After each run, the parts are thoroughly inspected and each flaw indication is carefully noted. It is important that each and every indication, whether meaningful or not, be noted in each inspection. Following the recording of the inspection results, the parts should be cleaned by vapor degreasing, and a one-hour acetone soak prior to the next test. To assure that the previous penetrant has been completely removed, developer should be reapplied following the cleaning procedure. If any residual fluorescence is noted, the cleaning procedure should be repeated. When running the two-fold congruency test, it is imperative that production parts be used and that a separate evaluation be made for each application. Penetrants should be chosen individually for each application according to their individual sensitivity and applicability.

The procedure described above provides seven sets of experimental data of the response of penetrants to the defects present in the group of parts tested. The following analysis should be applied to these data.

The number of reproducible indications, x, between any two test runs of the same penetrant on the specimens are counted. There are three two-fold combinations of the three trials on the new penetrant. The mean ($\overline{X}$) of reproducible indications between trials 1 and 2, 1 and 3, and 2 and 3 is given by

$$\overline{X} = \frac{\Sigma X_i}{n} \qquad (1)$$

where n = the number of two-fold combinations.

Downloaded from http://www.everyspec.com



For the information given in Figure 3.4(1), the mean would be

$$\bar{X} = \frac{9 + 9 + 10}{3} = 9.33 \text{ indications.} \qquad (2)$$

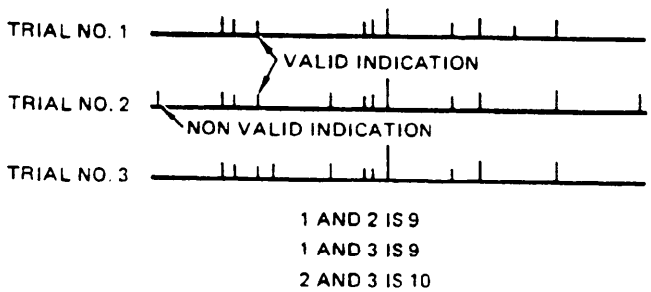


Figure 3.4(1). Number of two-fold congruencies between trials.

To continue the calculations, the total number of reproducible indications from the whole set is required. Assume the results obtained on a set of six test blades were as follows:

| Specimen | 1 | 2 | 3 | 4 | 5 | 6 | Total |
|---|---|---|---|---|---|---|---|
| Trial 1 & 2 | 9 | 15 | 9 | 12 | 15 | 20 | 80 |
| Trial 2 & 3 | 10 | 13 | 8 | 11 | 13 | 18 | 73 |
| Trial 1 & 3 | 9 | 13 | 8 | 12 | 14 | 19 | 75 |

$$\text{The mean } (\bar{X}) = \frac{\Sigma X_i}{n} = \frac{80 + 73 + 75}{3} = 76.0. \qquad (3)$$

The total spread or distribution of the reproducible indications from (X) can be obtained by:

$$\text{Spread} = t_a S_{\bar{x}} = \frac{t_a S}{\sqrt{n}} = t_a \left[\frac{\Sigma_{i=1}^{n} (\bar{X} - X_i)^2}{n - 1}\right]^{1/2} \frac{1}{\sqrt{n}}, \qquad (4)$$

Downloaded from http://www.everyspec.com



where

$t_a$ = confidence coefficient
$S$ = standard deviation of the trial reproducible indication
$S_{\bar{X}}$ = standard deviation of the test part average total indications
$n$ = number of congruent comparisons.

A value of the confidence coefficient, $t_a$, can be obtained from tables of "t" distributions. For a sample size of three and a confidence factor $\alpha$ of 95 percent, the t value would be 2.48. Thus the average number of reproducible indications and the distribution at a 95 percent confidence level for the test penetrant is:

$$76 \pm 2.48 \left[\frac{(76 - 80)^2 + (76 - 73)^2 + (76 - 75)^2}{3-1}\right]^{1/2} \frac{1}{\sqrt{3}} \qquad (5)$$

or $76 \pm 5$

The scatter or the measure of precision of the inspection can be calculated by:

$$\text{scatter} = \frac{t_a S}{\bar{X}} = \frac{2.48 \times 3.6}{76} \text{ or } 11.8 \text{ percent.} \qquad (6)$$

If the scatter for a given test exceeds 15 percent, another trial should be processed.

After these data are generated, the relative sensitivity of the measure of the test penetrant's efficiency when compared against the standard penetrant is:

$$\text{Sensitivity} = \frac{\bar{X}\ (\text{Test Penetrant})}{\bar{X}\ (\text{Std. Penetrant})} \pm \frac{t_a\ S\ (\text{Test})}{\bar{X}\ (\text{Std.})}. \qquad (7)$$

Thus, by use of the two-fold congruency test, the relative merit of a new penetrant system can be compared to the penetrant presently used.

### 3.4.5 TECHNIQUES TO AID PENETRATION

In general, the use of special penetration aids do little to increase the sensitivity of penetrant inspections, although sometimes they do result in a more rapid inspection. Only in very special conditions do they advantageously affect penetrant sensitivity. It should be noted that there is no substitute for a good penetrant system. These aids are incapable of making a good penetrant system of a poor one. System qualification should be based on the actual system used, including any aids.

Downloaded from http://www.everyspec.com



a. Heating. Heating of both the penetrant and of the part have been tried as a means of increased penetrant sensitivity and economy. Heating of the penetrant, however, is normally not recommended as heating will tend to drive off the more volatile constituents of the penetrant, leaving behind an unbalanced mixture. Heating of the part may be beneficial as it will drive off any volatile materials, including water, that may be left in the discontinuities. However, if proper cleaning procedures were used during precleaning operations, this should not be a problem. A second advantage of heating the part is that such operations may open up fine defects, and thereby increase the sensitivity of the inspection. If parts are continually dipped hot, a cooling system should be provided to prevent heating of the penetrant. In any case, parts subject to penetrant inspection should not be processed at temperatures exceeding 100°F.

b. Pressure. For standard penetrant inspection, the use of pressure provides no advantage. Forces provided by capillary action far exceed any force developed by application of pressure.

c. Vacuum. More practical and useful than application of the penetrant under pressure is the use of a vacuum. However, in most cases, the improvement in penetrant sensitivity achieved when using vacuum techniques is not commensurate with the increased cost except in the case of very small parts. Vacuum techniques are not normally practiced unless a substantial advantage can be demonstrated.

d. Vibration. Vibration is probably the most useful of all penetration aids. Vibration can hasten penetration through mechanical working of the sides of a defect. Vibration techniques may also loosen contaminates that have become lodged in cracks. These techniques can be used to a considerable advantage in some instances.

e. Bending. Another penetration aid is bending the part to open tight defects. It is recommended that aircraft be jacked before penetrant inspection of the under surface of the wing to remove compressions that may make cracks impenetrable. Some care should be exercised in using bending techniques to aid penetrant inspection. If such techniques are used too frequently, or if bending loads are too great, this may cause fatigue and subsequent growth of small flaws. Properly applied, bending techniques can provide a significant increase in sensitivity with a given penetrant system.

Downloaded from http://www.everyspec.com



THIS PAGE INTENTIONALLY LEFT BLANK

Downloaded from http://www.everyspec.com



## 3.5 STANDARDS

Standards, such as those described in 3.4.4, using cracked aluminum test blocks or other specially prepared blocks, are often necessary for critical evaluations or controls. Actual test parts, that represent a spectrum of the variables to be tested, should also be obtained and used as standards. The use of these standards are vital for process control checks to verify adequacy of dwell times, viewing lights and other controls.

Many commercial liquid penetrant standards with controlled crack sizes are now available. The use of these commercial standards does not remove the need for the standards made from actual production parts if available, that is, test parts with natural defects.

WARNING: All standards ahall be marked so that it is difficult to "lose" them in the production line. Simulated defects such as tight fitting plugs or frozen and impact induced cracks can also be used.

The National Bureau of Standards issues penetrant test blocks that differ from those described previously in that they contain uniform cracks of known and certified widths. These blocks are especially useful for checking the sensitivities of batches of dye penetrant materials and for verifying the performance of penetrant inspection systems. The test blocks may be purchased from the Office of Standard Reference Materials, U.S. Department of Commerce, National Bureau of Standards, Gaithersburg, Maryland 20899

Reference photographs are important if a long-term program is involved, or if a large number or inexperienced inspectors must be used. Reference photographs must be carefully prepared to ensure an adequate one-to-one correlation to that being inspected. The color, size, and orientations must all be considered. Distance scales placed on both top and bottom or both sides of each photographed image should be used to establish the true perspective exhibited by the photograph. Reference photographs should show both acceptable and non-acceptable conditions. In addition, reference photographs showing actual limits -- indications this small or smaller are acceptable, and indications this large or larger are rejectable -- are of great value. Commercial standard reference photographs can be obtained for a small fee from the American Society for Testing and Materials (ASTM), 1916 Race St., Philadelphia, PA 19103. See ASTM E 433 for details.

Downloaded from http://www.everyspec.com



THIS PAGE INTENTIONALLY LEFT BLANK

Downloaded from http://www.everyspec.com



APPLICATIONS

For almost all materials where surface flaws are openings in the surface, such as cracks, liquid penetrant will be useful. The main limitations are absorptive or porous surfaces, rough surfaces, or chemical incompatibility. Liquid penetrants are used extensively for both ferrous and non-ferrous materials, for production and service inspections, and for both large and small specimens.

Magnetic particle testing has some advantages over liquid penetrant testing for ferromagnetic materials. One main advantage is that magnetic particle testing can find near subsurface flaws. Therefore, with all other factors being equal, magnetic particle testing of ferromagnetic materials is normally preferred to liquid penetrant testing.

One of the advantages of liquid penetrant testing is the ability to perform this testing with the minimum of facility support. Often for visible dye penetrants, no electrical power, equipment, or tools (other than buckets and rags) are necessary. For this reason alone, liquid penetrant testing finds applications where no other methods can even be considered.

Downloaded from http://www.everyspec.com



THIS PAGE INTENTIONALLY LEFT BLANK

Downloaded from http://www.everyspec.com



## 3.7 SPECIFIC GUIDELINES

Guidelines for liquid penetrant testing are relatively simple. Sometimes, however, the easiest and simplest procedures cause the greatest problems because they receive inadequate attention.

### 3.7.1 GUIDELINES FOR DESIGNERS

The designer's greatest responsibility and concerns relating to penetrant testing are knowing the chemical compatibilities that must be maintained. He is the one who knows the materials being used. If sulfur, or chlorine, or some other element often found in penetrant material will produce undesirable long-term (or short-term) effects, he must provide the warning, in the form of instructions or guides, to all those who may be handling those materials.

### 3.7.2 GUIDELINES FOR PRODUCTION ENGINEERS

Production Engineers rely heavily upon penetrant testing both as a receiving inspection method and during production. Penetrant testing is often used in welding inspection. There is sometimes a tendency to automatically use this inspection even when not required. Sometimes defects are directly visible, requiring no penetrant inspection at all, but penetrant inspection is automatically called for as a fixed routine.

One undesirable condition faced by production is where more than one liquid penetrant test might be required on the same part. When this is required, the importance of the cleaning steps becomes critical.

Certain precautions should be observed when reprocessing is required. NO ITEM WHICH HAS BEEN INSPECTED BY VISIBLE-DYE PENETRANT SHALL BE REPROCESSED AT ANY TIME, NOR SHALL ANY ITEM WHICH WILL REQUIRE REINSPECTION BE INSPECTED BY THE VISIBLE-DYE METHOD. Visible-dye penetrants are very difficult to remove from discontinuities since they dry in discontinuities preventing the entrance of subsequently applied penetrants.

Regardless of the penetrant used, certain precautions should be followed when reprocessing is necessary. If it is known that future reinspection of a part will be necessary, postcleaning is a necessity to remove residual penetrant from flaw entrapments. Fairly satisfactory results can be achieved by subjecting such parts to a thorough cleaning by vapor degreasing. Heating the part to 325°F, if possible (this temperature may damage some parts), is helpful in driving out residual penetrants. Regardless of the care exercised, second inspections rarely have the sensitivity of the initial penetrant test.

Downloaded from http://www.everyspec.com



### 3.7.3 GUIDELINES FOR QA

One of the difficulties with liquid penetrant testing is that it is largely a manual process. Variances due to man's direct involvement will always be a proper concern by Quality Assurance (QA) personnel. There are a multitude of fairly standardized tests to allow good quality control of the properties of the penetrant and other materials used, but a standardization of the responses of individual inspectors is more difficult to achieve.

### 3.7.4 GUIDELINES FOR NDT ENGINEERS

The NDT engineer must exercise a great deal of technical knowledge and understanding of liquid penetrant testing, but his most important concern will be his inspectors.

The inspectors must be conscientious, they should have good eyesight, and they must not be color blind. The inspectors must be familiar with the part which they are inspecting and be advised as to what constitutes a rejectable or acceptable discontinuity. They should be made aware of the types of discontinuities that are likely to occur.

A good inspection environment must be provided, and proper work habits should be maintained. For visible-dye penetrants, a bright white light should be provided. For fluorescent penetrants, a suitable inspection station must provide several features. First, the inspection area should be capable of being sufficiently darkened before inspection is carried out. A low level of white light intensity (less than two footcandles) is as important as providing a high level of black light intensity. A high level of black light intensity is of little value if adequate light exclusion is not possible. A black light should be provided which is capable of providing at the inspection surface at least 800 microwatts/$cm^2$ (1000 microwatts/$cm^2$ or 125 footcandles are often specified minimums).

Because of eye fatigue, an inspector cannot give consistently good inspection results over long periods of time. Inspectors should be relieved no less than every two hours. Every effort should be made to limit fatigue of the inspector.

This should include good ventilation or perhaps air conditioning as comfort is an important factor in determining endurance and helps ensure maximum alertness at all times. Eye fatigue can be minimized by placing black lights such that no reflection reaches the inspector's eyes. The use of yellow glasses may also be helpful. Such glasses block most of the black light and visible light in the violet region which cause eye strain while passing the yellow-green light of fluorescent indications. Use of these glasses is highly recommended, though not required. Glasses that darken when exposed to light should never be used when inspection is in progress.

The NDT engineer must constantly check to see that the inspectors are provided every consideration reasonably possible to aid them in their work.

Downloaded from http://www.everyspec.com



### 3.7.5 GUIDELINES FOR NDT TECHNICIANS

Attention to details is very desirable for liquid penetrant testing. Adequate dwell times, proper cleaning, and proper drying are mainly dependent upon consistency and close observation of details. Forgetting to note the exact time that an operation begins or not checking the temperatures or air flows can result in variables that will normally not be explainable later. Such omissions will not provide reliable results. The use of standards processed with each batch is usually wise and provides some confidence that no major detail was overlooked.

Downloaded from http://www.everyspec.com



THIS PAGE INTENTIONALLY LEFT BLANK

Downloaded from http://www.everyspec.com



## 3.8 SAFETY

By federal requirement, penetrant materials shall contain no compounds whose degree of hazard has not been appraised by a recognized occupational health organization; for example, the U.S. Public Health Service, The American Conference of Government Hygienists, or The American Industrial Hygiene Association. Neither may any combination of materials be present which might be hazardous to health when used in accordance with the manufacturer's recommendations. The odor shall not be nauseating upon limited exposure to the vapor. Manufacturers are required to furnish a certified statement specifically identifying each ingredient in the compound by a recognizable chemical or proprietary name and source. If data submitted are not adequate to early establish the potential toxicity and safety of the material for the proper use, required additional information shall be supplied by the supplier.

When used on government contracts, the government may run such tests on penetrant materials as are deemed necessary, either on test samples or procured material, to verify composition. Penetrant materials listed on the Qualified Products List have been evaluated for toxicity by the Air Force Occupational and Environmental Health Laboratory at Brooks AFB, Texas.

Even with all the above precautions, the tolerance level for each individual varies widely. Therefore, every precaution should be exercised to limit the exposure to these chemicals. The use of dust masks, goggles, face shields, water proof aprons and/or other clothing is strongly encouraged. Many times hand creams and/or rubber gloves are found to be useful, especially where hand washing or rinsing causes the skin to become dry.

The burning and explosive capabilities of these liquids and/or their vapors must be considered and specifically guarded against constantly. High temperatures around heating elements and lights, as well as sparks from pump motors and blowers, are all possible sources of ignition.

There is often a problem of cleanliness with liquid penetrants. It does not take much spillage or splashing of strong, bright dyes, or the collection of wipes or rags to quickly make an area look unpleasant and unkempt. Such an appearance often leads to carelessness and unsafe attitudes. Many times the difficulty of cleanup affects the decision on the system chosen for testing. A continuous effort must usually be made to keep the penetrant testing area clean and safe.

When fluorescent penetrants are used, several safety items must be considered. Filters used on black lights not only remove undesirable visible light, but some of the more dangerous ultraviolet light. Therefore, checks should always be made to ensure filters are being used and that there are no cracks or other defects that would allow transmission of any unsafe radiation. Fluorescent inspection must be done in the dark, and thus when a person goes from a normally lighted area to a dark area or returns into the lighted area, a safety hazard exists until the eyes become fully adjusted to the change. WARNING: Phosphors in open wounds prevent complete healing.

Downloaded from http://www.everyspec.com



THIS PAGE INTENTIONALLY LEFT BLANK

Downloaded from http://www.everyspec.com



## 3.9 GLOSSARY

Reference ASTM E-270 "Standard Definitions of Terms Relating to Liquid Penetrant Inspection".

Downloaded from http://www.everyspec.com



THIS PAGE INTENTIONALLY LEFT BLANK

Downloaded from http://www.everyspec.com



## 3.10 BIBILIOGRAPHY

1. Classroom Training Handbook, CT-6-2, "Nondestructive Testing, Liquid Penetrant," (General Dynamics Convair, San Diego), 1977 (Fourth Edition).

2. AST, E 270 - Standard Definitions of Terms Relating to Liquid Penetrant Inspection.

3. NASA SP-5113, "Nondestructive Testing, A Survey," (U. S. Government Printing Office, Washington, D.C.), 1973.

4. Metals Handbook, Vol. 11, "Nondestructive Inspection and Quality Control," (American Society for Metals, Metals Park, OH), 1976 (8th Edition).

5. W.J. McGonnagle, "Nondestructive Testing," (McGraw-Hill Book Co, N.Y), 1961.

6. R.C. McMaster, "Nondestructive Testing Handbook," (Ronald Press Co., N.Y.), 1959.

7. C.E. Betz, "Principles of Penetrants," (Magnaflux Corp., Chicago), 1969 (Second Edition).

Downloaded from http://www.everyspec.com



THIS PAGE INTENTIONALLY LEFT BLANK

Downloaded from http://www.everyspec.com



# INDEX


| Subject | Section |
|---|---|
| Aids to Penetration | 3.4.5 |
| Aluminum Blocks | 3.4.4 |
| Applications | 3.6 |
| Basic Principles | 3.2 |
| Black Light | 3.3.1 |
| Ceramic Block Tests | 3.4.4 |
| Cleaners | 3.3.4 |
| Cleaning Procedures | 3.4.1 |
| Compatability | 3.3.1 |
| Congruency Tests | 3.4.4 |
| Contact Angles | 3.2.1 |
| Designers | 3.7.1 |
| Developers | 3.3.5 |
| Emulsifiers | 3.3.3 |
| Facilities | 3.3.1 |
| Interfacial Energy | 3.2.1 |
| Kits | 3.3.1 |
| NDT Engineers | 3.7.4 |
| NDT Technicians | 3.7.5 |
| Penetrants | 3.3.2 |
| Production Engineers | 3.7.2 |
| Quality Assurance Personnel | 3.7.3 |
| Quality Control Methods | 3.4.2 |
| Safety | 3.0/3.8 |
| Standards | 3.5 |
| Surface Tension | 3.2.1 |
| Wettability Test | 3.4.3 |

Downloaded from http://www.everyspec.com



Custodians:

Army -- MR
Navy -- AS
Air Force -- 20

Review activities:

Army -- AR
Navy -- OS

Preparing activity:

Army -- MR

Project No. NDTI-0047

(WP ID-1338P/DISC-0032v. FOR AMMRC USE ONLY.)