Downloaded from http://www.everyspec.com

MIL-HDBK-415
1 February 1985

MILITARY HANDBOOK

DESIGN HANDBOOK FOR FIBER OPTIC COMMUNICATIONS SYSTEMS

NO DELIVERABLE DATA
REQUIRED BY THIS DOCUMENT

AREA SLHC/TCTS

Approved for public release; distribution is unlimited.

Downloaded from http://www.everyspec.com

DEPARTMENT OF DEFENSE
Washington, DC 20360

Design Handbook for Fiber Optic Communications Systems

MIL-HDBK-415

1. This Military Handbook is approved for use by all Departments and Agencies of the Department of Defense.

2. Beneficial comments (recommendations, additions, deletions) and any pertinent data which may be of use in improving this document should be addressed to: Commander, U.S. Army Electronic Systems Engineering Installation Activity, ATTN: ASC E-ES, Fort Huachuca, Arizona 85613-5300, by using the self-addressed Standardization Document Improvement Proposal (DD Form 1426) appearing at the end of this document or by letter.

Downloaded from http://www.everyspec.com

FOREWORD

1. This handbook provides engineers and other communications personnel with standard guidelines for use in planning and engineering of fiber optic communications systems.

2. During its preparation, the authors found that the meanings and applications of some terms had not yet become standard throughout the engineering community. The terms used in this handbook have been selected and applied so as to agree with other relevant Government documents, especially FED-STD-1037.

3. A particularly useful reference, although not mentioned in the text, is NBS (National Bureau of Standards) Handbook 140, *Optical Waveguide Communications Glossary*, which can be ordered from the National Technical Information Service, U.S. Department of Commerce, Springfield, Virginia 22161.

ACKNOWLEDGEMENT

The discussion of "receiver figure of merit," which appears on pages 102 and 104, has been adapted from *Optical Fiber Transmission Systems* by Stewart D. Personick. Plenum Publishing Corporation, 233 Spring Street, New York, NY 10013 holds a copyright for this material. Their permission to use it in this handbook is gratefully acknowledged. Any further reproduction or transmission of this material requires permission of the Plenum Publishing Corporation.

Downloaded from http://www.everyspec.com

CONTENTS

Paragraph		Page
	Promulgation sheet	ii
	Foreword	iii
1.	SCOPE	1
1.1	Purpose	1
1.2	Organization	1
1.3	Application	1
1.4	Safety	1
1.4.1	Laser Safety	1
1.4.2	Electric hazards	1
2.	REFERENCED DOCUMENTS	2
2.1	Issues of documents	2
2.2	Other publications	3
3.	DEFINITIONS	4
4.	GENERAL PRINCIPLES	7
4.1	Introduction	7
4.1.1	Fiber optic communications systems	7
4.1.2	Alternatives to fiber optics	7
4.1.2.1	Paired-wire cable	7
4.1.2.2	Coaxial cable	10
4.1.2.3	Microwave radio	10
4.1.2.4	Millimeter-wave radio	10
4.1.3	Long haul fiber optic communications systems	10
4.1.4	Tactical fiber optic communications systems	10
4.1.5	Fixed base communications systems	11
4.1.5.1	Local area networks (LAN's)	11
4.1.5.1.1	Bus topology	11
4.1.5.1.2	Ring topology	13
4.1.5.1.3	Star topology	13
4.1.5.2	Surveillance CCTV	13
4.1.5.3	Radar remoting	13
4.2	Optical fiber composition	13
4.2.1	Optical fibers as waveguides	13
4.2.1.1	Snell's law	13
4.2.1.2	Numerical aperture	17
4.2.2	Distortion	17
4.2.2.1	Distortion *vs.* Dispersion	17
4.2.2.2	Multimode distortion	20
4.2.2.3	Dispersion	20
4.2.2.3.1	Material dispersion	20
4.2.2.3.2	Waveguide dispersion	20
4.2.2.4	Zero dispersion near 1300 nanometers	20

Downloaded from http://www.everyspec.com

CONTENTS (Continued)

Paragraph		Page
4.2.3	Bandwidth-distance factor and rise time	20
4.2.3.1	Optical bandwidth	22
4.2.3.2	Electrical bandwidth	22
4.2.4	Attenuation	22
4.2.4.1	Absorption and scattering	22
4.2.4.2	Microbending and microcracking	22
4.2.4.3	Leaky modes	24
4.3	Types of optical fibers	24
4.3.1	Multimode fibers	24
4.3.1.1	Multimode step-index fiber	24
4.3.1.2	Multimode graded-index fiber	24
4.3.1.3	Comparison of multimode fibers	24
4.3.2	Single-mode fiber	24
4.3.3	Comparison of single-mode and multimode fibers	26
4.4	Fiber optic cable	26
4.4.1	Composition	26
4.4.1.1	Cables with central strength member	26
4.4.1.1.1	Loose buffer tubes around central strength member	27
4.4.1.1.2	Tight buffer tubes around central strength member	27
4.4.1.1.3	Other arrangements with central strength member	27
4.4.1.2	Cables with distributed strength members	27
4.4.1.2.1	Military field tactical cable	27
4.4.1.2.2	Cable without central strength member	27
4.4.1.2.3	Multifiber-ribbon cable	27
4.4.2	Applications	27
4.4.2.1	Cable designed for aerial installation	27
4.4.2.2	Cable designed for duct installation	34
4.4.2.3	Cable designed for direct burial installation	34
4.4.2.4	Cable designed for underwater installation	34
4.4.3	Splice cases	34
4.5	Transmitters	34
4.5.1	LED's	34
4.5.2	LD's	35
4.5.3	Drivers	35
4.6	Receivers	35
4.6.1	PIN photodiodes	35
4.6.2	APD's	40
4.6.3	Noise	40
4.7	Repeaters	40
4.8	Orderwire and telemetry channels	41
4.9	Splices	41
4.9.1	Fiber joining methods	41
4.9.2	Grooved-plate, multifiber splice	41
4.9.3	Multirod alignment splice	41
4.9.4	Fusion splice	41

Downloaded from http://www.everyspec.com

CONTENTS (Continued)

Paragraph		Page
4.9.5	Elastomer splice	41
4.10	Connectors	41
4.10.1	Tubular-channel connector	45
4.10.2	Ferrule connector	45
4.10.3	V-groove connector	45
4.10.4	Three-sphere connector	45
4.10.5	Biconical connector	45
4.10.6	Jeweled-ferrule connector	45
4.10.7	Curved or elbow channel connector	45
4.10.8	Collimating lens connector	45
4.10.9	Crimp connector	54
4.10.10	Double-eccentric connector	54
4.10.11	Single-mode connector	54
4.10.12	Connector-induced losses	54
4.10.12.1	Fresnel loss	54
4.10.12.2	Mechanical losses	54
4.10.12.3	Methods of lessening fiber end loss	54
4.10.12.4	Fiber end preparation	54
4.11	Couplers	54
4.11.1	T couplers	58
4.11.1.1	Beam splitting	58
4.11.1.2	Bifurcation	58
4.11.1.3	Evanescent wave coupling	58
4.11.2	Star couplers	58
4.11.2.1	Transmissive star coupler	58
4.11.2.2	Reflective star coupler	58
4.11.2.3	Splitter combiner	63
4.12	Modulation and coding	63
4.12.1	Digital signals	63
4.12.1.1	Polarity	63
4.12.1.2	Coding	63
4.12.1.2.1	Nonreturn-to-zero (NRZ) bipolar	63
4.12.1.2.2	Return-to-zero (RZ) bipolar	63
4.12.1.2.3	Bipolar alternate mark inverted (AMI)	65
4.12.1.2.4	Biphase level	65
4.12.1.2.5	Conditioned diphase	65
4.12.1.2.5.1	Signal conditioning	65
4.12.1.2.5.2	Diphase modulation	65
4.12.1.3	Optical line coding and transmission rate	65
4.12.1.3.1	Coding	65
4.12.1.3.2	Rate	65
4.12.2	Analog signals	65
4.12.2.1	Continuous analog signals	66
4.12.2.1.1	Amplitude modulation (AM)	66
4.12.2.1.2	Frequency modulation (FM)	66

Downloaded from http://www.everyspec.com

CONTENTS (Continued)

Paragraph		Page
4.12.2.1.3	Phase modulation (PM)	66
4.12.2.2	Pulsed analog signals	66
4.12.2.2.1	Pulse-amplitude modulation (PAM)	66
4.12.2.2.2	Pulse-duration modulation (PDM)	66
4.12.2.2.3	Pulse-position modulation (PPM)	66
4.12.3	Interfaces	66
4.13	Wavelength-division multiplexing (WDM)	66
4.13.1	WDM techniques	67
4.13.2	Multiplexers	67
5.	DETAILED ENGINEERING	71
5.1	Introduction	71
5.2	Fiber optic link design procedure	71
5.2.1	Communications requirements and standards (step 1)	71
5.2.1.1	BER	71
5.2.1.2	Power margin	75
5.2.1.3	Dynamic range	75
5.2.1.4	Jitter	75
5.2.1.5	Rise time and bandwidth	75
5.2.2	Initial component selection (step 2)	76
5.2.3	Detector input power (step 3)	76
5.2.4	Available power budget (step 3)	76
5.2.5	Allocated power budget (step 3)	76
5.2.6	Maximum span length (step 4)	76
5.2.7	Minimum span length (step 4)	77
5.2.8	Transmitter and receiver rise times (step 3)	77
5.2.9	Fiber rise time (step 5)	77
5.2.9.1	Dispersion	77
5.2.9.2	Rise time characteristics of material dispersion (step 5)	77
5.2.9.3	Multimode distortion	79
5.2.10	Span rise time (step 5)	79
5.2.11	Jitter (step 6)	79
5.3	Installation engineering	79
5.3.1	Composition of fiber optic communications systems	79
5.3.2	Inside plant installation	80
5.3.2.1	Terminal equipment bay characteristics	80
5.3.2.2	Terminal location	80
5.3.3	Outside plant installation	80
5.3.3.1	Direct burial installation	82
5.3.3.2	Duct installation	82
5.3.3.3	Aerial installation	82
5.4	System tests	82
5.4.1	Testing rationale	82
5.4.1.1	Installation and acceptance tests	82
5.4.1.2	Diagnostic tests	83

Downloaded from http://www.everyspec.com

CONTENTS (Continued)

Paragraph		Page
5.4.2	Test equipment	83
5.4.3	Test procedures	84
5.4.3.1	Attenuation	84
5.4.3.2	Attenuation test and fault location using an OTDR	84
5.4.3.3	BER, power margin, dynamic range, and receiver sensitivity	87
5.4.3.4	Distortion and jitter	90
5.4.3.5	Optical transmitter rise and fall time	93
5.4.3.6	Optical receiver rise and fall time	93
5.4.3.7	Bandwidth	93

FIGURES

Figure		
1.	Block diagram, fiber optic communications link	9
2.	LAN configurations	12
3.	Basic optical fiber composition	14
4A-C.	Reflection, refraction, and critical angle	15
4D.	Total internal reflection within a fiber	16
5.	Acceptance cone	18
6.	Distortion, broadening, and interference	19
7.	Effect of Δn and $\Delta\lambda$ on pulse broadening	21
8.	Typical spectral loss curve	23
9.	Index profiles and modes of propagation	25
10.	Typical fiber optic cable with central strength member	28
11.	Optical fibers in loose and tight buffer tubes	29
12.	Fiber optic cable slotted core construction	30
13.	Military field tactical cable	31
14.	Distributed strength member fiber optic cable	32
15.	Multifiber-ribbon cable	33
16.	Block diagram of fiber optic transmitter	36
17.	Typical optical power *vs.* drive current — LED and LD	37
18.	Spectral linewidths of LED and LD	38
19.	Block diagram of fiber optic receiver	39
20.	Grooved-plate multifiber splice	42
21.	Multirod alignment splice	43
22.	Elastomer splice	44
23.	Tubular-channel connector	46
24.	Ferrule connector	47
25.	V-groove connector	48
26.	Three-sphere connector	49

Downloaded from http://www.everyspec.com

FIGURES (Continued)

Figure		Page
27.	Biconical connector	50
28.	Jeweled-ferrule connector	51
29.	Elbow-channel connector	52
30.	Collimating lens connector	53
31.	Crimp connector	55
32.	Double-eccentric connector	56
33.	Mechanical losses in fiber optic connectors	57
34A.	T coupler (beam splitter)	59
34B.	T coupler (bifurcated cable)	60
34C.	T coupler (evanescent wave coupler)	61
35.	Star couplers	62
36.	Digital coding	64
37.	Pulsed analog modulation	68
38.	Simplex WDM	69
39.	Duplex WDM	70
40A.	Flow diagram legend	72
40B.	Digital link analysis procedure flow diagram	73
41.	Analog link analysis procedure flow diagram	74
42.	Typical material dispersion for fibers	78
43.	An example of fiber optic terminal equipment bay	81
44.	Test configuration for attenuation	85
45.	OTDR block diagram	86
46.	OTDR trace showing attenuation, connector locations, and fiber end	88
47.	Test configuration for BER, power margin, dynamic range, and receiver sensitivity	89
48.	Test configuration for distortion and jitter	91
49.	Eye pattern	92
50.	Jitter	94
51.	Test configuration for transmitter rise and fall time	95
52.	Test configuration for receiver rise and fall time	96
53.	Test configuration for bandwidth	97

TABLES

TABLE		
I	Applications of fiber optic communications	8
II	Characteristics of alternate transmission media	11
III	Comparison of typical LED's and LD's	35
IV	Comparison of typical PIN photodiodes and APD's	40

Downloaded from http://www.everyspec.com

TABLES (Continued)

TABLE		Page
V	Allowable rise times for most-used modulation and signal formats	75
VI	Broad component selection criteria	76
VII	Typical spectral linewidths of optical sources	77
VIII	Test equipment for fiber optic system tests	83

APPENDICES

APPENDIX		
A	Calculation of required detector input power for digital links	99
B	Calculation of required detector input power for analog links	109
C	Link design computer program listing	114
D	Fiber optic link design worksheets and examples	131
E	Acronyms, abbreviations, and symbols	146

Downloaded from http://www.everyspec.com

1. SCOPE

1.1 **Purpose.** This handbook provides uniform guidelines for communications engineers, and installation, operation, and maintenance personnel who work with new fiber optic communications systems.

1.2 **Organization.** A discussion of system criteria establishes advantages and disadvantages of fiber optic systems, and whether fiber optics is appropriate to a specific communications task. After establishing system requirements, fiber optic components and their use to accomplish system criteria are discussed. Installation, testing, and maintenance are treated in later paragraphs.

1.3 **Application.** This handbook is to be used to support the requirements stated in MIL-STD-188-111.

1.4 **Safety.**

1.4.1 **Laser safety.** Lasers must comply with the requirements of MIL-STD-1425 and ANSI Z136.1-1980. DoDI 6050.6 and MIL-STD-1425 specify requirements for military-exempt lasers, such as those used in combat or combat training, or those classified in the interest of national security. Lasers used for other purposes, such as general communications, must comply with 47 CFR (Code of Federal Regulations), Chapter 1, subchapter J.

1.4.2 **Electric hazards.** Power supplies and other electronics used in fiber optic communications systems shall comply with requirements 1 and 8 of MIL-STD-454 and other applicable safety requirements of MIL-STD-454. Users should be aware that, although optical fibers themselves are not electrical conductors, fiber optic cables often include metallic strength members capable of conducting electric current.

Downloaded from http://www.everyspec.com

2. REFERENCED DOCUMENTS

2.1 **Issues of documents.** The following documents of the issue in effect on date of invitation for bids or request for proposal form a part of this handbook to the extent specified herein.

STANDARDS

Federal

FED-STD-1037	Glossary of Telecommunication Terms

Military

MIL-STD-188-100	Common Long Haul and Tactical Communication System Technical Standards
MIL-STD-188-111	Subsystem Design and Engineering Standards for Common Long Haul Tactical Fiber Optics Communications
MIL-STD-188-114	Electrical Characteristics of Digital Interface Circuits
MIL-STD-188-124	Grounding, Bonding, and Shielding
MIL-STD-188-200	System Design and Engineering Standards for Tactical Communications
MIL-STD-454	Standard General Requirements for Electrical Equipment
MIL-STD-1425	Safety Design Requirements for Military Lasers and Associated Support Equipment

HANDBOOKS

MIL-HDBK-419 (volumes 1 and 2)	Grounding, Bonding, and Shielding for Electronic Equipment and Facilities

PUBLICATIONS

Department of Defense

DoD Instruction 6050.6	Exemption for Military Laser Products

Department of Air Force

T.O. 31W3-10-12/FM 11-372-2	Outside Plant Cable Placement

Downloaded from http://www.everyspec.com

T.O. 31-10-34/FM 11-487-5	Standard Installation Practices, Fiber Optic Cables and Connectors
TR 82-06-EZ	Final Technical Report for Base Transmission Path Trade-Off Analysis

(Copies of specifications, standards, drawings, and publications required by contractors in connection with specific procurement functions should be obtained from the procuring activity or as directed by the contracting officer.)

2.2 **Other publications.** The following documents form a part of this handbook to the extent specified herein. Unless otherwise indicated, the issue in effect on the date of invitation for bids or request for proposal shall apply.

Marcuse, Dietrich, Principles of Optical Fiber Measurement, Academic Press, 1981.

(Requests for copies should be addressed to Academic Press, Inc., 111 Fifth Avenue, New York, NY 10003.)

Personick, Stuart D., Optical Fiber Transmission Systems, Plenum Press, 1981.

(Requests for copies should be addressed to Plenum Publishing Corp., 227 W. 17th Street, New York, NY 10011.)

ANSI Z136.1-1980: American National Standard for the Safe Use of Lasers.

(Requests for copies should be addressed to the American National Standards Institute, 1430 Broadway, New York, NY 10018.)

Downloaded from http://www.everyspec.com

3. DEFINITIONS

Terms used in this handbook shall be as defined in FED-STD-1037. Other terms are defined as follows. Abbreviations and acronyms used herein are listed in Appendix E.

Alignment tube. Tube into which fiber ends are introduced, providing alignment prior to sealing the fiber ends in place to form a splice.

Angular misalignment. Angular departure of one fiber from the axis defined by the other when two fibers are connected or spliced.

APD. See avalanche photodiode.

APD noise factor. A dimensionless quantity which is a measure of the degradation of SNR produced by an APD. APD noise factor increases with avalanching gain and there is a point where further increases in gain do not produce increases in output SNR.

Avalanche photodiode (APD). A photodetector used in high speed (broad bandwidth) lightwave systems. The avalanche feature results from the rush of electrons across a junction under a very high reverse bias. The APD requires a much higher reverse bias and has a much higher cutoff frequency than a PIN photodiode, and therefore at high frequencies it is more sensitive. See the definition of "avalanching" in FED-STD-1037.

Bipolar signal. A signal having two polarities, both of which are not zero. Usually, bipolar signals are symmetrical with respect to zero amplitude; e.g., +1, −1.

Driver. Circuit providing energy to the light source and the modulator circuit. It is designed to modulate the light source with the desired signal, maintain light efficiency by controlling bias current, and protect the light source by limiting the bias current and, in some cases, controlling the temperature of the light source.

Elastomer. A family of plastics often used in connectors. A molded plastic component of a splice or connector that deforms slightly under pressure from the inserted fibers resulting in alignment of the fiber ends.

Grinding-and-polishing. A small-scale adaptation of the lens-maker's technique of shaping a piece of glass by rubbing it against another object with the intervention of various sizes of abrasive grains mixed with a liquid.

High order mode. A propagation path that makes a relatively large angle with respect to the fiber axis.

Intensity modulation. By controlling current to the light source, the intensity of the light is made to vary over a continuous range more or less in proportion to the applied signal.

Low order mode. A propagation path that makes a relatively small angle with respect to the fiber axis.

Negative lens. A lens thinnest at the center, which causes light rays to diverge.

Downloaded from http://www.everyspec.com

Optical attenuator. Absorbing or partially-reflecting component placed in the optical beam to reduce the energy delivered to an optical detector.

Optical carrier. The unmodulated component of light emitted by an optical source, suitable for modulation.

Optical contact. An exact term in optics, signifying the approach of two transparent, index-matched bodies so closely (a small fraction of a wavelength) that the discontinuity no longer produces a reflection. Typically, the surfaces of the two bodies must be polished to match each other's form before optical contacting can occur.

Photodiode. A semiconductor device which is used in lightwave systems to convert light energy to electrical energy.

Photon. The photon is the quantum (an indivisible energy unit) of the electromagnetic field. It has no electric charge, no rest mass, no magnetic field, and a long lifetime. In a vacuum, it travels at the speed of light.

Pigtail. A short length of optical fiber permanently attached to an optical emitter, photodetector, or connector. It is used to couple power between the opto-electronic component and the transmission fiber.

PIN photodiode. Positive-intrinsic-negative photodiode. In this light-sensitive semiconductor diode, the P-doped and N-doped regions are separated by an undoped "intrinsic" region. PIN photodiodes have the advantage of broad spectral response, wide dynamic range, high speed and low noise, but no internal gain.

Positive lens. A lens thickest at the center, which causes light rays to converge.

Power budget. A calculation of how much light energy must be provided by the transmitter to overcome various system losses and still satisfy the energy input requirements of the receiver.

Power margin. The difference between available power and power budget.

Receiver figure of merit (Z). The ratio of rms output noise to the response produced by a single hole-electron pair. This dimensionless quantity is useful because it effectively combines a number of component variables.

Scribe-and-cleave. A technique to prepare fibers for termination in which fibers are lightly scribed, then pulled apart to produce cleavage perpendicular to the fiber axis.

3-dB optical bandwidth. Bandwidth between optical half-power points.

Downloaded from http://www.everyspec.com

THIS PAGE INTENTIONALLY LEFT BLANK.

Downloaded from http://www.everyspec.com

4. GENERAL PRINCIPLES

4.1 **Introduction.** The idea of transmitting information using light dates back to Alexander Graham Bell's photophone in the 1880's, a device in which a voice signal mechanically modulated a light beam and a selenium detector interpreted the interrupted beam. However, it was not until the late 1970's that optical fibers for communications waveguides became practical through the development of low-loss fibers, and inexpensive and reliable light sources and detectors. Advantages of fiber optic systems are given in table I. Fiber optic communications technology is basically the synthesis of two separate ideas — communication using light and use of glass as a light waveguide. Fiber optic cable offers the advantages of large bandwidth, low attenuation, small size and weight, no spark hazards, galvanic isolation, and elimination of electromagnetic interference (EMI). However, the associated electrical hardware is susceptible to EMI/RFI/EMP, must be designed to meet security requirements, and can pose shock and spark hazards.

4.1.1 **Fiber optic communications systems.** Optical fibers are transmission media for signals at optical wavelengths. The transmitter converts electrical signals to optical signals for transmission through the fibers; then the receiver converts the optical signals back to electrical signals. Information can be transmitted as discrete pulses for digital transmission, or with variable intensity for analog transmission. Any application of a fiber optic communications link has the same fundamental configuration, as shown in figure 1. This document is concerned with long-haul, tactical, and fixed base communications applications. Fiber optic links provide information bandwidths of hundreds (ultimately thousands) of megahertz and can span tens of kilometers without repeaters. In many applications, they are less expensive (per channel-kilometer) than metallic cable and microwave or millimeter-wave radio. Link availability is high because few, if any, repeaters are required. Maintainability is generally good and getting better as connectors become more standardized and splices more simplified. The light weight and small size of cables make them easy to install, store, and ship. Optical fibers are immune to EMI and electromagnetic pulse (EMP), but not to nuclear radiation, which produces increased attenuation through fiber darkening. Special radiation-resistant fibers are now available.

4.1.2 **Alternatives to fiber optics.** The key issues involved in the choice of media for military systems are cost, reliability-availability-maintainability (RAM), ease of installation, EMI susceptibility and security, and EMP immunity. Table II summarizes the relative merits of each of the suitable media with regard to the key issues. U.S. Air Force Communications Command Technical Report, TR 82-06-EZ, Final Technical Report for Base Transmission Path Trade-off Analysis, provides guidance for conducting a detailed comparative analysis (including life-cycle cost analysis) of the competing media.

4.1.2.1 **Paired-wire cable.** Wire pairs in paired cable are suitable for transmission of pulse-code modulation—time-division multiplexed (PCM-TDM) and frequency-division multiplexed (FDM) voice signals. A single wire pair can handle 24 voice channels in FDM, or 48 channels in PCM-TDM. Cables containing up to 2400 pairs are available. On the other hand, expansion capability in existing cables often makes it cost-effective to install cable carrier systems to satisfy increasing traffic demands. Digital transmission over pairs originally installed for analog transmission usually requires removing existing loading coils and build-out capacitors, because loaded cable severely attenuates the higher frequencies required for high data rate transmission. Moreover, new repeaters must be installed for digital transmission, often every two kilometers, depending on cable structure. Paired cable provides good transmission reliability in terms of

TABLE I. Applications of fiber optic communications.

Application Area	Principal Advantages	Principal Functions	Needed Advances
Communications	Large bandwidth Large repeater spacing Low cost/channel-km Small size and weight Minimal crosstalk and interference	Trunks (long haul) Local area networks Dedicated networks CATV/CCTV Wired City (interactive communications)	More reliable, lower cost connectors Improved couplers Lower system cost Higher-radiance sources Easier connector installation
Government and Military	Immunity to EMP Small size and weight Inconspicuous Reduced use of strategic materials No ground loops	Interconnect facilities Military communications Radar remoting Aircraft and shipboard control and on-board communications Surveillance CCTV Weapons and surveillance instrumentation Base communications Tactical communications	More rugged, more reliable connectors Improved cable structures Better source reliability Development of improved transducers Simpler field splicing and connectorization Nuclear-hardened fibers
Computer	Large bandwidth Minimal crosstalk and interference Small size Equalized data transfer rate	CPU-peripherals connection Local area networks Distributed systems CPU distributed architecture improvements	Better connectors Better source efficiency and bandwidth Greater source radiance Improved couplers Improved multiplexing techniques
Industrial Control	Immunity to interference Fewer electrical connections Performance within wide temperature range	Process control Interference-free communications in power plants Image transfer Use in explosion-, radiation-, and fire-prone environments Sensors	Compatible input-output transducers Lower systems cost Improved cable structures Improved sensors
Instrumentation	Immunity to interference Small size and weight Cable flexibility	Use in small, low-weight instruments Medical applications (image transfer) Image transfer in areas of difficult access	Better connectors Lower systems cost

Downloaded from http://www.everyspec.com

Downloaded from http://www.everyspec.com

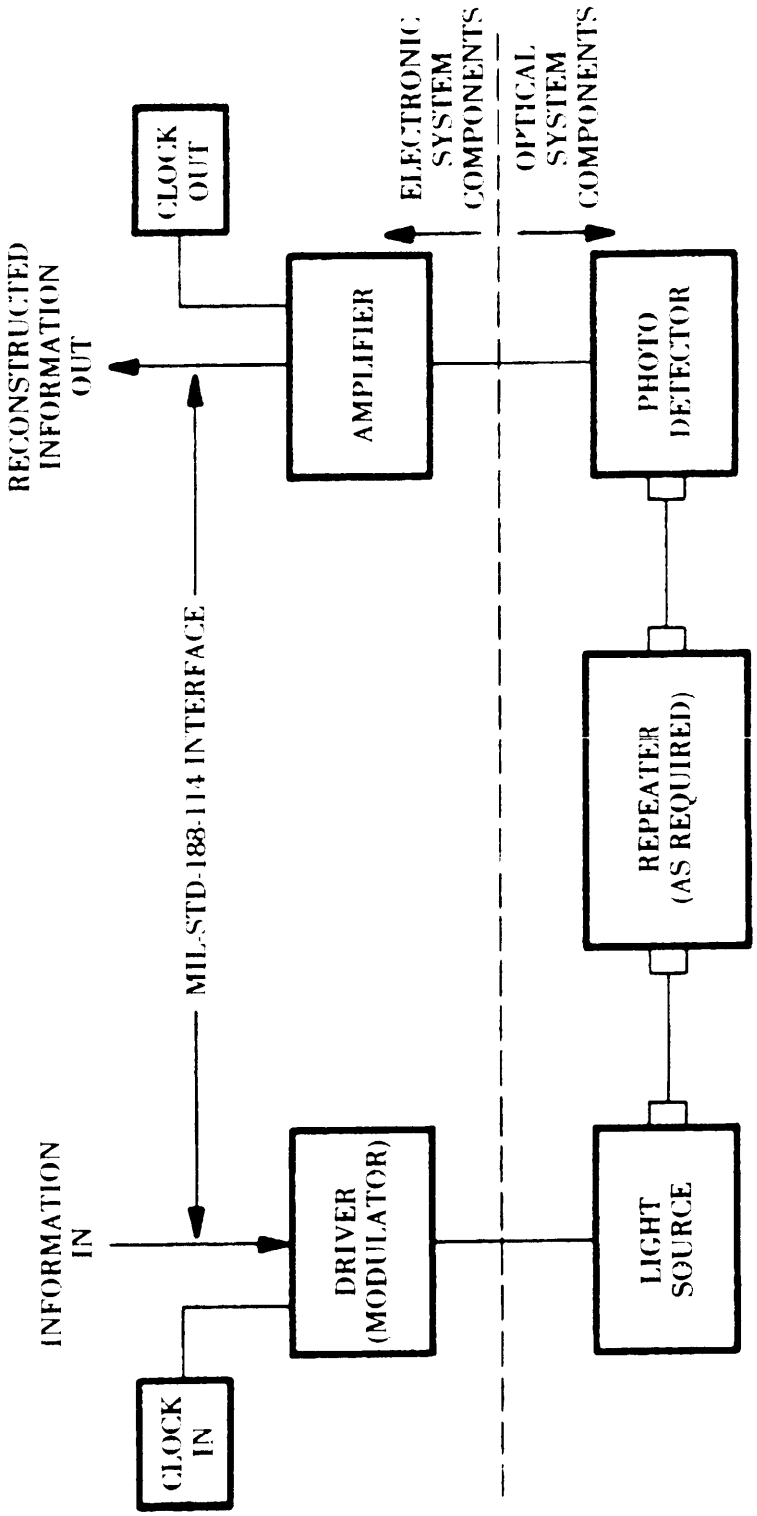

FIGURE 1. Block diagram, fiber optic communications link.

Downloaded from http://www.everyspec.com

maintaining constant signal levels. Long-term availability is high due to long-life cable design. Maintenance generally consists of replacing repeaters. The wire pairs are highly susceptible to EMI, although some protection can be provided by wrapping cables in a metalic sheath or shielding individual pairs. They are also subject to compromising emanations. Finally, the ability of wires to conduct EMP-induced currents to susceptible equipment is a major drawback in military applications.

4.1.2.2 **Coaxial cable.** Coaxial cable is a wideband medium, capable of handling bandwidths up to hundreds of megahertz. Although the cable and wideband repeaters cost more than paired cable systems, the larger channel capacity results in roughly equivalent cost per channel-kilometer. Coaxial cable is less susceptible to the environmental conditions (temperature and humidity) that affect paired cables and thereby offers higher reliability. The relatively fragile cable and the lower mean time between failure of the wideband repeaters, compared to paired cable systems, adversely influences availability, but simple standardized connectors also facilitate cable installation. Coaxial cables, however, take up more space than paired cables when installed in ducts, and are susceptible to ground loops. Moreover, the radiation leakage they produce constitutes an electromagnetic security problem. They suffer the same drawback as paired cables with regard to EMP, since they conduct EMP-induced currents to susceptible equipment. Maintenance requirements are infrequent but can involve difficulty in cases of cut cables.

4.1.2.3 **Microwave radio.** Radio-frequency band limitations in the microwave radio spectrum generally limit systems to no more than 1800 FDM or 384 PCM-TDM voice channels. Microwave radio equipment costs less per channel, installed,than paired cable and about the same as coaxial cable for high channel-density systems up to about 50 km in length. At longer lengths, microwave radio is less expensive than either cable type, exclusive of real estate. Microwave radio is subject to both short-term and long-term reliability problems produced by fading due to atmospheric anomalies. Availability is high because of the normal use of hot standby terminal equipment.The inaccessibility of sites and rugged site conditions sometimes impose installation and maintenance difficulties. Microwave radio is highly susceptible to EMI and jamming. It also provides an easily intercepted signal. The microwave antenna and transmission line provide an excellent path for induced EMP currents to reach to susceptible equipment.

4.1.2.4 **Millimeter-wave radio.** Millimeter-wave radio operates outside the congested microwave frequency spectrum and offers bandwidth capabilities of hundreds of megahertz. The pronounced effects of rainfall and atmospheric attenuation at millimeter wavelengths shorten path lengths. Since terminal costs are roughly similar to those of microwave radio, the shortened paths lead to increased link costs. Availability and maintainability, EMI susceptibility, electromagnetic security, and EMP immunity are similar to those of microwave radio.

4.1.3 **Long haul fiber optic communications systems.** Low loss, large bandwidth fiber optic links provide an alternative to microwave radio links, such as the 4- and 8-GHz links of the Digital Radio and Multiplexer Acquisition (DRAMA) military communications system and coaxial cable systems.

4.1.4 **Tactical fiber optic communications systems.** Tactical fiber optic communication systems must meet requirements of field survivability and ease of connection/disconnection. The length of the fiber optic cables must be limited so that the weight of the cable and reel meets the two-man lift requirement. In addition, connectors vice splices must be used to allow quick connection and disconnection of cable assemblies to form a link. The loss introduced by the connectors significantly limits the length of links that can be achieved without repeaters.

Downloaded from http://www.everyspec.com

TABLE II. Characteristics of alternate transmission media.

Characteristic	Paired Cable	Coaxial Cable	Microwave Radio	Millimeter wave Radio	Fiber optic Cable
RAM*	Good	Good	Poor	Poor	Good
Installation	Easy	Easy	Difficult	Difficult	Easy
EMI** immunity	Poor	Fair	Poor	Poor	Excellent
EMP immunity	None	None	None	None	Complete***
Interface electronics costs	Low	Low to moderate	Moderate to high	Moderate to high	High

*Reliability, Availability, Maintainability
**Electromagnetic interference
***Provided cable has no metallic conductors

4.1.5 **Fixed base communications systems.** Fixed base communications systems accommodate normal voice and data trunking, local area networks (LAN's), closed circuit television (CCTV) systems, and radar remoting. The short distances permit use of inexpensive components.

4.1.5.1 **Local area networks (LAN's).** Local area networks provide interconnection of voice, data, and video transmissions in a geographically restricted area, such as an office, or group of buildings. Fiber optics, because of its large bandwidth, provides greater channel capacity than the two most commonly used LAN transmission media: twisted pair and coaxial cable. Fiber optics is also immune to EMI, and provides no interceptible radiation. However, because fiber optic branching is cumbersome and introduces large losses, fiber optic cable is used mainly for point-to-point communication. With the development of improved couplers, fiber optics will become more appropriate for use in LAN's. Three basic LAN topologies exist — bus, ring, and star — each with its own specific advantages. Configurations are shown in figure 2. These networks all use less cable than networks using dedicated lines.

4.1.5.1.1 **Bus topology.** The bus configuration uses bidirectional T couplers (paragraph 4.11.1) to extract and insert signals to a single main transmission line, as shown in figure 2A. The bus carries many multiplexed signals, and information travels both downstream and upstream. A typical application for this topology, also called the multidrop network, is in a computer center, with the LAN interconnecting a central processing unit (CPU) and its peripherals — disks, printers, and monitors. The nodes are passively interconnected, therefore, highly reliable. Optical power levels must be within the dynamic range of every receiver in the system, so as not to saturate the nearest receivers, nor fall below signal detection requirements at the farthest receivers.

Downloaded from http://www.everyspec.com

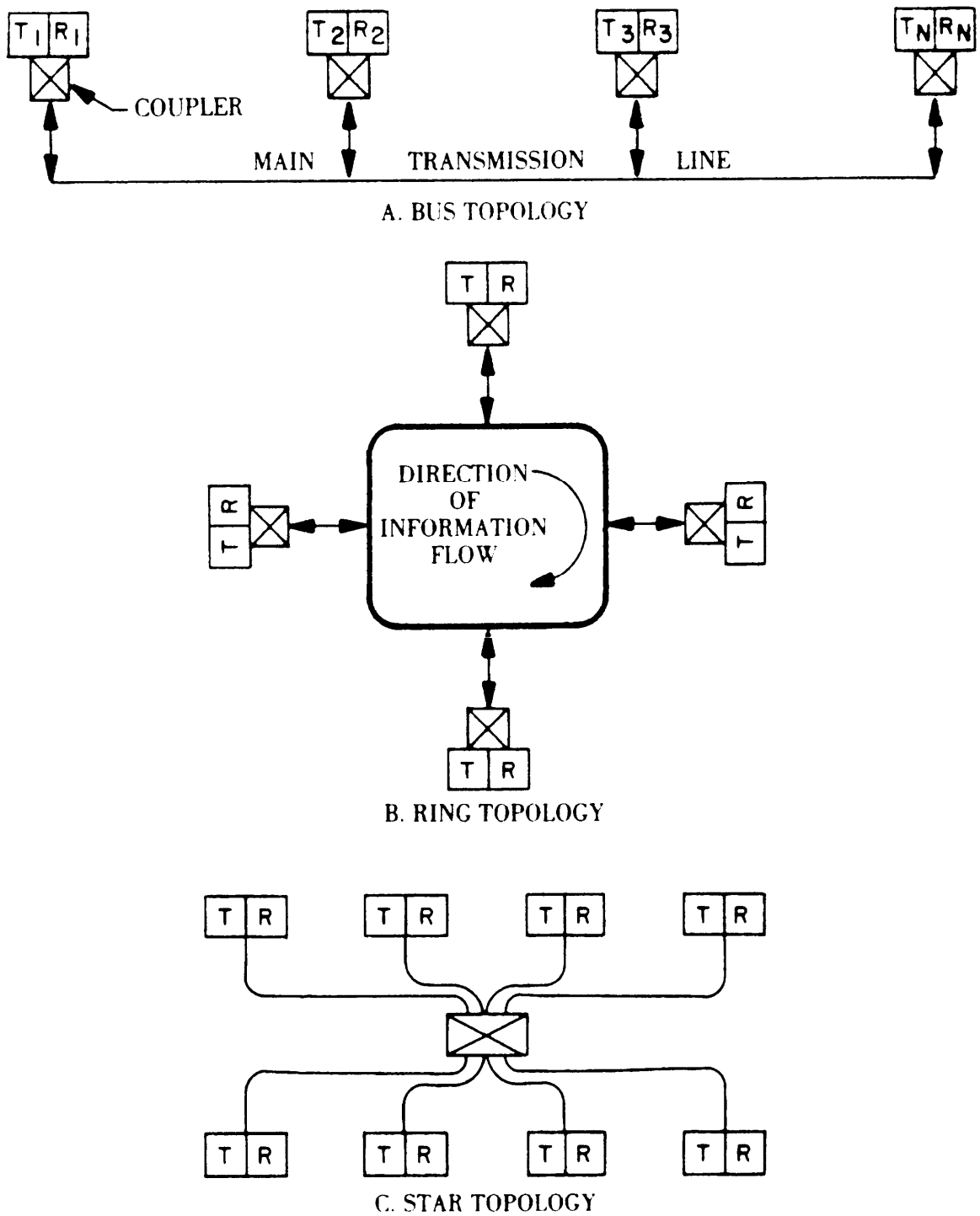

FIGURE 2. LAN topologies.

Downloaded from http://www.everyspec.com

4.1.5.1.2 **Ring topology.** Also known as the loop network, ring topology workstations pass information in one direction around the ring (figure 2B), with in-line repeaters usually located in each node; thus the transmission between nodes is point-to-point. Light is tapped from or injected into the main transmission line by means of T couplers with similar loss penalty to that of a bus topology. Because of this serial, one-directional flow, failure of one node could interrupt information flow. Schemes for bypassing failed nodes have been proposed and are under consideration by voluntary U.S. standards organizations. Some systems using such schemes are

factory or multi-building environment. When in-line repeaters are used, ring topologies have the advantage of regenerating the signal at each node.

4.1.5.1.3 **Star topology.** The star topology (figure 2C) allows several terminals to be directly coupled to a single common node, where light is mixed and distributed by a star coupler (paragraph 4.11.2). Having only one node, star topologies minimize coupler use, and hence, coupler losses. On the minus side, the reliability of the entire network depends on a single star coupler.

4.1.5.2 **Surveillance CCTV.** Fiber optic technology is suitable for transmission of video signals using either analog or digital transmission. Although intensity modulation of an LED light source can be accomplished for analog transmission, the large bandwidth and inherent suitability for digital transmission make fiber optic technology more applicable to digital video. Analog video continues in use because of simplicity.

4.1.5.3 **Radar remoting.** Analog transmission of video signals, using the inherent wide bandwidth of fiber optic communication systems, accomplishes transfer of the image and information generated by a radar scan.

4.2 **Optical fiber composition.** An optical fiber (figure 3) is composed of a central cylindrical core of higher refractive index (n_1) and a concentric cladding of lower refractive index (n_2). (Index of refraction is the ratio of the speed of light in a vacuum to its speed in a given medium.) The most common fibers for communications systems have glass or fused silica core and cladding, although plastic-clad glass or even all-plastic construction is used in applications allowing less bandwidth and more attenuation. Glass-clad fibers are covered by an outer protective plastic coating which has no effect on light propagation. This coating protects the glass fiber from mechanical damage and from strength and transmission degradation due to exposure to air.

4.2.1 **Optical fibers as waveguides.** Fibers act as tubular mirrors, with the cladding/core interface confining light to the fiber core. Light coupled into an optical fiber is prevented from escaping by inward reflection within the core.

4.2.1.1 **Snell's law.** Snell's law deals with the change of direction of light rays as they pass from a medium of one refractive index to another. Understanding of three terms is important to the discussion of refraction. The "normal" is the imaginary line perpendicular to the interface of the two materials, in the case of fiber, to the interface between the core and cladding. The "angle of incidence" is the angle between the normal and the incident ray. Referring to figure 4 for definition of angles θ_1 and θ_2, Snell's law states

$$n_1 \sin\theta_1 = n_2 \sin\theta_2 \qquad \text{(Equation 4-1)}$$

where n_1 and n_2 represent media of high and low indices of refraction, respectively.

code of 99999 is used. The point coincides, where possible, with the

Downloaded from http://www.everyspec.com

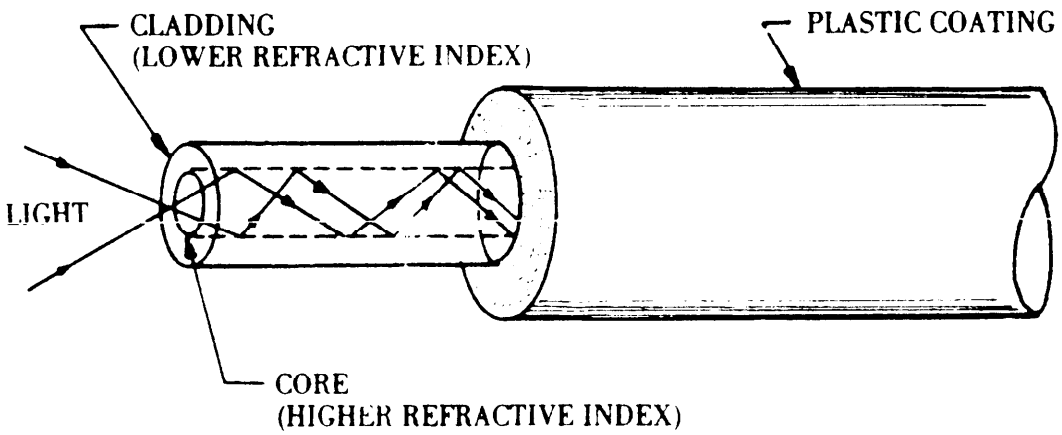

FIGURE 3. Basic optical fiber composition.

Downloaded from http://www.everyspec.com

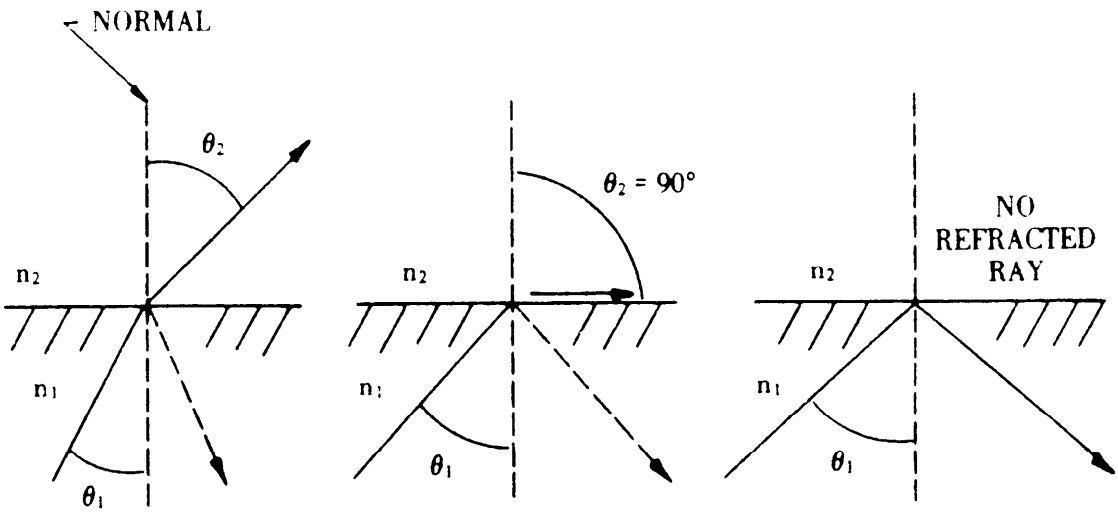

4A. $\theta_1 < \theta_c$ 4B. $\theta_1 = \theta_c$ 4C. $\theta_1 > \theta_c$

θ_1 = ANGLE OF INCIDENCE

θ_2 = ANGLE OF REFRACTION

θ_c = CRITICAL ANGLE

n_1 = CORE REFRACTIVE INDEX

n_2 = CLADDING REFRACTIVE INDEX

$n_1 > n_2$

SNELL'S LAW: $n_1 \sin\theta_1 = n_2 \sin\theta_2$

FIGURE 4. Reflection, refraction, and critical angle.

Downloaded from http://www.everyspec.com

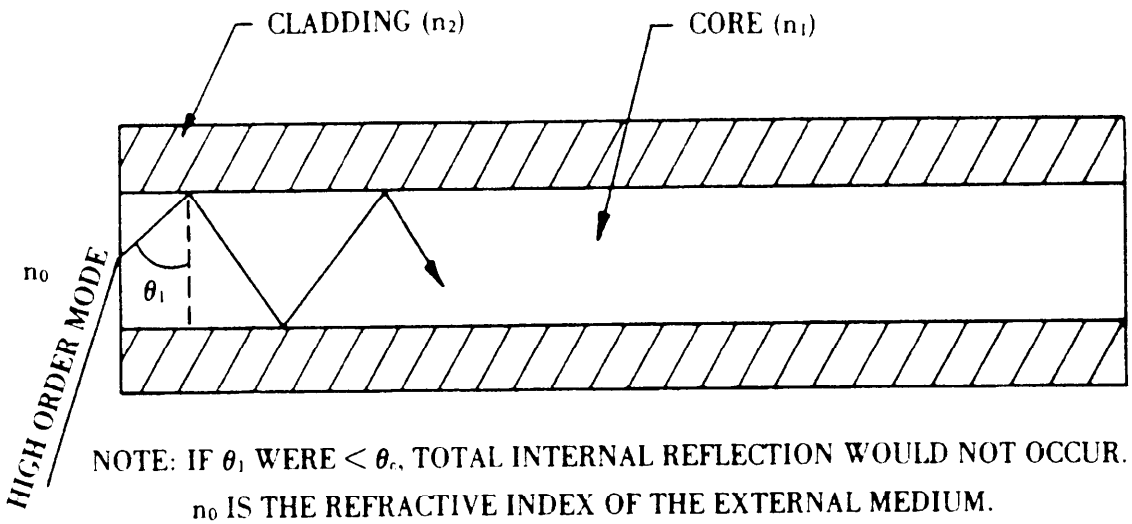

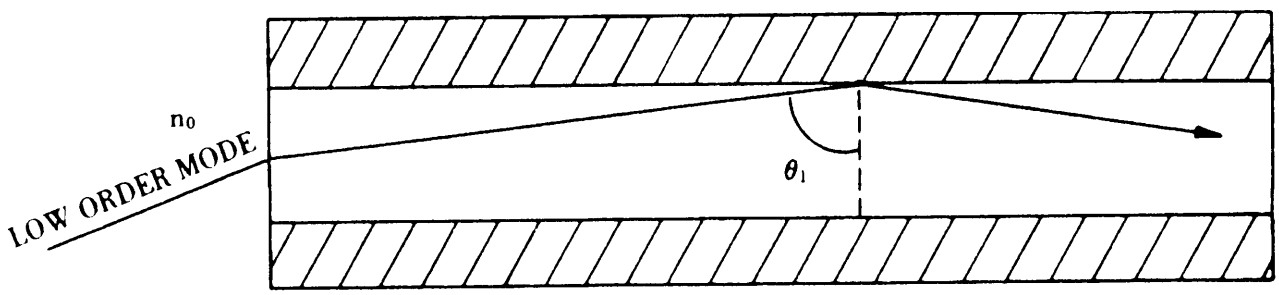

FIGURE 4D. Total internal reflection within a fiber.

Downloaded from http://www.everyspec.com

The refracted ray entering the lower index is bent away from the normal, as shown in figure 4A. At the "critical angle," the refracted ray is bent 90 degrees from the normal and just grazes the interface (θ_2 = 90 degrees), as illustrated in figure 4B. The critical angle of incidence can be described by

$$\sin\theta_c = n_2/n_1,\ n_1 > n_2 \qquad \text{(Equation 4-2)}$$

When the angle of incidence exceeds the critical angle, the light ray is totally reflected at the interface, a characteristic called total internal reflection (figure 4C). At angles less than the critical angle, most of the energy in the light ray escapes, as illustrated in figure 4A. The discussion in this text concerns only rays passing through the axis of the fiber (meridional rays). Skew rays propagate without passing through the axis of the fiber and will not be dealt with here, due to the mathematical complexity of their behavior. For most purposes, it is sufficient to assume that skew rays will behave in much the same way as meridional rays.

4.2.1.2 **Numerical aperture.** The angle of incidence for total internal reflection depends on the relative values of the indices of refraction of the core and cladding. Total internal reflection takes place only for rays striking the interface at angles greater than or equal to the critical angle. This gives rise to the acceptance cone (figure 5) described by the acceptance angle θ_A, which is the maximum angle, with respect to the fiber axis, at which an entering ray will experience total internal reflection. The sine of the acceptance cone half angle is called the numerical aperture (NA), and is a measure of the light-gathering ability of the fiber. NA is directly related to the refractive index of the core and cladding. Applying Snell's law, and assuming air (refractive index of 1) as the external medium, the following equation can be derived, showing that NA is a function of the refractive indices of the core and cladding in a step-index fiber:

$$NA = \sin\theta_A = \sqrt{n_1^2 - n_2^2} \qquad \text{(Equation 4-3)}$$

NOTE: Rays of light are shown entering the center of the fiber in figure 5. Similar light cones obeying the same analysis are incident at an infinite number of points on the core-air interface. This does not affect the calculation of NA.

4.2.2 **Distortion.** Distortion, an inherent property of all optical fibers, causes pulse broadening in digital transmission (figure 6). When pulses broaden to the point where they begin to merge, the phenomenon is called intersymbol interference. The upper limit on bandwidth-distance factor is a function of distortion. Distortion can be the determining factor limiting link length in low-attenuation fibers, that is, when attenuation is not the limiting factor. Distortion is usually measured in picoseconds per kilometer.

4.2.2.1 **Distortion *vs.* Dispersion.** The terms distortion (paragraph 4.2.2) and dispersion (paragraph 4.2.2.3) are often used synonomously, and this has been the source of a great deal of confusion. This handbook abides by the definitions in FED-STD-1037, which the reader should consult. In any event, it is safe to assume that whenever light rays in a fiber propagate along different paths or at different speeds, the signal will be distorted at the far end. Mechanisms contributing to distortion are discussed in paragraphs 4.2.2.2 thru 4.2.2.6.

Downloaded from http://www.everyspec.com

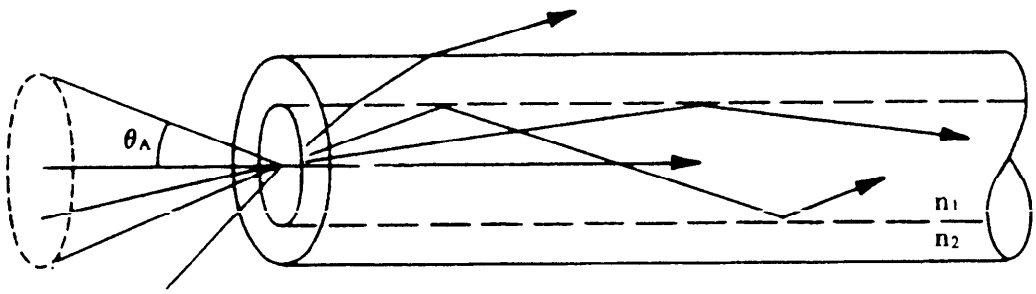

$$\sin\theta_A = \sqrt{n_1^2 - n_2^2}$$

n_1 = CORE REFRACTIVE INDEX

n_2 = CLADDING REFRACTIVE INDEX

$n_1 > n_2$

FIGURE 5. Acceptance cone.

Contains the one-letter plus one or two-number code representing an UNC

Downloaded from http://www.everyspec.com

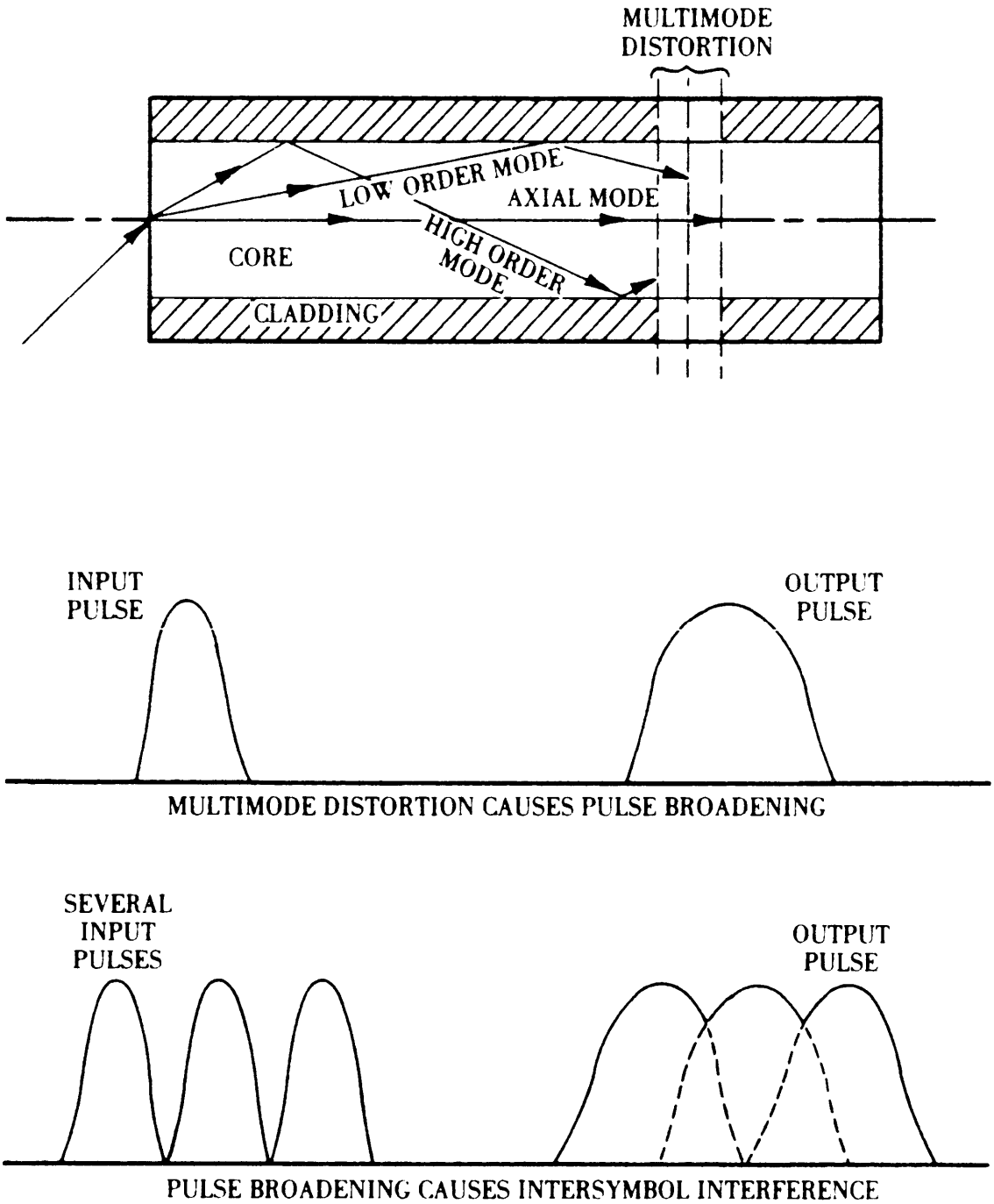

FIGURE 6. Multimode Distortion, Broadening, and Interference.

Downloaded from http://www.everyspec.com

4.2.2.2 **Multimode distortion.** In multimode fibers, light can travel different paths within the fiber core. These paths, or propagation modes, vary in length. Because of this variance, light will exit a fiber over a time interval slightly longer than that over which it entered. This phenomenon, known as multimode distortion, causes an undesirable broadening of the signal waveform as it progresses along the fiber. Multimode distortion is most prominent in multimode step-index fibers, where it is the major form of distortion. It is less evident in graded-index fibers and non-existent in single-mode fibers.

4.2.2.3 **Dispersion.** Within a given fiber, different wavelengths of light have different propagation characteristics. This variance with wavelength is called dispersion, and like multimode distortion, can cause pulse broadening. Unlike multimode distortion, dispersion affects all types of fiber, even single mode. Two types of dispersion fall within the scope of this text: material dispersion and waveguide dispersion.

4.2.2.3.1 **Material dispersion.** The speed of light through a fiber varies with refractive index, which itself is wavelength-dependent. Light having a wavelength at which the refractive index is lower will travel faster than light at a wavelength at which the refractive index is higher. Even the light source with the narrowest spectral width emits over a finite band of wavelengths. As illustrated in figure 7, choice of either a source with narrow spectral width, or of a fiber material with reduced variation of index with wavelength will lessen the effects of material dispersion. Material dispersion is the major contributor to dispersion in a single-mode fiber.

4.2.2.3.2 **Waveguide dispersion.** Waveguide dispersion is attributable to the dependence of phase and group velocities on the geometric characteristics of the waveguide. The fact that light wave peaks occur at different locations in the waveguide with changing frequency causes intensity differences when all reflections are added together. This causes pulse broadening, but waveguide dispersion usually has much less effect than material dispersion and can be ignored in most cases.

4.2.2.4 **Zero dispersion near 1300 nanometers.** In fused-silica single-mode fibers, there is sometimes an operating wavelength at which material dispersion and waveguide dispersion are equal in amplitude but opposite in sign. The result is total dispersion approaching zero. The exact frequency at which this occurs is a function of core diameter and refractive index profile. The range extends from about 1300 nm for a 10-micron core, to about 1600 nm for a 4-micron core. Choice of materials and core diameter make it possible to bring the wavelengths of minimum dispersion and minimum attenuation to coincide.

4.2.3 **Bandwidth-distance factor and rise time.** Bandwidth-distance factor, B_d, and rise time, t, like distortion, are measures that may be used to specify the pulse-broadening characteristics of an optical fiber. B_d is the maximum bandwidth-distance capacity of the fiber, and it is generally rated by the manufacturer. It is a bandwidth multiplied by distance product, which can be divided by link length to find the maximum useable bandwidth. (The maximum useable bandwidth is the "3-dB optical bandwidth," and is defined as the modulation frequency at which optical power has dropped to half the power of the unmodulated carrier.) The rise time of a fiber is determined by its dispersion and multimode distortion characteristics. It may be calculated from the rated distortion and dispersion characteristics as described in 5.2.9. (Rise time in optical applications follows the generally accepted definition: the time required for the amplitude response to increase from 10% to 90% of its full value.)

Downloaded from http://www.everyspec.com

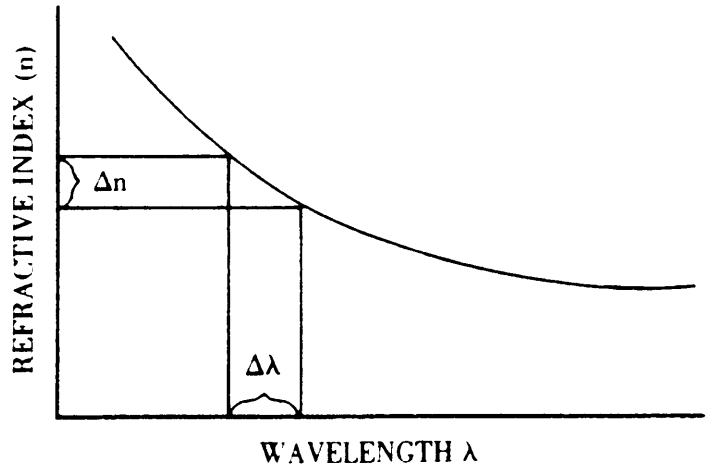

A. SOURCE WITH NARROW SPECTRAL WIDTH AND NORMAL FIBER.

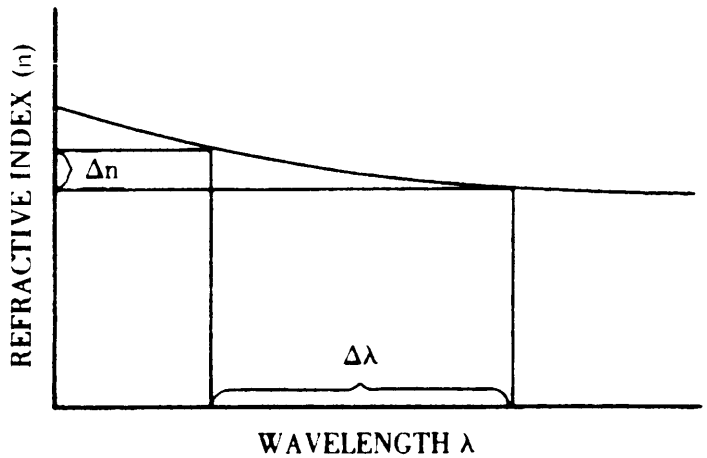

B. WIDEBAND SOURCE AND FIBER WITH REDUCED INDEX VARIATION.

NOTE: ACTUAL VALUES ARE NOT GIVEN BECAUSE GRAPHS ARE INTENDED FOR COMPARISON ONLY. THE CHANGE IN n (VERTICAL AXIS) IS INTENDED TO BE ABOUT THE SAME IN BOTH GRAPHS. AS Δn INCREASES, MATERIAL DISPERSION AND HENCE PULSE BROADENING ALSO INCREASE.

FIGURE 7. Effect of source spectral width and fiber index variations on material dispersion.

Downloaded from http://www.everyspec.com

4.2.3.1 **Optical bandwidth.** The optical bandwidth of a fiber is derived from the impulse response function of the fiber. If the function is Gaussian in shape, as is generally assumed, it can be shown that the 3-dB optical bandwidth, B_o is related to the full-width, half-maximum (FWHM) of the function by

$$B_o = 441/FWHM \qquad \text{(Equation 4-4)}$$

where B_o is in MHz and FWHM is in ns. It can further be shown that the rise time, t, is related to optical bandwidth, B_o, by

$$t = 315/B_o \qquad \text{(Equation 4-5)}$$

4.2.3.2 **Electrical bandwidth.** The previous paragraph (4.2.3.1) gives the expression for optical bandwidth which, as we know, yields the signal frequency at which optical power has dropped to one-half the zero-frequency value. This relates directly to the current I in the optical detector. However, the electrical power generated in the detector is, we know, proportional to I^2; therefore, a 3 dB drop in optical power (indicated by a 50% drop in I) results in a 6 dB drop in electrical power (indicated by a 75% drop in I^2). Thus, the 3 dB optical bandwidth is equal to a 6 dB electrical bandwidth (which is not used and therefore has not been defined elsewhere); the desired 3 dB electrical bandwidth must therefore be smaller than the 3 dB optical bandwidth. While the mathematics of the derivation are not simple, if the function is Gaussian in shape, it can be shown that

$$B_e = B_o/\sqrt{2} = 0.707\ B_o \qquad \text{(Equation 4-6)}$$

4.2.4 **Attenuation.** Attenuation (absorption and scattering) of light in a fiber is caused by material variations, microbends induced by mechanical stress, and surface imperfections at the core-cladding interface.

4.2.4.1 **Absorption and scattering.** Absorption, whereby light is converted to heat in the fiber core, and scattering, whereby energy is ejected from the core into surrounding areas, have the same result: a decrease in the energy reaching the detector. Absorption is caused by impurities and hydroxyl (OH^-) ions present in even the purest glass fibers (see the three narrow absorption peaks in figure 8). Broad infrared and ultraviolet absorption regions (labelled as "tails" in the figure) contribute additional absorption. Finally, Rayleigh scattering, due to variations in density and composition in the core material, causes further attenuation. (Rayleigh scattering is proportional to the inverse fourth power of wavelength and has a value of about 1 dB/Km at 1000 nm.) The overall loss resulting from all of these factors is shown by the highest (solid) trace in the figure, and is least in the neighborhoods of 1300 and 1500 nm. Conveniently, dispersion in single-mode fibers can be minimized at these wavelengths, as explained in paragraph 4.2.2.3.

4.2.4.2 **Microbending and microcracking.** Large-radius bends in optical fibers have negligible effect on attenuation. However, microbends increase attenuation. Microbends effectively decrease the critical angle so light that would otherwise be reflected to the core, escapes to the cladding. Microbends are curvatures of the fiber of small radius and spatial wavelengths of a few millimeters. Differential contraction of a tight buffer tube will sometimes cause microbending. This can be avoided by using a loose buffer tube, uniform cushion, or filling compound to prevent accumulation of moisture and to insulate the fiber from impressed microbends. Microbending can cause microcracks which increase attenuation and can also result in mechanical failure of glass fiber.

Downloaded from http://www.everyspec.com

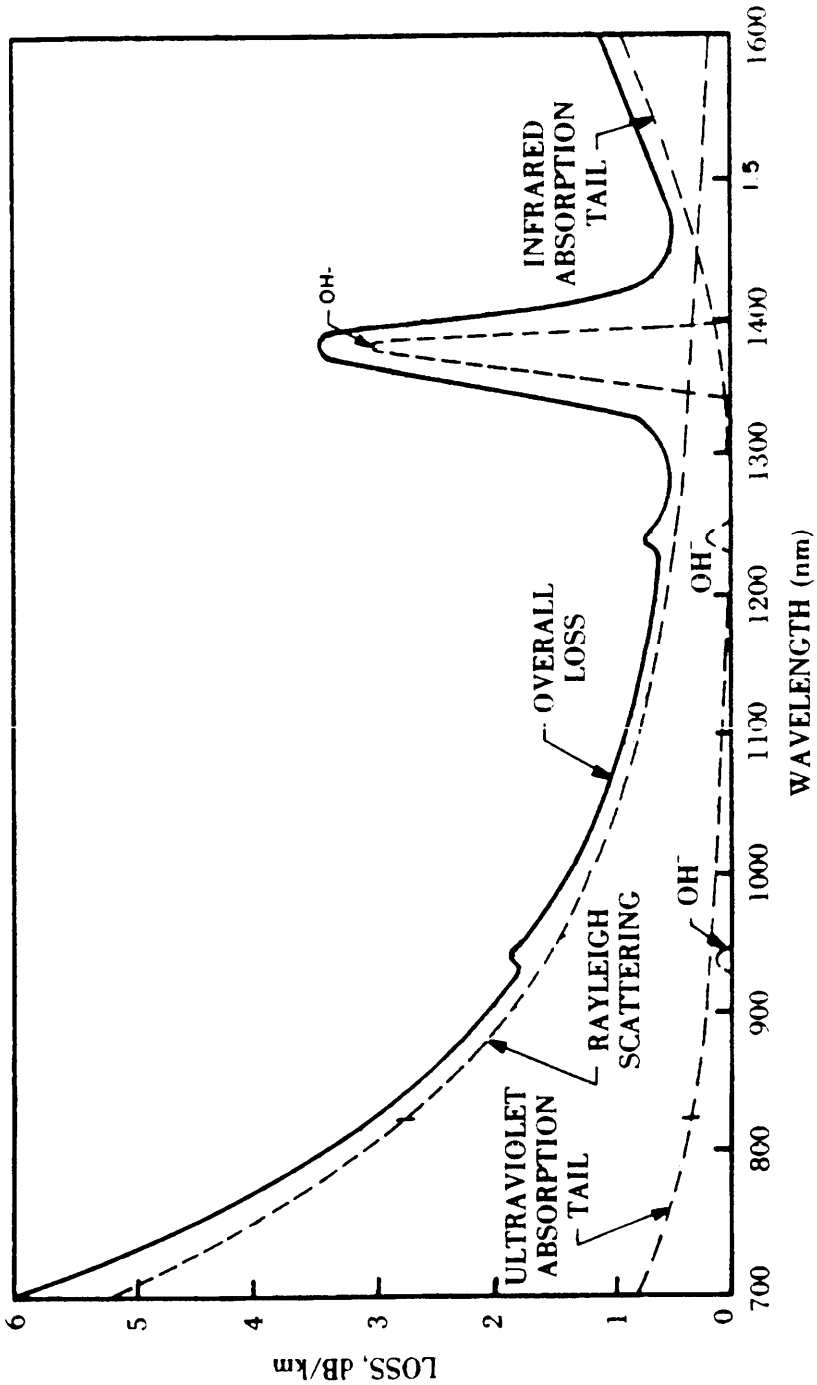

FIGURE 8. Typical spectral loss curve.

Downloaded from http://www.everyspec.com

4.2.4.3 **Leaky modes.** Leaky modes are higher order modes whose power is trapped partly in the fiber core and partly in the cladding. Leaky modes are attenuated after a distance, but may appear as transmitted energy in a short test fiber. Mode stripping, achieved by wrapping fiber around a mandrel, removes leaky modes.

4.3 **Types of optical fibers.** Optical fibers are classified by two methods: by material composition (paragraph 4.2), and by refractive index profile and number of modes of propagation. Classified by this latter method, the three types of fiber are:

a. Multimode step-index fiber.
b. Multimode graded-index fiber.
c. Single-mode fiber.

4.3.1 **Multimode fibers.** The core diameter of multimode fibers allows several modes of light to propagate, producing multimode distortion. Core sizes of glass multimode fibers range from 50 to 200 micrometers (μm), and even larger.

4.3.1.1 **Multimode step-index fiber.** Conceptually, the simplest fiber is the step-index fiber, with a core of high refractive index and concentric lower index cladding, with sharp interface between the two, illustrated in figure 9A. Step-index fiber produces high multimode distortion.

4.3.1.2 **Multimode graded-index fiber.** In a graded-index fiber, refractive index decreases continuously with radial distance from the center of the core, giving the fiber a nearly parabolic index profile (figure 9B). Light propagation occurs through refraction, with light rays turned back toward the core axis less sharply than the reflection angles in a step-index fiber. Light rays travel a wave-like course down the fiber. Graded-index fiber exhibits less multimode distortion than step-index fiber: light rays travel a longer path further from the axis, but they travel faster due to decreasing index of refraction further from the axis. A specialized type of graded-index fiber, called a depressed cladding or W-index fiber for its characteristic index profile, exhibits lower attenuation than conventional graded-index fiber. This fiber has a core and thin cladding surrounded by an external higher-index region. This unique composition prevents leaky modes from the cladding from re-entering the core.

4.3.1.3 **Comparison of multimode fibers.** Attenuation of the two multimode fiber types is comparable, but greater bandwidth-distance factor gives graded-index fiber the edge for long haul and high data rate use. Comparable size cores make ease of connection and amount of connector loss equivalent for both graded-index and step-index fibers. Step fibers have a larger numerical aperture than graded-index fibers. Graded-index is the fiber of choice; step-index fiber is virtually obsolete for communications purposes. Graded-index is used for all but the longest path and highest data rate applications, which require single-mode fiber.

4.3.2 **Single-mode fiber.** The core of a fiber can be reduced to a size (typically 2 - 8 microns) where only the axial mode can propagate (see figure 9C). Such fibers are called "single-mode" fibers. Single-mode fibers eliminate multimode distortion since only one transverse mode can propagate, giving these fibers the broadest bandwidth. Material dispersion, however, does affect single-mode fibers, with pulse components of different wavelengths taking different times to traverse a fiber.

Downloaded from http://www.everyspec.com

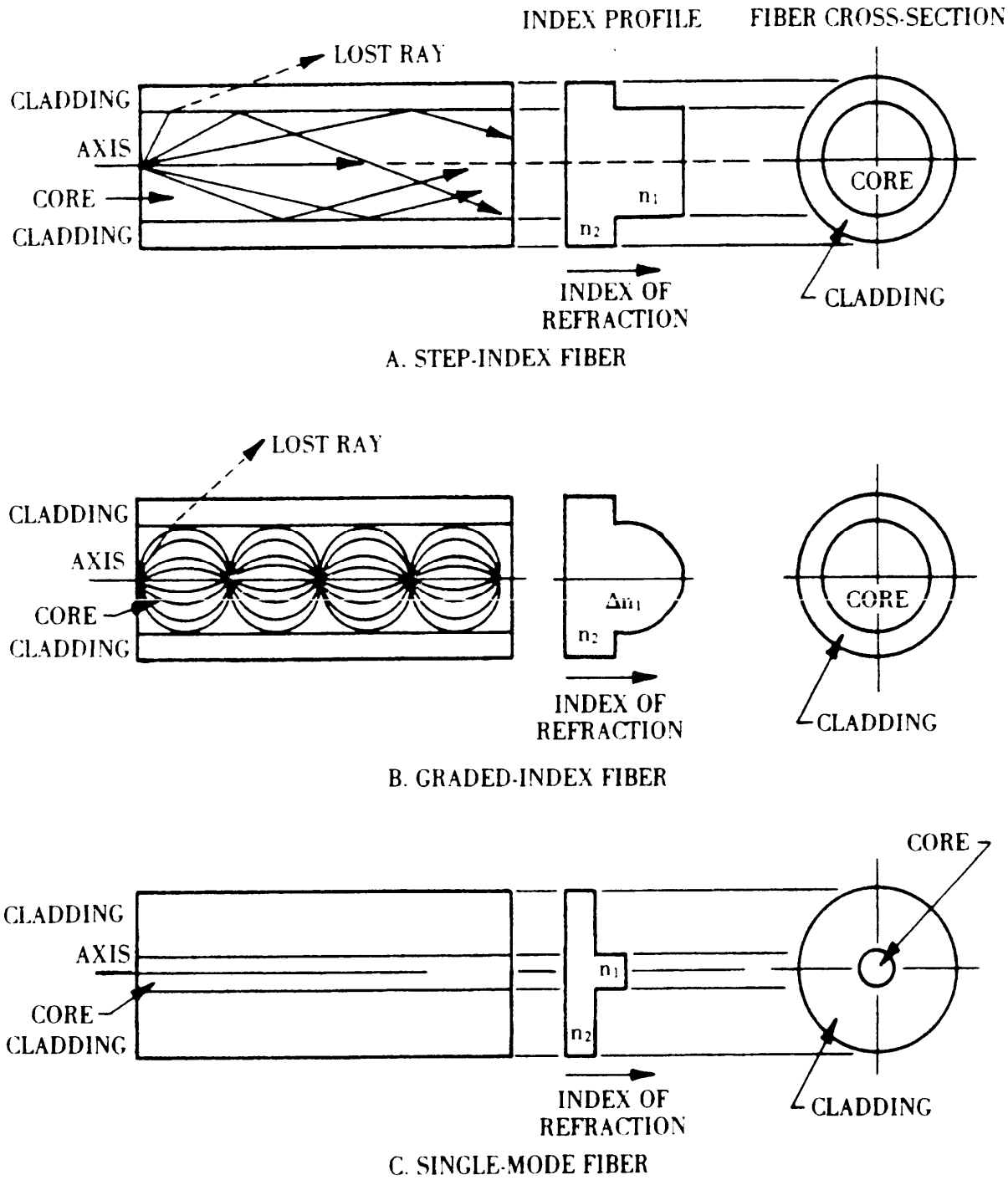

FIGURE 9. Index profiles and modes of propagation.

Downloaded from http://www.everyspec.com

4.3.3 **Comparison of single-mode and multimode fibers.** Very large bandwidths make single-mode fibers best for long distance, high data rate applications. However, the small diameter core renders the coupling of light into the fiber difficult, both at the source and at connectors. Single-mode fibers are much more sensitive to connector lateral misalignment than multimode fibers.

4.4 **Fiber optic cable.** The delicate optical fibers are cabled for protection against mechanical and environmental abuse during installation and operation. Fibers are cabled using many of the same materials used to cable metallic wire, but using different cabling techniques. Unlike metallic conductors, however, optical fibers do not contribute to the strength of a cable. In fact, the fiber itself must be decoupled from tensile, thermal, and vibrational loads.

4.4.1 **Composition.** Strengthened fiber optic cables are used in all outdoor and most indoor uses. (Unstrengthened cables are used in low-cost, multiple line links in controlled environments, such as within a rack.) Following is a list of typical components of fiber optical cable, although not every cable will contain each constituent, and configurations will vary.

a. Coated optical fiber, with plastic or silicon elastomer coating to protect the fiber from scratches and microbending.

b. Single-fiber buffer tubes or multi-fiber ribbons to cushion fibers and isolate them from longitudinal stresses during installation and from microbending during operation. Buffer tubes are not to be confused with the protective plastic or silicon fiber coating, also called a fiber jacket.

c. Central and distributed strength members, composed either of metallic or dielectric materials, to ensure adequate tensile strength during installation, and to resist kinking and crushing of the cable.

d. Polyester binder tape to hold buffer tubes in place.

e. Moisture-barrier compounds.

f. Outer and inner non-conducting jackets, composed of low-density polyethylene, resistant to abrasion, chemicals, fungus, moisture, and decomposition by ultraviolet radiation. High-density polyethylene is used in armored cable.

g. Corrugated steel tape for rodent protection.

h. Messenger-cable for support of some aerial cables.

4.4.1.1 **Cables with central strength member.** Central strength members can be either metallic or dielectric. A typical metallic strength member is a polyethylene-coated steel cable. Dielectric strength members are either urethane-coated aramid yarn (Kevlar) or an epoxy-glass composite rod. The dielectric strength member is ideal for applications requiring electrical isolation between terminals, such as for immunity from EMP. Both types provide protection from longitudinal stresses and small radius bends. Buffered fibers are helically stranded around the central strength member. Some cables with a central strength member also add annular strength members in the periphery of the cable, or around the tubed fibers. See figure 10.

Downloaded from http://www.everyspec.com

4.4.1.1.1 **Loose buffer tubes around central strength member.** Individual optical fibers are housed in tubes that minimize stress-induced microbends caused by disproportionate changes in cable length (figure 11). The fiber is coiled loosely within the buffer tube and the tube is sometimes filled with moisture-barrier compound. These extruded plastic buffer tubes generally have inside diameters of 0.5 to 2.0 mm.

4.4.1.1.2 **Tight buffer tubes around central strength member.** A tight buffer tube can be described as a soft plastic coating on the fiber (figure 11). This construction offers handling advantages over loose buffer tubes: they are resistant to abrasion and crushing and they prevent the ingress and migration of moisture. The outer diameters of tight buffer tubes range from 0.5 to 1.0 mm.

4.4.1.1.3 **Other arrangements with central strength member.** Some manufacturers thread a tight-buffered fiber within a loose buffer tube, offering advantages of both types of construction. Others use a reinforced element with channels approximating loose buffer tubes to house fibers, stranded around a central strength member, an arrangement known as slotted core construction. (See figure 12.) Hybrid cables incorporate both optical and electrical conductors.

4.4.1.2 **Cables with distributed strength members.** Two major techniques for the fabrication of these cables exist: one uses buffer tubes and Kevlar strength members, the other uses multifiber ribbons laid loosely in the core of a hollow, reinforced plastic tube.

4.4.1.2.1 **Military field tactical cable.** This lightweight, crush- and abrasion-resistant cable is designed for cross-country deployment. A dual-layered buffer tube surrounds each fiber: an inner layer of elastic compound cushions the fiber to prevent microbending loss when the fiber is flexed; a second buffer provides environmental and mechanical protection. Either two or four of these buffered fibers are packaged in a single pliable tube. A Kevlar strength member is incorportated both inside the tube, and within the outer polyethylene jacket. See figure 13.

4.4.1.2.2 **Cable without central strength member.** Construction of this cable is similar to the field tactical cable described in paragraph 4.4.1.2.1, but intended for lighter duty use. A coated fiber is packaged within either a loose or tight buffer tube. One or several of these tubes are wrapped with an inner polyurethane jacket, helically wound Kevlar yarn, and an outer polyurethane or polyvinyl chloride jacket. A filling compound is used in direct burial cable. See figure 14.

4.4.1.2.3 **Multifiber-ribbon cable.** Specifically intended for high-traffic, long haul application, these cables have 12 fibers laminated into a ribbon, with up to 12 ribbons loosely encased in the center hollow of a reinforced plastic tube (figure 15). Spirally wound steel support strands are embedded in the extruded plastic tube. A polyethelene jacket protects the tube.

4.4.2 **Applications.** Fiber optic cables, like conventional cables, are fabricated to meet the characteristic requirements of duct, direct burial, and aerial installation. Underwater cable has also been successfully installed. Also, as noted in paragraph 4.4.1.2.1, military field tactical cable is made to withstand the rigors of cross-country deployment and recovery.

4.4.2.1 **Cable designed for aerial installation.** Cable intended for aerial installation must have high tensile strength to withstand the stress of the weight of the suspended cable itself, as well as wind and ice loading. Requirements differ from underground varieties because of the added stress of exposure to varying environmental conditions. Aerial cables are either self-supporting or

Downloaded from http://www.everyspec.com

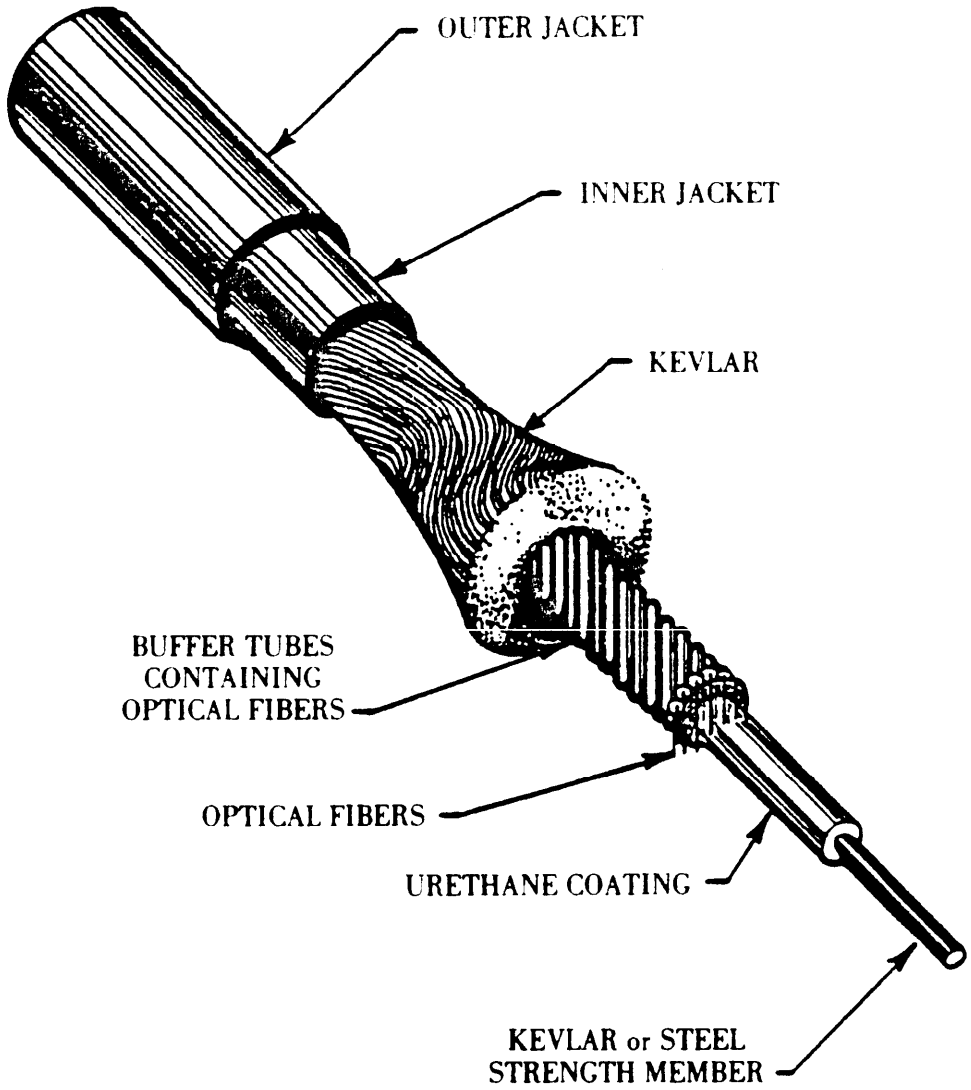

FIGURE 10. Typical fiber optic cable with central strength member.

Downloaded from http://www.everyspec.com

FIGURE 11. Optical fibers in loose and tight buffer tubes.

Downloaded from http://www.everyspec.com

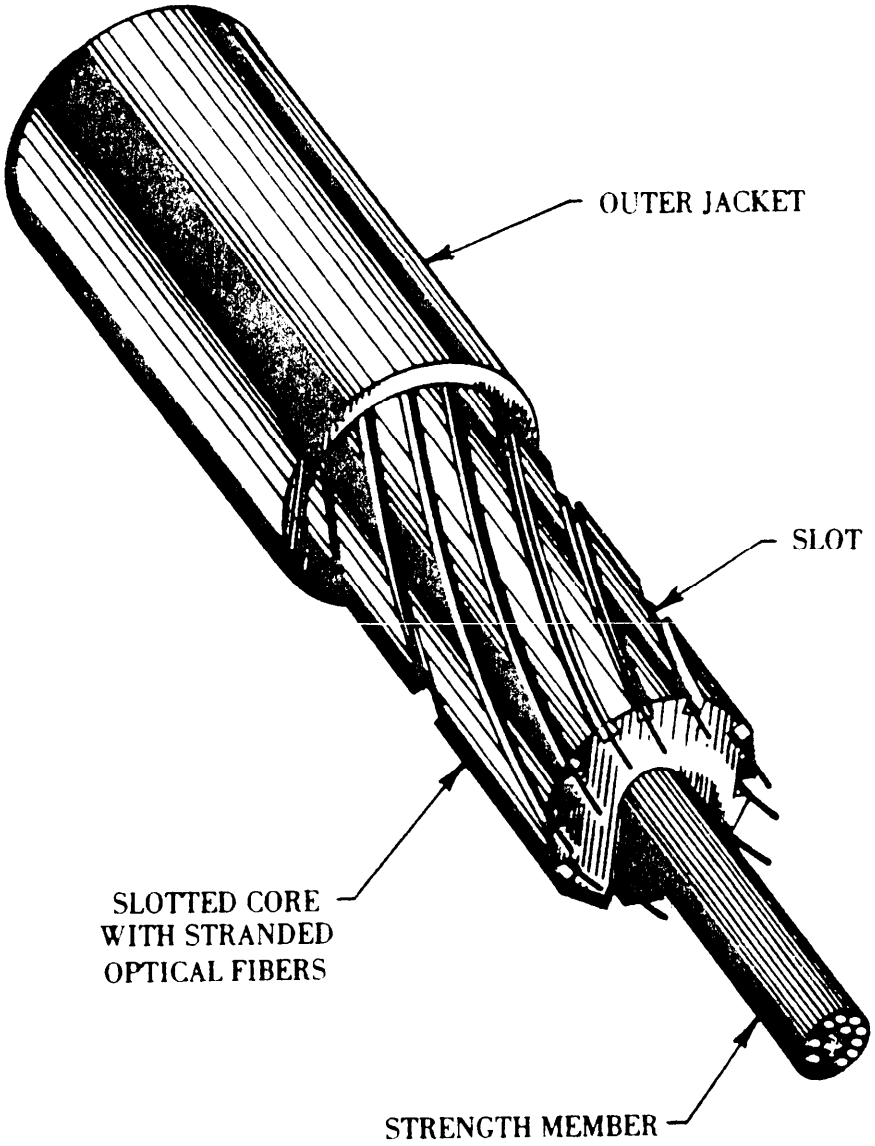

FIGURE 12. Slotted core fiber optic cable.

Downloaded from http://www.everyspec.com

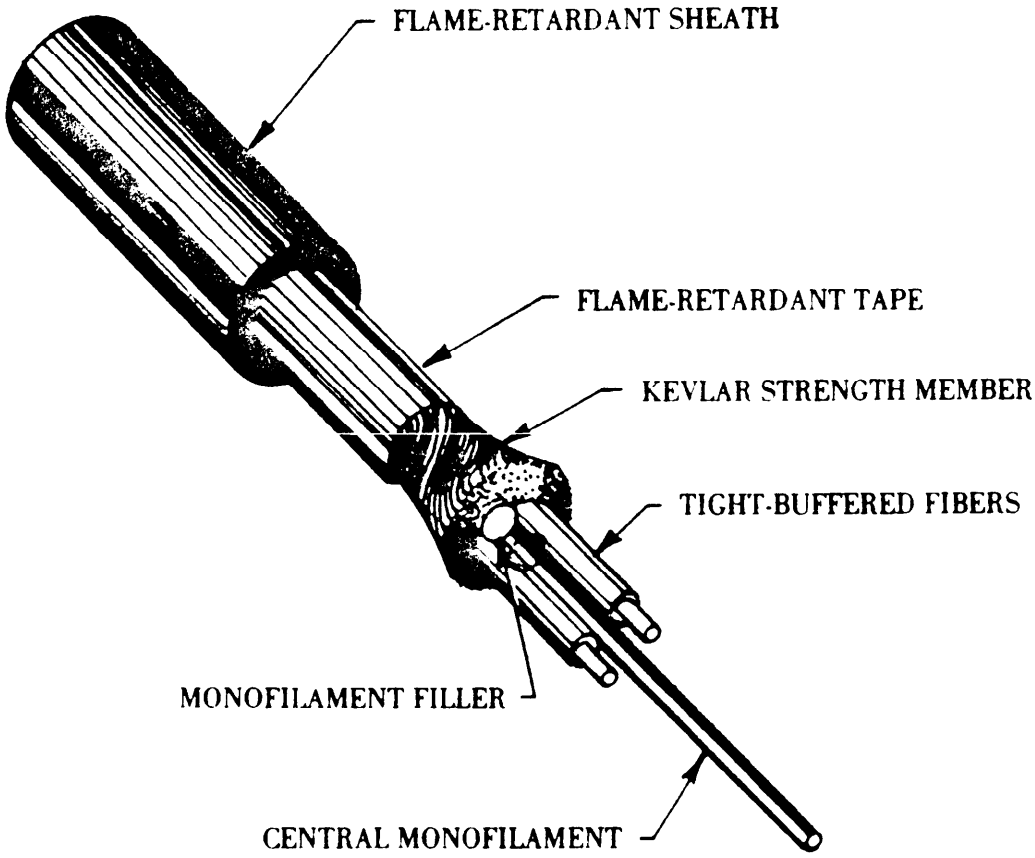

FIGURE 13. Military field tactical cable.

Downloaded from http://www.everyspec.com

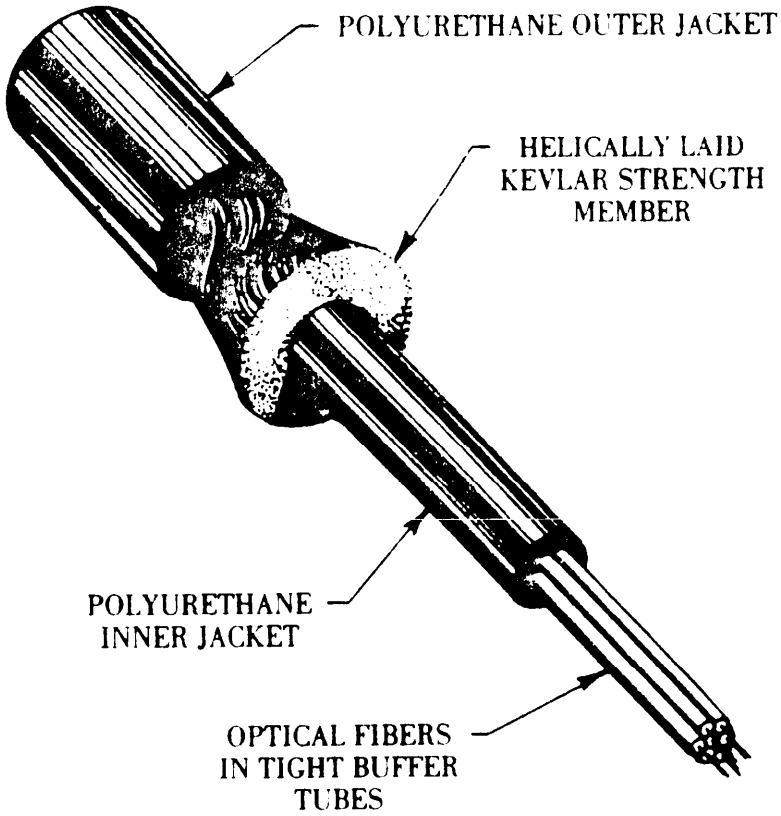

FIGURE 14. Distributed strength member fiber optic cable.

Downloaded from http://www.everyspec.com

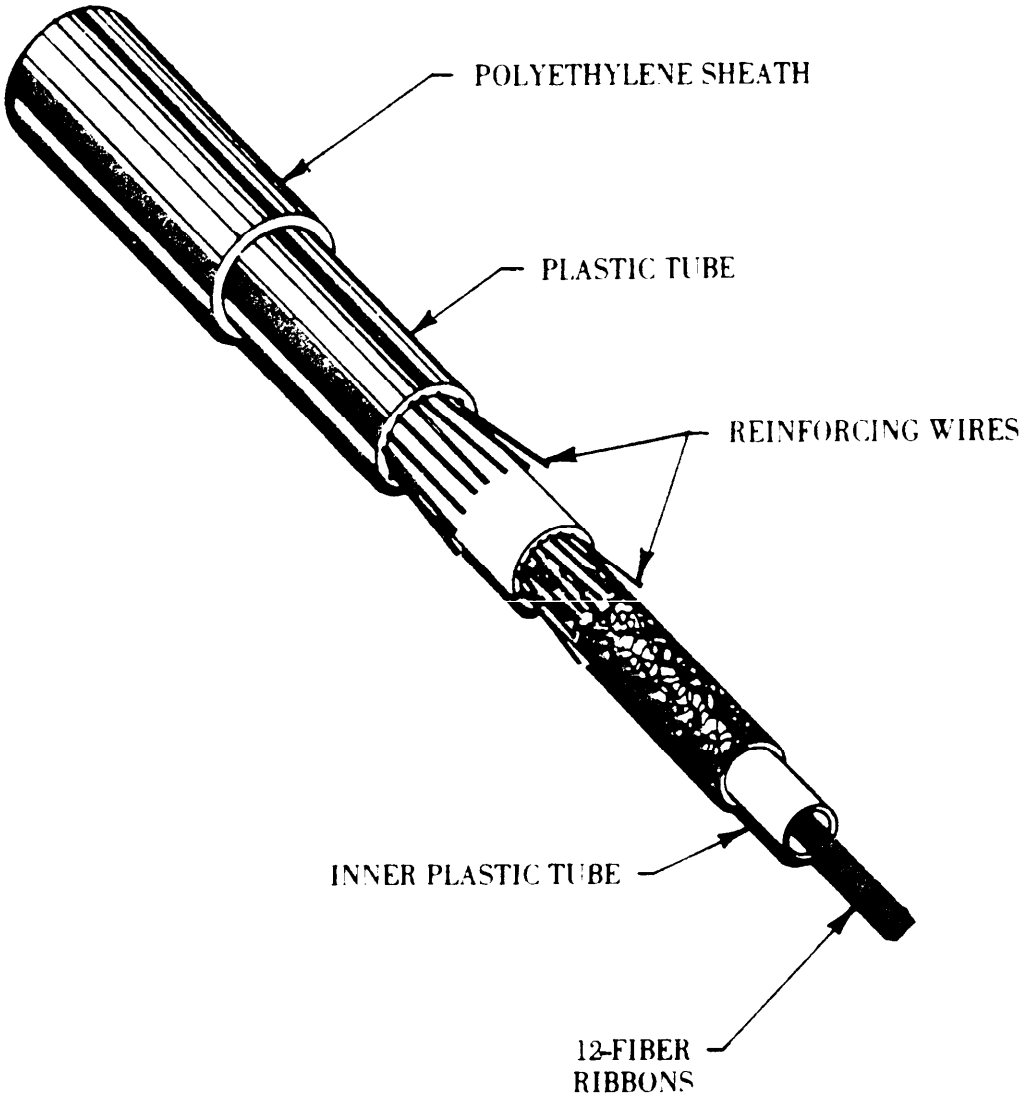

FIGURE 15. Multifiber-ribbon cable.

Downloaded from http://www.everyspec.com

lashed to a messenger cable. Because of the tendency toward microbending resulting from varying environmental conditions, aerial cables are often derated from specified attenuation performance. To keep out the elements, aerial cables may contain filling compound both in the spaces between buffered fibers, and within the loose buffer tubes themselves.

4.4.2.2 **Cable designed for duct installation.** The small diameter per capacity of fiber optic cable is a distinct advantage in crowded underground ducts. Fiber optic cables are pulled through ducts using the same techniques and equipment as for metallic cable. Strength members absorb tensile loads. To facilitate installation in crowded ducts, an inner duct technique is sometimes used. Using this method, a polyethylene jacketed aluminum or plastic tube is pulled into the duct. The fiber optic cable is pulled through this pre-lubricated tube. Standard duct lubricant which will not have a deleterious effect on the cable is used. The amount of lubrication is determined on a case-by-case basis.

4.4.2.3 **Cable designed for direct burial installation.** For protection against rodents, rocky terrain, shifting ground, and the rigors of plowed-in installation, direct burial cable is wrapped with a metallic steel tape. The polyethylene jacket is applied over this armor. Gel-filled buffer tubes and filling compound within the cable cavity protect against entry and migration of moisture.

4.4.2.4 **Cable designed for underwater installation.** The most important characterstic of underwater cable is reliability over the designed lifetime of the cable. Water can change the composition of glass, thereby affecting reliability. Underwater cables are usually double-armored and contain filling compound in all cable interstices. Any metallic strength members are protected from corrosion with a flooding compound.

4.4.3 **Splice cases.** A re-enterable splice case serves multiple functions of providing precision V-grooves for splices, organizing fibers, and providing individual strain relief for each buffer tube. In addition, splice cases provide protection from the weather, terrain, and rodents, and provide a means to organize and anchor multifiber terminations.

4.5 **Transmitters.** The transmitter package comprises the driver, the light source, and commonly, the pigtail, as shown in figure 16. The transmitter in a fiber optic communication system converts electrical energy into optical energy and launches that converted signal into the optical fiber. Fiber optic light sources are either light-emitting diodes (LED's) or the faster, higher power, laser diodes (LD's). Operating wavelength of the transmitter must be compatible with that of the receiver.

4.5.1 **LED's.** The LED is the preferred light source when less stringent system requirements permit its use. An LED light source has a longer life, is generally less expensive, and requires lower drive current than the higher performance LD. The LED is stable over a long lifetime. LED's are suited to analog applications because of their linearity — optical power output is a nearly linear function of drive current (figure 17). However, because of its broad angular spread of emission, and because the emitted area of light is larger than the core, the LED suffers from low coupling efficiency. LED's have broad spectral linewidth, as shown in figure 18, resulting in increased material dispersion. Spectral linewidth is the wavelength interval between half-power (3 dB) points. In addition, modulation rates are limited. See table III.

Downloaded from http://www.everyspec.com

TABLE III. Comparison of typical LED's and LD's.

Characteristic	LED	LD
*Coupled power (μW)(max) (into 50 μm core)	>50	3000
Radiant power (mW)(max)	20	20
Spectral linewidth (nm)	30 to 150	(<1) to 5
Wavelength (nm)(max)	1550	1550
Drive current (mA)	10 to 200	10 to 200
Modulation bandwidth (GHz)(max)	1	6
Life (hours)(estimated, not guaranteed)	10^5 to 10^6	10^4 to 10^5
Cost	Lower	Higher

*Power remaining after coupling losses have been taken into account.

4.5.2 **LD's.** The use of LD's is warranted when distance between repeaters, or data rate, preclude the use of LED's. Because of fast rise time, LD's are capable of high modulation rates. They have a narrower spectral linewidth than LED's (see figure 18), therefore, produce less material dispersion within the fiber. However, LD's require an auxiliary high voltage supply for external biasing to achieve the lasing effect. LD's have a shorter life, are temperature-sensitive, and are less stable than LED's. They are best suited for digital transmission. In links in which the LD light source overloads the detector, an attenuator (neutral density filter) can be placed between the light source and the fiber to lessen the light coupled into the fiber, yet still allow the light source to operate within optimum range.

4.5.3 **Drivers.** The driver has these functions:

a. Application of the electrical signal to the light source, with the inclusion of signal conditioning to optimize the optical signal. The interface circuit converts input voltages to values compatible with the emitter drive circuit to operate the light source. Automatic gain control will maintain the light level as the source ages. If the light source power is excessive after other methods of light reduction have been applied, an optical attenuator can be inserted in the light path as a last resort.

b. Temperature compensation to ensure the drive current does not exceed the current capacity of the light source, especially in the case of LD's.

c. Regulation of bias current to protect the light source and optimize its optical response.

4.6 **Receivers.** The receiver package consists of the fiber pigtail or coupler, light detector, opto-electronic circuitry, and pre-amplifier, depicted in a block diagram, figure 19. Positive-intrinsic-negative (PIN) photodiodes and avalanche photodiodes (APD's) are the two types of light detectors used in fiber optic communication systems. The receiver converts received optical power into an electrical signal.

4.6.1 **PIN photodiodes.** PIN photodiodes have a longer life and are less subject to thermal instability than APD's. Peak responsivity is in the 800 to 900 nm and 1300 to 1500 nm range.

Downloaded from http://www.everyspec.com

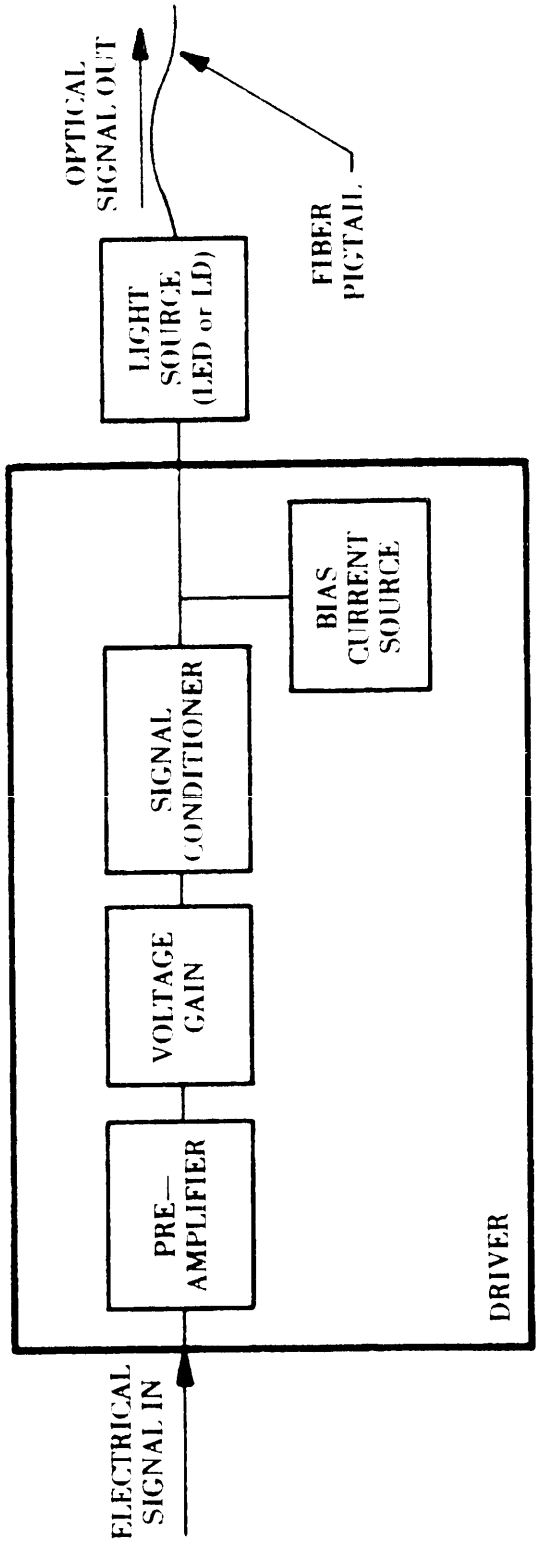

FIGURE 16. Block diagram of a fiber optic transmitter.

Downloaded from http://www.everyspec.com

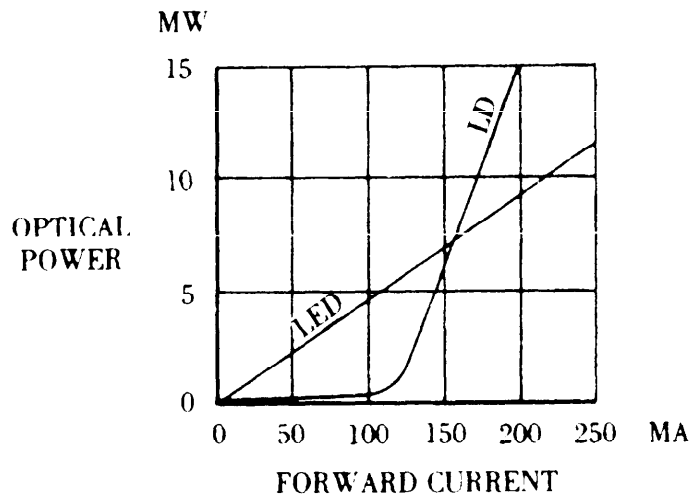

FIGURE 17. Optical power *vs.* drive current for typical light sources.

Downloaded from http://www.everyspec.com

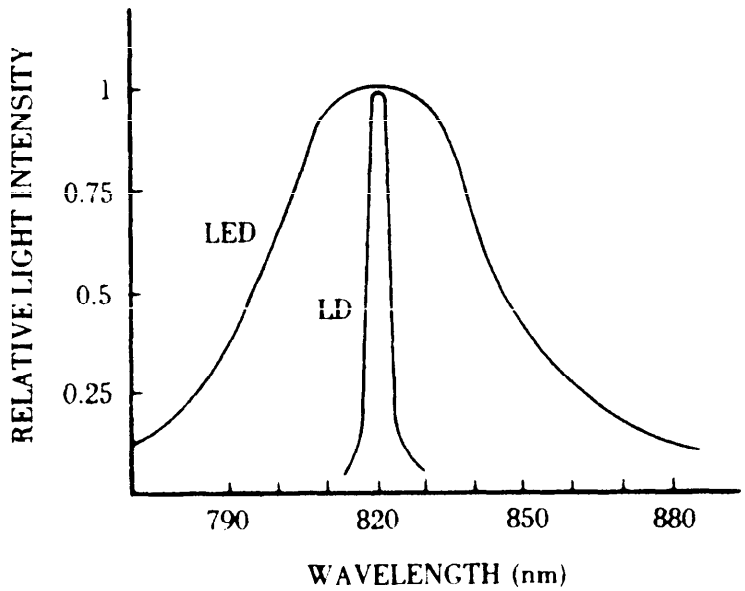

NOTE THAT THE PEAK INTENSITIES HAVE BEEN NORMALIZED TO THE SAME VALUE. THE ACTUAL PEAK INTENSITY OF AN LD IS MUCH GREATER THAN THAT OF AN LED.

FIGURE 18. Typical spectral linewidths for LED and LD.

Downloaded from http://www.everyspec.com

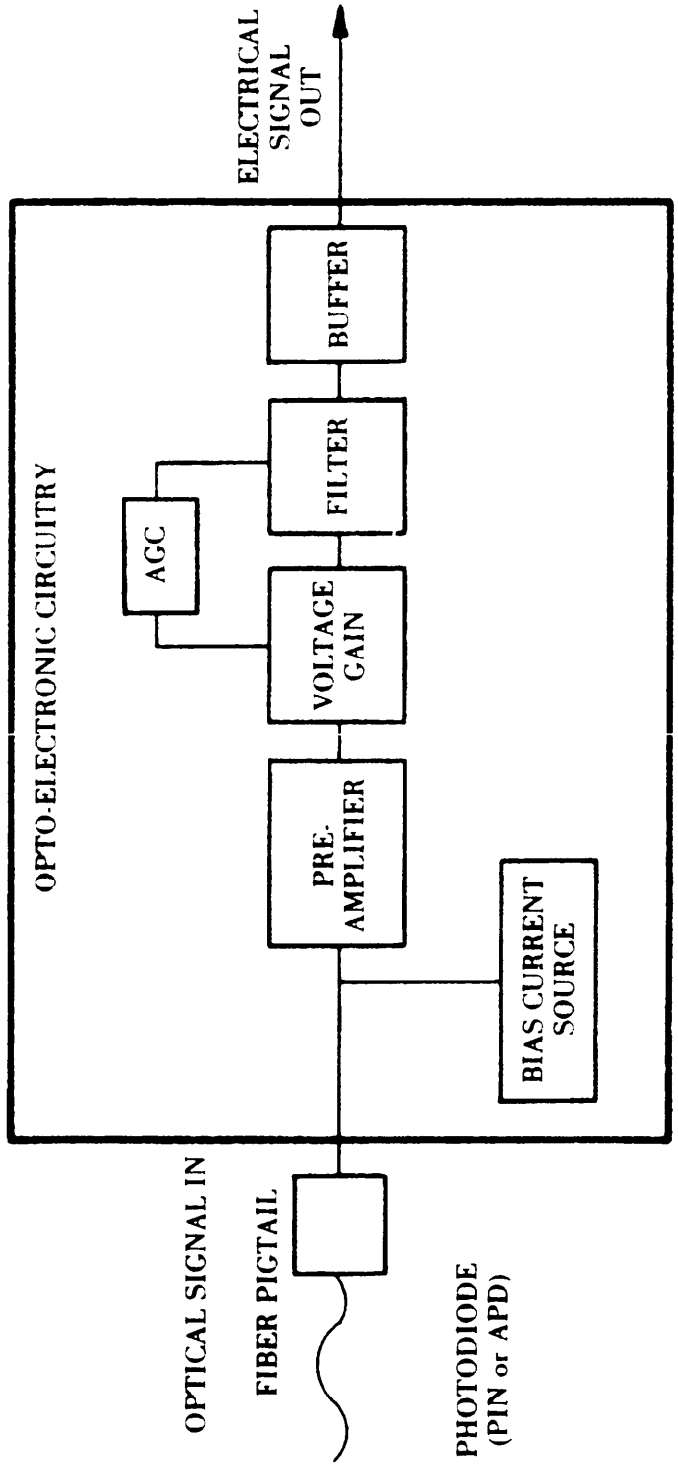

FIGURE 19. Block diagram of a fiber optic receiver.

Downloaded from http://www.everyspec.com

They have a wide dynamic range and good linearity. PIN's have no internal gain, therefore exhibit less sensitivity than APD's. PIN diodes introduce shot noise from photocurrent and leakage current noise. PIN diodes and APD's are compared in table IV. PIN's have a large dynamic range and bandwidths exceeding 1 GHz. There is quantum noise associated with the photodetection process. Thermal noise in the electronic preamplier is the controlling noise of the receiver output.

4.6.2 **APD's.** The APD is capable of internal gain, thus providing a sensitivity approximately 10 dB greater than the PIN, while generating some internal noise. APD's require an external bias voltage. Peak responsivity is in the 800 to 900 nm range, although APD's in the 1300 nm and 1550 nm range are under development. APD's introduce quantum noise (shot noise from multiplied photocurrent), surface leakage noise (shot noise from non-multiplied leakage current), and bulk leakage current noise (shot noise from multiplied leakage current). APD's require temperature-compensation to prevent damage and maintain gain. They are suited to long haul systems and high data rates.

TABLE IV. Comparison of typical PIN photodiodes and APD's.

Characteristic	PIN photodiode	APD
Sensitivity (dBm for BER or SNR)	−30 to −45	−40 to −50
Spectral response range (nm)	200 to 1700	200 to 1700
Noise equivalent power ($W/\sqrt{Hz}$)	$1x10^{-10}$ to $27x10^{-14}$	$1x10^{-14}$
Cost	Lower	Higher

4.6.3 **Noise.** Noise appears at the detector and is due to quantum or photon noise arising in the optical beam itself and thermal noise arising in the resistances associated with the front-end amplifier. Quantum or photon noise is more evident in highly sensitive detectors such as APD's, whereas thermal noise is more evident with such detectors as PIN diodes. An important aspect of the spectral density of thermal noise is that it is quite constant with frequency up to frequencies near 10^{12} Hz. Above this, thermal noise density begins to decline and drops rapidly above 10^{13} Hz, so that, although thermal noise is common at microwave frequencies, it is essentially absent at optical frequencies (above 10^{14} Hz). On the other hand, quantum noise becomes evident in the 10^{12} to 10^{13} range right where thermal noise is dropping off, and increases directly with frequency. Quantum noise becomes altogether dominant at optical frequencies and is sometimes referred to as blue noise because of its spectral density characteristics. Unfortunately, since optical repeatering or detection without conversion to electronic signals is presently impractical, the detector front-end amplifier package will exhibit both types of noise. Manufacturers' information should be consulted regarding receiver thresholds.

4.7 **Repeaters.** Repeaters reshape, retime, and regenerate digital signals by converting optical signals to electrical signals and back to optical signals. (Signal conditioning occurs in the electrical domain. Current technology does not permit such signal conditioning in the optical domain.) In form, a repeater is a receiver back-to-back with a transmitter, with necessary control equipment. Some repeaters also contain diagnostic equipment to transmit alarm status, monitor BER, and provide orderwire functions. To allow for various combinations of emitters and detectors, some repeaters offer the design feature of plug-in modules. Repeaters are usually powered by central office equipment or an auxiliary power feed. Some repeaters are powered by a dedicated power supply and back-up battery (tactical repeaters usually use batteries). Few repeaters are now required in point-to-point digital links, since 15 to 50 km repeater spacings are now possible.

Downloaded from http://www.everyspec.com

4.8 **Orderwire and telemetry channels.** As in other communications systems, individual voice channels are derived for use as engineering and maintenance orderwires. Also, telemetry channels carry system control and status traffic. Orderwires and telemetry channels may simply be multiplexed into the traffic baseband (FDM or PCM-TDM). Maintenance orderwires can also be combined with the communication traffic by a different means of modulation, such as PPM, to provide an independent channel around the traffic multiplex equipment. In some cases, it may be advisable to provide a separate physical channel, such as a separate fiber, metallic pair, or separate cable for orderwire use.

4.9 **Splices.** Splicing of fiber optic cables is addressed in T.O. 31-10-34. Splices must provide precise alignment of the fiber ends when completed. Alignment of the prepared ends may be obtained through the use of an alignment tube, with the fiber ends sealed with epoxy once alignment has been achieved. More positive alignment may be obtained with a V-groove guide or a square tube, so that fibers introduced at a slight angle to the axis of the tube or groove are forced to line up face-to-face. Epoxy is then applied. Sometimes an index-matching fluid is added to minimize Fresnel reflection and scattering loss. An alternate method is the use of fusion splicing. The fiber ends are aligned by manipulation under a microscope or by monitoring optical throughputs, and the ends then fused by electric arc or other source of heat. The preferred splicing method has not been determined at this time. Maximum allowable splice loss is 0.5 dB, as standardized in MIL-STD-188-111.

4.9.1 **Fiber joining methods.** Accurate alignment for low-loss connections is one of the most important design aspects of a fiber optics link. Several alignment methods are described below.

4.9.2 **Grooved-plate, multifiber splice.** Suitable for multiple fibers packaged in flat-ribbon configuration. A stack of grooved chips (figure 20) is assembled to clamp the fibers in parallel, joining identically sized fibers. An index-matching adhesive is applied.

4.9.3 **Multirod alignment splice.** Three rods of the correct size act as splints to maintain alignment. Figure 21 shows the use of heat-shrink tubing to lightly load the assembly. An index-matching adhesive is introduced in the splice.

4.9.4 **Fusion splice.** A low-loss splice can be made under a microscope with micropositioners to exactly align the fiber ends. The fiber ends are then fused with an electric arc rather than with UV-cured or self-curing epoxy to join the fibers.

> NOTE: The fusion splicing device, which uses an electric arc, should not be used in a manhole where combustible gases may exist.

4.9.5 **Elastomer splice.** The splice consists of two center inserts and an outer elastic sleeve. One of the inserts has a V-groove, the other is a flat plate (figure 22). Together they form a triangular cross section to position both fiber ends. The inserts deform slightly under pressure from the sleeve and the inserted fiber expands the triangular hole, creating forces that hold and align the fiber. An index-matching fluid or gel is pre-inserted into the triangular hole.

4.10 **Connectors.** The purpose of connectors is to join fiber ends for efficient signal transfer. Connectors are designed to be connected and reconnected. Permissible losses in connectors are 1.5 dB for long haul systems and 2.5 dB for tactical systems (MIL-STD-188-111, Optical Connector Attenuation). Connectors should be replaceable and interchangeable throughout a

Downloaded from http://www.everyspec.com

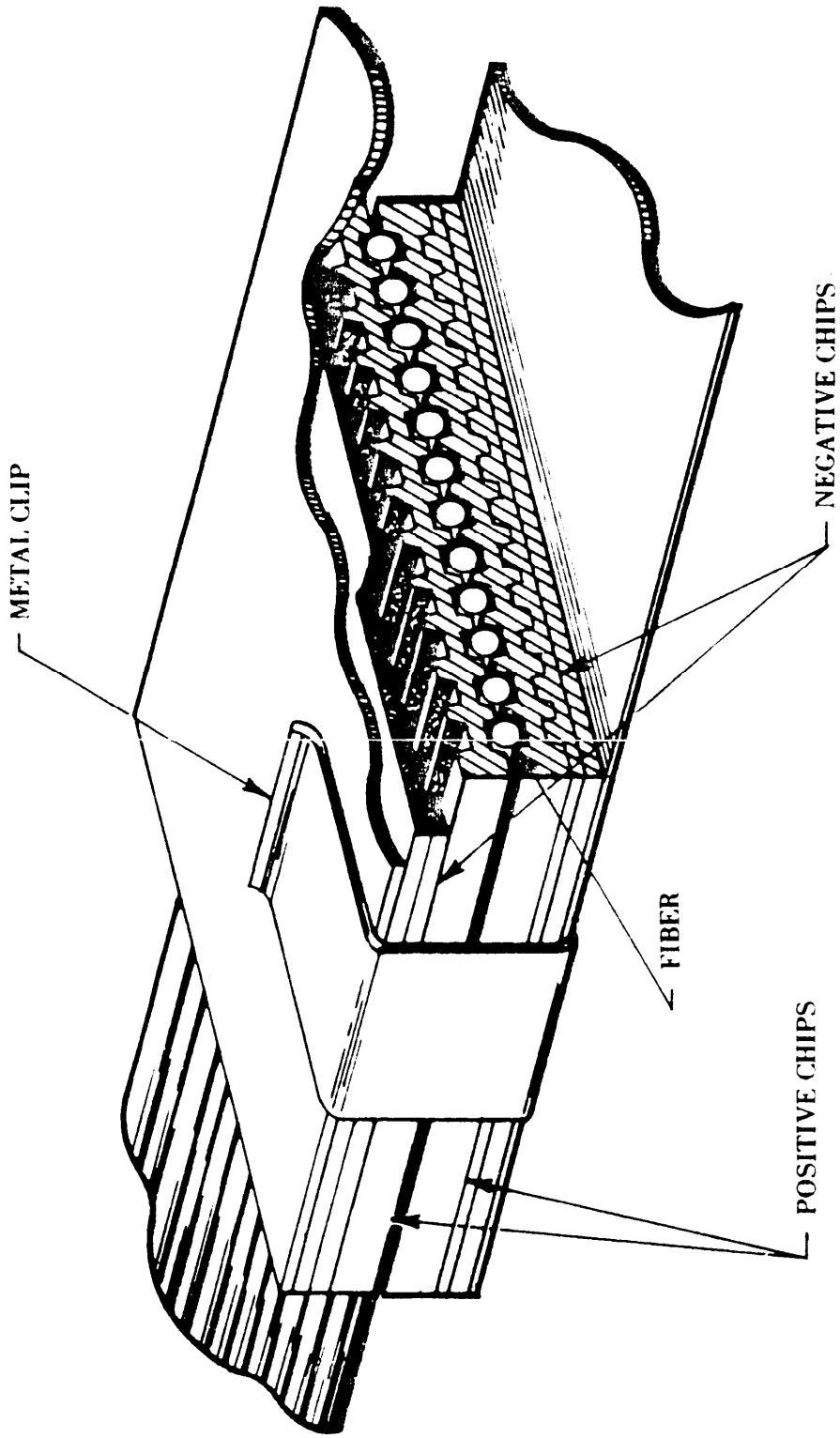

FIGURE 20. Grooved plate multifiber splice.

Downloaded from http://www.everyspec.com

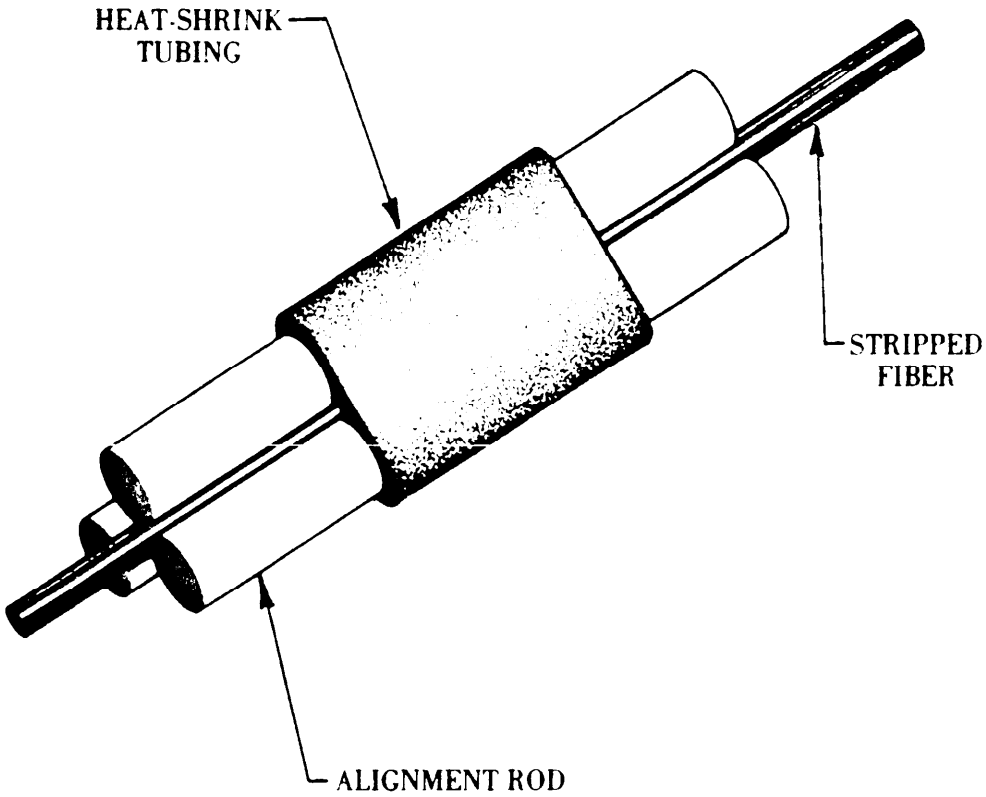

FIGURE 21. Multirod alignment splice.

Downloaded from http://www.everyspec.com

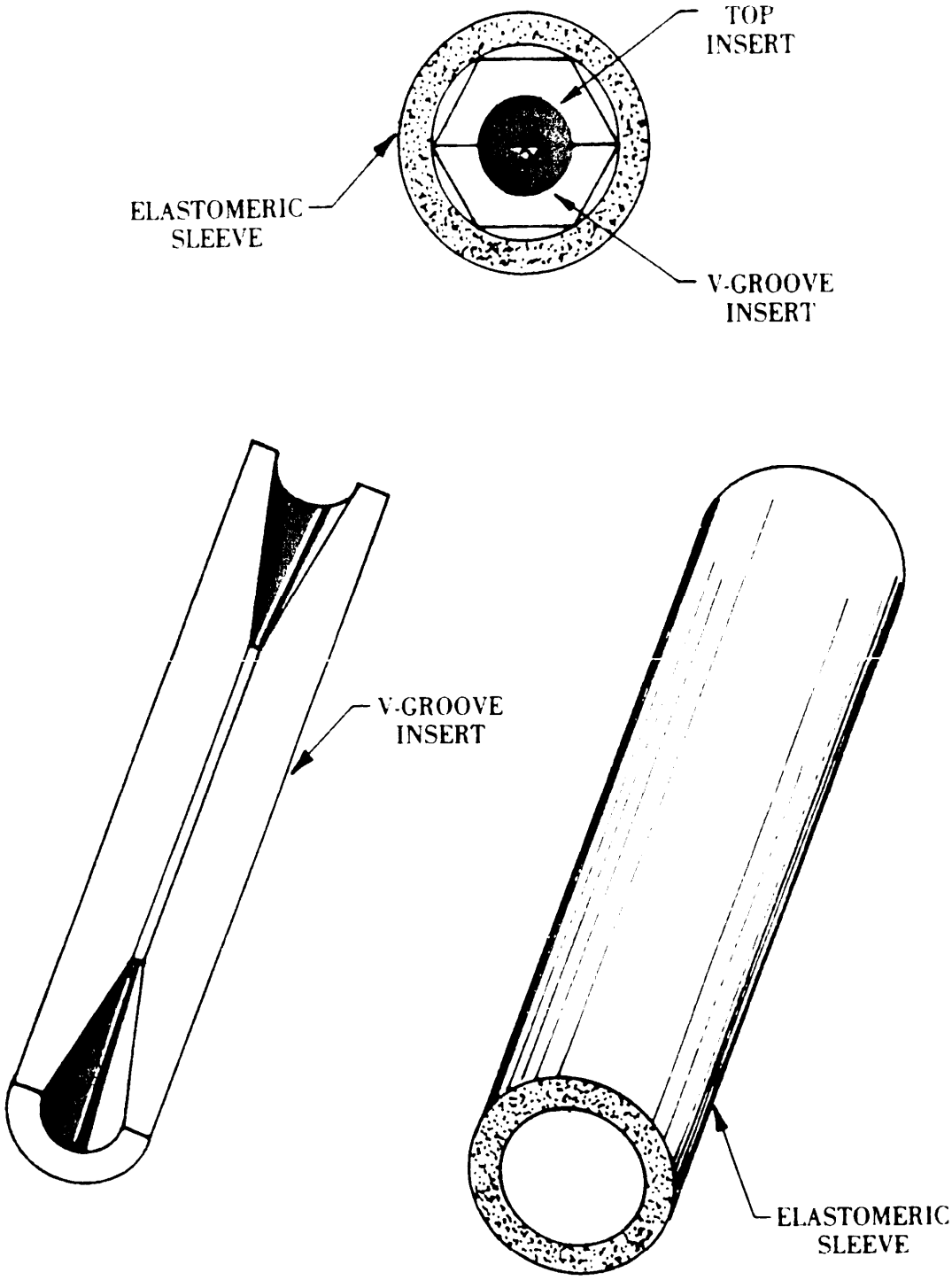

FIGURE 22. Elastomer splice.

Downloaded from http://www.everyspec.com

given system. Thus, identical connectors or interchangeable connectors should be specified for the total installation. Connectors are either lens- or butt-coupled. Some butt-coupled connecters use index-matching fluid to reduce loss; others rely on optical contact. Optical fiber connectors are addressed in T.O. 13-10-34. Precise alignment of the fiber ends is achieved by the following methods.

4.10.1 **Tubular channel connector.** A tubular guide is used to maintain alignment. One connector of the mating pair contains the guide while the other exposes a length of fiber. This length enters a funnel-shaped opening which guides the fiber into the alignment channel and seats the fiber ends together when the connectors are mated. An index-matching fluid is used to minimize loss in the fiber separation gap. See figure 23.

4.10.2 **Ferrule connector.** This connector consists of two male ferrules joined, aligned, and correctly spaced by their coupler to a common "uniter". The uniter may be used free, or in a bulkhead assembly. Fibers are potted into their ferrules before mating. See figure 24.

4.10.3 **V-groove connector.** The V-groove connector is similar to the grooved-plate splice. A carrier base with a precision V-groove supports the fiber and a clamping plate is adjusted for correct clamping pressure. See figure 25.

4.10.4 **Three-sphere connector.** Three spring-loaded spheres in an open spherical race center the fiber within a ferrule. By applying the loading with a spring, a variation in fiber diameters may be accommodated. When the connector is mated under spring loading, three spheres from one assembly are pressed into the spaces between the spheres of the other assembly (figure 26). A small, precise gap remains between the fibers after mating. Correct angular and lateral alignment of the fiber ends are maintained with adhesive in the ferrule.

4.10.5 **Biconical connector.** This connector has female conical openings in each end. Two precision mating male plugs hold the fiber ends in exact alignment when inserted into the ends of the sleeve (figure 27). A small controlled gap between the fiber ends is filled with index-matching fluid.

4.10.6 **Jeweled ferrule connector.** The optical fibers are held by precision jewel bearings and potted into metal barrels (figure 28). The two barrels are pressed together through opposite ends of a concentric sleeve.

4.10.7 **Curved or elbow channel connector.** The fiber ends are guided within the cavity formed by three or four rods. The curvature or bend in the channel forces the fiber ends against the corner, essentially a V-groove, formed by two rods. A single bend or curve, however, introduces angular misalignment. To overcome this, a straight section was added to the connector (figure 29) to allow the fibers to become parallel.

4.10.8 **Collimating lens connector.** To overcome tight tolerances inherent in connecting optical fibers, lenses are used to collimate and focus the light beam. One collimating lens renders parallel the light from the transmitting fiber while the other lens refocuses the light onto the receiving fiber. The spherical lens connector uses positive lenses in the form of spheres to collimate the beam (figure 30A). Using a combination of high-index transparent gel and a negative lens, the gel-lens connector collimates the light beam by forming, in effect, a positive gel lens between each fiber end and the negative lens (figure 30B). In both collimating designs, a greater separation of fiber ends is allowed than in connectors using just index-matching fluid, but angular alignment remains critical, and end-separation tolerance may remain critical.

Downloaded from http://www.everyspec.com

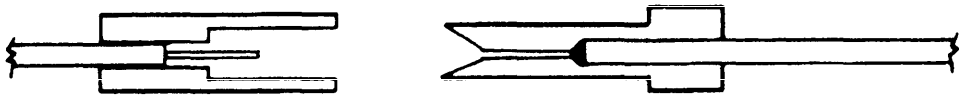

FIGURE 23. Tubular channel connector.

Downloaded from http://www.everyspec.com

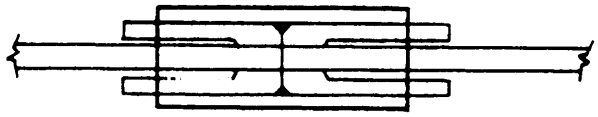

FIGURE 24. Ferrule connector.

Downloaded from http://www.everyspec.com

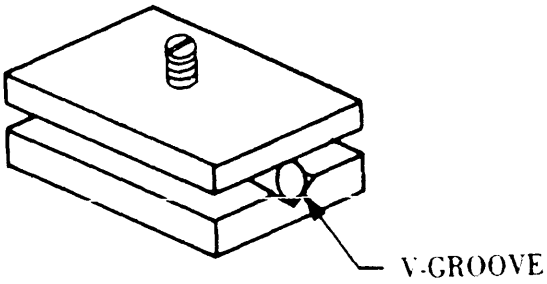

FIGURE 25. V-groove connector.

Downloaded from http://www.everyspec.com

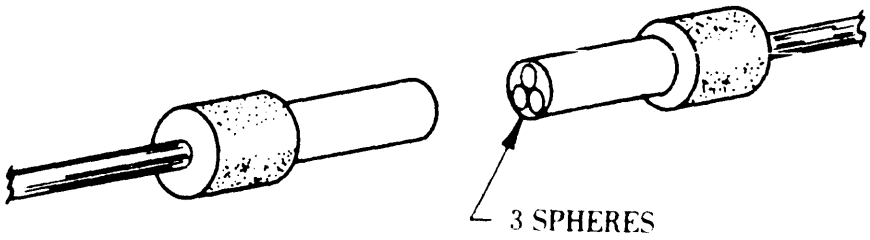

FIGURE 26. Three-sphere connector.

Downloaded from http://www.everyspec.com

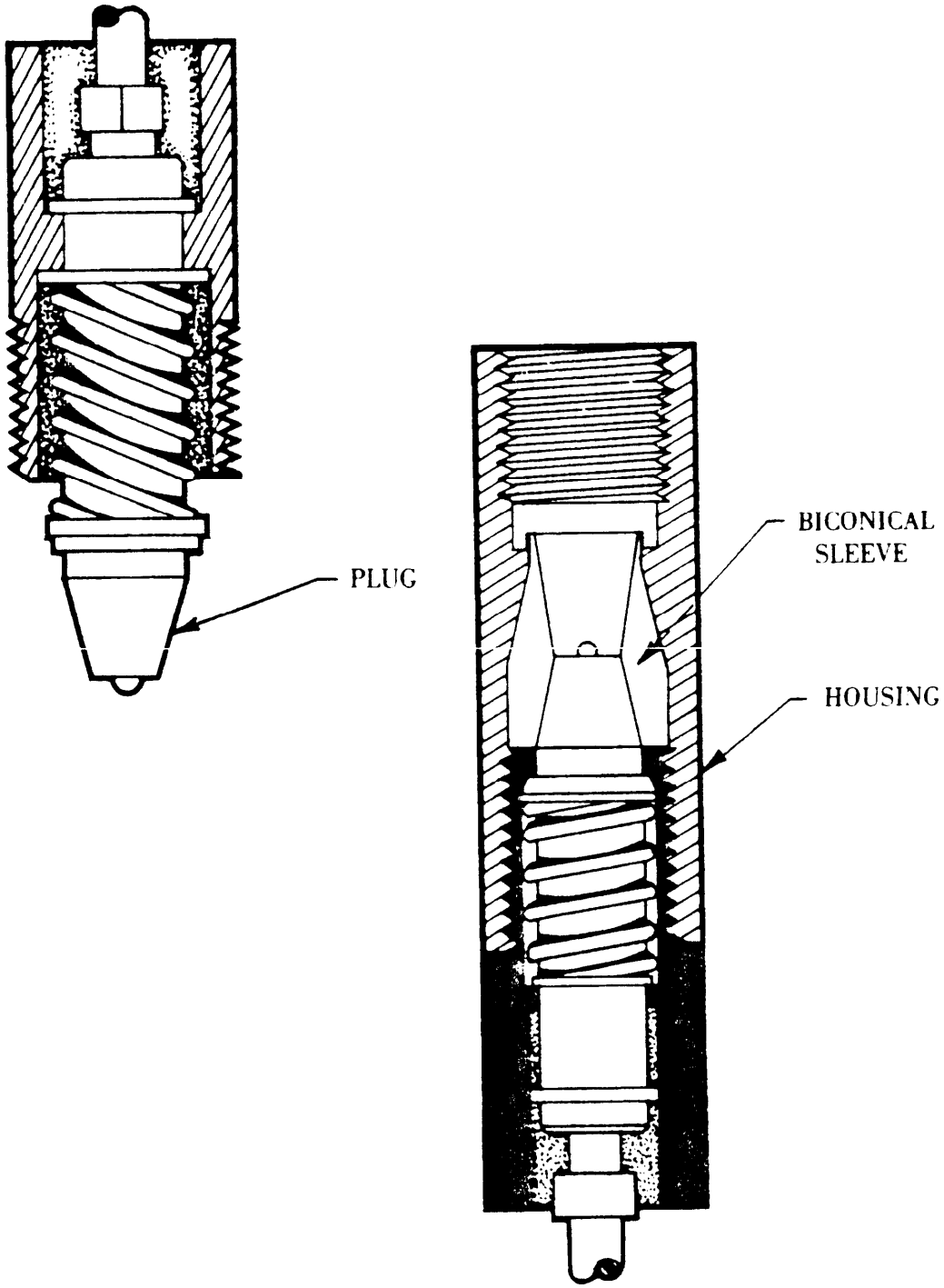

FIGURE 27. Biconical connector.

Downloaded from http://www.everyspec.com

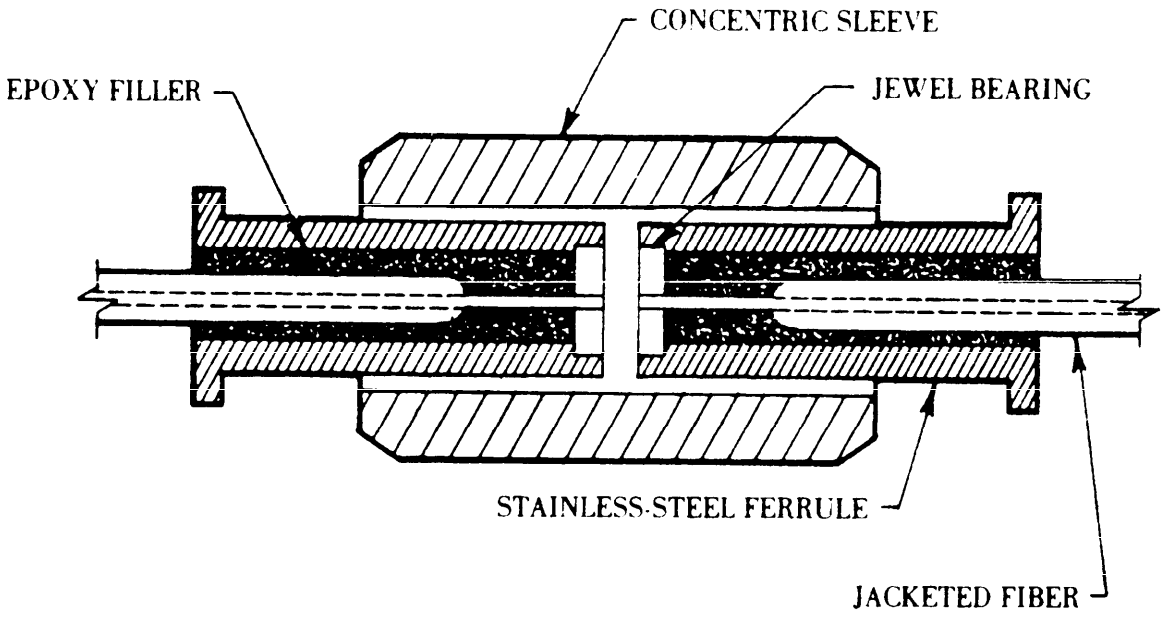

FIGURE 28. Jeweled-ferrule connector.

Downloaded from http://www.everyspec.com

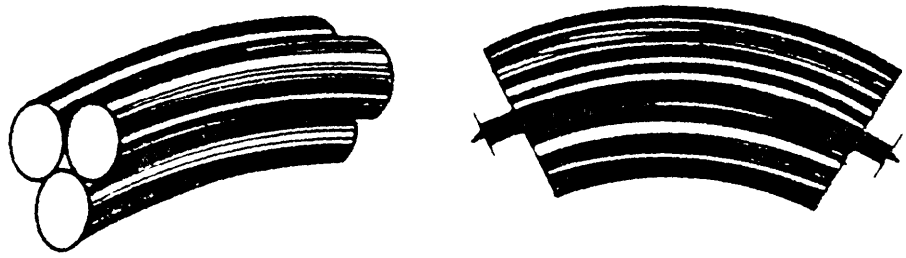

CURVED 3 ROD

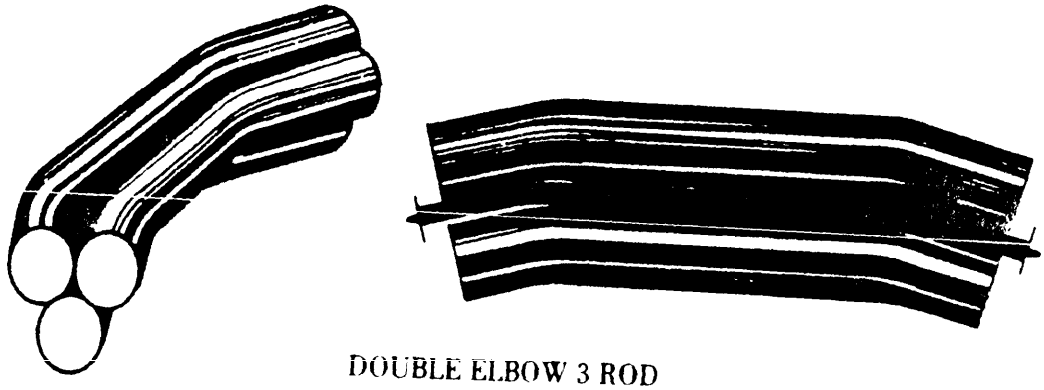

DOUBLE ELBOW 3 ROD

DOUBLE ELBOW 4 ROD

FIGURE 29. Elbow-channel connectors.

Downloaded from http://www.everyspec.com

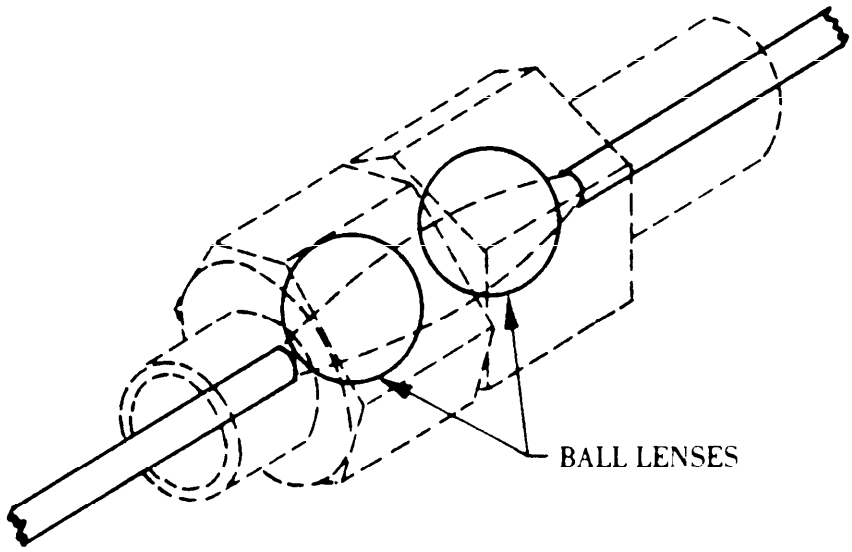

A. SPHERICAL LENS

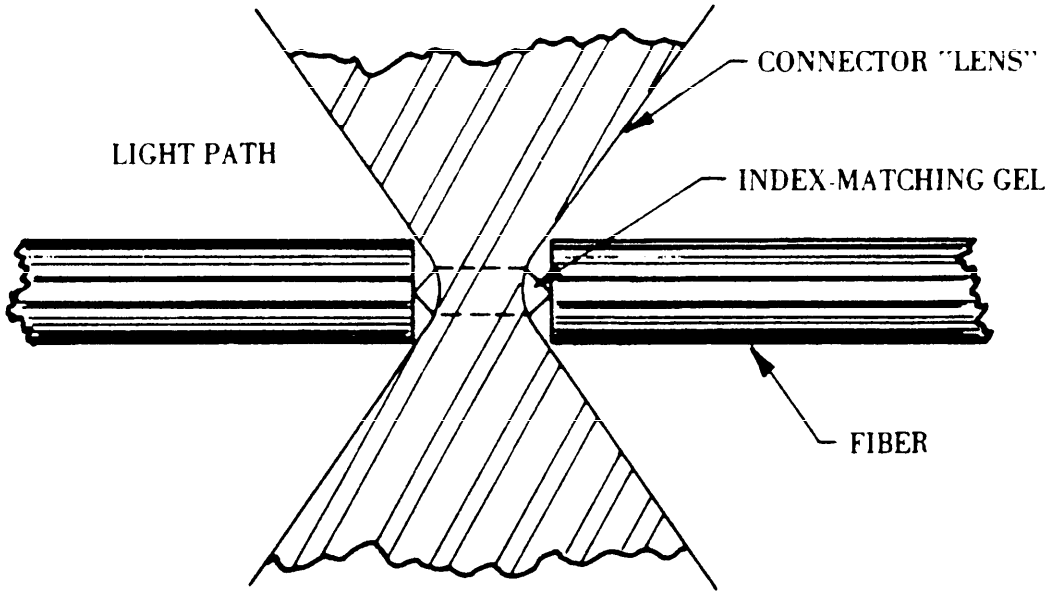

B. POSITIVE GEL LENS

FIGURE 30. Collimating-lens connectors.

Downloaded from http://www.everyspec.com

4.10.9 **Crimp connector.** A crimped metal sleeve grips the cable strength member to the connector body, and immobilizes the fiber. The fiber is aligned by means of a resilient sleeve or potted into the connector body. See figure 31.

4.10.10 **Double-eccentric connector.** Fibers are mounted in two rotatable sleeves, each with the hole drilled off-center. Rotating these eccentrics allows some degree of freedom in adjustment of fiber core alignment. Alignment must be readjusted each time the connector is remated. See figure 32.

4.10.11 **Single-mode connector.** Alignment of small (2 to 8 μm) cores in single-mode fibers is very critical because loss from lateral misalignment is as much as five times greater than in the case of the larger multimode cores. The most common single-mode connector uses lenses to collimate and focus the light beam.

4.10.12 **Connector-induced losses.** Connector-induced losses can be classified into two broad categories: Fresnel loss and mechanical loss.

4.10.12.1 **Fresnel loss.** Fresnel loss (reflection) is inherent in any cleaved or cut surface of the optical fiber. A loss of 0.4 dB is expected in a "dry" connection, and a loss of 0.25 dB in a connection using index-matching fluid.

4.10.12.2 **Mechanical losses.** Mechanical losses are a function of positioning errors within a connection. The most serious are lateral misalignment (figure 33A) and fiber end separation (figure 33B). A lateral displacement of 10 percent between cores can account for a loss of 0.59 dB. Separation between the ends of the fibers can result in losses as high as 1 dB for separation of a distance of 1/10 the core diameter. Separation loss can be lessened by use of index-matching fluid or lenses. Angular misalignment, (figure 33C) in which the cores of the fiber meet at an angle rather than along a straight line, can contribute 0.2 dB loss for a 2 degree angle between fiber centerlines. The above losses all contribute to a cumulative loss for connections. Again, permissable loss for connectors is given in MIL-STD-188-111 as 1.5 dB for long haul systems and 2.5 dB for tactical systems.

4.10.12.3 **Methods of lessening fiber end loss.** Proper connector function requires that the light emitted from one fiber is coupled efficiently into the other. If the end of a fiber is not flat and perpendicular to the fiber axis, the light will deviate from the proper path. An index-matching fluid will reduce this deviation, and will also reduce Fresnel reflections. When the connector introduces a large fiber end separation, precisely positioned lenses can be used to simulate physical contact between the fiber ends.

4.10.12.4 **Fiber end preparation.** Fiber ends are prepared by two basic methods: scribe-and-cleave or grinding and polishing. The quick scribe-and-cleave method, which sometimes renders a less than optically perfect finish, is adequate for connectors using an index-matching fluid and for splices. The grinding and polishing method, which takes 5 to 10 minutes, ensures the fiber ends are ground flat and perpendicular to the fiber axis for use in connectors without index-matching fluids.

4.11 **Couplers.** Couplers are passive optical components that enable the user to tap or inject optical energy from the main transmission line for multiple point-to-point signal transfer. (Couplers are distinguished from connectors by having more than two ports.) Couplers perform three discrete functions: data busing, optical wavelength division multiplexing, and monitoring

Downloaded from http://www.everyspec.com

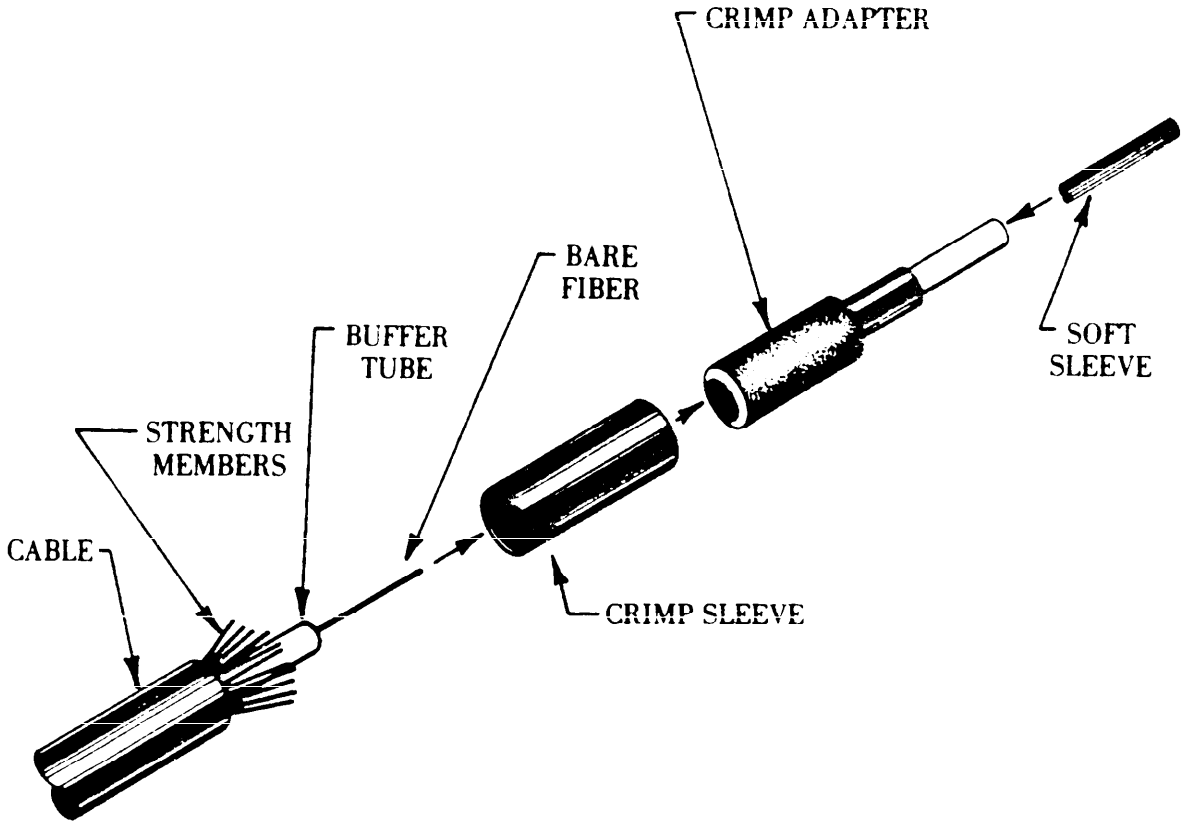

FIGURE 31. Crimp connector.

Downloaded from http://www.everyspec.com

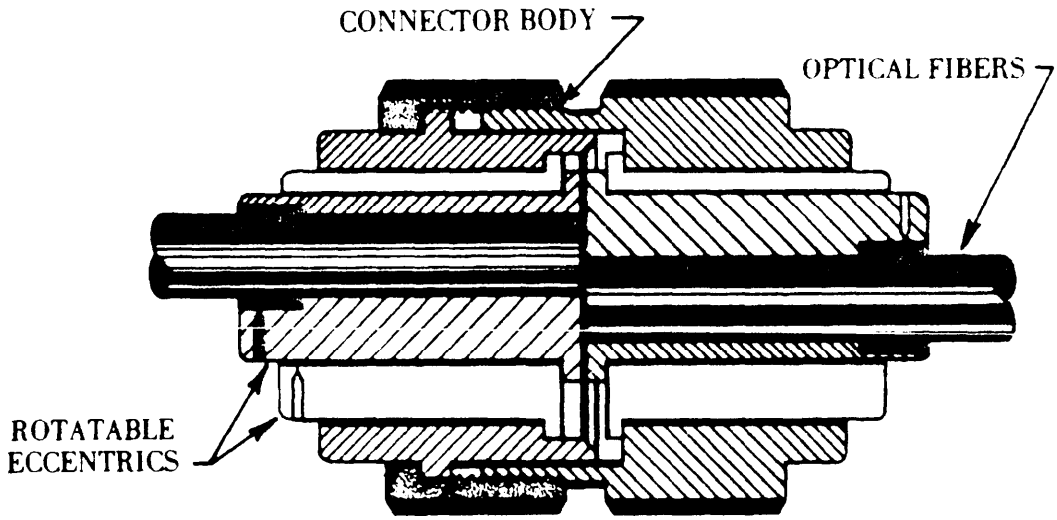

FIGURE 32. Double-eccentric connector.

Downloaded from http://www.everyspec.com

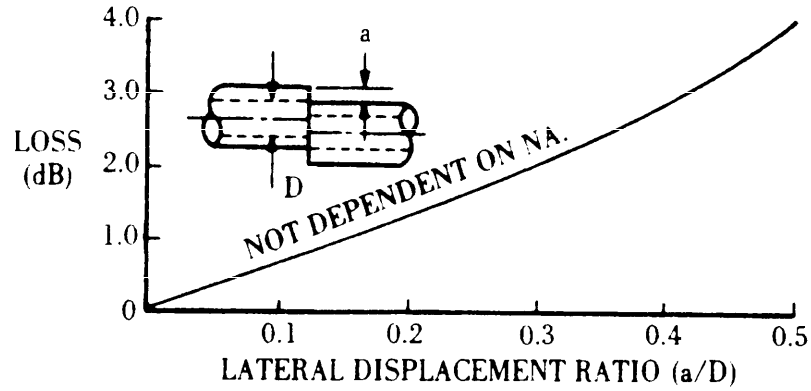

A. LOSS DUE TO LATERAL MISALIGNMENT

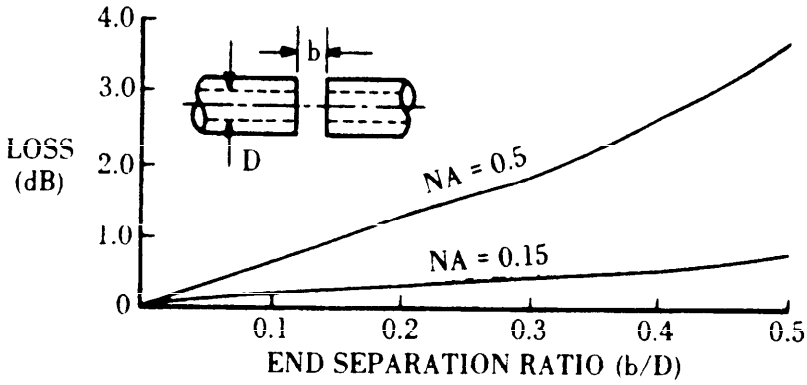

B. LOSS DUE TO END SEPARATION

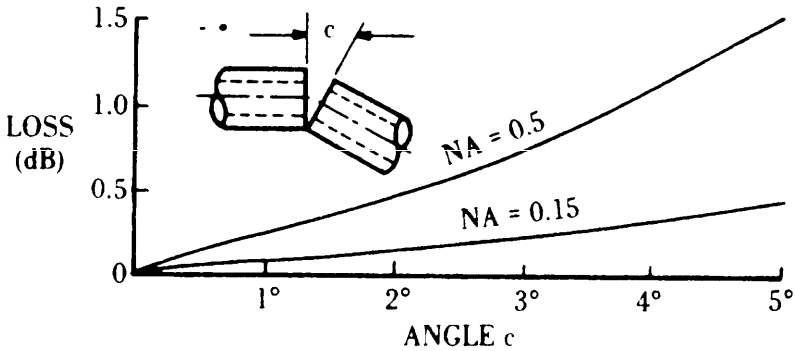

C. LOSS DUE TO ANGULAR MISALIGNMENT

FIGURE 33. Mechanical losses in fiber optic connectors.

Downloaded from http://www.everyspec.com

system status. Couplers provide such capabilities as duplexing, directional coupling, splitting, and mixing optical signals. They perform the signal tapping and distribution function in LAN's where a large number of terminals in a limited geographic area use common channels. The coupler must be transparent to the wavelength of the signals. Losses introduced by couplers include splitting loss, excess loss (light radiated or absorbed by the coupler) and packing fraction loss. Access to the coupler is by pigtails (usually 50 centimeters long) or by connectors. The signal processing geometry suggests classifying couplers as either T or star couplers.

4.11.1 **T couplers.** T couplers (also called in-line data bus couplers) are three-port devices for tapping into a main bus. T couplers are used in duplexing, data busing wavelength-division multiplexing, monitoring system status, and stabilizing feedback. Typically, this coupler has a splitting loss of 3 dB and excess loss between 1 and 2 dB. However, because losses introduced by T couplers in series must be added, the maximum number of nodes using T couplers is about 10. Optical power levels must be within the dynamic range of all receivers in the network. Three basic approaches to tapping light from the main bus are used: beam splitting, bifurcation, and evanescent wave coupling.

4.11.1.1 **Beam splitting.** Beam splitters use a partially reflective plate which transmits some of the light and reflects some of the light, depending on wavelength. See figure 34A. A partially reflective coating applied to the polished fiber ends, with index-matching fluid in the gap, can have the same function as the plate. The strength of the tapped signal can be varied by varying the transmission-reflection ratio of the beam splitter. If the mirror is coated to filter selective wavelengths, beam splitters can be used as wavelength division multiplexers/demultiplexers. Couplers used this way are called dichroic couplers. Terminals in bus and ring LAN's often use dichroic couplers to tap specific signals from the main distribution line of the LAN.

4.11.1.2 **Bifurcation.** The word bifurcate means to split into two branches. Like beam splitters, bifurcators distribute incoming signals along new paths. But where beam splitters act directly on beams of light, bifurcators function by regrouping and redirecting bundles of fibers, as in figure 34B. (A bundle is a group of unbuffered fibers used as a single transmission channel.) The mixing rods shown in the figure serve to distribute incoming signals among all output fibers.

4.11.1.3 **Evanescent wave coupling.** A tap fiber is fused to the main bus so that the cores have a common cladding region; therefore high order modes are coupled into the tapping fiber. The amount of light coupled varies with the tap length and core-to-core proximity. See figure 34C.

4.11.2 **Star couplers.** Star couplers allow light from one fiber to be distributed equally into several fibers. The advantage of star couplers over T couplers is that the former theoretically introduce only a single coupling loss. In star couplers, splitting loss increases only logarithmically with the number of output ports. Star couplers are the basic element of star LAN's.

4.11.2.1 **Transmissive star coupler.** In a transmissive star coupler (figure 35A), the outgoing ports are arranged opposite incoming ports. A common way of creating a transmissive star coupler is with the biconical taper coupler, which is similar to the evanscent wave T coupler. The desired number of fibers are lightly twisted and fused so they share a common cladding and their cores are in close proximity. The fused section functions as a mixing rod.

4.11.2.2 **Reflective star coupler.** Each fiber in a reflective star coupler (figure 35B) serves as an output path. The rear end face of the mixing rod is a mirror, with all fibers coupled to the same

Downloaded from http://www.everyspec.com

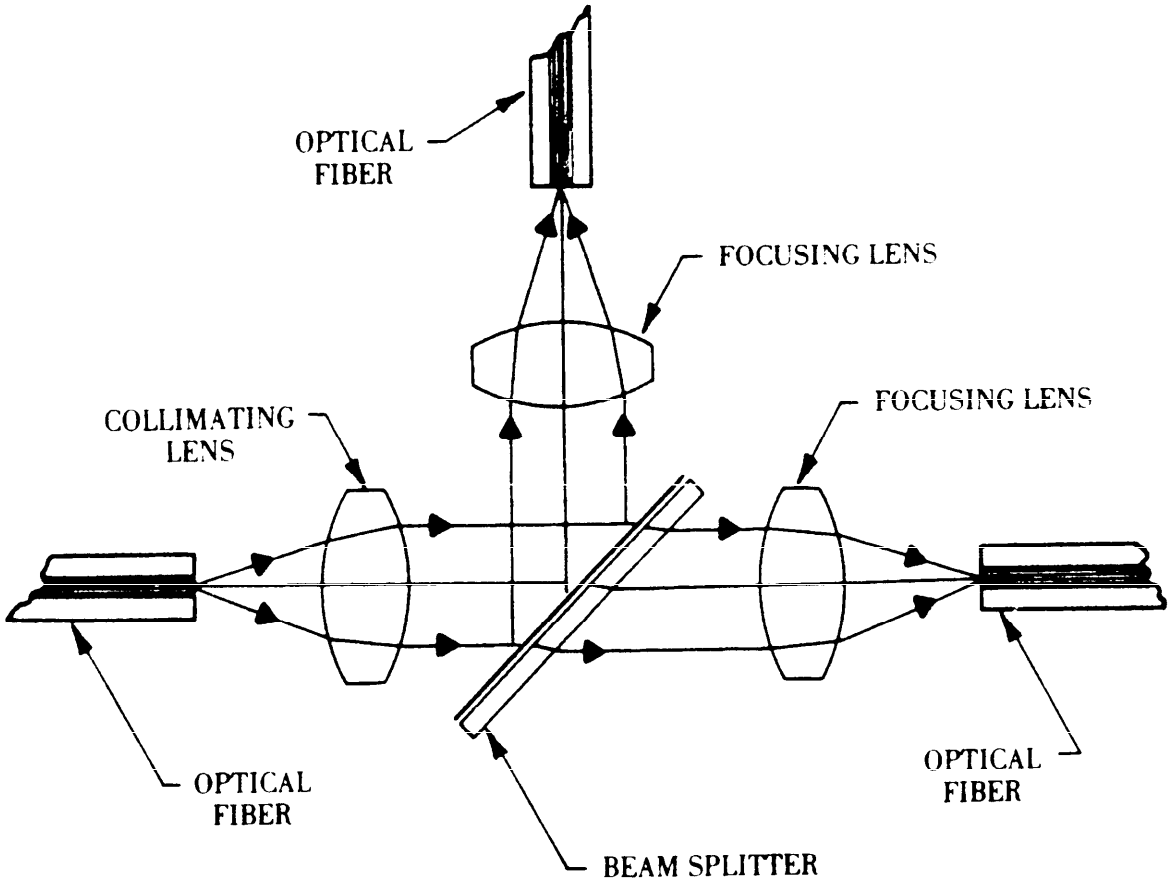

FIGURE 34A. T Coupler (beam splitter).

Downloaded from http://www.everyspec.com

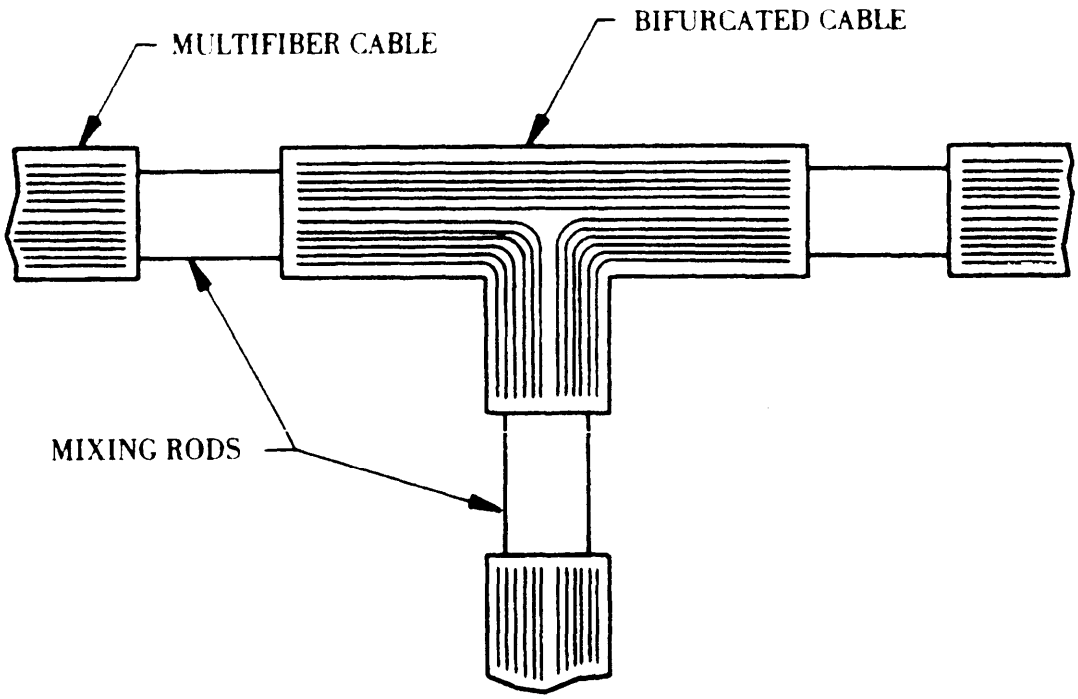

FIGURE 34B. T Coupler (bifurcated cable).

Downloaded from http://www.everyspec.com

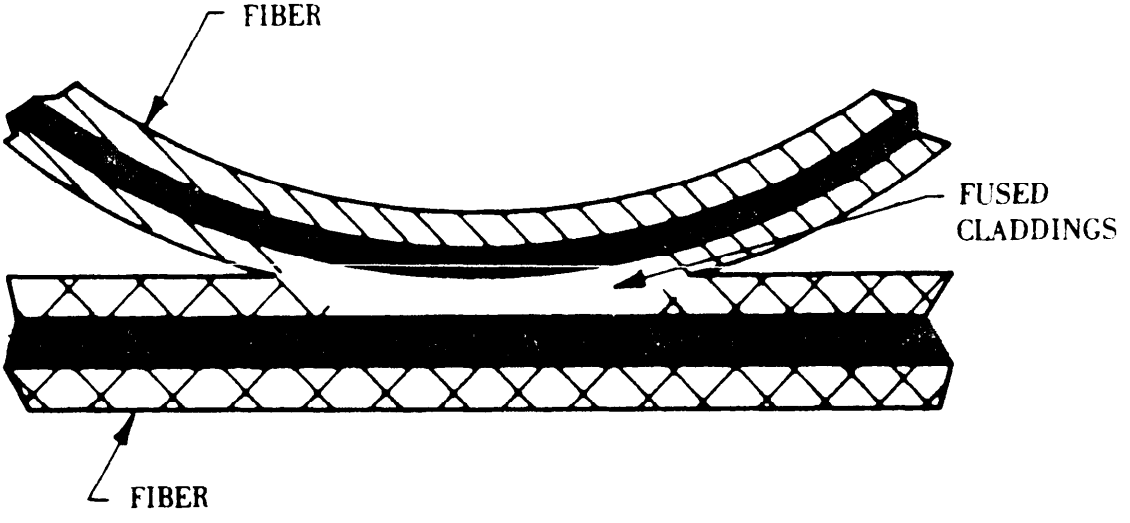

NOTE: Although its physical appearance is that of a 4-port coupler, this coupler functions as a T coupler: an input at one port exits only the farthest two.

FIGURE 34C. T Coupler (evanescent wave coupler).

Downloaded from http://www.everyspec.com

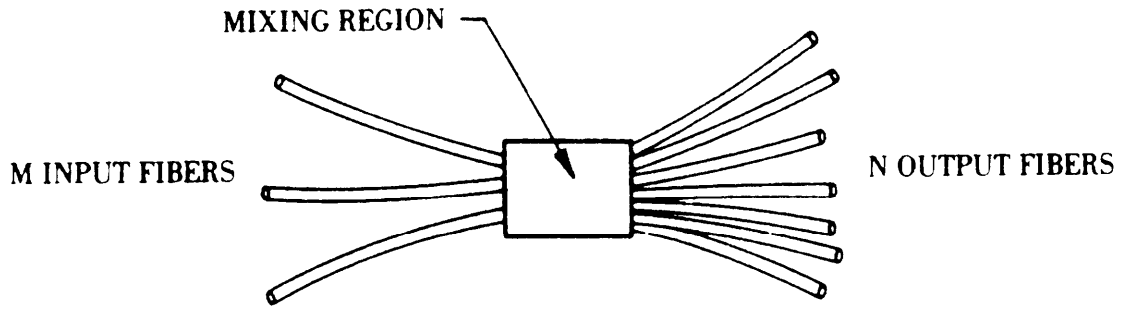

A. TRANSMISSIVE COUPLER

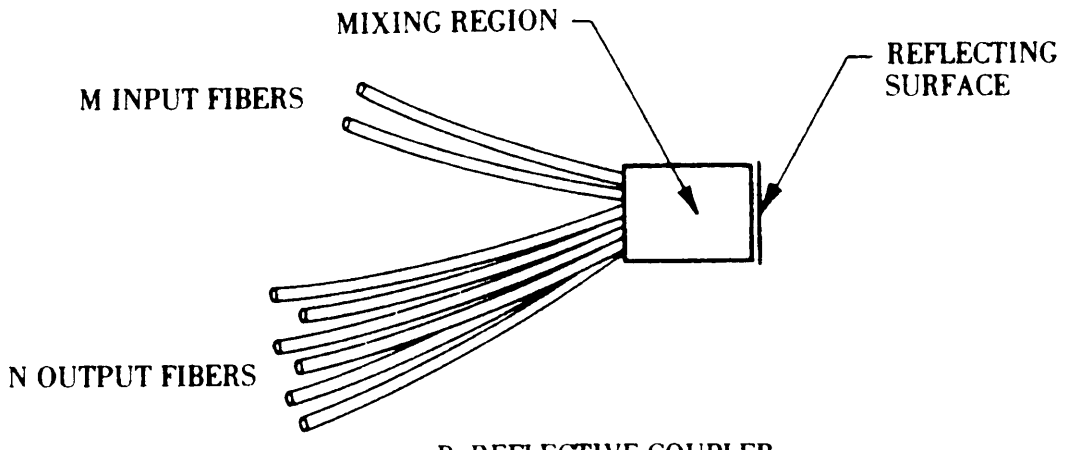

B. REFLECTIVE COUPLER

FIGURE 35. Star couplers.

Downloaded from http://www.everyspec.com

side of the mixing rod. A biconical taper coupler (paragraph 4.11.2.1) will function as a reflective coupler if the fibers are bent to form a closed loop before being fused.

4.11.2.3 **Splitter-combiner.** Although classified separately by some manufacturers, the splitter-combiner performs the same functions as a transmissive star coupler. A splitter-combiner consists of a fiber bundle split into the required number of branches, with the fiber ends packed together in a resilient ferrule and connected directly to a single optical "window" (a source, detector, another fiber). Splitter-combiners typically suffer packing fraction loss, caused by mismatches in area between the radiating surface and the illuminated surface. The packing fraction is the ratio of total active core area in a bundle to the total cross-sectional area within the perimeter of the bundle.

4.12 **Modulation and coding.** Digital, rather than analog, modulation is better suited to most fiber optic transmission systems because of the relatively non-linear characteristics of fiber optic components. Both analog and digital modulation are accomplished by intensity modulation of the light source. For analog modulation, the intensity varies over a continuous range; for digital, it is pulsed at discrete levels. In long haul systems, PCM-TDM is used for transmission of multiple voice and video channels, as well as for data transmission, although PCM-TDM requires greater bandwidth than FDM. (Conventional metallic cable practice uses FDM for transmission of multiple analog signals.) In short haul and tactical systems, wider latitude of modulation choices is permitted because of less stringent requirements over short distances. Therefore, analog modulation (achieved by using the original signal or subcarrier to vary light source intensity) may be used for tactical and fixed base communications.

4.12.1 **Digital signals.** Digital signals offer an improvement in performance over analog signals since the nonlinearity of the optical source is no longer important — only two or three discrete signal levels need be accurately reproduced. After detection at the regenerative repeater, regenerated/retimed signals can be retransmitted in their original form with only moderate distortion, whereas an analog signal suffers cumulative noise and jitter for each added link.

4.12.1.1 **Polarity.** Signal polarity is a characteristic that describes voltage and current variations in the electronic equipment associated with fiber optic links (optical signals have no measurable voltage or current). This text discusses only bipolar signals (as opposed to unipolar signals). Bipolar signals have two non-zero polarities, and are usually symmetrical about the zero axis (this definition encompasses what some texts call polar signals).

4.12.1.2 **Coding.** Digital signals are also classified according to whether the line signal state returns to or maintains the zero level during each bit interval, or uses polarity changes to signify a designated logic element. This is referred to as "coding." Signal codes most commonly used in fiber optic communication systems are illustrated in figure 36.

4.12.1.2.1 **Nonreturn-to-zero (NRZ) bipolar.** A logic "1" is represented by a negative voltage, while a logic "0" is represented by a positive voltage, as shown in figure 36. Each signal pulse occupies a full bit interval. This format is the simplest to generate and decode and requires the lowest bandwidth of the digital coding formats, but it is not self-clocking.

4.12.1.2.2 **Return-to-zero (RZ) bipolar.** During each bit interval, the line signal state returns to the zero level. A logic "1" is represented by a negative voltage in the line signal state; a logic "0" is represented by a positive voltage. RZ coding requires at least twice the bandwidth of NRZ coding; some RZ formats are self-clocking. See figure 36.

Downloaded from http://www.everyspec.com

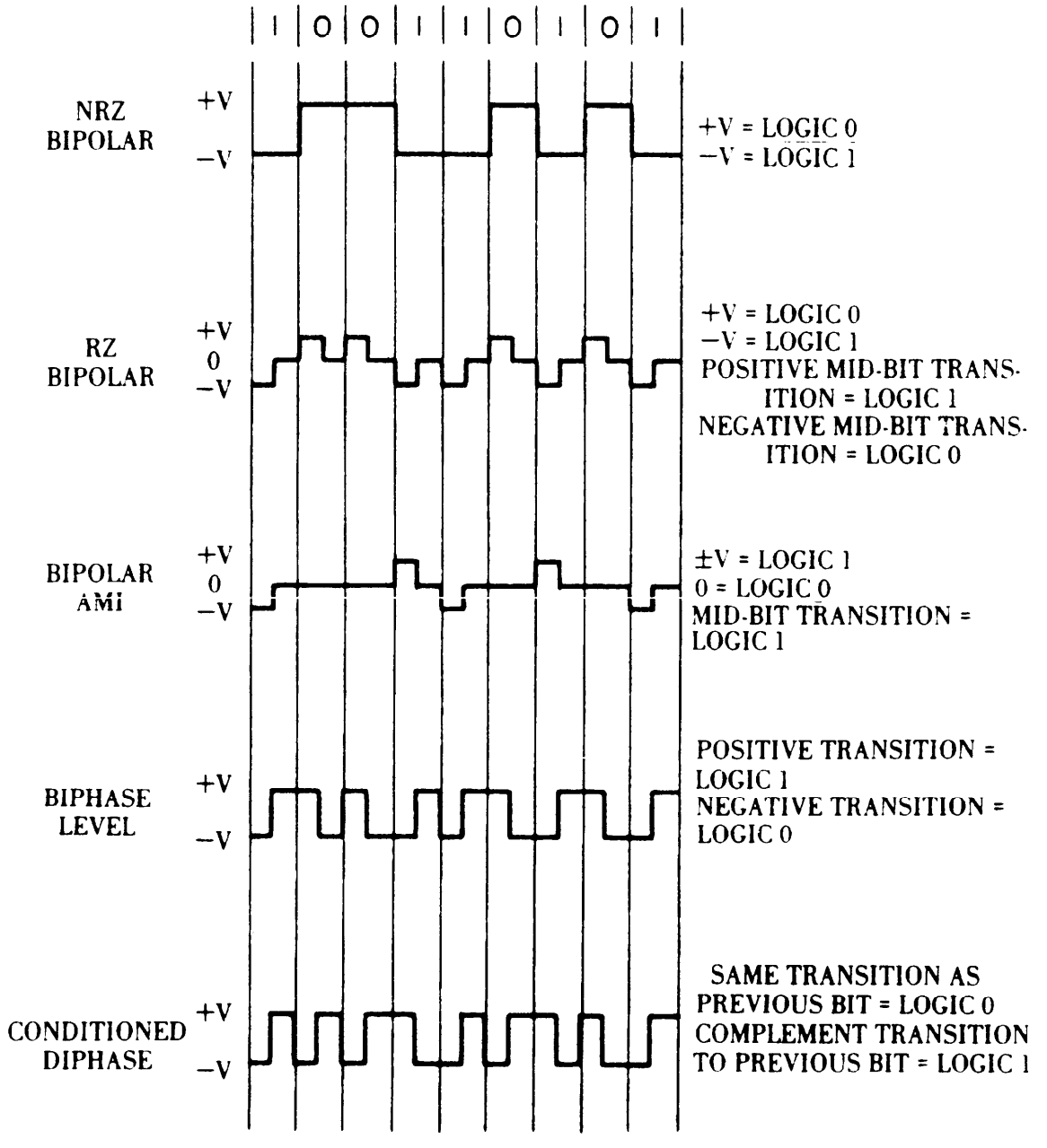

FIGURE 36. Digital coding.

Downloaded from http://www.everyspec.com

4.12.1.2.3 **Bipolar alternate mark inverted (AMI).** Bipolar AMI is a non-self-clocking code. It has effectively three levels. A "1" is represented by a mid-bit transition, while a "0" is represented by the absence of a transition, as illustrated in figure 36.

4.12.1.2.4 **Biphase level.** Biphase level is a type of phase encoding in which there is a transition in state during each bit interval. It is a self-clocking code. A "1" is represented by a positive transition ("0"-"1" sequence) during the bit interval, while a "0" is represented by a negative transition ("1"-"0" sequence). The code is illustrated in figure 36.

4.12.1.2.5 **Conditioned diphase.** Conditioned diphase is generated by diphase modulation of a conditioned baseband sequence. It is represented in figure 36.

4.12.1.2.5.1 **Signal conditioning.** Conditioning involves encoding the data to be transmitted in terms of transitions or non-transitions as a function of the baseband signal. A logic "0" is conveyed by repeating, in the present bit interval, the same logic state as the previous bit interval; a logic "1" is conveyed by sending the complement of the logic state of the previous bit interval. The receiver compares the received bits of serial bit intervals and decodes a "0" or "1" depending upon whether adjacent bits are the same or different. Conditioning makes it possible to maintain the polarity of the signal through a channel which may be either normal or inverted.

4.12.1.2.5.2 **Diphase modulation.** Every bit interval in diphase modulation has at least one signal transition, to enhance recovery of timing. A diphase bit is divided into two equal half-intervals; in the first half-interval, the complement of the baseband signal is transmitted, and in the second half-interval, the baseband signal is transmitted.

4.12.1.3 **Optical line coding and transmission rate.**

4.12.1.3.1 **Coding.** RZ bipolar and bipolar AMI are ternary, or three-state, electrical signals. The optical regime in digital applications, however, supports only binary, two-state, signals. Therefore, the ternary signals must be converted to binary for application to optical transmitters. This is done by assigning a two-digit binary code (00, 01, and 10) to each of the three states. NRZ polar, biphase level, and conditioned diphase are binary signals and can be applied directly to the optical transmitter.

4.12.1.3.2 **Rate.** Each data unit interval in ternary coding can contain a maximum of two states. Since each state is represented by two digits after conversion to optical line code, the optical line rate is four times the electrical code bit rate. Biphase level and conditioned diphase coding depend on mid-interval transitions. Consequently, the optical line rate is twice the electrical code bit rate. NRZ is the only code of those treated here for which the optical line rate is the same as the electrical bit rate.

4.12.2 **Analog signals.** The continuous analog signal can take on any value within given limits. This value is applied (either directly or through a subcarrier) to a circuit designed to vary current through the light source. LED's (as opposed to LD's) are particularly suited to analog modulation because of their relatively linear response to drive current. A quiescent driving point is selected so that the modulation signal will vary over the most linear portion of the light source intensity characteristic. There are two types of analog signals: continuous and pulsed. Either form can take on any value over the permitted range, with the pulsed form being merely a sampled form of a continuous signal.

Downloaded from http://www.everyspec.com

4.12.2.1 **Continuous analog signals.**

4.12.2.1.1 **Amplitude modulation (AM).** The carrier amplitude is made to vary continuously with the magnitude of the modulating signal. The AM signal can directly control the intensity of the optical source.

4.12.2.1.2 **Frequency modulation (FM).** The frequency of the carrier is made to vary continuously with the magnitude of the modulating signal. FM is used in fiber optic transmission systems only to modulate a subcarrier frequency lower than the optical carrier. The subcarrier then intensity modulates the optical source. The optical frequency is not directly modulated in fiber optic technology.

4.12.2.1.3 **Phase modulation (PM).** The phase of the carrier is made to vary with the magnitude of the modulating signal. Like FM, PM is only applicable when used to modulate a subcarrier frequency, which then intensity modulates the optical source.

4.12.2.2 **Pulsed analog signals.** Each signal is sampled at a rate which retains all the information of the original signal. (According to sampling theory, if a signal is sampled at regular intervals at a rate equal to twice the highest signal frequency, the sample contains all the information of the original signal.) Pulsed analog signals are illustrated in figure 37.

4.12.2.2.1 **Pulse-amplitude modulation (PAM).** A periodic pulse train is generated such that the amplitude of each pulse is proportional to the magnitude of the continuous signal at the time of sampling. See figure 37A.

4.12.2.2.2 **Pulse-duration modulation (PDM).** A pulse train, generally composed of pulses of equal amplitude, is formed in which the time of each pulse is proportional to the sampled continuous signal. See figure 37B.

4.12.2.2.3 **Pulse-position modulation (PPM).** In a periodic train of pulses of equal width, the position of each pulse in time relative to that of its predecessor varies proportionally with the amplitude of the sampled value. See figure 37C.

4.12.3 **Interfaces.** The optical fiber system serves only as a transmission system for electronically generated communication signals. These signals must be converted to optical signals before entering the optical fiber and back to electronic signals after leaving the optical fiber. For digital signals except bipolar AMI, MIL-STD-188-114 defines signal levels and impedances for correctly processed electronic signals.

4.13 **Wavelength-division multiplexing (WDM).** WDM is a technique which allows transmission of multiple optical signals in either direction over a single fiber using different wavelengths of light. By taking advantage of spectrally selective systems, the information carrying capacity of a single fiber can be increased significantly, depending upon bandwidth of the fiber and number of wavelength channels used. The signal at each wavelength travels through the fiber independently, so each signal represents a discrete high bandwidth channel. WDM is similar to frequency-division multiplexing (FDM), in that both techniques modulate distinct carriers, although in WDM the carriers are distinct optical wavelengths. Video, voice, and data have been transmitted over a single optical fiber using WDM.

Downloaded from http://www.everyspec.com

Critical parameters in analyzing WDM systems are:

a. Coupling efficiency.

b. Crosstalk.

c. Number of channels.

d. Physical size.

e. Component reliability.

f. Cost.

4.13.1 **WDM techniques.** For simplex (one-way) operation, a multiplexer combines multiple optical signals into a composite for transmission over the fiber (figure 38). As shown in the figure, the demultiplexer separates the various wavelengths, and channels them into separate receivers. Two-channel duplex operation (figure 39) is possible with directional couplers to separate input and output wavelengths. Optical bandpass (wavelength) filters provide interchannel isolation to reduce crosstalk.

4.13.2 **Multiplexers.** Two basic methods are employed to accomplish WDM. One uses spectrally selective (dichroic) interference filters; the other uses prisms or diffraction gratings.

Downloaded from http://www.everyspec.com

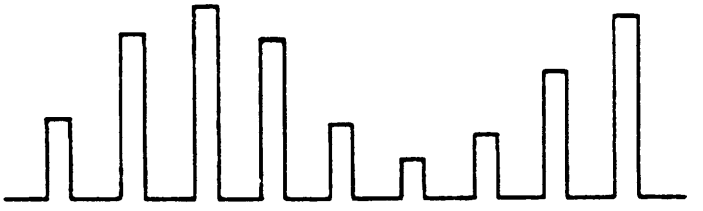

A. PULSE-AMPLITUDE MODULATION

B. PULSE-DURATION MODULATION

C. PULSE-POSITION MODULATION

FIGURE 37. Pulsed analog modulation.

Downloaded from http://www.everyspec.com

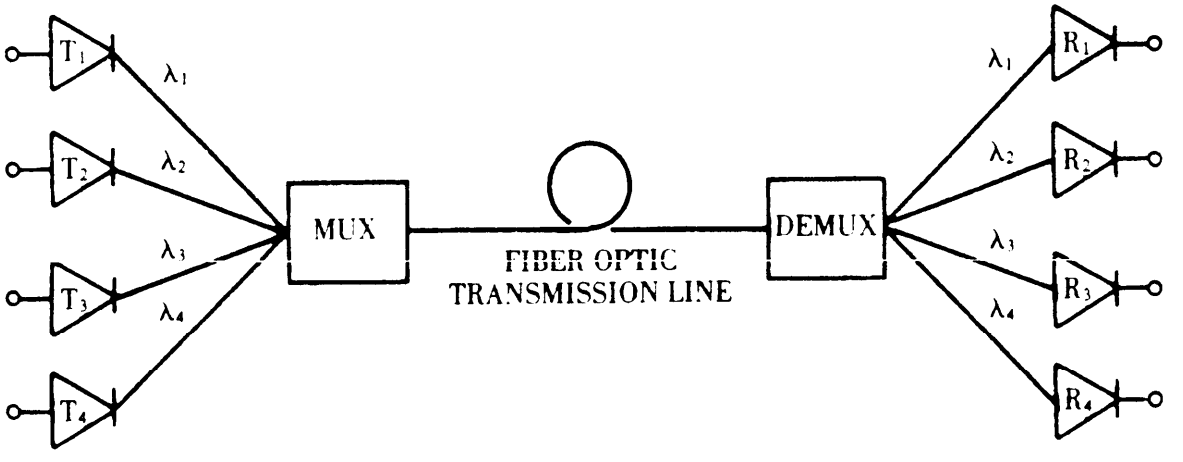

FIGURE 38. Simplex WDM.

Downloaded from http://www.everyspec.com

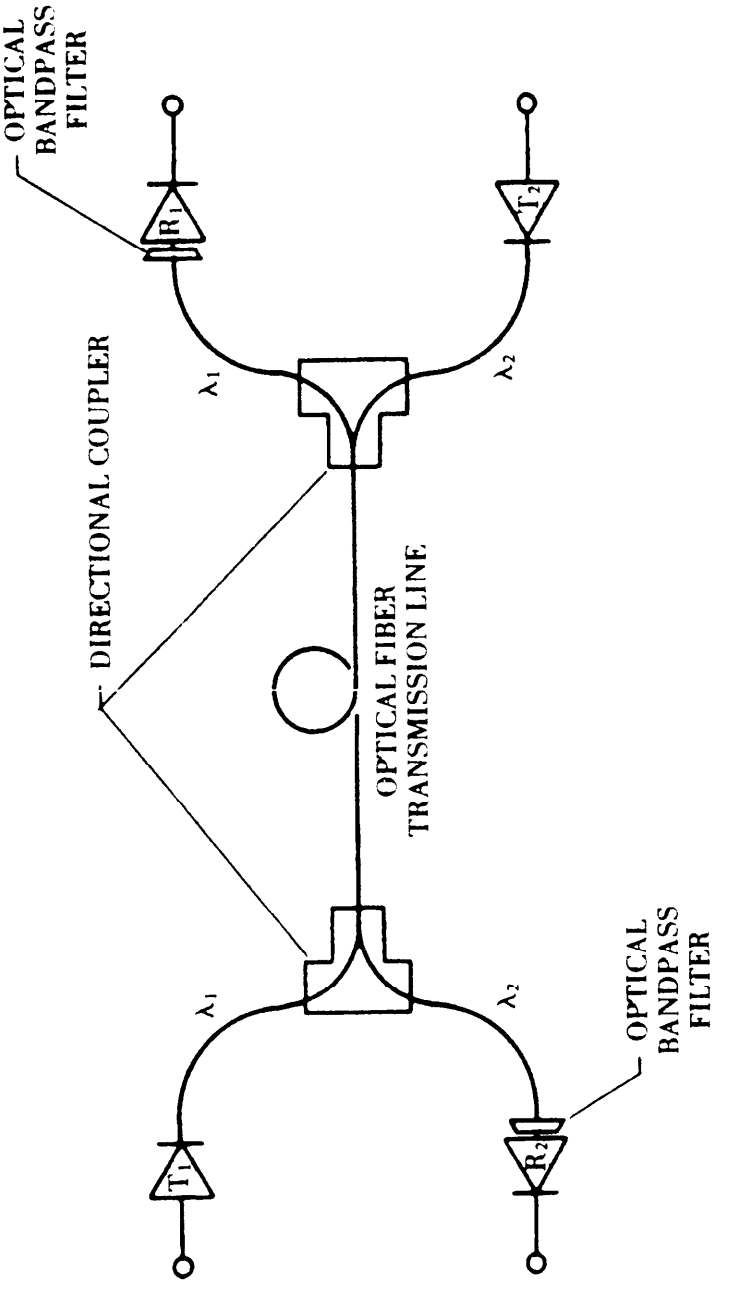

FIGURE 39. Duplex WDM.

Downloaded from http://www.everyspec.com

5. DETAILED ENGINEERING

5.1 **Introduction.** This section gives procedures for designing, installing, and testing fiber optic communications systems. Emphasis is given to design procedures, since they differ markedly from familiar procedures for designing metallic cable and microwave radio systems. Installation and testing, on the other hand, share many commonalities with metallic cable and microwave radio. Consequently, only aspects peculiar to fiber optics are covered. General system design is addressed in MIL-STD-188-100. Design of tactical systems is covered in MIL-STD-188-200.

5.2 **Fiber optic link design procedure.** The fiber optic link design procedure presented here follows a logical sequence leading to the selection of major system components.The sequence starts with assessment of the communications requirements to be satisified and standards to be met by the link. Using characteristics of a tentative selection of components, it proceeds with a power budget analysis to determine the usable span length between repeaters or terminals. (A link is considered to be made up of spans connected by repeaters.) Alternatively, it determines the excess margin, if any, over a span of given length. The sequence continues with a distortion analysis, which determines if the span is distortion-limited. If it is distortion-limited, the component selection is then revised and the process repeated. The procedure is diagrammed in figure 40 for digital links and figure 41 for analog links. Accompanying text amplifies each step in the diagrams and provides the technical and mathematical background for the tables and graphs used in the design calculations. Examples in appendix D show how to apply the procedure to the design of a long haul digital link using diphase coding, a tactical digital link using NRZ coding, and an analog video link. The examples use worksheets, a blank set of which appears at the end of the appendix. A computer program patterned after the flow diagram in figure 40 is given in appendix C.

5.2.1 **Communications requirements and standards (step 1).** The key communications requirements are link length and digital data rate or analog bandwidth. The key standards from MIL-STD-188-111 are:

a. Bit error rate (BER) for digital links. (Signal-to-noise ratio (SNR) for analog links is not standardized.)
b. Power margin.
c. Dynamic range.

5.2.1.1 **BER.** BER is the ratio of the number of erroneous bits in a digital transmission to the number of bits transmitted. MIL-STD-188-111 states that the link BER in tactical use shall not exceed 10^{-8}, with a design objective (DO) of 10^{-9}. For long haul use, the standard calls for a link BER less than $1.75 \times 10^{-10}K$, where K is link length in kilometers.Using the standard assumption of Gaussian noise statistics, the power spread between BER's of 10^{-8} and 10^{-10} is only 1 dB or less, as is the spread for long haul circuits from 1 km to 100 km (BER's of 1.75×10^{-10} and 1.75×10^{-8}, respectively). Since manufacturing tolerances alone can amount to 1 dB, it is reasonable to design for a single BER of 10^{-9}. The compromise BER simplifies design calculations, since fiber optic receiver manufacturers generally state receiver performance in terms of input power required for a BER of 10^{-9}. Thus it is not necessary to calculate the input power independently. (If it is necessary to show design computations for BER's other than 10^{-9}, use the procedure in appendix A for calculating the input power required for specific BER's.)

coverage with level 0 topology contains a point feature

Downloaded from http://www.everyspec.com

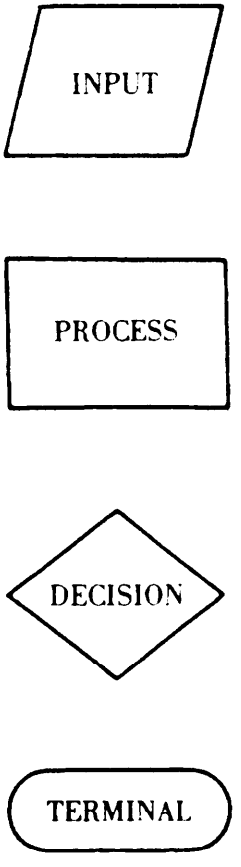

B = bandwidth of link (analog)
B_d = bandwidth-distance factor of fiber
BER = bit error rate
D = receiver dynamic range
d_{ma} = material dispersion
J = jitter
K = link length
M = power margin
P_d = power input required by optical detector
P_s = power output of optical source
R = optical line rate
SNR = signal-to-noise ratio
t = link rise time
t_r = receiver rise time
t_t = transmitter rise time
α = attenuation
λ = operating wavelength
λ_l = linewidth of optical source

FIGURE 40A. Flow diagram legend.

Downloaded from http://www.everyspec.com

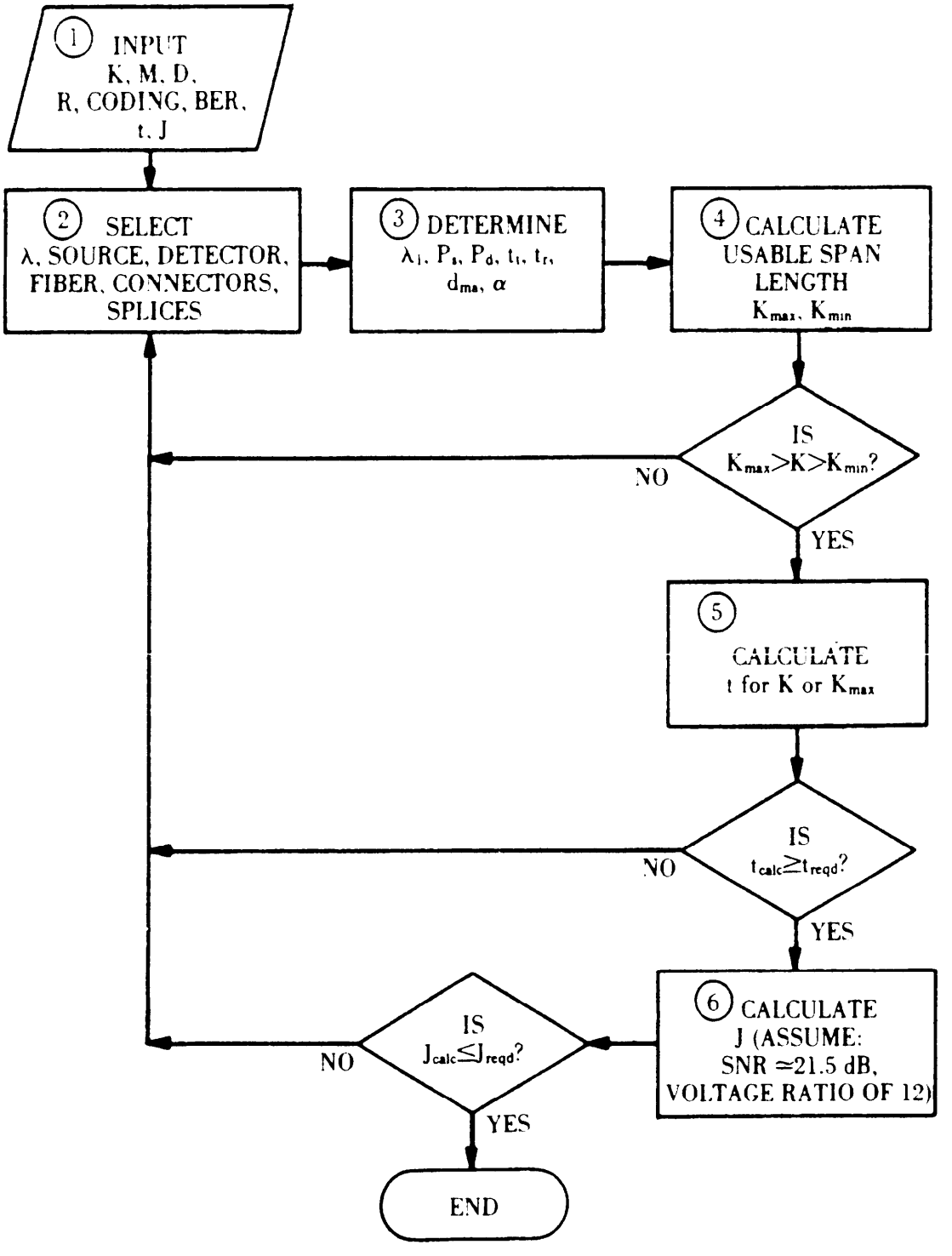

FIGURE 40B. Digital link analysis flow diagram.

Downloaded from http://www.everyspec.com

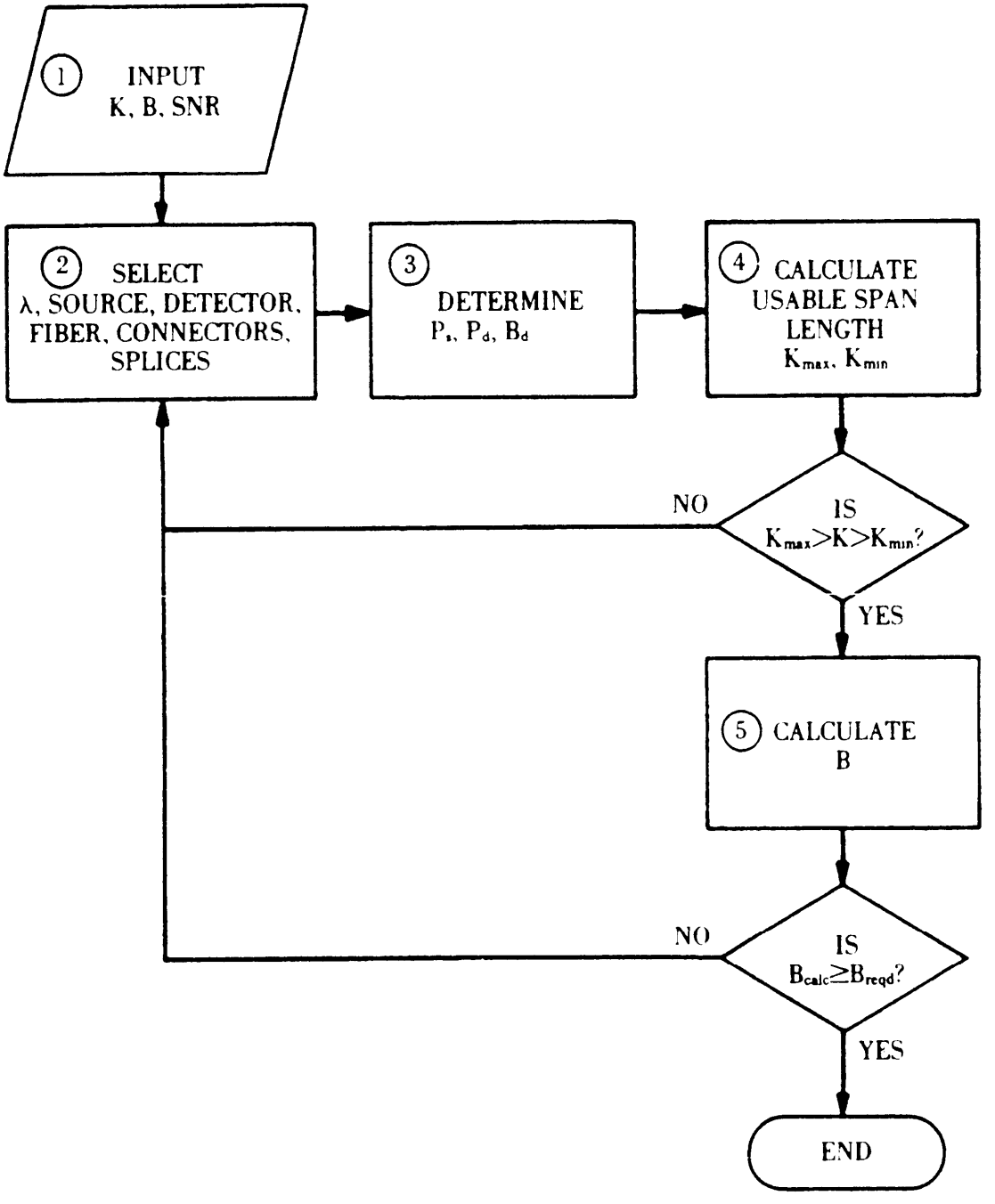

FIGURE 41. Analog link analysis flow diagram.

Downloaded from http://www.everyspec.com

5.2.1.2 **Power margin.** MIL-STD-188-111 calls for a margin of 6 dB, with a design objective (DO) power margin of 10 dB. A typical breakdown of the 6-dB margin is

a. 3 dB for component aging.
b. 2 dB for light source and detector operation at temperatures lower than the design value.
c. 1 dB for manufacturing tolerance.

Another possible source of power loss after installation is the need to splice broken fiber. Adding splices increases attenuation. Conservative design takes this into account by using a margin closer to the 10 dB design objective.

5.2.1.3 **Dynamic range.** MIL-STD-188-111 calls for the dynamic range of the optical receiver to be no less than 20 dB. Although the standard does not define dynamic range, this handbook will use definition 2 of FED-STD-1037: "The difference, in decibels, between the overload level and the minimum acceptable signal level in a system or transducer." Thus, in regard to the MIL-STD-188-111, dynamic range is the range between the minimum required receiver input power level and the receiver overload level.

5.2.1.4 **Jitter.** MIL-STD-188-111 includes jitter as a design parameter for digital links, although the value for the standard is still under consideration. A widely accepted value is 3.5 percent of a data unit interval. The jitter referred to is timing jitter. It manifests itself as the appearance of pulses offset from their expected time intervals. Systematic timing jitter, produced by intersymbol interference, pulse width differences, and clock threshold offsets, is a significant factor in optical link design. Accumulated jitter results from the summation of systematic jitter. For a small number of repeaters, N, the rms accumulated jitter grows in proportion to $N^{1/2}$; jitter grows exponentially for large N.

5.2.1.5 **Rise time and bandwidth.** Although MIL-STD-188-111 does not directly address rise time (and fall time) or bandwidth, each is an important consideration in link design. Table V gives commonly accepted rise times for the digital coding and pulsed analog modulation techniques most used in fiber optic communications. The bandwidth required for continuous-wave analog transmission varies widely with application. Frequency-division multiplexing, for example, imposes baseband bandwidth requirements in accordance with the number of voice channels involved and, consequently, the multiplexing hierarchy of groups, supergroups, and mastergroups. Television imposes video bandwidth requirements that vary in accordance with the required picture resolution. Video for radar remoting imposes still other bandwidth requirements. Finally, the choice between direct intensity modulation (IM) and FM-IM affects the bandwidth requirement.

TABLE V. Allowable rise times for most-used modulation and signal formats.

Digital Format	Allowable Rise Time (fraction of data unit interval)
NRZ bipolar	0.7
RZ bipolar	0.175
Biphase level	0.35
PPM-RZ	0.175
PDM-RZ	0.233
Bipolar AMI	0.175
Conditioned Diphase	0.35

Downloaded from http://www.everyspec.com

5.2.2 **Initial component selection (step 2).** An initial selection of components can be made on the basis of the link requirement and standards. Table VI provides broad selection criteria for this purpose.

TABLE VI. Broad component selection criteria.

Data Rate	Link Length	Wave-Length	Source	Detector	Fiber
Moderate	Short	Short	LED	PIN	GI or SI
Moderate	Medium	Long	LED	PIN	GI
High	Medium	Short	LD	APD	GI
High	Long	Long	LD	PIN	GI
Highest	Longest	Long	LD	PIN	SM

5.2.3 **Detector input power (step 3).** The receiving end of the link is the starting point for design calculations. It is necessary to determine the minimum required power level at the detector input that will provide the specified BER or SNR performance at the receiver output. Generally, manufacturers of receivers for digital links specify the power level required for a BER of 10^{-9}. If calculations are required for a BER other than 10^{-9}, or if no power level specification is available, the designer can use the procedure in appendix A, which gives a reasonable approximation. For analog receivers, the manufacturer may specify a minimum power level for a stated SNR and link bandwidth. If an SNR or bandwidth other than those stated is required, the designer can find an approximation of the input power required using the procedure outlined in appendix B.

5.2.4 **Available power budget (step 3).** The available span power budget, in dB, is the difference between the optical source power (P_s) coupled into the optical fiber, in dBm, and the power required at the detector input of the optical receiver, (P_d), in dBm:

$$\text{Available span power} = P_s - P_d \qquad \text{(Equation 5-1)}$$

5.2.5 **Allocated power budget (step 3).** The allocated power budget is a plan for allocating available power to attenuating components and power margin. The attenuating components are connectors, splices, and the optical fiber. Once the connectors have been selected and the number of splices determined, the power loss due to these components can be calculated. Subtracting the total connector loss, L_c; total splice loss, L_{sp}; and the power margin, M; from the available power leaves the power budget available for fiber loss, L_f, in dB:

$$P_s - P_d - M - L_c - L_{sp} = L_f \qquad \text{(Equation 5-2)}$$

5.2.6 **Maximum span length (step 4).** The power budget available for fiber loss, L_f, divided by the rated fiber attenuation, α, in dB/km, yields the maximum span length, K, in kilometers:

$$K_{max} = L_f/\alpha \qquad \text{(Equation 5-3)}$$

This is the maximum distance between repeaters or terminals for the required BER or SNR performance with the specified power margin.

Downloaded from http://www.everyspec.com

5.2.7 **Minimum span length (step 4).** The minimum span length is the length below which the signal is not sufficiently attenuated to prevent receiver overloading. It is calculated as the point below which total attenuation is less than the receiver dynamic range. It is calculated without a power margin, to represent the undegraded power budget. The concept is best understood by referring to the power budget plots associated with the examples in appendix D. When spans shorter than the minimum calculated length must be used, it may be possible to adjust the receiver sensitivity so that a higher input power can be accommodated. An optical attenuator can be inserted at the fiber/receiver pigtail interface. Or, higher attenuation fiber can be used if it does not decrease the usable bandwidth below the required value.

5.2.8 **Transmitter and receiver rise times (step 3).** The rise time characteristics of the optical transmitter and receiver are normally specified by the manufacturer. If precise values are not available, the rise time of transmitters, t_t, using LED's can be estimated somewhere between a few and tens of nanoseconds; for transmitters using LD's, from a fraction of a nanosecond to one nanosecond. Receiver rise times, t_r, range from one to ten nanoseconds for receivers using PIN photodiodes and less than one nanosecond for receivers using APD's.

5.2.9 **Fiber rise time (step 5).** Fiber rise time is computed on the basis of the pulse distortion characteristics of the fiber.

5.2.9.1 **Dispersion.** Material dispersion is normally the only significant component of intramodal pulse distortion. Any given fiber has an associated material dispersion coefficient, whose magnitude depends on the chemical composition of the fiber and the operating wavelength. Fused silica, for example, has a coefficient of 0.1 ns/nm-km at a wavelength of 810 nm. At 850 nm, it is 0.08 ns/nm-km, and at 950 nm, 0.047 ns/nm-km, to illustrate the range. Actual values for use in link design are sometimes available in manufacturers' literature. If values are not available, those given by figure 42 for fused silica and phosphosilicate are representative.

5.2.9.2 **Rise time characteristic of material dispersion (step 5).** The rise time related to material dispersion, t_{ma}, is given by

$$t_{ma} = d_{ma} \times \lambda_l K \qquad \text{(Equation 5-4)}$$

where

d_{ma} = material dispersion coefficient, in ns/nm-km (from manufacturer or figure 42)

λ_l = spectral linewidth of source in nm (from manufacturer; table VII, below gives ranges of values)

K = span length, in km.

TABLE VII. Typical spectral linewidths of optical sources.

	LED	LD
Short wavelength spectral line width (nm)	20-60	0.1-2.0
Long wavelength spectral line width (nm)	60-150	0.1-2.0

Downloaded from http://www.everyspec.com

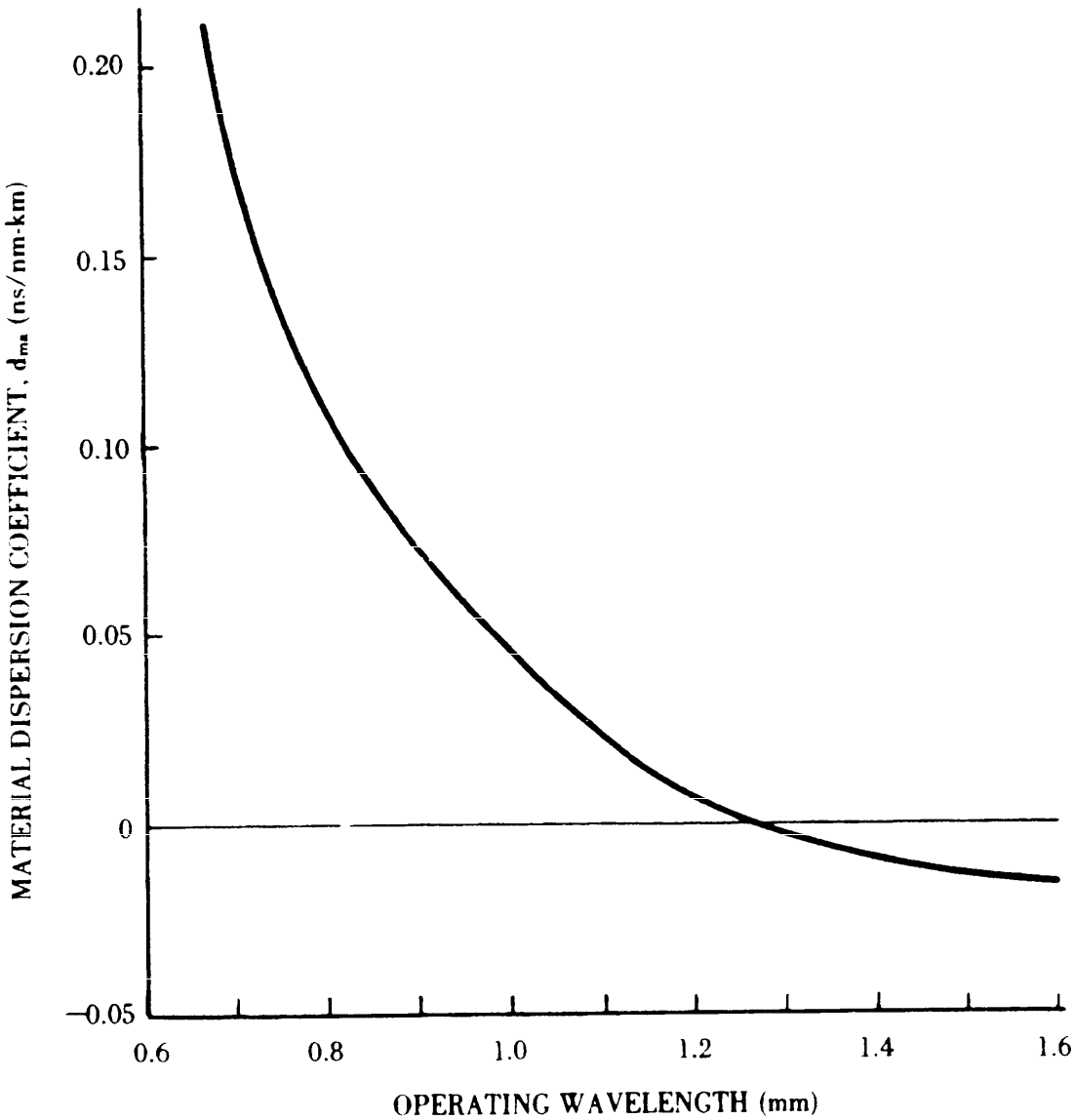

FIGURE 42. Typical material dispersion coefficient, fused silica or phosphosilicate glass fiber.

Downloaded from http://www.everyspec.com

5.2.9.3 **Multimode distortion.** The differential time delay of propagation paths from different waveguide modes produces delay distortion in the received signal. This distortion is referred to as "multimode distortion," after the mechanism which causes it (paragraph 4.2.2.2). The direct approach to determining the rise time attributable to multimode distortion requires knowledge of the refractive index profile of the fiber. This information is not readily available to the link designer. A more general approach relates rise time to the bandwidth-distance characteristic of the fiber, which is normally specified in the manufacturer's literature. The general relationship between rise time due to multimode distortion, t_{md}, and bandwidth-distance factor, B_d, is

$$t_{md} = 350 \times K/B_d \qquad \text{(Equation 5-5)}$$

The value 350 characterizes the response of a single-pole RC filter and may not indicate fiber response in some instances.

5.2.10 **Span rise time (step 5).** The overall span rise time, t, is the root-sum-square of the component rise times multiplied by a constant, k_t, which is related to the pulse shape at the detector input:

$$t = k_t \sqrt{t_t^2 + t_r^2 + t_{ms}^2 + t_{md}^2} \qquad \text{(Equation 5-6)}$$

If the common assumption of a raised cosine or Gaussian pulse shape is made, k_t is approximately 1.1.

5.2.11 **Jitter (step 6).** Link or span jitter, J, is given by

$$J = t/SNR \text{ (as a voltage ratio)} \qquad \text{(Equation 5-7)}$$

where SNR is read from figure B-1 or B-2, depending on whether the detector is a PIN photodiode or an APD, and converted to a voltage ratio by dividing by 20 and taking the antilog. Alternatively, SNR may be taken as 21.5 dB, a voltage ratio of approximately 12, which corresponds to a BER of 10^{-9}. The jitter, J_m, in a multispan circuit is given by

$$J_m = J\sqrt{N} \qquad \text{(Equation 5-8)}$$

where N is the number of spans.

5.3 **Installation engineering.** Installation engineering of fiber optics communications systems bears many similarities to that of metallic wire and cable systems. Many of the installation practices are identical; some are peculiar to fiber optic systems. Installation engineering of wire and cable inside plant is well documented and will not be repeated here. This section will detail the installation engineering considerations peculiar to fiber optic systems. Specific factors which must be taken into consideration include desired signal quality, cable run length, dimensional limitations for laying the cable, strength of the cable, topography, environmental considerations of the cable, and installation techniques.

5.3.1 **Composition of fiber optic communications systems.** From the system point of view, fiber optic communications systems are composed of optical transmitters, receivers, repeaters, optical fibers, link orderwires, and associated couplers, splices, and connectors. From the installation engineering point of view, the systems include power supplies, metallic orderwires, link orderwires, fault alarm and protection systems, repeater EMP protection systems (terminal

Downloaded from http://www.everyspec.com

EMP protection is assumed here to be provided by others), and maintenance and test facilities. Fiber optic inside plant includes equipment racks, cable termination and interconnection units, cable fanout connectors, fiber radius guides, single fiber interconnection cables, and electrical interconnections to digital or analog terminal equipment. Outside plant includes cable vaults, manholes, cable ducts, direct burial trenches, poles and messenger wires for aerial cable installation, conduit systems, inner ducts, repeater racks, and splice closures.

5.3.2 **Inside plant installation.** The inside plant installation is primarily concerned with the fiber optic terminal equipment rack, or racks. Generally, fiber optic suppliers provide standard rack configurations comprising complete equipment bays. Alternatively, special purpose configurations can be designed. In either case, the standard 19-inch relay rack is used.

5.3.2.1 **Terminal equipment bay characteristics.** The equipment bays provide mounting space for equipment shelves, jack fields, protection panel, power supplies, and fuse and alarm panel. Figure 43 shows an example rack elevation of a fiber optics equipment bay. The equipment shelves provide mounting slots for fiber optic transmitters and receivers and associated power supplies. They also provide for mounting digital or analog terminal equipment, such as multiplexers and associated modules, in the same bay. The back of the bay (not shown) provides mounting for a cable sheath connector. Fiber termination and interconnection panels route individual fibers to equipment modules.

5.3.2.2 **Terminal location.** The criteria for fiber optics terminal equipment bay location are not exacting. Basically, a normal telephone office area will suffice. The bay should be so located as to provide adequate access to front and rear. Adequate access provides working space when equipment shelves are extended outward from the rack on slides. The bay should be located at least 3 feet from strong magnetic fields and sources of impulse noise. The location should be in accordance with TEMPEST criteria. Normal telephone office lighting and ventilation systems are adequate for fiber optics terminals. Fiber optics equipment is designed to operate over a temperature range of 0° C to 50° C and at a maximum relative humidity of 95% at 40° C. The equipment may be configured for operation from either 115/230 Vac, or -48 Vdc power sources. Grounding, bonding, and shielding is required in accordance with MIL-STD-188-124 and MIL-HDBK-419.

5.3.3 **Outside plant installation.** Most conventional outside plant cable installation procedures and equipment can be used to install optical cable. Outside plant installation is addressed in FM 11-372-2/T.O. 31-10-12. The major differences between metallic and fiber optic cable installation are in monitoring tension and maintaining minimum bend radius. Optical cable is much smaller than conventional metallic cable; consequently, pulling and handling forces must be much lower. Since optical cable does not stretch, but breaks when over stressed, special care must be taken during installation to remain within the mechanical limitations of the optical cable. Although the glass fibers are delicate, they are isolated from tension by strength members and cables are typically rated from about 200 pounds to over 1,000 pounds (890 to 4,450 newtons). However, the installer must "get to strength members in the most direct way possible;" i.e., pulling force must be applied as directly as possible to the central or distributed strength members. In addition, corner blocks and cable roller guides ensure that the cable's minimum bend radius is not exceeded. Fiber optic cables are fabricated in long (1 to 3 km) continuous lengths to reduce the need for field splicing. Fewer splices mean reduced attenuation and increased reliability. The cable's small diameter allows the longer lengths to fit easily on standard size cable reels. Fiber optic cable is exposed to the same field environments as any outside plant cable, so specific environmental requirements (temperature range, longitudinal stress, type of installation, worst-case bending) determine specific cable design. Splice cases organize and protect field splices. Splices must meet two requirements: low insertion loss and sufficient mechanical strength.

Downloaded from http://www.everyspec.com

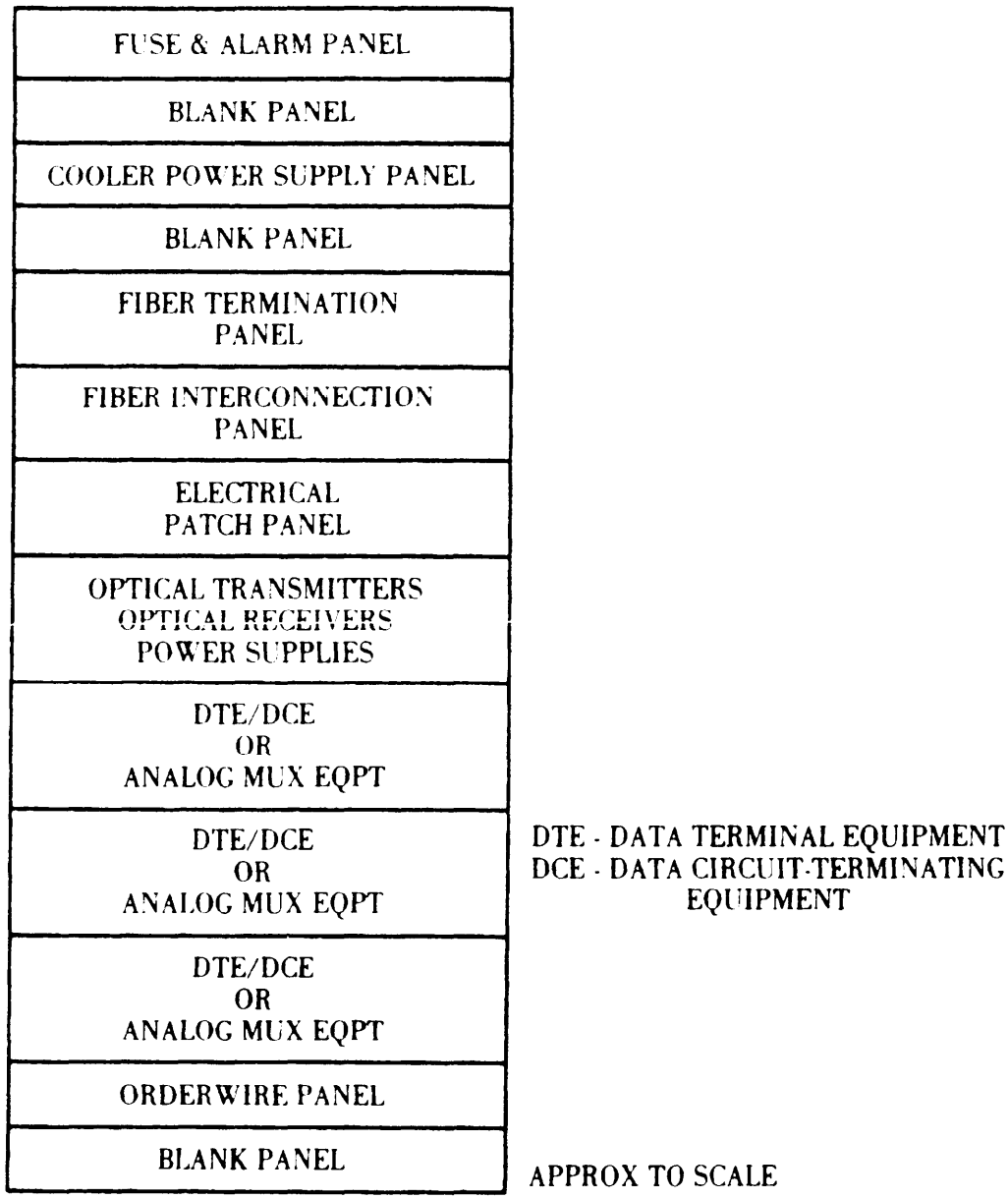

FIGURE 43. An example of a fiber optic equipment bay.

Downloaded from http://www.everyspec.com

5.3.3.1 **Direct burial installation.** Direct burial cable is installed using standard equipment. It is built to withstand tensile loads (during handling), temperature extremes, rocky soil, and (sometimes) rodent problems. Care must be taken, however, that the cable is not pulled around a greater than 90 degree turn, nor the pulling tension exceeded. (A dynamometer or tensiometer can be used to measure pulling tension.) To further protect the cable, an inner duct of plastic or polyethylene-coated aluminum is sometimes laid in the trench and the cable pulled through it.

5.3.3.2 **Duct installation.** Fiber optic cable uses the same cable vaults and manholes as metallic cable. Its smaller diameter makes its use advantageous in crowded ducts: a duct can sometimes be shared between an existing cable and a new fiber optic cable. The cable is pulled using standard pulling techniques, although tension is monitored with a dynamometer. Unless the cable is fabricated with a pulling cap or housing, a wire mesh grip is used. The wire mesh grip is slid onto the cable, and the pulling grip is attached to a swivel in line with the pulling rope. Steel central strength members are separately secured to the pulling grip. Cable can be pulled from midpoint in a run, with one segment of the cable pulled into the conduit from the reel and the remainder laid out in a figure 8 pattern, then pulled into the next conduit. Often an inner duct (also called a subduct or miniduct) is pulled through first and the cable pulled through it. The purpose of the inner duct is to lessen pulling friction, especially in ducts containing other cables. The inner duct precludes the problems of shearing often encountered through entanglement with other cables. The inner duct is typically a plastic or polyethylene-coated aluminum tube, about one inch in diameter. To facilitate pulling, it is sometimes lubricated with a lubricant which will not have a deleterious effect on the cable sheath. A duct with existing cable is rodded prior to pulling cable either with or without inner duct. To ensure that the minimum bend radius of the cable is not exceeded, corner blocks are used as guides. Field splices are performed either in the manhole, or directly outside.

> NOTE: Fusion splicing must not be performed in manholes where volatile gases may be present.

5.3.3.3. **Aerial installation.** Aerial cables are supplied either with an integral messenger, or lashed to a separate messenger. Cables must be able to withstand wind and ice loading. The same cautions against small-radius bends and pulling tension as for direct burial and duct installation apply to aerial installation.

5.4 **System tests.** System tests during installation provide important data to the installers. System tests upon completion of the installation provide the basis for system acceptance by the Government. System tests during the operation and maintenance period detect deterioration that would eventually lead to system failures; once failures have occurred, tests are used to locate and diagnose faults.

5.4.1 **Test rationale.**

5.4.1.1 **Installation and acceptance tests.** Installation and acceptance tests are predicated on the use of actual link equipment to the maximum extent possible. Although some of the tests presented here have been excerpted from MIL-STD-188-111, some require laboratory test equipment that is seldom found in the field. Consequently, installation tests should be limited to those needed to verify satisfactory installation. Acceptance tests should demonstrate system performance in accordance with MIL-STD-188-111. Both purposes can be achieved through tests of total link attenuation, BER, and power margin. These tests can be made using the installed transmitters, receivers, and fiber optic cables in conjunction with an optical power meter, optical attenuator, and BER test equipment.

Downloaded from http://www.everyspec.com

5.4.1.2 **Diagnostic tests.** Diagnostic tests follow a logical hierarchical order, from system loopback to isolate faulty links, to link loopback to isolate faulty direction, to link one-way to isolate faulty end, to end subsystem to isolate faulty components. In this way the cable fault can be located precisely or the defective component can be identified without ambiguity.

5.4.2 **Test equipment.** The required test equipment and their operating characteristics are listed in table VIII.

a. Test instruments may be designed to operate at only one wavelength range, or over several wavelength ranges. Transmission wavelength ranges are centered at 850, 1300, and 1550 nm. Instrument selection will be influenced by anticipated wavelength requirements.

b. Test instruments may be design-limited to measure only multimode fiber performance. Other test instruments may be capable of measuring both multimode and single-mode fiber performance. Instrument selection will be influenced by anticipated requirements.

TABLE VIII. Test equipment for fiber optic system tests.

Equipment	Characteristics
BER Pattern Generator	Patterns: 2^{15}-1 PRBS in NRZ format, as a minimum Outputs: Clock, with delay trigger data Output Levels: In accordance with MIL-STD-188-114
Optical Attenuator	Attenuation: 0 to 60 dB Optical Connectors: Compatible with system under test
Optical Power Meter	Wavelength Range: 800-1550 nm Measurement Range: 1 nW to (as required by source)
BER Counter	Data Input: NRZ 15-bit pattern PRBS Error Readout: To 10^{-11} Data Input Levels: TTL
High-Power Optical Test Transmitter	Optical Power Output: ≥ 3 dBm Input: In accordance with MIL-STD-188-114, balanced Jitter: <1 ns, for leading or trailing edge
Optical Test Receiver	Optical Sensitivity: ≤50 dBm Jitter: ≤1 ns Dynamic Range: 25 dB Output: Compatible with MIL-STD-188-114, balanced
Square Wave Generator	Output: In accordance with MIL-STD-188-114 Rise/Fall Time: ≤20 ns @ 10 MHz
Oscilloscope	Frequency Response: dc to 350 MHz Rise Time: ≤1 ns Sensitivity: 10 mV/cm Time Base: 1 ns/division or better, delayed sweep Dual trace, capable of differential measurements

Downloaded from http://www.everyspec.com

TABLE VIII. Test equipment for fiber optic system testing. (continued)

Equipment	Characteristics
Optical Time Domain Reflectometer	Injected Pulse: Wavelength Range: 800-850 nm, 1300-1550 nm Pulse Width: 80 ns Repetition Rate: Adjustable from 100 to 1000 pps @ 80 ns Peak Power: 0.2 W into a 63-μm core Signal: Electrical Bandwidth: 130 MHz @ 80-ns position; 5 MHz @ 80 ns/5 MHz Output Impedance: 50 ohms Pretrigger: 300 ns before optical t_0 Performance: Length Measurements: 2-way total loss less than 60 dB Attenuation Measurements: 2-way total loss less than 25 dB Fiber Optic Coupling: XY adjustable fixture Maximum Fiber Size: 1000 μm o.d.
Mode Stripper	1-inch mandrel

5.4.3 **Test procedures.** The procedures for the required tests are given below, with block diagrams to illustrate test setups.

5.4.3.1 **Attenuation.** (Causes of attenuation are discussed in paragraph 4.2.4.) The insertion loss method is the accepted technique for measuring cable attenuation in the field. Figure 44 shows a test configuration using an LED, an optical power meter, connectors, and 3 short cables. The middle cable (figure 44A) serves as a reference cable, and must be used with the same connectors as the system to be tested. The LED is chosen over an LD because of its inherent stability, and must match the normal operating wavelength of the system to be tested. The cable exiting the source should be wrapped four times around a one-inch mandrel, to strip off high-order modes that normally would be attenuated by a longer (1 km) cable.

a. Measure the output power (in dBm) of the source through the reference cable. Take 5 to 10 readings, disconnecting and reconnecting the reference cable (both ends) between readings to minimize connector uncertainty. The average reading is the reference value.

b. Replace the reference cable with the cable to be tested. This might require moving either the LED or the power meter to a new location. Generally, it is better to move the power meter, since the LED would require warmup time after being moved.

c. Measure each fiber in the cable. To determine the fiber attenuation, simply subtract the reference level from these measured values.

5.4.3.2 **Attenuation test and fault location using an OTDR.** The optical time domain reflectometer (OTDR) is useful for taking three basic measurements: total system attenuation, discrete connector or splice loss, and distance to faults or to the fiber end. Figure 45 is a block

Downloaded from http://www.everyspec.com

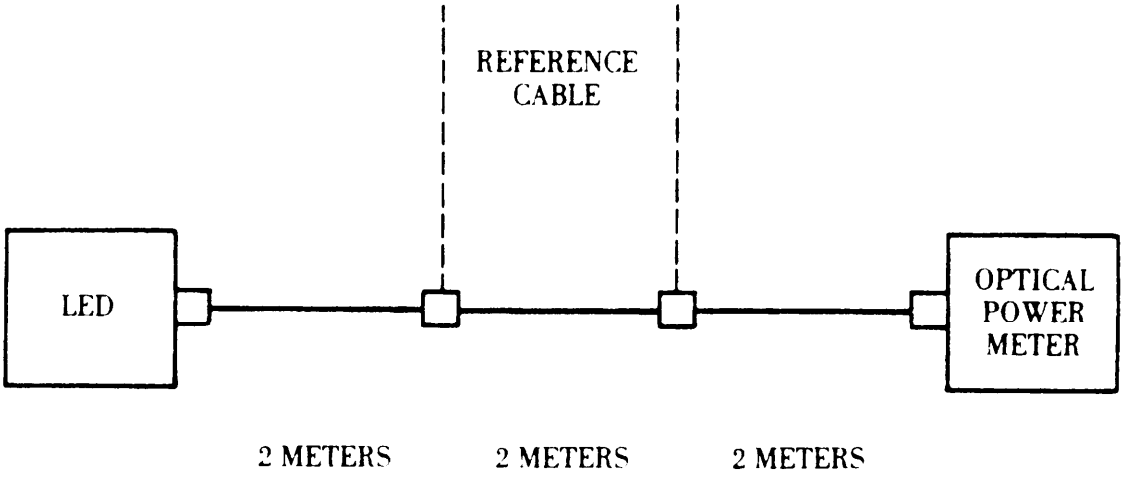

A. CONFIGURATION WITH REFERENCE CABLE

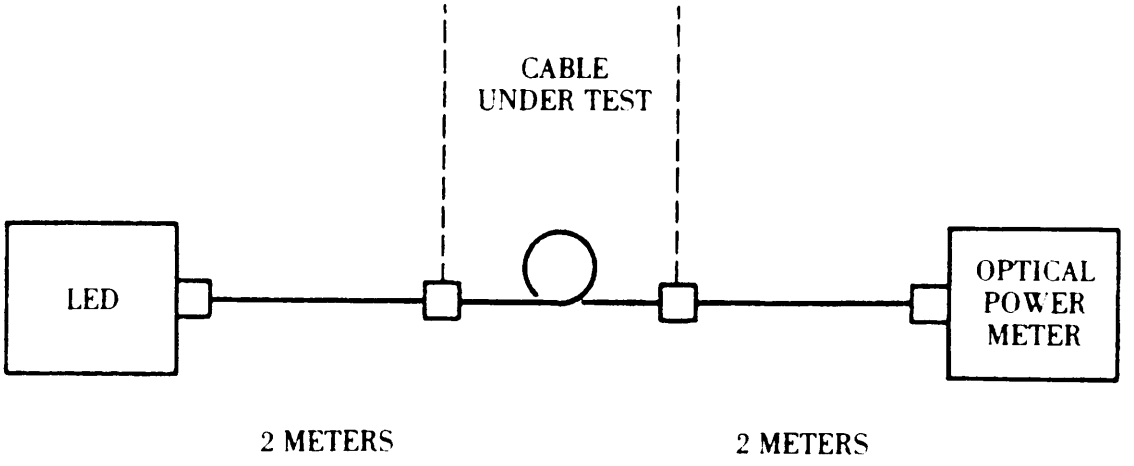

B. CONFIGURATION WITH CABLE UNDER TEST

FIGURE 44. Test configuration for attenuation.

Downloaded from http://www.everyspec.com

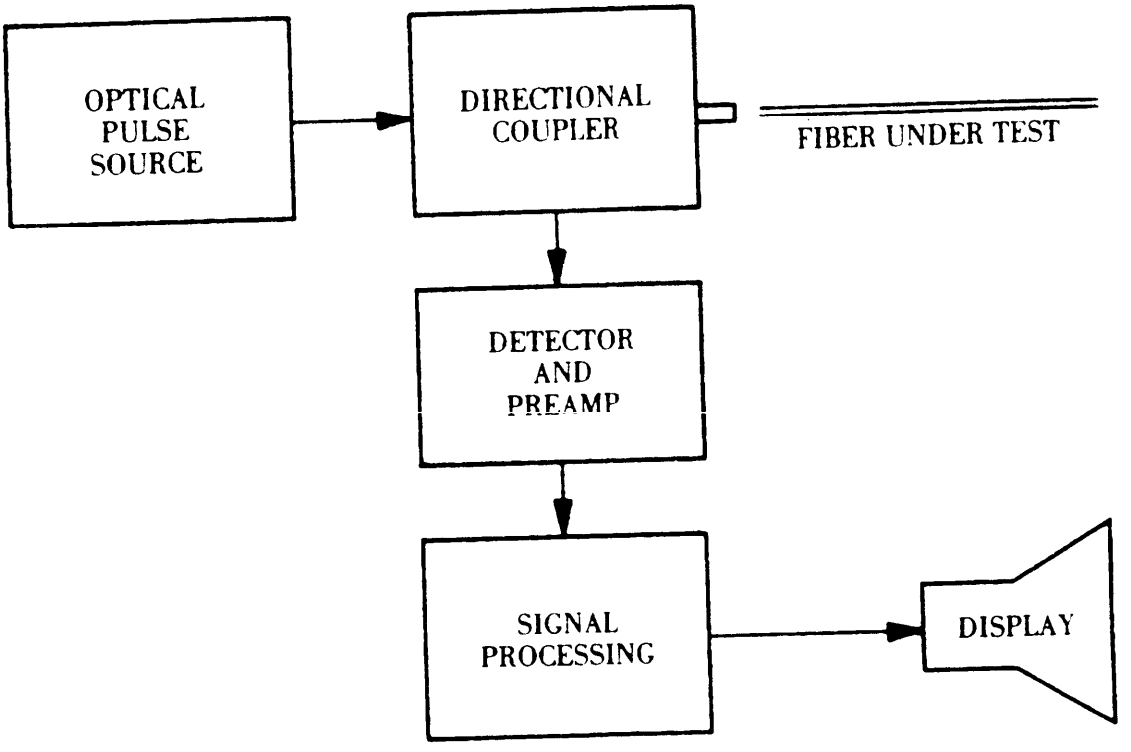

FIGURE 45. OTDR block diagram.

Downloaded from http://www.everyspec.com

diagram of an OTDR. Acting as an optical radar, the OTDR launches high intensity light pulses into the fiber under test and detects reflections and backscatter signals. These signals are summed using various sampling or integration schemes (such as a boxcar integrator) and displayed on an oscilloscope. Location and attenuation of breaks, faults, connectors, splices and length of fiber can be measured from the trace. OTDR's are designed to operate at nominal wavelengths of 850 nm, 1300 nm, and 1550 nm, and are available for both single-mode and multimode operation.

a. Connect the OTDR to the fiber under test, using the connector or pigtail provided. Adjust the trace so that it fills, but does not overfill, the screen vertically and covers the desired distance horizontally. See figure 46 for a typical trace.

b. Reading screen divisions directly, end-to-end fiber attenuation, splice loss, and connector loss can be read from the vertical scale (in decibels), by subtracting the backscattered signal level (in decibels) following the point in question from the signal level before the point. The horizontal distance scale may be expanded around any feature of interest in the display. The vertical power scale may also be expanded.

5.4.3.3 **BER, power margin, dynamic range, and receiver sensitivity.** (Refer to 5.2.1.1, 5.2.1.2, 5.2.1.3, and 5.2.3. Test configuration is shown in figure 47.) The system under test consists of an optical transmitter, a length of optical cable, and an optical receiver. The test setup includes a BER pattern generator to modulate the optical transmitter and a variable optical attenuator interposed between the receiving end of the cable and the receiver. Receiver output feeds a MIL-STD-188-114 interface, or a balanced-to-TTL converter, which is connected to a BER counter. To measure receiver dynamic range, provisions are made to substitute a high power optical transmitter for the transmitter under test. To measure receiver sensitivity, an optical power meter replaces the receiver under test.

a. Measure BER as follows:

1. Set the BER pattern generator for a pseudorandom bit sequence of 2^{15}-1 bits at the highest system bit rate.
2. Adjust the optical attenuator to provide the minimum input power specified for the receiver.
3. Measure the received signal BER on the BER counter. This BER must meet the values specified for the system under test.

b. Measure power margin as follows:

1. Set the BER pattern generator for a pseudorandom bit sequence of 2^{15}-1 bits at the highest system bit rate, still using the transmitter under test.
2. Starting from a strong signal position, increase attenuation until the BER specified for the system is observed.
3. Measure the optical power at the attenuator input (A) and at the attenuator output (B).
4. Calculate the power margin from
   power margin = 10 log (attenuator power out/attenuator power in).
   (If power is read in dBm, power margin = power out_{dBm} − power in_{dBm}.)
5. The result of this calculation is the power margin at the specified BER. To reverse the procedure and measure BER with a high power margin would be impractical since it could take years to establish the BER.

Downloaded from http://www.everyspec.com

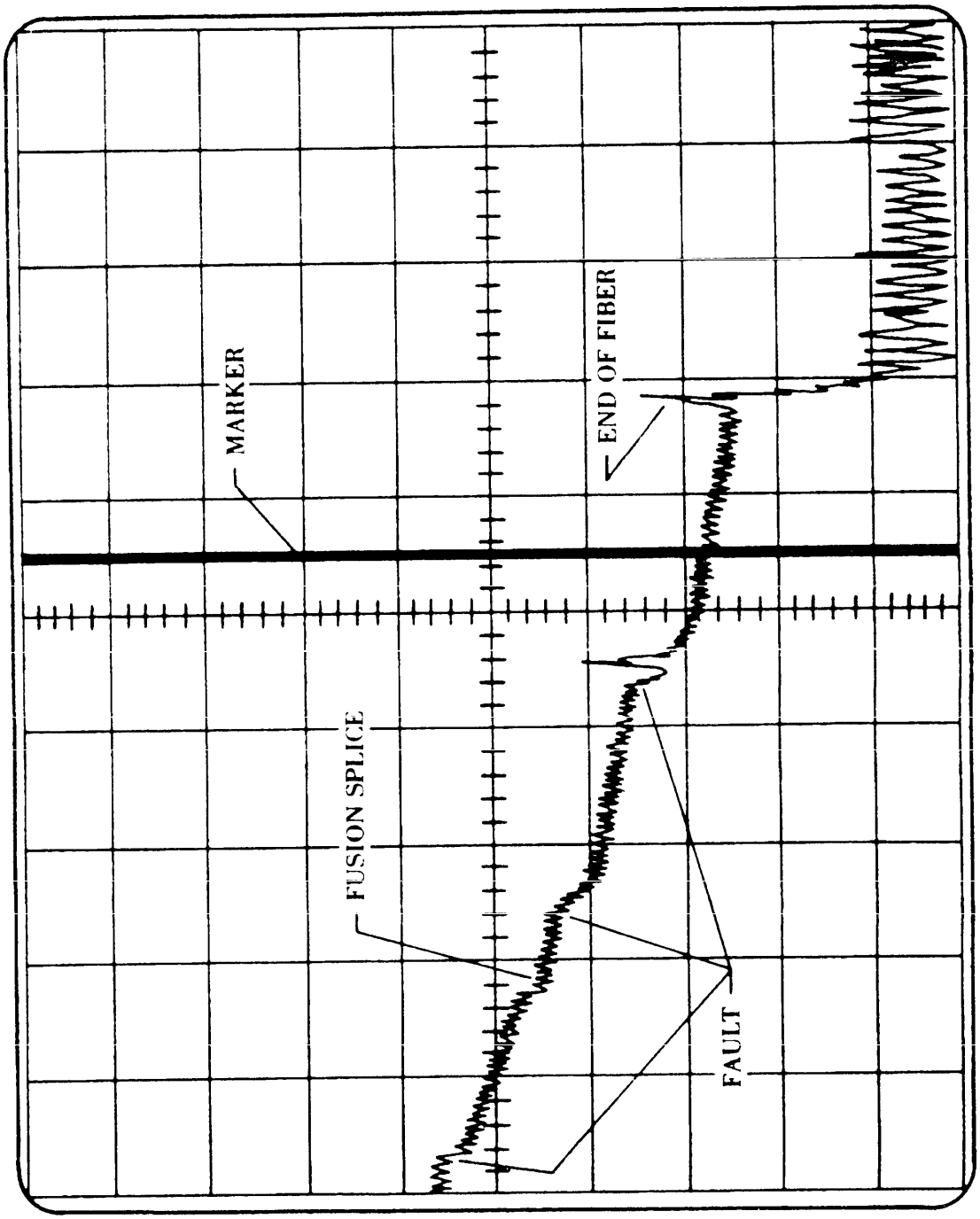

FIGURE 46. OTDR trace showing attenuation, connector locations, and fiber end.

Downloaded from http://www.everyspec.com

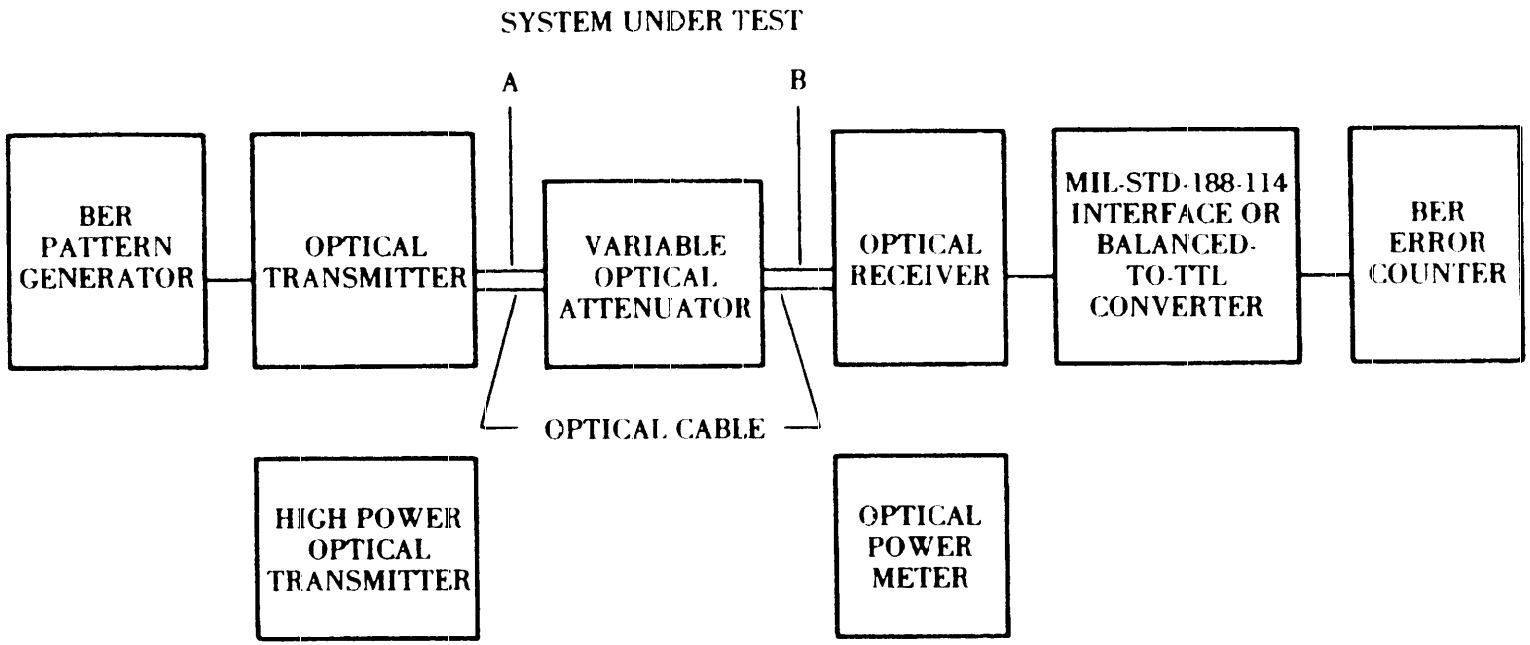

NOTE: A BALANCED-TO-TTL CONVERTER MAY BE USED IN LIEU OF TEST EQUIPMENT PROVIDING A MIL-STD-188-114 INTERFACE.

FIGURE 47. Test configuration for BER, power margin, dynamic range, and receiver sensitivity.

Downloaded from http://www.everyspec.com

5. The result of this calculation is the power margin at the specified BER. To reverse the procedure and measure BER with a high power margin would be impractical since it could take years to establish the BER.

c. Measure receiver sensitivity as follows:

1. Adjust the BER pattern generator for a pseudorandom sequence at the highest system bit rate. (The sequence selected depends upon system application. If the application is unknown, use a standard 2^{15}-1 pattern. In some applications, a fixed word pattern would be appropriate.)

2. Starting from the maximum position, decrease the attenuation of the optical attenuator until the specified BER is achieved.

3. Use the optical power meter to measure the power at the attenuator output.

4. Subtract the loss due to the coupler used to connect the fiber to the receiver under test.

d. Measure receiver dynamic range as follows:

1. Substitute the high power test transmitter for the system transmitter.

2. Repeat the receiver sensitivity measurement (above). (CAUTION: Do not exceed maximum rated input power for the receiver.)

3. Reduce the attenuation of the optical attenuator while observing the receiver analog output signal. Identify the point where overload begins to occur.

4. Measure the power at the attenuator output and subtract the connector loss. The difference in power between the receiver overload level and the sensitivity reading is the dynamic range.

5.4.3.4 **Distortion and jitter.** (Refer to paragraphs 5.2.1.4, 5.2.11, and 5.2.9.3. Test configuration is shown in figure 48.) The system under test consists of an optical transmitter, a length of optical cable, and an optical receiver. The test setup includes a BER pattern generator connected to modulate the optical transmitter, with receiver output feeding a dual channel oscilloscope. Adjust the BER pattern generator for a pseudorandom sequence of 2^{15}-1 bits at the highest system bit rate. Set the oscilloscope for dual trace, ADD, or A+B, and one channel inverted, as shown in figure 48.

a. Measure distortion as follows;

1. Connect the BER pattern generator CLOCK OUT to the oscilloscope EXTERNAL TRIGGER.

2. Observe the resulting "eye" pattern on the oscilloscope. This pattern results from applying the data signal to the vertical deflection plates while triggering the horizontal sweep at the data clock rate. The eye shown in figure 49 is just one of many possible patterns — changing the coding technique will change the pattern. For all patterns, however, various forms of distortion tend to "fill in" the eye, leaving a smaller opening, and the size of this new opening can be used to calculate distortion. Using figure 49 as an example, shrinkage of the opening to 75% of its undistorted width (t) would indicate 25% distortion.

Downloaded from http://www.everyspec.com

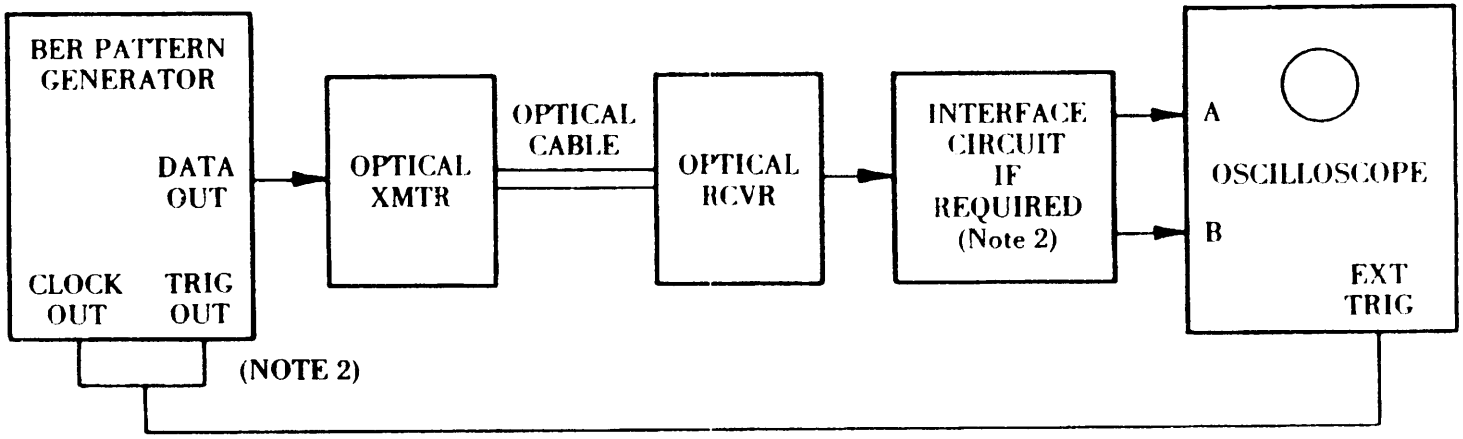

NOTES:

1. CONNECT SCOPE EXT TRIG TO CLOCK OUT TO MEASURE DISTORTION. CONNECT SCOPE EXT TRIG TO TRIG OUT TO MEASURE JITTER.

2. A MIL-STD-188-114 INTERFACE OR A BALANCED-TO-TTL CONVERTER MAY SATISFY THE REQUIREMENT FOR AN INTERFACE CIRCUIT.

FIGURE 48. Test configuration for distortion and jitter.

Downloaded from http://www.everyspec.com

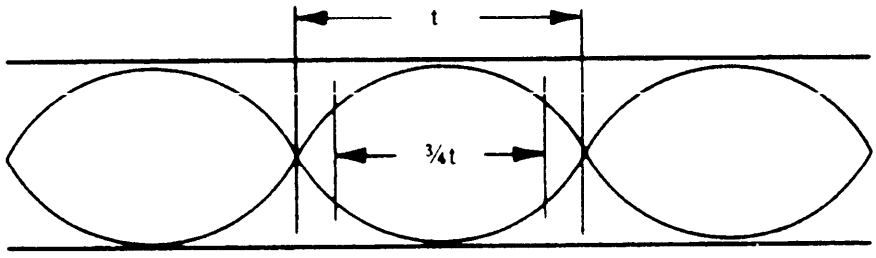

t = WIDTH OF EYE PATTERN WHEN NO DISTORTION IS PRESENT.

FIGURE 49. Eye pattern.

Downloaded from http://www.everyspec.com

b. Measure jitter as follows:

1. Connect the BER pattern generator TRIGGER OUT to the oscilloscope EXTERNAL TRIGGER.

2. Set the oscilloscope for a delayed time base mode and adjust to display a bit transition near the end of the bit sequence. Spread the time base as required for accurate measurement, observing that proper sync is maintained.

3. Observe the pulse period and one of the repetitive transitions between states. The presence of repetitive transitions at different locations on the horizontal time axis indicates jitter. The maximum extent of the variation in time of the transition along the horizontal time axis is the transition uncertainity. Referring to figure 50, the extent of jitter is determined by the ratio of the transition uncertainity, N, to the pulse period, t. It is given as a percentage by:

jitter (%) = 100 (N/t).

5.4.3.5 **Optical transmitter rise and fall time.** (See paragraphs 4.2.3 and 5.2.8. Test configuration is shown in figure 51.) In this test, a square wave generator is used to modulate the optical transmitter under test. The optical transmitter output is connected to an optical attenuator, which in turn is connected to a high speed optical receiver. An oscilloscope monitors the optical receiver output.

1. Set the square wave generator to a bit rate corresponding to the highest system bit rate and adjust the output to 400 mV p-p, referenced to ground.

2. Adjust the optical attenuator so that no distortion appears on the oscilloscope.
3. Measure the 10%-90% rise and fall times on the oscilloscope.

5.4.3.6 **Optical receiver rise and fall time.** (See paragraphs 4.2.3 and 5.2.8. Test configuration is shown in figure 52.) The test configuration consists of a square wave generator, an optical transmitter, an optical attenuator, and the optical receiver under test, all connected in series. An oscilloscope monitors the optical receiver output.
1. Set the square wave generator to a bit rate corresponding to the highest system bit rate and adjust the output to be compatible with the appropriate MIL-STD-188-114 levels.

2. Disconnect the optical cable from the receiver and connect it to the optical power meter.

3. Adjust the optical attenuator to give -40 dBm (100 nW).

4. Reconnect the cable to the receiver and measure the 10%-90% rise and fall times on the oscilloscope.

5.4.3.7 **Bandwidth.** (Refer to paragraph 4.2.3.1 and 4.2.3.2. Test configuration is shown in figure 53). Bandwidth, a measure of the information-carrying capacity of a fiber, is defined as the highest modulation frequency that can be transmitted (at a specified wavelength) with optical power loss not greater than 50% (-3dB) of the zero frequency component. The swept-frequency method is the accepted technique of measuring bandwidth in the field. The equipment necessary to make this measurement are a mode scrambler, frequency generator, optical transmitter, optical receiver, and a spectrum analyzer or selective level meter. There are bandwidth test sets available that combine this equipment, minus the mode scrambler, into a transmitter and a receiver.

Downloaded from http://www.everyspec.com

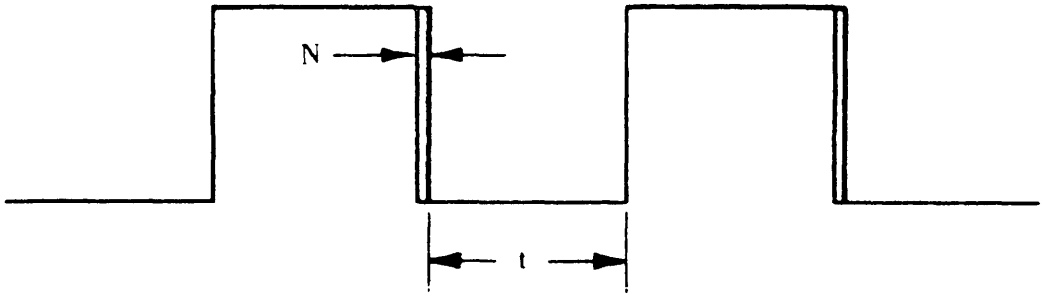

t = PULSE PERIOD AT 50% POINTS.
N = TRANSITION UNCERTAINTY.

FIGURE 50. Jitter.

Downloaded from http://www.everyspec.com

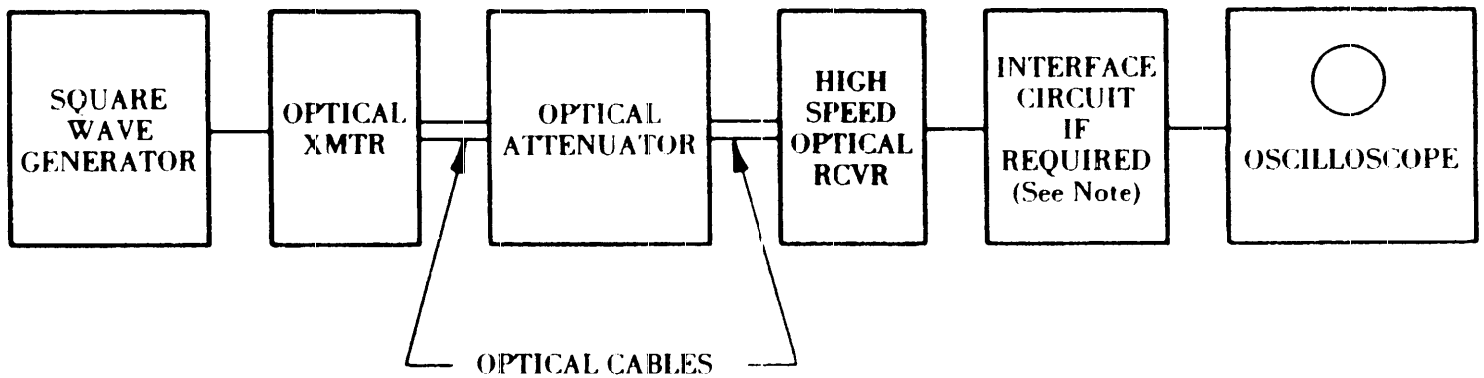

NOTE: A MIL-STD-188-114 INTERFACE OR A BALANCED-TO-TTL CONVERTER MAY SATISFY THE REQUIREMENT FOR AN INTERFACE CIRCUIT.

FIGURE 51. Test configuration for transmitter rise and fall time.

Downloaded from http://www.everyspec.com

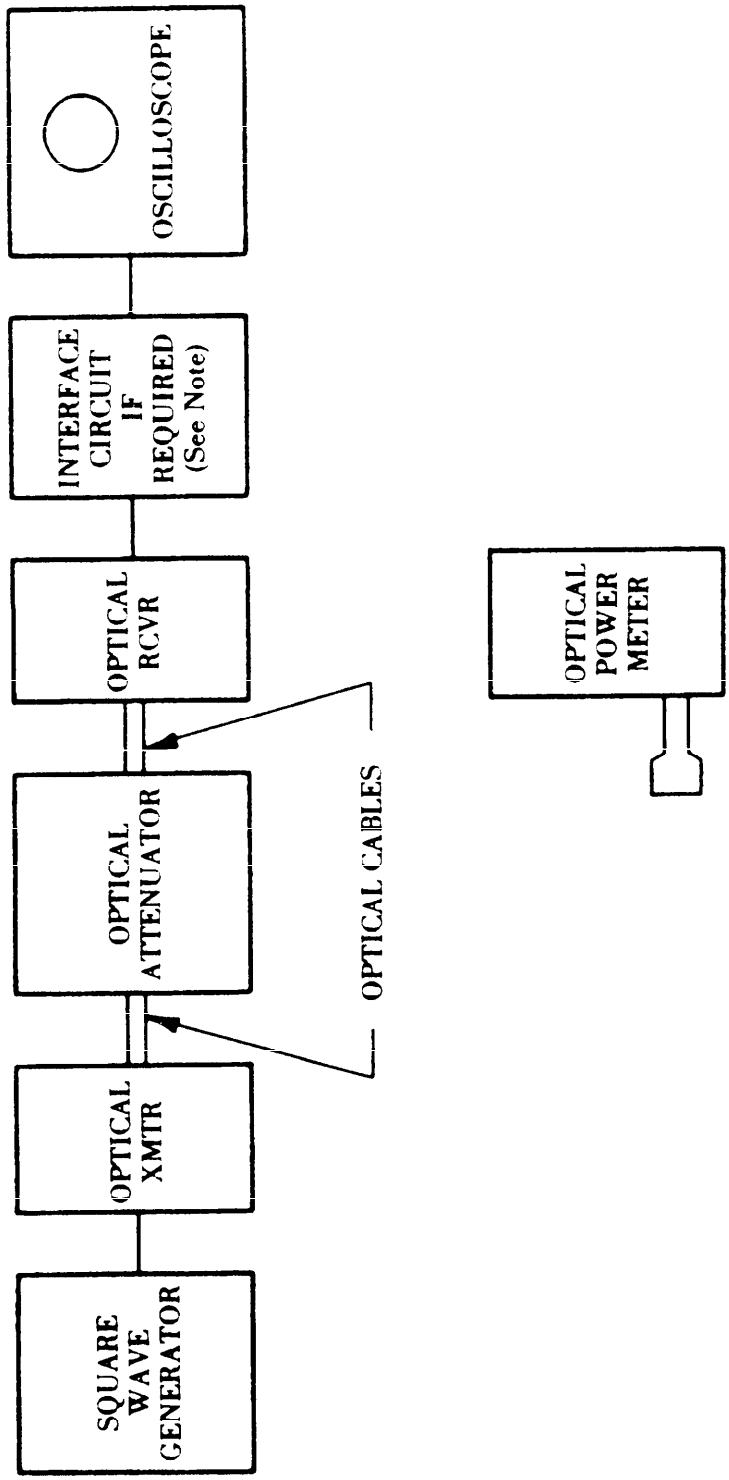

NOTE: A MIL-STD-188-114 INTERFACE OR A BALANCED-TO-TTL CONVERTER MAY SATISFY THE REQUIREMENT FOR AN INTERFACE CIRCUIT.

FIGURE 52. Test configuration for receiver rise and fall time.

Downloaded from http://www.everyspec.com

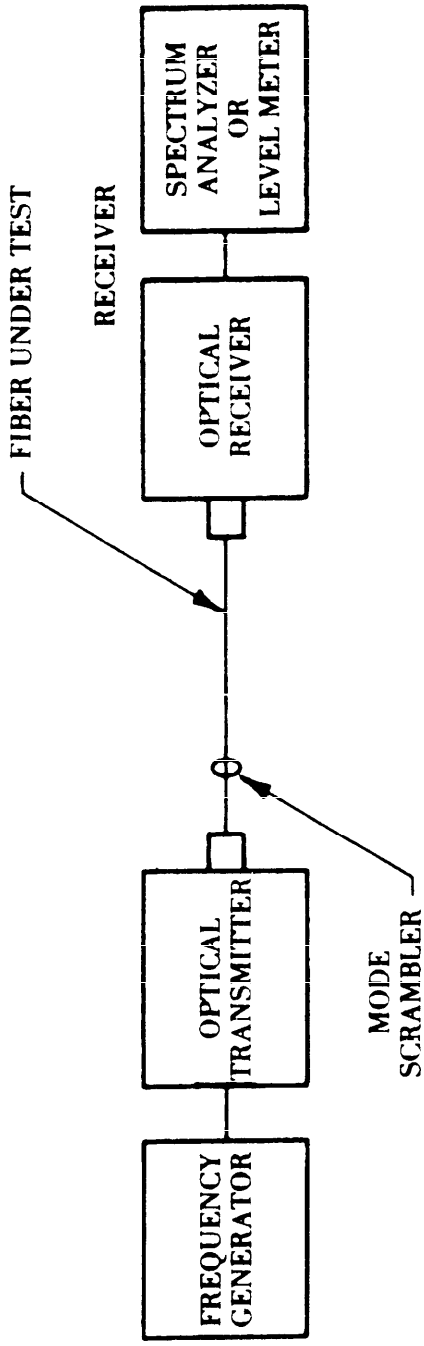

FIGURE 53. Test configuration for bandwidth.

Downloaded from http://www.everyspec.com

a. Measure the frequency response of the test equipment through the mode scrambler by sweeping the frequency spectrum from 10 MHz to 350 MHz (or the desired upper frequency limit) and plotting the optical power loss. The plot would be a straight line if the equipment were functioning perfectly. Realistically, there will be a deviation within the range of ±1 dB as the frequency spectrum is swept. This deviation will not adversely affect the measurements as long as the deviations have been plotted and remain consistent.

b. Take the receiver equipment to the distant end of the cable system. Sweep the frequency spectrum of each fiber from 10 MHz to 350 MHz, plotting the optical loss compared to the loss of the zero frequency component as read on the selective level meter or the spectrum analyzer. The frequency at which the optical power loss has dropped 3 dB optical (6 dB electrical) as compared with the reference frequency response (paragraph a) is the fiber bandwidth. The 6 dB electrical bandwidth is the same value as the 3 dB optical bandwidth. There is a square relationship between the two values; e.g., 5 dB optical is the same as 10 dB electrical. The optical value refers to the received optical power whereas the electrical value refers to the electrical power generated at the detector.

Custodians:
Army - SC
Navy - EC
Air Force - 90
Defense Communications Agency - DC

Review activities:
Army - CR
Navy - OM
Air Force - 13
DoD/NASA - TT

User activities:
Army - CR, ER, SC
Navy - YD
Air Force - 02
DoD/NASA - NS

Preparing activity:
Army - SC
(Project SLHC-4150)

Civil Agency Coordinating Interest:
National Communications System - NCS

Downloaded from http://www.everyspec.com

APPENDIX A

CALCULATION OF REQUIRED DETECTOR INPUT POWER FOR DIGITAL LINKS

10. **General.** This appendix presents methods and supporting theory for calculating the detector input power required for a specified BER.

20. **Detector input power for digital links.** The signal power required at the detector input, P_d watts, for digital links can be calculated by

$$P_d = E_p \times (R_o/2) \qquad \text{(Equation A-1)}$$

where E_p is the required energy per pulse (in joules) and R_o is the optical line rate in bits/sec. (Note: One watt = one joule/sec.)

20.1 **Energy per pulse.** The required energy per pulse is the product of the required number of photons per pulse and the energy of a photon.

$$E_p = N \times hf \qquad \text{(Equation A-2)}$$

where

N = the number of photons per pulse

hf = the energy of a photon (h = Planck's constant = 6.626×10^{-34} joule-sec, and f = light frequency in hertz)

Figure A-1 is a nomograph for determining required detector input power as a function of photons/pulse, wavelength, and optical line rate.

20.1.1 **Photodetection.** Optical power incident on the detector input generates hole-electron pairs in the photodiode. The pairs separate under the influence of electrical fields in the photodiode, producing a displacement current. On the average, the number of hole-electron pairs generated per second is proportional to the number of incident photons per second. It follows that the detector output current is also proportional to the number of incident photons per second.

20.1.2 **Quantum noise.** The detector output waveform is an electrical replica of the signal incident on the input except for perturbations which occur in photodetection. Statistical uncertainty as to whether an incident photon will generate a hole-electron pair in the photodiode produces perturbations in the output current. The perturbations manifest themselves as noise, referred to as "quantum noise." (Quantum noise should not be confused with "quantization noise," which results from sampling processes such as that used for pulse code modulation.)

20.1.3 **Thermal noise.** The electronic amplifier portion of the optical receiver adds thermal noise. Thermal noise has two components: Johnson noise and shot noise. Johnson noise results from random molecular motion in resistive components of the amplifier, in particular, those in the "front end" circuitry. Shot noise occurs when a current of charge carriers passes through a surface at statistically indpendent times; for example, transistor bias current.

Downloaded from http://www.everyspec.com

Instructions for Nomograph (figure A-1)

1. The first scale reads the number of photons per pulse (N).

2. The second scale reads energy (in joules) per pulse (E_p).

3. The third scale reads average detector input power (P_d) in dBm.

4. The fourth scale reads the wavelength (λ) in micrometers.

5. The last scale reads the optical line rate (R_o) in bits per second.

6. In the example, a line (1) is drawn between known values on scale #1 (photons per pulse) and scale #4 (wavelength). A second line (2) is then drawn from the intersection of line #1 and scale #2, to a known optical line rate value on the last scale (R_o). The intersection of line #2 and scale #3 gives the input power required at the receiver.

Downloaded from http://www.everyspec.com

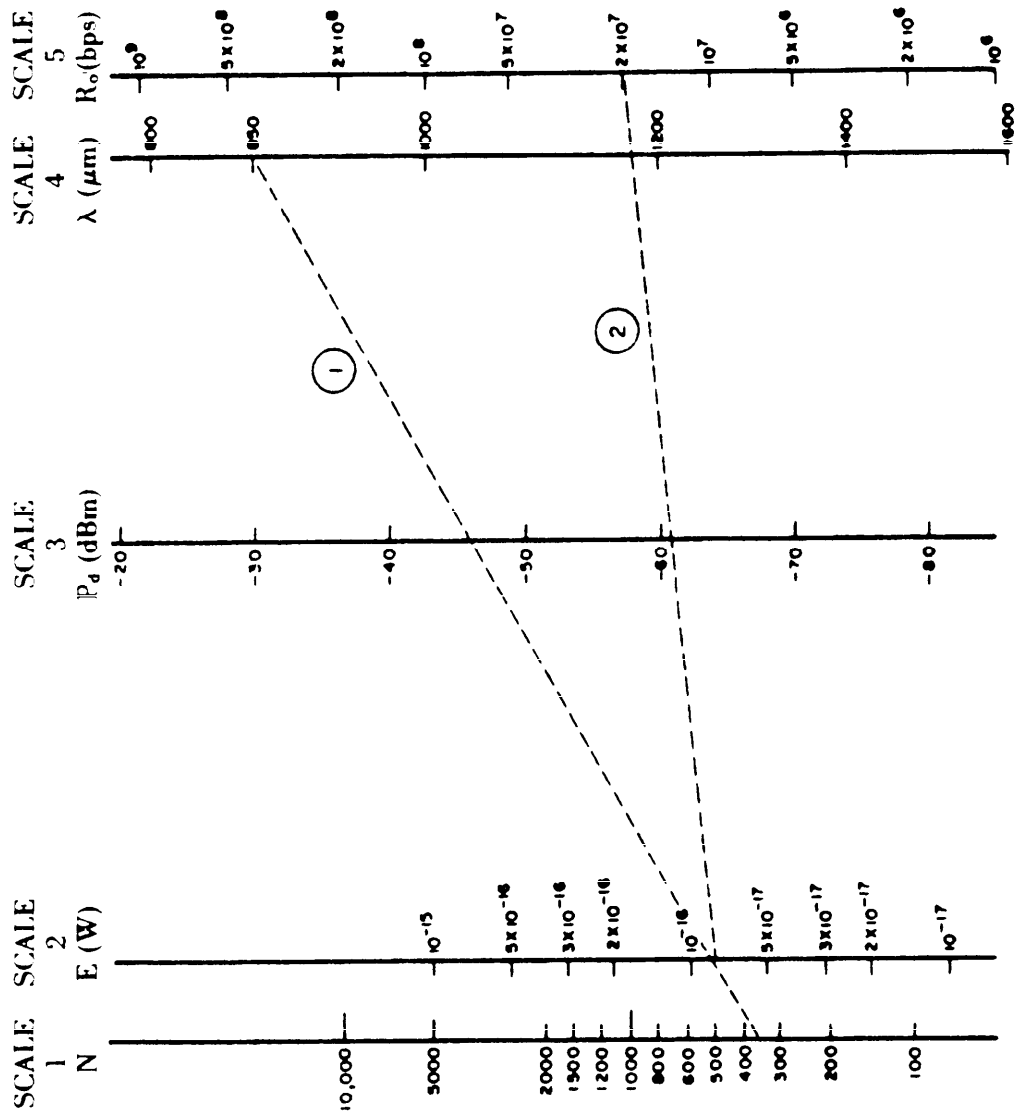

FIGURE A-1. Nomograph for determining required receiver power for digital links as a function of photons/pulse and wavelength.

Downloaded from http://www.everyspec.com

20.1.4 **Receiver noise with PIN photodiode.** If the detector is a PIN photodiode, thermal noise in the electronic amplifier is the controlling receiver noise. The PIN photodiode has no internal gain to provide a high signal input to the electronic amplifier and thereby reduce the effect of the thermal noise. By the same token, the PIN photodiode does not introduce significant noise. Its only noise output is quantum noise and its quantum limit is so far below the receiver noise threshold (10 to 13 dB below) that it is negligible for link design purposes.

20.1.5 **Receiver noise with APD.** An APD provides signal gain which reduces the effect of the electronic amplifier thermal noise. In so doing, however, it introduces avalanching or APD noise. Avalanching occurs when electrons moving in the photodiode internal field generate hole-electron pairs and the "new" electrons do the same, in a sort of chain reaction. The statistical uncertainties of avalanching, however, corrupt the output signal. This APD noise power is taken into account in link design by a dimensionless quantity called "noise factor." The noise factor is a measure of the degradation in SNR produced by avalanching. It increases with avalanching gain and there is a point of diminishing returns beyond which further increases in gain do not provide any increase in receiver output SNR. The gain at this point is the optimum gain for the receiver.

20.1.6 **Relationship between gain and noise factor.** Gain (G) and noise factor (F) for an APD are related by ionization ratio (i), a measure of the characteristic that causes avalanching.

$$F = iG + (2-1/G)\ (1-i) \qquad \text{(Equation A-3)}$$

Figure A-2 gives F as a function of G with i as a parameter. If i is not known, the mid-range values of 0.1 or 0.05 will give reasonable results. (The gain and noise factor for PIN photodiodes are both generally taken as unity.)

20.1.7 **Receiver figure of merit.** Because of the current rapid development of fiber optics as a communications medium, there is little commonality among manufacturers regarding which performance parameters are specified. This is particularly true of receiver noise performance. One useful approach proposes a receiver "figure of merit." (See S. D. Personick.) This figure of merit is given the symbol, Z, and defined as the ratio of rms output noise to the response produced by a single hole-electron pair. Besides its usefulness as a common way of stating receiver noise performance, it assists in link design by effectively combining a number of receiver component variables whose real values are not normally available to the system engineer. From the manufacturers' point of view it has the advantage of being easily measured.

20.1.8 **Calculation of figure of merit.** In the absence of a manufacturer-specified figure of merit, it can be calculated using the concept of equivalent load resistance, R_l.

a. R_l is a real resistance only in the case of an electronic amplifier with a resistive input. Most amplifiers in fiber optic applications have field-effect-transistor (FET), bipolar, or transimpedance front ends. Such front ends have complex input circuitry utilizing resistors, capacitors, and transistors. The input circuitry introduces the shot noise component of thermal noise.

b. Rarely does the link designer have access to the details of amplifier front-end circuitry. The equivalent load resistance concept provides a way around this lack of information, even though, ideally, it must be supplied by the manufacturer. Equivalent load resistance is defined as the load resistance that would produce a noise current equivalent to the sum of all the noise currents produced in the front-end components, e.g. feedback resistor and transistors. It includes the effect of gain in the transistors. (For further discussion of the equivalent load resistance concept, see S. D. Personick, page 95.)

Downloaded from http://www.everyspec.com

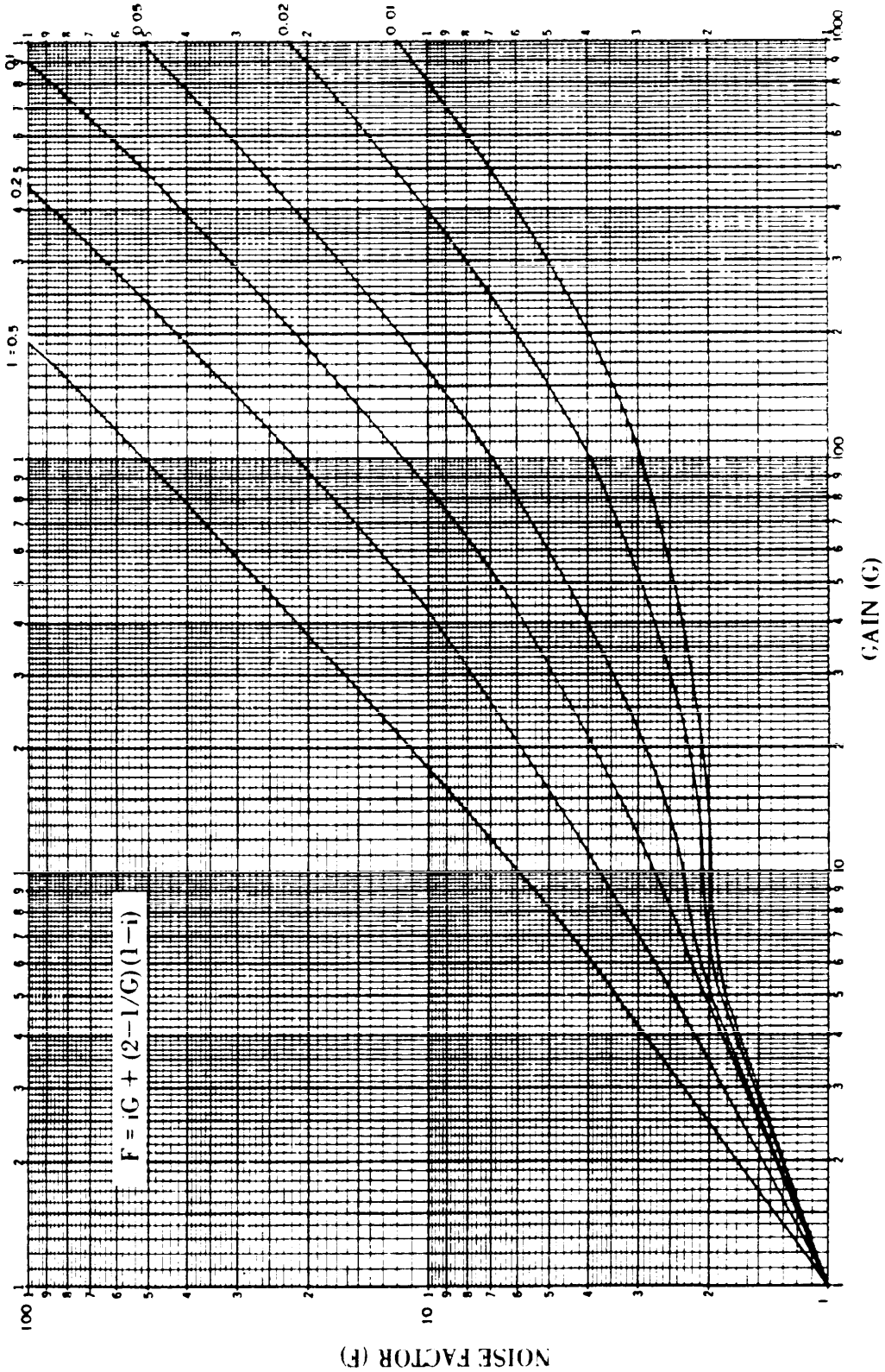

FIGURE A-2. Detector noise factor.

Downloaded from http://www.everyspec.com

c. Using the equivalent load resistance, R_l, the receiver figure of merit, Z, can be found from the equation

$$Z = \sqrt{4kTB/R_l}/eB \qquad \text{(Equation A-4)}$$

where

k = Boltzman's constant (1.38×10^{-23} joules/K)

T = temperature in kelvins (room temperature is taken as 290 kelvins)

e = the charge on an electron (1.6×10^{-19} coulombs)

B = amplifier 3-dB bandwidth (Hz) (from manufacturer)

Z is tabulated in table A-I for common fiber optic bandwidths and a range of R_l. If R_l is not specified, it is reasonable to assume a value of 10,000 ohms.

20.2 **Calculation of the number of photons per pulse.** A reasonably straight-forward calculation of the number of photons per pulse required to provide a specific BER involves an approximation referred to as a Gaussian approximation. The Gaussian approximation assumes that the output voltage resulting from an optical pulse sequence input is a Gaussian random variable. Thus, the error probability can be calculated from knowledge of the mean and standard deviation of the output voltage. With the additional assumption of perfect extinction (no light incident on the detector input during a pulse "off" state), a simple relationship yielding the number, N, of photons per pulse can be derived:

$$N = x^2F + 2x(Z/G) \qquad \text{(Equation A-5)}$$

where x is the number of standard deviations in the Gaussian probability distribution corresponding to a specific BER. For a BER of 10^{-9}, x is 6.29 and the equation becomes

$$N = 39.6F + 12.6(Z/G) \qquad \text{(Equation A-6)}$$

Table A-II gives the number of standard deviations for other BER's. Figure A-3 gives N for the ratio Z/G with F as a parameter, for a BER of 10^{-9}.

Downloaded from http://www.everyspec.com

TABLE A-I. Fiber optic receiver figure of merit, Z, as a function of bandwidth, B, and equivalent load resistance, R_l.

B (MHz)	R_l (ohms)	Z
10	50	35,364
10	100	25,006
10	1,000	7,907
10	10,000	2,500
10	100,000	790
25	50	22,366
25	100	15,815
25	1,000	5,001
25	10,000	1,581
25	100,000	500
50	50	15,815
50	100	11,183
50	1,000	3,536
50	10,000	1,118
50	100,000	353
100	50	11,183
100	100	7,907
100	1,000	2,500
100	10,000	790
100	100,000	250

Downloaded from http://www.everyspec.com

TABLE A-II. Number, x, of standard deviations for BER's.

BER	x
1.76×10^{-8}	5.82
1.66×10^{-8}	5.83
1.57×10^{-8}	5.84
1.48×10^{-8}	5.85
1.39×10^{-8}	5.86
1.31×10^{-8}	5.87
1.24×10^{-8}	5.88
1.17×10^{-8}	5.89
1.10×10^{-8}	5.90
1.04×10^{-8}	5.91
9.79×10^{-9}	5.92
9.22×10^{-9}	5.93
8.69×10^{-9}	5.94
8.19×10^{-9}	5.95
7.72×10^{-9}	5.96
7.27×10^{-9}	5.97
6.85×10^{-9}	5.98
6.45×10^{-9}	5.99
6.08×10^{-9}	6.00
5.72×10^{-9}	6.01
5.39×10^{-9}	6.02
5.07×10^{-9}	6.03
4.78×10^{-9}	6.04
4.50×10^{-9}	6.05
4.23×10^{-9}	6.06
3.98×10^{-9}	6.07
3.75×10^{-9}	6.08
3.53×10^{-9}	6.09
3.32×10^{-9}	6.10
3.12×10^{-9}	6.11
2.94×10^{-9}	6.12
2.76×10^{-9}	6.13
2.60×10^{-9}	6.14
2.44×10^{-9}	6.15
2.30×10^{-9}	6.16
2.16×10^{-9}	6.17
2.03×10^{-9}	6.18
1.91×10^{-9}	6.19
1.79×10^{-9}	6.20
1.69×10^{-9}	6.21
1.58×10^{-9}	6.22
1.49×10^{-9}	6.23
1.40×10^{-9}	6.24
1.31×10^{-9}	6.25
1.23×10^{-9}	6.26
1.16×10^{-9}	6.27

Downloaded from http://www.everyspec.com

TABLE A-II. Number, x, of standard deviations for BER's (continued).

BER	x
1.09×10^{-9}	6.28
1.02×10^{-9}	6.29
9.60×10^{-10}	6.30
9.01×10^{-10}	6.31
8.46×10^{-10}	6.32
7.94×10^{-10}	6.33
7.46×10^{-10}	6.34
7.00×10^{-10}	6.35
6.57×10^{-10}	6.36
6.16×10^{-10}	6.37
5.78×10^{-10}	6.38
5.42×10^{-10}	6.39
5.09×10^{-10}	6.40
4.77×10^{-10}	6.41
4.48×10^{-10}	6.42
4.20×10^{-10}	6.43
3.94×10^{-10}	6.44
3.69×10^{-10}	6.45
3.46×10^{-10}	6.46
3.24×10^{-10}	6.47
3.04×10^{-10}	6.48
2.85×10^{-10}	6.49
2.67×10^{-10}	6.50
2.50×10^{-10}	6.51
2.34×10^{-10}	6.52
2.20×10^{-10}	6.53
2.06×10^{-10}	6.54
1.93×10^{-10}	6.55
1.80×10^{-10}	6.56
1.69×10^{-10}	6.57
1.58×10^{-10}	6.58
1.48×10^{-10}	6.59
1.39×10^{-10}	6.60
1.30×10^{-10}	6.61
1.21×10^{-10}	6.62
1.14×10^{-10}	6.63
1.06×10^{-10}	6.64
9.96×10^{-11}	6.65

Downloaded from http://www.everyspec.com

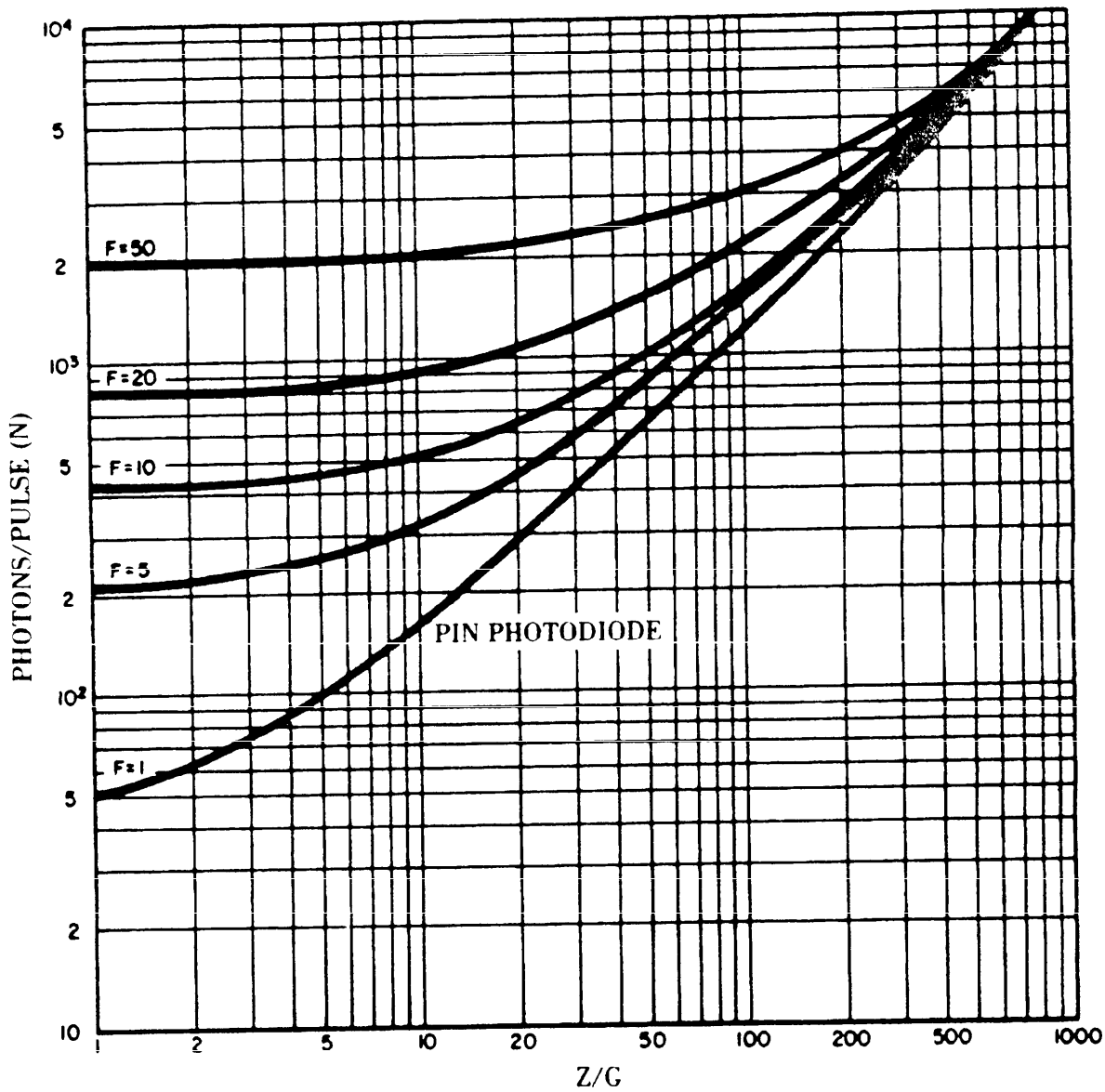

$N = x^2F + 2x\ (Z/G)$

$BER = 10^{-9}$

FIGURE A-3. Photons/pulse as a function of Z/G and F.

Downloaded from http://www.everyspec.com

APPENDIX B

CALCULATION OF REQUIRED DETECTOR INPUT POWER FOR ANALOG LINKS

10. **General.** This appendix presents a method and supporting theory for calculating the detector input power required for a specified SNR.

20. **Detector input for analog links.** Although the required SNR determines the power required at the detector input, the nonlinear equation used to express this relationship (equation B-1, below) can be solved for P_d only through a successive substitution process such as the Newton-Raphson Method. The less cumbersome graphical solution is sufficiently accurate for system design purposes and is used here.

$$SNR = (k_m P_d/hf)^2/\{(2P_d BF/hf) + (2ZB/G)^2\} \qquad \text{(Equation B-1)}$$

where

k_m = modulation index
P_d = power required at the detector
h = Planck's constant = 6.626×10^{-34} joule-sec.
f = optical frequency = (3×10^8 meters per second/wavelength (m)) Hz
B = 3-dB bandwidth of electronic amplifier (Hz)
F = detector noise factor (1 for PIN diodes)
Z = receiver order of merit (see paragraph 20.1.7, Appendix A)
G = gain of photodetector (1 for PIN diodes)

20.1 **SNR for PIN photodiodes.** Thermal noise from the electronic amplifier controls SNR for PIN photodiode detectors up to an SNR of approximately 40 dB. At that point the influence of quantum noise commences. Figure B-1 is a graph of SNR versus P_d with bandwidth as a parameter. It assumes a modulation index, k_m, of 0.7, which is typical for amplitude modulation, i.e., intensity modulation of the optical source. The graph also assumes an equivalent load resistance of 10K ohms. This quantity is not included directly in equation B-1, but is inherent in the receiver figure of merit, Z (see table A-I). The graph is based on an operating wavelength of 850 nm.

20.1.1 **Adjustment for modulation index.** Modulation indexes in amplitude modulation range in practice from 0.5 to 1.0. (Frequency modulation is treated later under 20.3.) To adjust the SNR value for a modulation index other than 0.7, add the value indicated below to the value in the graph, figure B-1.

a. For k_m = 0.5: −2.9 dB
b. For k_m = 1.0: +3.1 dB

20.1.2 **Adjustment for equivalent load resistance.** In appendix A, table A-1, Z is given for load resistance of 50, 100, 1,000, 10,000, and 100,000 ohms. SNR readings from figure B-1 are based on an equivalent load resistance of 10,000 ohms. For a power of 10 increase in load resistance from 10,000 ohms, add 10 dB to the SNR read from the graph; for each power of 10 decrease, subtract 10 dB.

Downloaded from http://www.everyspec.com

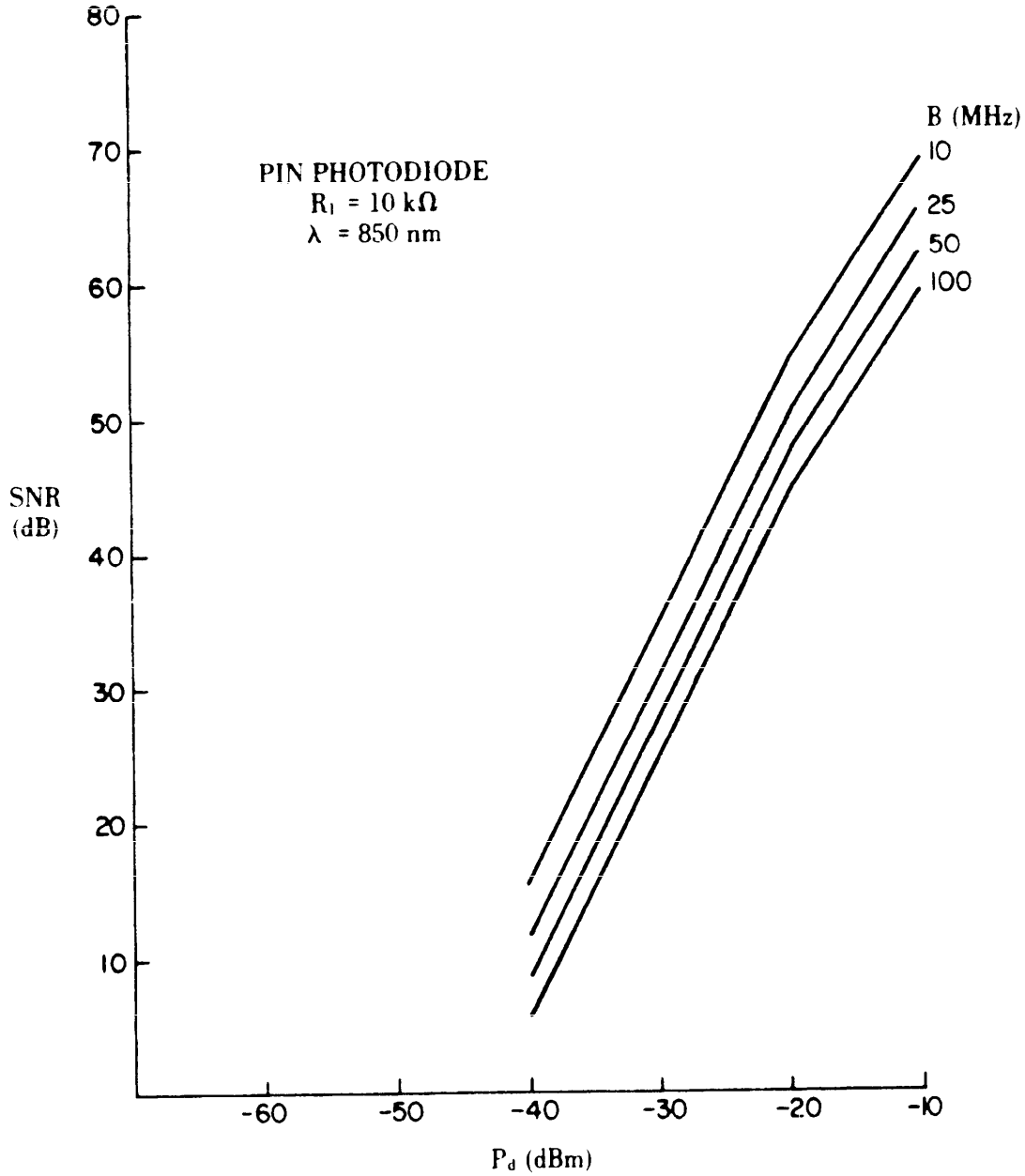

FIGURE B-1. SNR as a function of signal power, PIN photodiode.

Downloaded from http://www.everyspec.com

20.1.3 **Adjustment for wavelength.** For operating wavelengths other than 850 nm, make the following adjustments to SNR values:

a. 790 nm: −0.4 dB
b. 1000 nm: +0.7 dB
c. 1300 nm: +1.9 dB
d. 1600 nm: +2.8 dB

20.2 **SNR for avalanche photodiodes.** In normal receivers using APD's, the APD noise factor controls SNR when optimal gain is applied. Optimal gain ranges from 50 to 100 in most cases. Figure B-2 is a graph of SNR versus P_d with bandwidth as a parameter. It assumes a modulation index, k_m, of 0.7; a gain, G, of 100; a noise factor, F, of 7; and an operating wavelength of 850 nm. SNR for APD's is insensitive to variations in load resistance and, hence, receiver figure of merit, Z. It is also relatively insensitive to G. It is sensitive to F, however, which is related to G.

20.2.1 **Adjustment for modulation index.** To correct SNR for modulation indexes other than 0.7, make the following adjustments:

a. For k_m = 0.5: −3.0 dB
b. For k_m = 1.0: +3.0 dB

20.2.2 **Adjustment for APD noise factor.** SNR varies with APD noise factor, F. Figure B-3 gives the SNR adjustment in the form of relative SNR, with SNR normalized to 1 dB at F = 3.

20.2.3 **Adjustment for wavelength.** For wavelengths other than 850 nm, make the same adjustments as in 20.1.3:

a. 790 nm: −0.4 dB
b. 1000 nm: +0.7 dB
c. 1300 nm: +1.9 dB
d. 1600 nm: +2.8 dB

20.3 **Bandwidth expansion techniques.** Bandwidth expansion techniques such as frequency modulation (FM), pulse-position modulation (PPM), and pulse-duration modulation (PDM) provide significant improvements in SNR over direct intensity modulation (IM).

20.3.1 **Frequency modulation.** Frequency modulation is applied to fiber optics links as subcarrier FM-IM; that is, the optical source intensity is modulated by an FM subcarrier. This method provides an SNR improvement in direct proportion to the bandwidth expansion. The typical bandwidth expansion is a factor of 3, resulting in an SNR improvement of almost 10 dB.

20.3.2 **Pulsed analog modulation.** The improvement in SNR due to PPM and PDM is more difficult to determine. Exact performance depends on whether a PIN or an APD detector is used, whether the transmitter is peak power limited or average power limited, whether the fiber bandwidth is the limiting factor, and other variables. Because of the wide variations encountered, SNR improvements due to these modulation methods must be quoted by the manufacturer.

Downloaded from http://www.everyspec.com

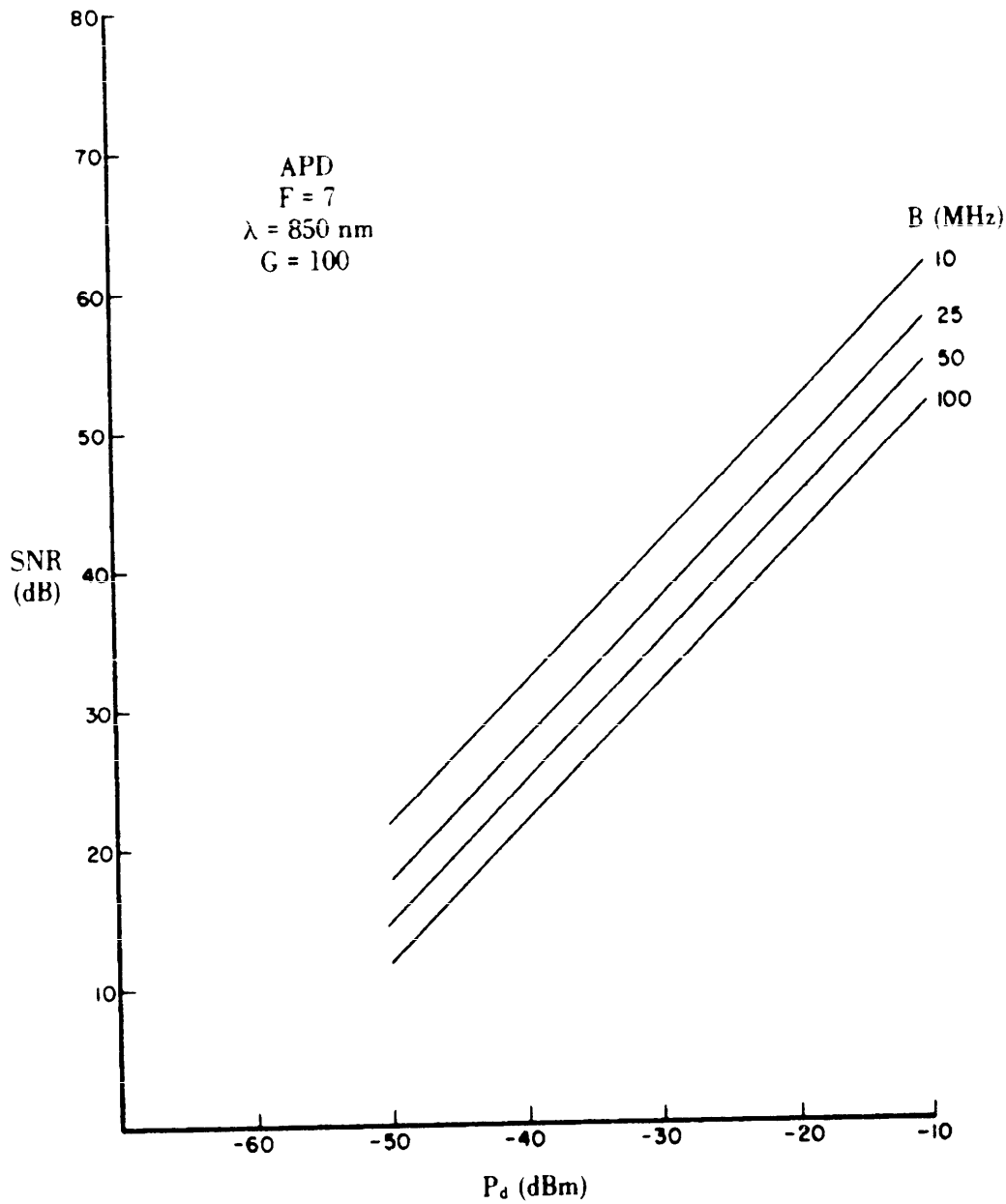

FIGURE B-2. SNR as a function of signal power, APD.

Downloaded from http://www.everyspec.com

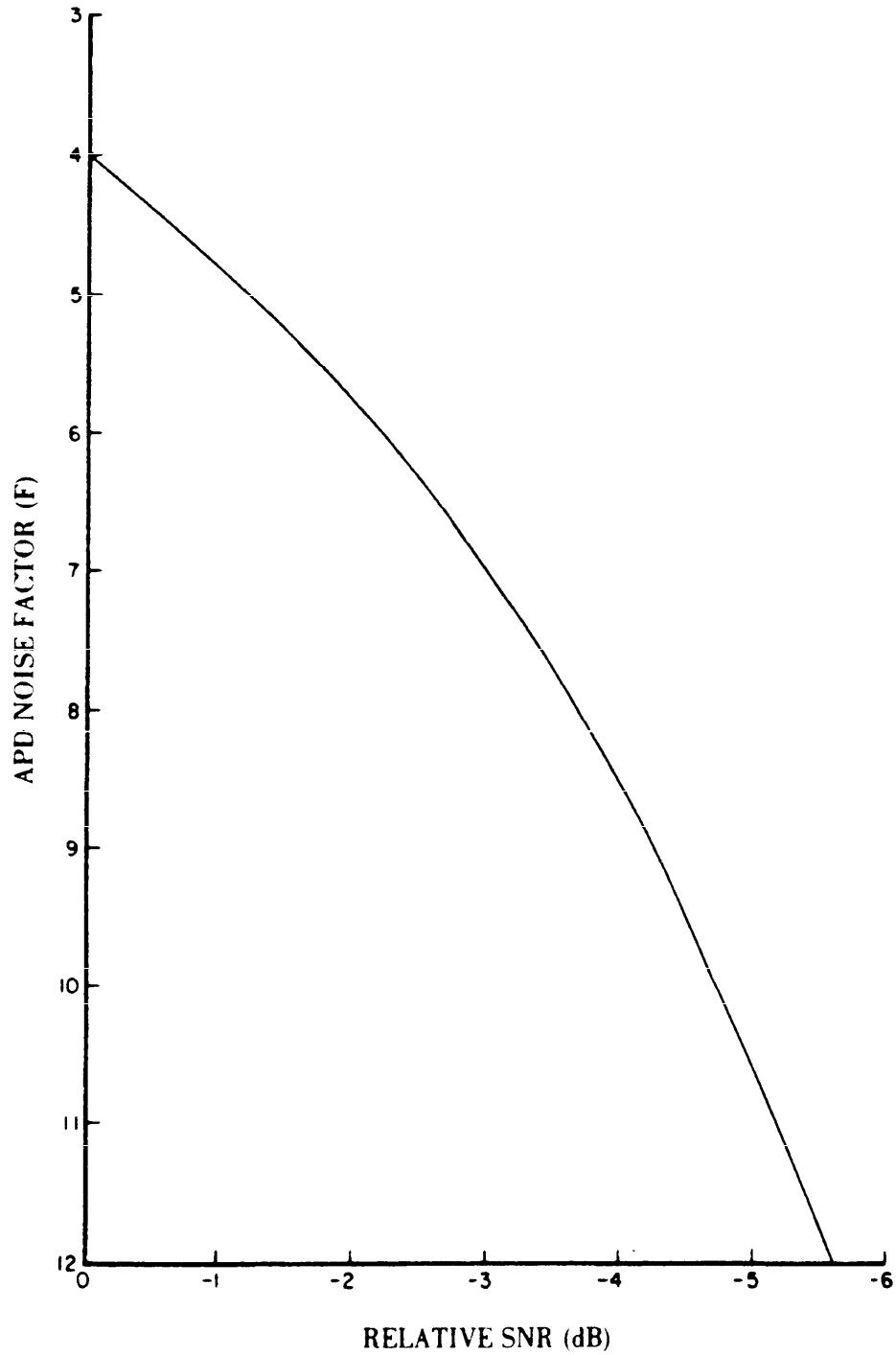

FIGURE B-3. SNR adjustment for APD noise factor, F.

Downloaded from http://www.everyspec.com

APPENDIX C

LINK DESIGN

COMPUTER

PROGRAM LISTING

Downloaded from http://www.everyspec.com


```
1   REM**  FODSGN.BAS                    OCTOBER 15. 1984
2   REM**  MAIN PROGRAM
3   REM
4   REM**  THE MAIN PROGRAM COMPUTES A FIBER OPTIC DIGITAL LINK OR SPAN
       POWER
5   REM**  BUDGET AND THE CORRESPONDING RISE TIME AND JITTER PARAMETERS.
6   REM
7   REM**  REF.  MIL-HDBK-415. DESIGN HANDBOOK FOR FIBER OPTIC
       COMMUNICATION
8   REM**  SYSTEMS.
9   REM
10   REM** IDENTIFIERS:
11   REM**  A  = ATTENUATION OF FIBER. DB/KM
12   REM**  B  = BANDWIDTH-DISTANCE FACTOR OF MULTIMODE FIBER. MHZ-KM
13   REM**  D  = DYNAMIC RANGE OF RECEIVER. DB
14   REM**  D1 = MATERIAL DISPERSION COEFFICIENT OF FIBER. NS/NM-KM
15   REM**  J1 = CALCULATED SPAN JITTER. NS
16   REM**  J2 = CALCULATED MULTISPAN LINK JITTER. NS
17   REM**  K1 = CALCULATED MAXIMUM SPAN LENGTH. KM
18   REM**  K2 = CALCULATED MINIMUM SPAN LENGTH. KM
19   REM**  L  = LINK LOSS (POWER BUDGET). DB
20   REM**  L1 = LOSS PER CONNECTOR. DB
21   REM**  L2 = LOSS PER SPLICE
22   REM**  M  = POWER MARGIN. DB
23   REM**  N1 = NUMBER OF CONNECTORS IN LINK OR SPAN
24   REM**  N2 = NUMBER OF SPLICES IN LINK OR SPAN
25   REM**  P  = OPTICAL SOURCE POWER OUTPUT COUPLED TO FIBER. DBM
26   REM**  P1 = REQUIRED DETECTOR INPUT POWER. DBM
27   REM**  T1 = TRANSMITTER RISE TIME. NS
28   REM**  T2 = RECEIVER RISE TIME. NS
29   REM**  T3 = RISE TIME DUE TO FIBER MATERIAL DISPERSION. NS
30   REM**  T4 = RISE TIME DUE TO INTERMODAL FIBER MULTIMODE DISTORTION.
NS
31   REM**  T5 = SPAN RISE TIME. NS
40   REM**  GET THE DATA
50       GOSUB 500 : REM**  TO INPUT ROUTINE
60   REM**  POWER BUDGET
70     LET L = P - P1 - M - N1*L1 - N2*L2
80   REM**  MAXIMUM LENGTH CALCULATION
90     LET K1 = L/A
100  REM**  MINIMUM LENGTH CALCULATION
110    LET K2 = (L + M - D)/A
120  REM**  RISE TIME DUE TO FIBER MATERIAL DISPERSION CALCULATION
130    T3 = D1*W1*K1
140  REM**  RISE TIME DUE TO MULTIMODE DISTORTION CALCULATION
150      IF F$ <> "SM" THEN 180
160    LET T4 = 0
170      GOTO 190
```

Downloaded from http://www.everyspec.com


```
180    LET T4 = 350*K1/B
190  REM**  SPAN RISE TIME CALCULATION
200    LET T5 = 1.1*SQR(T1^2 + T2^2 + T3^2 + T4^2)
210  REM**  SPAN JITTER CALCULATION
220    LET J1 = T5/12 : REM**   ASSUMES VOLTAGE SNR OF 12 (21.6 DB)
222  REM**   NUMBER OF SPANS IN LINK
224    LET N = K/K1
226  REM
230  REM**  MULTISPAN LINK JITTER CALCULATION
240    LET J2 = SQR(ABS(K/K1))*J1
250  REM**  END OF MAIN PROGRAM
255      RETURN
500  REM**  INPUT ROUTINE
501  REM
502  REM**  THIS ROUTINE PROVIDES DIALOG WITH THE USER TO INPUT THE DATA
503  REM**  REQUIRED FOR THE DESIGN CALCULATIONS.  THE SEQUENCE OF THE
504  REM**  QUESTIONS IS BASED ON THE ARRANGEMENT OF THE WORKSHEETS IN
505  REM**  APPENDIX D. MIL-HDBK-415.  THE DIALOG IS ARRANGED FOR
506  REM**  AN 80-COLUMN. 24-LINE DISPLAY.
507  REM
508  REM** IDENTIFIERS:
509  REM**   A  = ATTENUATION OF FIBER. DB/KM
510  REM**   B  = BANDWIDTH-DISTANCE FACTOR OF MULTIMODE FIBER. MHZ-KM
511  REM**   D  = DYNAMIC RANGE OF RECEIVER. DB
512  REM**   D1 = MATERIAL DISPERSION COEFFICIENT OF FIBER. NS/NM-KM
513  REM**   E  = BER
514  REM**   E1 = ENERGY PER PULSE FOR BER AND R. WATTS/PULSE
515  REM**   F  = RECEIVER NOISE FACTOR (RATIO)
516  REM**   G  = RECEIVER GAIN (RATIO)
517  REM**   I  = APD IONIZATION RATIO
518  REM**   J  = JITTER SPECIFICATION. NS
519  REM**   K  = LINK OR SPAN LENGTH SPECIFICATION, KM
520  REM**   L1 = OPTICAL POWER LOSS PER CONNECTOR. DB
521  REM**   L2 = OPTICAL POWER LOSS PER SPLICE. DB
522  REM**   M  = POWER MARGIN STANDARD OR SPECIFICATION. DB
523  REM**   N1 = NUMBER OF CONNECTORS IN LINK OR SPAN
524  REM**   N2 = NUMBER OF SPLICES IN LINK OR SPAN
525  REM**   P  = OPTICAL SOURCE POWER OUTPUT COUPLED TO FIBER, DBM
526  REM**   P1 = REQUIRED DETECTOR INPUT POWER, DBM
527  REM**   R  = OPTICAL LINE RATE, MBITS/SEC
528  REM**   R1 = RECEIVER AMPLIFIER EQUIVALENT LOAD RESISTANCE, OHMS
529  REM**   T  = LINK OR SPAN RISE TIME LIMIT. NS
530  REM**   T1 = TRANSMITTER RISE TIME. NS
531  REM**   T2 = RECEIVER RISE TIME. NS
532  REM**   T3 = RISE TIME DUE TO FIBER MATERIAL DISPERSION. NS
533  REM**   T4 = RISE TIME DUE TO MULTIMODE FIBER MULTIMODE DISTORTION,
       NS
534  REM**   W  = WAVELENGTH OF OPTICAL SOURCE. NM
```

Downloaded from http://www.everyspec.com


```
535  REM**    W1 = OPTICAL SOURCE OUTPUT LINEWIDTH, NM
536  REM**    A$ = LINK IDENTIFICATION
537  REM**    B$ = NAME OF EAST (FROM) TERMINAL
538  REM**    C$ = NAME OF WEST (TO) TERMINAL
539  REM**    D$ = NAME OF ANALYST
540  REM**    E$ = DATE OF ANALYSIS
541  REM**    F$ = TYPE OF FIBER (GI OR SM)
542  REM**    G$ = HEADING INPUT DECISION
543  REM**    H$ = MIL-STD-188-111 DECISION
544  REM**    I$ = TACTICAL LINK DECISION
545  REM**    J$ = DESIGN OBJECTIVE DECISION
546  REM**    K$ = RETURN TO PROGRAM AFTER DISPLAY
547  REM**    L$ = MIL-HDBK-415 COMPONENTS SELECTION DECISION
548  REM**    M$ = MIL-HDBK-415 COMPONENTS SELECTION DISPLAY DECISION
549  REM**    N$ = MIL-HDBK-415 COMPONENTS SELECTION PRINTOUT DECISION
550  REM**    O$ = MIL-HDBK-415 RISE TIME AND JITTER DECISION
551  REM**    R$ = TYPE OF OPTICAL DETECTOR (PIN OR APD)
552  REM**    T$ = TYPE OF OPTICAL SOURCE (LED OR LD)
553  REM
555  REM**    LINK DESIGN WORKSHEET ENTRIES
560    PRINT TAB(18);"MIL-HDBK-415 FIBER OPTIC LINK DESIGN PROGRAM"
561    PRINT
562    PRINT "THIS PROGRAM IS FOR USE IN THE DESIGN OF DIGITAL FIBER
     OPTIC"
563    PRINT "LINKS.  THE USER MAY SELECT DESIGN IN ACCORDANCE WITH"
564    PRINT "MIL-STD-188-111 OR INPUT OTHER DESIGN GOALS.  THE USER
     MAY"
565    PRINT "ALSO CHOOSE A MIL-HDBK-415 SELECTION OF FIRST ITERATION"
566    PRINT "COMPONENTS OR INPUT HIS OWN SELECTION.  THE USER MAY
     ELECT"
567    PRINT "TO INPUT WORKSHEET HEADING DATA FOR FORMAL DOCUMENTATION"
568    PRINT "PURPOSES. OR LEAVE IT OUT FOR MORE RAPID INPUTTING."
569    PRINT
570    PRINT "GIVE 'YES' OR 'NO' ANSWERS AS 'Y' OR 'N' AND PRESS
     'RETURN'"
571    PRINT "AFTER EACH RESPONSE.  FOR A 'NO RESPONSE' ENTRY. PRESS"
572    PRINT "'RETURN' AND THE PROGRAM WILL MOVE ON TO THE NEXT PROMPT."
573    PRINT
574    INPUT "PRESS 'RETURN.' ";V$
575    PRINT CHR$(26)
580  REM**    WORKSHEET HEADING INFORMATION
590    INPUT "WILL YOU ENTER HEADING INFORMATION";G$
600      IF G$ <> "Y" AND G$ <> "N" THEN 590
610      IF G$ = "N" THEN 710 : REM**GO TO LINK REQUIREMENTS INPUT
620    PRINT
630    PRINT "HEADING INFORMATION FOR WORKSHEET"
640    PRINT
650    INPUT "ENTER LINK IDENTIFICATION. ";A$
```

Downloaded from http://www.everyspec.com


```
660    INPUT "ENTER NAME OF EAST (FROM) TERMINAL. ",B$
670    INPUT "ENTER NAME OF WEST (TO) TERMINAL. ",C$
680    INPUT "ENTER NAME OF ANALYST. ",D$
690    INPUT "ENTER DATE OF ANALYSIS. ",E$
700    PRINT
710  REM**   LINK REQUIREMENTS INFORMATION
720  REM
730    PRINT "LINK REQUIREMENTS"
740    PRINT
750    INPUT "WILL THIS BE A MIL-STD-188-111 LINK":H$
752      IF H$ <> "Y" AND H$ <> "N" THEN 750
754      IF H$ = "N" THEN 780 : REM**   SKIP STANDARDS AND TACTICAL
     QUESTIONS
756    INPUT "WILL YOU USE MINIMUM STANDARDS (MS) OR DESIGN OBJECTIVES
     (DO)":J$
758      IF J$ <> "MS" AND J$ <> "DO" THEN GOTO 756
760      IF H$ = "N" THEN 780 : REM**   SKIP TACTICAL QUESTION
770    INPUT "WILL THIS BE A TACTICAL LINK":I$
772      IF I$ <> "Y" AND I$ <> "N" THEN 770
780    INPUT "ENTER LINK LENGTH IN KM. ",K
790    INPUT "ENTER OPTICAL LINE RATE IN MBITS/SEC. ",R
800      IF H$ = "Y" THEN 825 : SKIP BER AND POWER MARGIN PROMPTS
810    INPUT "ENTER THE MAXIMUM ALLOWABLE BER. ",E
820    INPUT "ENTER THE REQUIRED POWER MARGIN IN DB. ",M
825  REM**   GET BER FOR MIL-STD TACTICAL LINK OF LENGTH K
830      IF H$ = "Y" AND I$ = "Y" AND J$ = "MS" THEN GOSUB 7530
835  REM**   GET DO BER FOR MIL-STD TACTICAL LINK OF LENGTH K
840      IF H$ = "Y" AND I$ = "Y" AND J$ = "DO" THEN GOSUB 7560
845  REM**   GET BER FOR MIL-STD NONTACTICAL LINK OF LENGTH K
850      IF H$ = "Y" AND I$ = "N" THEN GOSUB 7590
855  REM**   GET M FOR MIL-STD LINK
860      IF H$ = "Y" AND J$ = "MS" THEN GOSUB 7620
865  REM**   GET DO M FOR MIL-STD LINK
870      IF H$ = "Y" AND J$ = "DO" THEN GOSUB 7650
875  REM**   GET MIL-STD DYNAMIC RANGE
880      IF H$ = "Y" THEN GOSUB 7680
882    PRINT
884    PRINT
890    PRINT "MIL-STD-188-111 DOES NOT SPECIFY LINK RISE TIME OR
     JITTER. BUT"
891    PRINT "MIL-HDBK-415 SUGGESTS A RISE TIME NOT TO EXCEED 70% OF A
     DATA"
892    PRINT "UNIT INTERVAL (0.7 X 1/OPTICAL LINE RATE).  MIL-HDBK-415
     ALSO"
893    PRINT "SUGGESTS END-TO-END JITTER NOT TO EXCEED 3.5% OF A DATA
     UNIT"
894    PRINT "INTERVAL (0.035 X 1/OPTICAL LINE RATE)."
900    INPUT "WILL YOU USE THE MIL-HDBK-415 SUGGESTED VALUES":O$
```

Downloaded from http://www.everyspec.com


```
910       IF O$ = "Y" THEN 950 : REM**   SKIP RISE TIME AND JITTER
     PROMPTS
920     INPUT "ENTER THE ALLOWABLE LINK OR SPAN RISE TIME IN NS. ",T
930     INPUT "ENTER THE ALLOWABLE LINK JITTER IN NS. ",J
940       GOTO 970 : REM**   PASS OVER MIL-HDBK-415 RISE TIME AND JITTER
950  REM**   GET MIL-HDBK RISE TIME FOR OPTICAL LINE RATE R
960       IF O$ = "Y" THEN GOSUB 7710
970  REM**   GET MIL-HDBK JITTER FOR OPTICAL LINE RATE R
980       IF O$ = "Y" THEN GOSUB 7740
990  REM
1000  REM**   FIRST ITERATION COMPONENT SELECTIONS
1001    PRINT
1002    PRINT "MIL-HDBK-415 PROVIDES GUIDANCE FOR COMPONENT
      SELECTION."
1003    PRINT "THIS PROGRAM PROVIDES A FIRST ITERATION COMPONENT
      SELECTION"
1004    PRINT "BASED ON THE MIL-HDBK-415 GUIDANCE.  DO YOU WISH TO SEE
      THAT"
1005    PRINT "SELECTION AND THE CORRESPONDING DESIGN PARAMETERS
      BEFORE"
1006    INPUT "PROCEEDING":M$
1010      IF M$ = "N" THEN GOTO 1040 : REM**   GO TO ALTERNATIVE
      COMPONENT SELECTION QUESTION
1020      GOSUB 2000 : REM**   GET THE DATA
1025      GOSUB 60 : REM**   TO LINK PARAMETERS CALCULATIONS
1030      GOSUB 4000 : REM**   DISPLAY THE DATA
1040    PRINT
1042    INPUT "DO YOU WISH TO USE THE ABOVE SELECTION":U$
1044      IF U$ = "Y" THEN GOTO 1070
1050    INPUT "DO YOU WISH TO ENTER OTHER COMPONENTS OR PARAMETERS":L$
1060      IF L$ = "Y" THEN 1090 : REM**   TO ALTERNATIVE COMPONENT
      SELECTION
1070    INPUT "DO YOU WISH A REPORT PRINTOUT";N$
1080      IF N$ = "Y" THEN 5000 : REM**   PRINTOUT THE REPORT
1085      GOTO 9999 : REM**   END OF RUN
1090    PRINT
1100    PRINT "ALTERNATIVE COMPONENT SELECTION:"
1110    INPUT "ENTER THE WAVELENGTH OF THE OPTICAL SOURCE IN NM. ",W
1120    INPUT "ENTER THE TYPE OF OPTICAL SOURCE (LED OR LD). ",T$
1130    INPUT "ENTER THE TYPE OF OPTICAL DETECTOR (PIN OR APD). ",R$
1140    INPUT "ENTER THE TYPE OF OPTICAL FIBER (GI OR SM). ",F$
1150    INPUT "ENTER OPTICAL SOURCE OUTPUT LINEWIDTH IN NM. ",W1
1160    INPUT "ENTER OPTICAL SOURCE POWER OUTPUT COUPLED TO FIBER IN
      DBM. ",P
1170    INPUT "ENTER EXPECTED TRANSMITTER RISE TIME IN NS.  ",T1
1180    INPUT "ENTER REQUIRED DETECTOR INPUT POWER IN DBM. IF KNOWN.
      ",P1
1190      IF P1 <> 0 THEN 1390 : REM**   SKIP P1 COMPUTATION
```

Downloaded from http://www.everyspec.com


```
1200    INPUT "IF P1 NOT KNOWN, ENTER RECEIVER FIGURE OF MERIT, Z. ",Z
1210      IF Z <> 0 THEN 1270 : REM**   SKIP Z CALCULATION
1220    INPUT "IF Z NOT KNOWN, ENTER EQUIVALENT LOAD RESISTANCE, R1.
      ",R1
1230      IF R1 <> 0 THEN 1260 : REM**   SKIP R1 ASSUMPTION
1240    PRINT "IF R1 NOT KNOWN, PROGRAM WILL ASSUME 10,000 OHMS."
1250    LET R1 = 10000
1260      GOSUB 8030 : REM**   CALCULATE RECEIVER FIGURE OF MERIT
1270    INPUT "ENTER DETECTOR GAIN (RATIO), G (1 FOR PIN). ",G
1280      IF G <> 0 THEN 1310 : REM**   SKIP G ASSUMPTION
1290    PRINT "IF G NOT KNOWN. PROGRAM WILL ASSUME 100."
1300    LET G = 100
1310    INPUT "ENTER RECEIVER NOISE FACTOR (RATIO). F (1 FOR PIN). ",F
1320      IF F <> 0 THEN 1380 : REM**   SKIP F CALCULATION
1330    INPUT "IF F NOT KNOWN, ENTER APD IONIZATION RATIO, I. ",I
1340      IF I <>  0 THEN 1370 : REM**   SKIP I ASSUMPTION
1350    PRINT "IF I NOT KNOWN, PROGRAM WILL ASSUME 0.1."
1360    LET I = .1
1370      GOSUB 8060 : REM**   CALCULATE RECEIVER NOISE FACTOR
1380      GOSUB 8090 : REM**   CALCULATE DETECTOR INPUT POWER REQUIRED
1390    INPUT "ENTER REQUIRED DYNAMIC RANGE IN DB. ",D
1400    INPUT "ENTER EXPECTED RECEIVER RISE TIME. ",T2
1410    INPUT "ENTER FIBER ATTENUATION IN DB/KM. ",A
1420    INPUT "ENTER FIBER MATERIAL DISPERSION COEFFICIENT IN
      NS/NM-KM. ",D1
1430      IF F$ = "SM" THEN 1450 : REM**   SKIP BANDWIDTH-DISTANCE
      FACTOR PROMPT
1440    INPUT "ENTER FIBER BANDWIDTH-DISTANCE FACTOR IN MHZ-KM. ",B
1450    INPUT "ENTER NUMBER OF CONNECTORS IN LINK OR SPAN. ",N1
1460    INPUT "ENTER ATTENUATION PER CONNECTOR IN DB. ",L1
1470    INPUT "ENTER NUMBER OF SPLICES IN LINK OR SPAN. ",N2
1480    INPUT "ENTER ATTENUATION PER SPLICE IN DB. ",L2
1482      GOTO 1025
1485      RETURN
2000  REM**  DATA RETRIEVAL ROUTINE
2010  REM
2020  REM**  COMPONENT SELECTION BY OPTICAL LINE RATE AND LINK LENGTH
2030      IF R <= 10 AND K <= 5 THEN GOSUB 6020
2040      IF R <= 10 AND K > 5 AND K < 15 THEN GOSUB 6090
2050      IF R > 10 AND R < 100 AND K <= 15 THEN GOSUB 6160
2060      IF R > 10 AND R < 100 AND K > 15 AND K <= 25 THEN GOSUB 6230
2070      IF R > 10 AND R < 100 AND K > 25 AND K <= 100 THEN GOSUB 6300
2080      IF R > 100 THEN GOSUB 6460
2090  REM
2100  REM**  OPTICAL SOURCE LINEWIDTH AS A FUNCTION OF OPERATING
       WAVELENGTH
2110      IF W = 850 AND T$ = "LED" THEN GOSUB 6630
2120      IF W = 1300 AND T$ = "LED" THEN GOSUB 6660
```

Downloaded from http://www.everyspec.com


```
2130      IF W = 850 AND T$ = "LD" THEN GOSUB 6690
2140      IF W = 1300 AND T$ = "LD" THEN GOSUB 6720
2150      IF W = 1550 THEN GOSUB 6750
2160  REM
2170  REM**  OPTICAL SOURCE OUTPUT POWER COUPLED TO FIBER
2180      IF T$ = "LED" THEN GOSUB 6790
2190      IF T$ = "LD" THEN GOSUB 6820
2200  REM
2210  REM**  TRANSMITTER RISE TIME
2220      IF T$ = "LED" THEN GOSUB 6860
2230      IF T$ = "LD" THEN GOSUB 6890
2240  REM
2250  REM**  OPTICAL DETECTOR GAIN
2260      IF R$ = "PIN" THEN GOSUB 6930
2270      IF R$ = "APD" THEN GOSUB 6960
2280  REM
2290  REM**  RECEIVER NOISE FACTOR
2300      IF R$ = "PIN" THEN GOSUB 7000
2310      IF R$ = "APD" THEN GOSUB 7030
2320  REM
2330  REM**  RECEIVER FIGURE OF MERIT
2340      GOSUB 7060
2350  REM
2352  REM**   DETECTOR INPUT POWER REQUIRED. P1
2354      GOSUB 8090
2356  REM
2360  REM**  RECEIVER RISE TIME
2370      IF R$ = "PIN" THEN GOSUB 7100
2380      IF R$ = "APD" THEN GOSUB 7130
2390  REM
2400  REM**  OPTICAL FIBER ATTENUATION
2410      IF W = 850 AND F$ = "GI" THEN GOSUB 7170
2420      IF W = 1300 AND F$ = "GI" THEN GOSUB 7200
2430      IF W = 1300 AND F$ = "SM" THEN GOSUB 7230
2440      IF W = 1550 THEN GOSUB 7260
2450   REM
2460   REM**  OPTICAL FIBER MATERIAL DISPERSION COEFFICIENT
2470      IF W = 850 THEN GOSUB 7300
2480      IF W = 1300 THEN GOSUB 7330
2490      IF W = 1550 THEN GOSUB 7360
2500   REM
2510   REM**  NUMBER OF FIBER CONNECTORS
2520      GOSUB 7390
2530   REM**  NUMBER OF FIBER SPLICES
2535      IF F$ = "GI" THEN GOTO 2550
2540      GOSUB 7420
2542      GOTO 2560
2545      GOTO 2560
```

Downloaded from http://www.everyspec.com


```
2550      GOSUB 7405
2560  REM**  CONNECTOR ATTENUATION
2570      GOSUB 7770
2580      GOTO 2610
2590  REM**  TACTICAL CONNECTOR ATTENUATION
2600      GOSUB 7800
2610  REM**  SPLICE ATTENUATION
2620      GOSUB 7830
2640  REM**   RECEIVER DYNAMIC RANGE
2650      GOSUB 7680
2660      RETURN
4000  REM**  DISPLAY ROUTINE
4001  REM**  FIRST ITERATION COMPONENT SELECTION AND RESULTS
4002  REM
4003    PRINT
4010    PRINT TAB(8) "FIBER OPTIC LINK DESIGN BASED ON MIL-STD-188-111
      AND MIL-HDBK-415"
4020    PRINT "=====================================================
      ========================="
4030    PRINT "LINK LENGTH" TAB(13) K TAB(17) "KM" TAB(20) "OPTICAL
      LINE RATE" TAB(40) R TAB(44) "MBITS/SEC" TAB(54) "BER " :E
4040    PRINT "MAXIMUM CABLE SPAN LENGTH FOR BER AND OPTICAL LINE
      RATE." TAB(67) K1 TAB(77) "KM"
4070    PRINT "MINIMUM SPAN LENGTH" TAB(67) K2 TAB(77) "KM"
4080    PRINT "ALLOWABLE RISE TIME" TAB(27) T TAB(36) "NS" TAB(40)
      "CALCULATED RISE TIME" TAB(67) T5 TAB(77) "NS"
4090    PRINT "ALLOWABLE JITTER" TAB(27) J TAB(36) "NS" TAB(40)
      "CALCULATED SPAN JITTER" TAB(67) J1 TAB(77) "NS"
4100    PRINT "SPANS/LINK" TAB(27) N TAB(40) "CALCULATED LINK JITTER"
      TAB(67) J2 TAB(77) "NS"
4110    PRINT "OPERATING WAVELENGTH" TAB(27) W TAB(36) "NM"
4120    PRINT "TYPE OF OPTICAL SOURCE" TAB(27) T$ TAB(40) "TYPE OF
      OPTICAL DETECTOR" TAB(67) R$
4130    PRINT TAB(2) "LINEWIDTH" TAB(27) W1 TAB(36) "NM" TAB(42)
      "INPUT POWER REQUIRED" TAB(67) P1 TAB(77) "DBM"
4140    PRINT TAB(2) "POWER COUPLED TO FIBER" TAB(27) P TAB(36) "DBM"
      TAB(42) "RECEIVER DYNAMIC RANGE" TAB(67) D TAB(77) "DB"
4160    PRINT TAB(2) "TRANSMITTER RISE TIME" TAB(27) T1 TAB(36) "NS"
      TAB(42) "RECEIVER RISE TIME" TAB(67) T2 TAB(77) "NS"
4170    PRINT "TYPE OF OPTICAL FIBER" TAB(27) F$
4180    PRINT TAB(2) "ATTENUATION" TAB(27) A TAB(36) "DB/KM" TAB(47)
      "NUMBER OF CONNECTORS" TAB(67) N1
4190    PRINT TAB(2) "MATERIAL DISPERSION COEF." TAB(27) D1 TAB(36)
      "NS/NM-KM" TAB(49) "LOSS PER CONNECTOR" TAB(67) L1 TAB(77) "DB"
4200      IF F$ = "SM" THEN 4220 : REM**   SKIP BANDWIDTH-DISTANCE
      FACTOR
4210    PRINT TAB(2) "BANDWIDTH-DISTANCE FACTOR" TAB(27) B TAB(36)
      "MHZ-KM"
```

Downloaded from http://www.everyspec.com


```
4220    PRINT TAB(2) "MAT DISP RISE TIME" TAB(27) T3 TAB(36) "NS"
       TAB(47) "NUMBER OF SPLICES" TAB(67) N2
4230      IF F$ = "SM" THEN 4260 : REM**   SKIP MULTIMODE DISTORTION
       RISE TIME
4240    PRINT TAB(2) "IM DIST RISE TIME" TAB(27) T4 TAB(36) "NS"
       TAB(49) "LOSS PER SPLICE" TAB(67) L2 TAB(77) "DB"
4250      GOTO 4270 : SKIP 4260
4260    PRINT TAB(49) "LOSS PER SPLICE" TAB(67) L2 TAB(77) "DB"
4270      RETURN
4440    INPUT "PRESS 'RETURN' TO RETURN TO PROGRAM.",V$
5000  REM**   REPORT PRINTOUT ROUTINE
5010  REM
5020    LPRINT
5022    LPRINT
5024    LPRINT
5030    LPRINT TAB(22) "FIBER OPTIC LINK DESIGN COMPUTATION"
5032    LPRINT "==================================================
       ============================"
5034    LPRINT
5036    LPRINT "LINK IDENTIFICATION: ";A$
5038    LPRINT "FROM:  ";B$;TAB(40);"TO: ";C$
5040    LPRINT "ANALYST: ";D$;TAB(40);"DATE: ";E$
5042    LPRINT "==================================================
       ============================"
5050      IF H$ = "Y" AND I$ = "N" THEN LPRINT "THIS IS A
       MIL-STD-188-111 LINK."
5060      IF H$ = "Y" AND I$ = "Y" THEN LPRINT "THIS IS A
       MIL-STD-188-111 TACTICAL LINK."
5070      IF H$ = "N" THEN LPRINT "THIS IS A NON-STANDARD LINK."
5080      IF J$ = "Y" THEN LPRINT "THIS LINK IS BASED ON MIL-STD-188-111
       MINIMUM PARAMETERS."
5100      IF J$ = "N" THEN LPRINT "THIS LINK IS BASED ON MIL-STD-188-111
       DESIGN OBJECTIVES."
5120    LPRINT TAB(31) "LINK REQUIREMENTS"
5130    LPRINT "LINK LENGTH" TAB(63) K TAB(77) "KM"
5140    LPRINT "POWER MARGIN" TAB(63) M TAB(77) "DB"
5150    LPRINT "DATA RATE" TAB(63) R TAB(70) "MBITS/SEC"
5160    LPRINT "ALLOWABLE BER" TAB(63) E
5170    LPRINT "ALLOWABLE RISE TIME" TAB(63) T TAB(77) "NS"
5180    LPRINT "ALLOWABLE JITTER" TAB(63) J TAB(77) "NS"
5200    LPRINT
5210    LPRINT TAB(30) "COMPONENT SELECTION"
5212      IF L$ = "N" THEN LPRINT "THIS SELECTION IS BASED ON
       MIL-HDBK-415 GUIDANCE."
5220    LPRINT "OPERATING WAVELENGTH" TAB(63) W TAB(77) "NM"
5230    LPRINT "OPTICAL SOURCE" TAB(63) T$
5240    LPRINT "OPTICAL DETECTOR" TAB(63) R$
5250    LPRINT "OPTICAL FIBER" TAB(63) F$
```

Downloaded from http://www.everyspec.com


```
5260    LPRINT TAB(29) "COMPONENT PARAMETERS"
5262      IF L$ = "N" THEN LPRINT "THESE EQUIPMENT PARAMETERS ARE BASED
       ON MIL-HDBK-415 GUIDANCE."
5270    LPRINT "OPTICAL TRANSMITTER"
5280    LPRINT " LINEWIDTH" TAB(63) W1 TAB(77) "NM"
5290    LPRINT " POWER COUPLED INTO FIBER" TAB(63) P TAB(76) "DBM"
5300    LPRINT " RISE TIME" TAB(63) T1 TAB(77) "NS"
5310    LPRINT "OPTICAL RECEIVER"
5320    LPRINT " INPUT POWER REQUIRED" TAB(63) P1 TAB(76) "DBM"
5330      IF G <> 0 THEN LPRINT " GAIN" TAB(63) G
5340      IF F <> 0 THEN LPRINT " NOISE FACTOR" TAB(63) F
5350      IF I <> 0 THEN LPRINT " IONIZATION RATIO" TAB(63) I
5360      IF Z <> 0 THEN LPRINT " FIGURE OF MERIT" TAB(63) Z
5370      IF R1 <> 0 THEN LPRINT " EQUIVALENT LOAD RESISTANCE" TAB(63)
       R1 TAB(75) "OHMS"
5380    LPRINT " DYNAMIC RANGE" TAB(63) D TAB(77) "DB"
5390    LPRINT " RISE TIME" TAB(63) T2 TAB(77) "NS"
5400    LPRINT "OPTICAL FIBER"
5410    LPRINT " ATTENUATION" TAB(63) A TAB(74) "DB/KM"
5420    LPRINT " MATERIAL DISPERSION COEFFICIENT" TAB(63) D1 TAB(71)
       "NS/NM-KM"
5430      IF F$ <> "SM" THEN LPRINT "  BANDWIDTH-DISTANCE FACTOR"
       TAB(63) B TAB(73) "MHZ-KM"
5440    LPRINT "CONNECTORS AND SPLICES"
5450    LPRINT " NUMBER OF CONNECTORS" TAB(63) N1
5460    LPRINT " LOSS PER CONNECTOR" TAB(63) L1 TAB(77) "DB"
5470    LPRINT " NUMBER OF SPLICES" TAB(63) N2
5480    LPRINT " LOSS PER SPLICE" TAB(63) L2 TAB(77) "DB"
5490    LPRINT
5500    LPRINT TAB(20) "RESULTS OF POWER BUDGET CALCULATION"
5510    LPRINT "MAXIMUM SPAN LENGTH" TAB(63) K1 TAB(77) "KM"
5520    LPRINT "MINIMUM SPAN LENGTH" TAB(63) K2 TAB(77) "KM"
5530      IF K > K1 THEN LPRINT "THIS LINK REQUIRES " N " SPANS"
5540    LPRINT
5550    LPRINT TAB(22) "RESULTS OF DISTORTION CALCULATIONS"
5560    LPRINT "RISE TIME DUE TO MATERIAL DISPERSION" TAB(63) T3
       TAB(77) "NS"
5570      IF F$ <> "SM" THEN LPRINT "RISE TIME DUE TO INTERMODAL
       DISTORTION" TAB(63) T4 TAB(77) "NS"
5580    LPRINT "SPAN RISE TIME" TAB(63) T5 TAB(77) "NS"
5590    LPRINT "SPAN JITTER" TAB(63) J1 TAB(77) "NS"
5600    LPRINT "MULTISPAN LINK JITTER" TAB(63) J2 TAB(77) "NS"
5610    LPRINT
5620      IF T5 > T THEN LPRINT "THIS LINK IS DISTORTION-LIMITED."
5630      IF J2 > J THEN LPRINT "THIS LINK DOES NOT MEET RECOMMENDED
       JITTER."
5640      GOTO 9999
6001  REM**   MIL-HDBK-415 FIRST ITERATION COMPONENT SELECTIONS
```

Downloaded from http://www.everyspec.com


```
6002  REM**   REF:  TABLE VI. MIL-HDBK-415
6003  REM
6004  REM**   IDENTIFIERS:
6005  REM**     B  = BANDWIDTH-DISTANCE FACTOR OF MULTIMODE FIBER,
       MHZ-KM
6006  REM**     F$ = TYPE OF FIBER (GI OR SM)
6007  REM**     K  = LINK OR SPAN LENGTH, KM
6008  REM**     R  = OPTICAL LINE RATE, MBITS/SEC
6009  REM**     R$ = TYPE OF OPTICAL DETECTOR (PIN OR APD)
6010  REM**     T$ = TYPE OF OPTICAL SOURCE (LED OR LD)
6011  REM**     W  = WAVELENGTH OF OPTICAL SIGNAL, NM
6012  REM
6020  REM**   FOR R <= 10 MBITS/SEC AND K <= 5 KM
6030    LET W = 850 : REM**   NM
6040    LET T$ = "LED"
6050    LET R$ = "PIN"
6060    LET F$ = "GI"
6070    LET B = 100 : REM**   MHZ-KM
6080      RETURN
6090  REM**   FOR R <= 10 MBITS/SEC AND 5 KM < K < 15 KM
6100    LET W = 1300 : REM**   NM
6110    LET T$ = "LED"
6120    LET R$ = "PIN"
6130    LET F$ = "GI"
6140    LET B = 400 : REM**   MHZ-KM
6150      RETURN
6160  REM**   FOR 10 MBITS/SEC < R < 100 MBITS/SEC AND K <= 15 KM
6170    LET W = 850 : REM**   NM
6180    LET T$ = "LD"
6190    LET R$ = "APD"
6200    LET F$ = "GI"
6210    LET B = 800 : REM**   MHZ-KM
6220      RETURN
6230  REM**   FOR 10 MBITS/SEC < R < 100 MBITS/SEC AND 15 KM < K <
       25 KM
6240    LET W = 1300 : REM**   NM
6250    LET T$ = "LD"
6260    LET R$ = "PIN"
6270    LET F$ = "GI"
6280    LET B = 1200 : REM**   MHZ-KM
6290      RETURN
6300  REM**   FOR 10 MBITS/SEC < R < 100 MBITS/SEC AND 25 KM < K <
       100 KM
6310    LET W = 1300 : REM**   NM
6320    LET T$ = "LD"
6430    LET R$ = "PIN"
6440    LET F$ = "SM"
6450      RETURN
```

Downloaded from http://www.everyspec.com


```
6460  REM**   FOR R >  100 MBITS/SEC
6470    LET W = 1550 : REM**   NM
6480    LET T$ = "LD"
6490    LET R$ = "PIN"
6500    LET F$ = "SM"
6510      RETURN
6600  REM**   TABULATED EQUIPMENT PARAMETERS
6601  REM**   REF:  SECTIONS 5.2.8 AND 5.2.9, MIL-HDBK-415
6602  REM
6603  REM** IDENTIFIERS:
6604  REM**   A  = ATTENUATION OF FIBER, DB/KM
6605  REM**   D1 = MATERIAL DISPERSION COEFFICIENT OF FIBER, NS/NM-KM
6606  REM**   F  = RECEIVER NOISE FACTOR (RATIO)
6607  REM**   G  = RECEIVER GAIN (RATIO)
6608  REM**   P  = OPTICAL SOURCE POWER OUTPUT COUPLED TO FIBER, DBM
6609  REM**   T1 = TRANSMITTER RISE TIME, NS
6610  REM**   T2 = RECEIVER RISE TIME, NS
6611  REM**   W1 = OPTICAL SOURCE OUTPUT LINEWIDTH, NM
6612  REM
6620  REM**   OPTICAL SOURCE OUTPUT LINEWIDTH
6630  REM**   FOR 850-NM LED
6640    LET W1 = 30 : REM**   NM
6650      RETURN
6660      REM**    FOR 1300-NM LED
6670    LET W1 = 50 : REM**   NM
6680      RETURN
6690  REM**    FOR 850-NM LD
6700    LET W1 = .5 : REM**    NM
6710      RETURN
6720  REM**    FOR 1300-NM LD
6730    LET W1 = 1 : REM**    NM
6740      RETURN
6750  REM**    FOR 1550-NM LD
6760    LET W1 = 1 : REM**    NM
6770      RETURN
6780  REM**   OUTPUT POWER COUPLED TO FIBER
6790  REM**    FOR LED
6800    LET P = -10 : REM**   DBM
6810      RETURN
6820  REM**    FOR LD
6830    LET P = 0 : REM**     DBM
6840      RETURN
6850  REM**   TRANSMITTER RISETIME
6860  REM**    FOR LED
6870    LET T1 = 8 : REM**    NS
6880      RETURN
6890  REM**    FOR LD
6900    LET T1 = .8 : REM**   NS
```

Downloaded from http://www.everyspec.com


```
6910      RETURN
6920  REM**   OPTICAL DETECTOR GAIN
6930  REM**    FOR PIN
6940    LET G = 1
6950      RETURN
6960  REM**    FOR APD
6970    LET G = 100
6980      RETURN
6990  REM**   RECEIVER NOISE FACTOR
7000  REM**    FOR PIN
7010    LET F = 1
7020      RETURN
7030  REM**    FOR APD
7040    LET F = 7
7050      RETURN
7060  REM**   RECEIVER FIGURE OF MERIT
7070    LET Z = 3000
7080      RETURN
7090  REM**   RECEIVER RISE TIME
7100  REM**    FOR PIN
7110    LET T2 = 2 : REM**   NS
7120      RETURN
7130  REM**    FOR APD
7140    LET T2 = .5 : REM**  NS
7150      RETURN
7160  REM**   OPTICAL FIBER ATTENUATION
7170  REM**    FOR 850-NM GI
7180    LET A = 4 : REM**   DB/KM
7190      RETURN
7200  REM**    FOR 1300-NM GI
7210    LET A = 2 : REM**   DB/KM
7220      RETURN
7230  REM**    FOR 1300-NM SM
7240    LET A = 1 : REM**   DB/KM
7250      RETURN
7260  REM**    FOR 1550-NM SM
7270    LET A = .8
7280      RETURN
7290  REM**   OPTICAL FIBER MATERIAL DISPERSION COEFFICIENT
7300  REM**    FOR 850 NM
7310    LET D1 = .08 : REM**   NS/NM-KM
7320      RETURN
7330  REM**    FOR 1300 NM
7340    LET D1 = .01 : REM**   NS/NM-KM
7350      RETURN
7360  REM**    FOR 1550 NM
7370    LET D1 = 0 : REM**     NS/NM-KM
7380      RETURN
```

Downloaded from http://www.everyspec.com


```
7390  REM**   NUMBER OF CONNECTORS
7395    LET N1 = 2
7400      RETURN
7405  REM**   NUMBER OF SPLICES FOR GI (REEL LENGTH = 1 KM)
7410    LET N2 = K - 1
7415      RETURN
7420  REM**   NUMBER OF SPLICES FOR SM (REEL LENGTH = 2 KM)
7425    LET N2 = K/2 -1
7430      RETURN
7500  REM**   MIL-STD-188-111 AND MIL-HDBK-415 PARAMETERS
7501  REM**   REF. PARAGRAPH 5.2, MIL-HDBK-415
7502  REM
7503  REM** IDENTIFIERS:
7504  REM**   D  = DYNAMIC RANGE OF RECEIVER, DB
7505  REM**   E  = BIT ERROR RATE
7506  REM**   J  = JITTER, NS
7507  REM**   K  = LINK LENGTH, KM
7508  REM**   M  = POWER MARGIN, DB
7509  REM**   R  = OPTICAL LINE RATE, MBITS/SEC
7510  REM**   T  = RISE TIME, NS
7520  REM
7530  REM**   BER FOR TACTICAL LINK
7540   LET E = 1E-08
7550      RETURN
7560  REM**   DESIGN OBJECTIVE BER FOR TACTICAL LINK
7570    LET E = 1E-09
7580      RETURN
7590  REM**   BER FOR NONTACTICAL LINK AS A FUNCTION OF LENGTH
7600    LET E = 1.75E-10*K
7610      RETURN
7620  REM**   POWER MARGIN
7630    LET M = 6
7640      RETURN
7650  REM**   DESIGN OBJECTIVE POWER MARGIN
7660    LET M = 10
7670      RETURN
7680  REM**   DYNAMIC RANGE
7690    LET D = 20
7700      RETURN
7710  REM**   RISE TIME
7720    LET T = 1000!*.7*(1/R)
7730      RETURN
7740  REM**   JITTER
7750    LET J = 1000!*.035*(1/R)
7760      RETURN
7770  REM**   CONNECTOR ATTENUATION
7780    LET L1 = 1
7790      RETURN
```

Downloaded from http://www.everyspec.com


```
7800  REM**   TACTICAL CONNECTOR ATTENUATION
7810    LET L1 = 2
7820      RETURN
7830  REM**   SPLICE ATTENUATION
7840    LET L2 = .25
7850      RETURN
8000  REM**   CALCULATED EQUIPMENT PARAMETERS SUBROUTINE
8001  REM**   REF:  APPENDIX A, MIL-HDBK-415
8002  REM
8003  REM** IDENTIFIERS:
8004  REM**   E  = BER
8005  REM**   E1 = ENERGY PER PULSE FOR BER AND R, WATTS/PULSE
8006  REM**   F  = RECEIVER NOISE FACTOR (RATIO)
8007  REM**   G  = RECEIVER GAIN (RATIO)
8008  REM**   I  = APD IONIZATION RATIO
8009  REM**   N  = NUMBER OF PHOTONS PER PULSE FOR BER AND R
8010  REM**   P1 = REQUIRED DETECTOR INPUT POWER, DBM
8011  REM**   R  = OPTICAL LINE RATE, MBITS/SEC
8012  REM**   R1 = RECEIVER AMPLIFIER EQUIVALENT LOAD RESISTANCE, OHMS
8013  REM**   W  = WAVELENGTH OF OPTICAL SIGNAL, NM
8014  REM**   X  = NUMBER OF STANDARD DEVIATIONS FOR BER (SIGMA'S)
8015  REM**   Z  = RECEIVER FIGURE OF MERIT (RATIO)
8020  REM
8030  REM**   RECEIVER FIGURE OF MERIT, Z
8040    LET Z = SQR(4*1.38E-23*290*(R*1E+06/2)/R1)/(1.6E-19*R*1E+06/2)
8050      RETURN
8060  REM**   RECEIVER NOISE FACTOR, F
8070    LET F = I*G + (2 - 1/G)*(1 - I)
8080      RETURN
8090  REM**   DETECTOR INPUT POWER REQUIRED, P1
8100      GOSUB 8130 : REM**   GET ENERGY PER PULSE, E1
8110    LET P1 = 10*LOG(E1*(R*1E+06/2))/LOG(10) + 30
8120      RETURN
8130  REM**   ENERGY PER PULSE, E1
8140      GOSUB 8170 : REM**   GET NUMBER OF PHOTONS PER PULSE, N
8150    LET E1 = 6.62601E-34*(3E+08/(W*1E-09))*N
8160      RETURN
8170  REM**   NUMBER OF PHOTONS PER PULSE REQUIRED FOR BER AND R, N
8180      GOSUB 8210 : REM**   GET NUMBER OF SIGMA'S FOR BER, X
8190    LET N = X^2*F + 2*X*(Z/G)
8200      RETURN
8210  REM**     NUMBER OF SIGMA'S FOR BER, X
8220    LET X = SQR(-2*LOG(SQR(2*3.1416)*E))
8230      RETURN
9999    END
```

Downloaded from http://www.everyspec.com

THIS PAGE INTENTIONALLY LEFT BLANK.

Downloaded from http://www.everyspec.com

APPENDIX D

FIBER OPTIC LINK DESIGN WORKSHEET (Sheet 1 of 3)

Link or Span Identification Example 1. Long Haul Digital Link
East Terminal _____ West Terminal _____
Analyst _____ Date _____

LINK REQUIREMENTS

Link or span length, K	20	km
Power margin, M (6 dB min., 10 dB DO)	10	dB
Receiver dynamic range, D (20 dB min.)	20	dB
DIGITAL LINKS		
Data rate at electrical interface, R_e	45	Mb/s
Type of coding (RZ, NRZ, AMI, Biphase, Diphase)	Diphase	
Optical line rate, R_o	90	Mb/s
$R_o = R_e$ for NRZ		
$R_o = 2R_e$ for biphase and diphase		
$R_o = 4R_e$ for RZ and AMI		
BER for long haul links: $\leq 1.75K \times 10^{-10}$;	5.25×10^{-9}	
for tactical links: $\leq 10^{-8}$; DO = 10^{-9}		
Allowable rise time, $t = 0.7/R_o$	7.8	ns
Allowable jitter, $J = 0.035/R_o$	0.4	ns
ANALOG LINKS		
Bandwidth, B (depends on application)		MHz
SNR (depends on application)		dB

COMPONENT SELECTION

Operating wavelength, λ_1 (Table VI)	1300	nm
OPTICAL TRANSMITTER		
Source (LED, LD) (Table VI)	LD	
Linewidth, λ_1 (Mfrs data or Table VII)	1	nm
Power coupled into fiber, P_t (Mfrs data)	0	dBm
Rated rise time, t_t (Mfrs data or para. 5.2.8)	0.8	ns

Downloaded from http://www.everyspec.com

FIBER OPTIC LINK DESIGN WORKSHEET (Sheet 2 of 3)

Link or Span Identification Example 1, continued

COMPONENT SELECTION (Continued)

OPTICAL RECEIVER

Detector type (PIN, APD) (Table VI)	PIN
Input power required for BER or SNR, P_d (Mfrs data or calculate below)	-36.0 dBm
Rated rise time, t_r (Mfrs data or para. 5.2.8)	2 ns

OPTICAL FIBER

Type (SI, GI, SM) (Table VI)	SM
Attenuation, α, (Mfrs data)	1 dB/km
Material dispersion coefficient, d_{ma}	.01 ns/nm-km
Bandwidth-distance factor, B_d	MHz-km

CONNECTORS AND SPLICES

L_c = attenuation per connector x No. of connectors (1dB) (2)	2 dB
L_{sp} = attenuation per splice x No. of splices (0.25dB) (9)	2.25 dB

DETECTOR INPUT POWER, P_d, FOR BER

Number, x, of standard deviations for BER (Table A-II)	
Detector gain, G (Mfrs data for APD; 1 for PIN)	
Receiver Noise Factor, F (Mfrs data or calculate below for APD; 1 for PIN)	
Ionization ratio, i (Mfrs data or 0.1)	
$F = iG + (2-1/G)(1-i)$ (Or Fig. A-2)	
Receiver figure or merit, Z (Mfrs data or calculate below)	
Equivalent load resistance, R_l (Mfrs data or 10,000 ohms)	ohms
$Z = \sqrt{4kTB/R_l}/eB$	
Photons per pulse (Fig. A-3)	
Detector input power required (Fig. A-1)	dBm

Downloaded from http://www.everyspec.com

FIBER OPTIC LINK DESIGN WORKSHEET (Sheet 3 of 3)

Link or Span Identification Example 1, continued

POWER BUDGET CALCULATION

Power budget available for fiber loss, L_f

$L_f = P_t - P_d - M - L_c - L_{sp}$

$L_f = 0 - -36 - 10 - 2 - 2.25 =$ 21.75 dB

Maximum span length, $K_{max} = L_f/\alpha$ 21.75 km

Minimum span length, $K_{min} = (L_f + M \cdot D)/\alpha$ 11.75 km

DIGITAL RISE TIME AND JITTER CALCULATIONS

Rise time due to fiber material dispersion, t_{ms}

$t_{ms} = d_{ms} \times \lambda_1 \times K$ (K = span length used) 0.205 ns

Rise time due to fiber multimode distortion, t_{md}

$t_{md} = 350K/B_d$ NA ns

Span rise time, t

$t = 1.1\sqrt{t_t^2 + t_r^2 + t_{ms}^2 + t_{md}^2}$ 2.38 ns

Jitter, J (paragraph 5.2.11)

SNR as a voltage ratio (known SNR or 12) 12

$J = t/SNR$ 0.2 ns

Multispan jitter, J_m

No. of spans, N see note 2, below

$J_m = J\sqrt{N}$ ns

ANALOG BANDWIDTH CALCULATION

Bandwidth, $B = B_d/K$ (K = span length used) MHz

NOTES 1. The components selected will allow the desired span of 20 Km.

2. If this span is only one of several in a communications circuit, it will be necessary to calculate multispan jitter. This must fall within the allowable limit of 0.4 ns (from worksheet 1 of this example).

Downloaded from http://www.everyspec.com

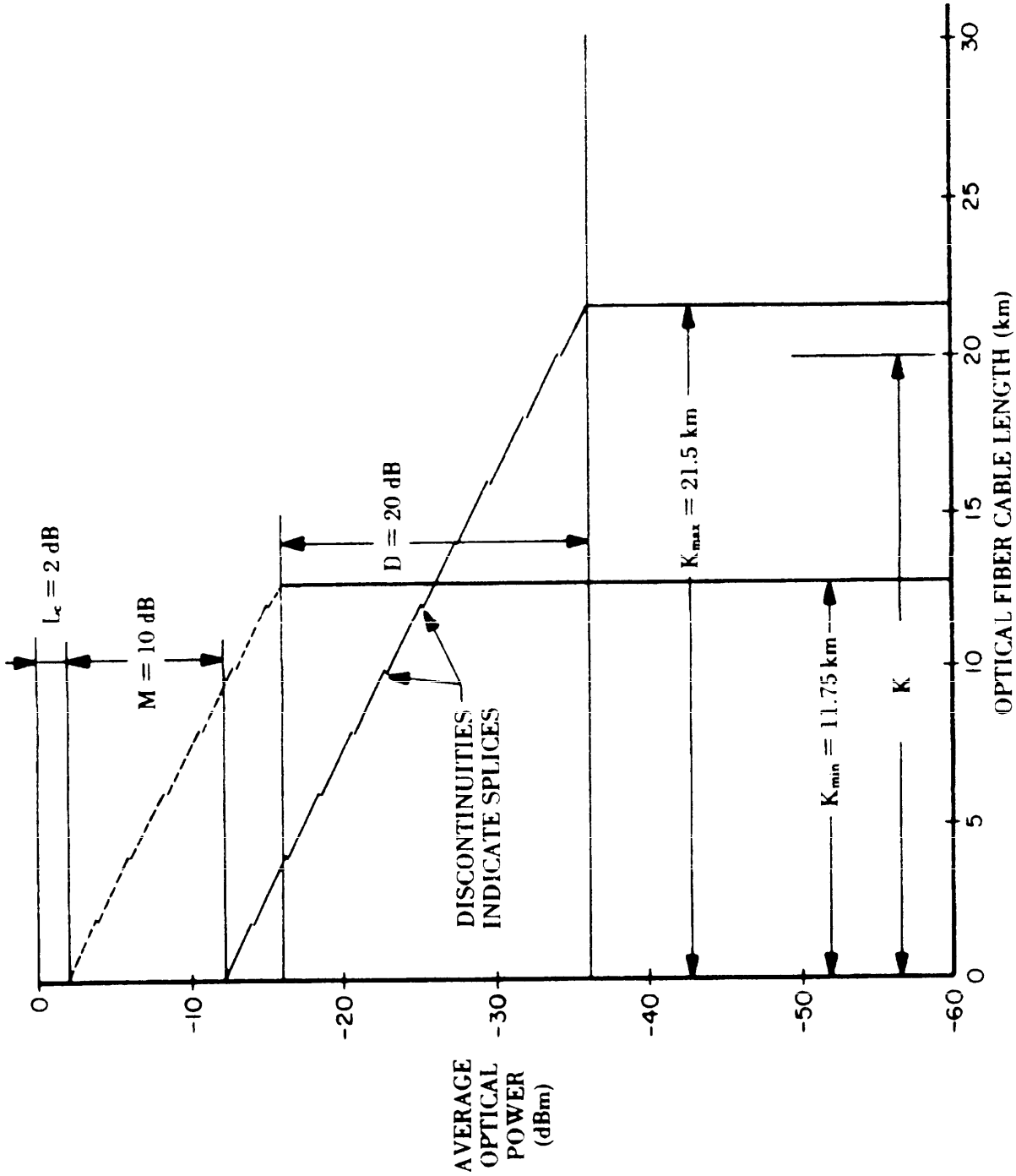

EXAMPLE 1. Long-haul digital link power budget.

Downloaded from http://www.everyspec.com

FIBER OPTIC LINK DESIGN WORKSHEET (Sheet 1 of 3)

Link or Span Identification Example 2. Tactical Link
East Terminal _____ West Terminal _____
Analyst _____ Date _____

LINK REQUIREMENTS

Link or span length, K	find Kmax	km
Power margin, M (6 dB min., 10 dB DO)	6	dB
Receiver dynamic range, D (20 dB min.)	25	dB
DIGITAL LINKS		
Data rate at electrical interface, R_e	10	Mb/s
Type of coding (RZ, NRZ, AMI, Biphase, Diphase)	NRZ	
Optical line rate, R_o		Mb/s
$R_o = R_e$ for NRZ		
$R_o = 2R_e$ for biphase and diphase		
$R_o = 4R_e$ for RZ and AMI		
BER for long haul links: $\leq 1.75K \times 10^{-10}$;		
for tactical links: $\leq 10^{-8}$; DO = 10^{-9}	10^{-8}	
Allowable rise time, $t = 0.7/R_o$	70	ns
Allowable jitter, $J = 0.035/R_o$	3.5	ns
ANALOG LINKS		
Bandwidth, B (depends on application)		MHz
SNR (depends on application)		dB

COMPONENT SELECTION

Operating wavelength, λ_1 (Table VI)	850	nm
OPTICAL TRANSMITTER		
Source (LED, LD) (Table VI)	LED	
Linewidth, λ_1 (Mfrs data or Table VII)	40	nm
Power coupled into fiber, P_s (Mfrs data)	-10	dBm
Rated rise time, t_t (Mfrs data or para. 5.2.8)	8	ns

Downloaded from http://www.everyspec.com

FIBER OPTIC LINK DESIGN WORKSHEET (Sheet 2 of 3)

Link or Span Identification Example 2, continued

COMPONENT SELECTION (Continued)

OPTICAL RECEIVER

Detector type (PIN, APD) (Table VI)	PIN	
Input power required for BER or SNR, P_d (Mfrs data or calculate below)	-40	dBm
Rated rise time, t_r (Mfrs data or para. 5.2.8)	12	ns

OPTICAL FIBER

Type (SI, GI, SM) (Table VI)	SI	
Attenuation, α, (Mfrs data)	10	dB/km
Material dispersion coefficient, d_{ms}	0.1	ns/nm-km
Bandwidth-distance factor, B_d	35	MHz-km

CONNECTORS AND SPLICES

L_c = attenuation (1.5 dB) per connector x No. of connectors (2)	3	dB
L_{sp} = attenuation per splice x No. of splices	0	dB

DETECTOR INPUT POWER, P_d, FOR BER

Number, x, of standard deviations for BER (Table A-II)		
Detector gain, G (Mfrs data for APD; 1 for PIN)		
Receiver Noise Factor, F (Mfrs data or calculate below for APD; 1 for PIN)		
Ionization ratio, i (Mfrs data or 0.1)		
$F = iG + (2-1/G)(1-i)$ (Or Fig. A-2)		
Receiver figure or merit, Z (Mfrs data or calculate below)		
Equivalent load resistance, R_l (Mfrs data or 10,000 ohms)		ohms
$Z = \sqrt{4kTB/R_l}/eB$		
Photons per pulse (Fig. A-3)		
Detector input power required (Fig. A-1)		dBm

Downloaded from http://www.everyspec.com

FIBER OPTIC LINK DESIGN WORKSHEET (Sheet 3 of 3)

Link or Span Identification: Example 2, continued

POWER BUDGET CALCULATION

Power budget available for fiber loss, L_f

$L_f = P_s - P_d - M - L_c - L_{sp}$

$L_f = -10 - -40 - 6 - 3 - 0 =$ 21 dB

Maximum span length, $K_{max} = L_f/\alpha$ 2.1 km

Minimum span length, $K_{min} = (L_f + M \cdot D)/\alpha$ 0.2 km

DIGITAL RISE TIME AND JITTER CALCULATIONS

Rise time due to fiber material dispersion, t_{ms}

$t_{ms} = d_{ms} \times \lambda_l \times K$ (K = span length used) 8.4 ns

Rise time due to fiber multimode distortion, t_{md}

$t_{md} = 350K/B_d$ 21 ns

Span rise time, t

$t = 1.1\sqrt{t_t^2 + t_r^2 + t_{ms}^2 + t_{md}^2}$ 29.5 ns

Jitter, J (paragraph 5.2.11)

SNR as a voltage ratio (known SNR or 12) 12

$J = t/SNR$ 2.46 ns

Multispan jitter, J_m

No. of spans, N

$J_m = J\sqrt{N}$ ns

ANALOG BANDWIDTH CALCULATION

Bandwidth, $B = B_d/K$ (K = span length used) MHz

NOTES: The maximum span length is power-limited to 2.1 km.

Downloaded from http://www.everyspec.com

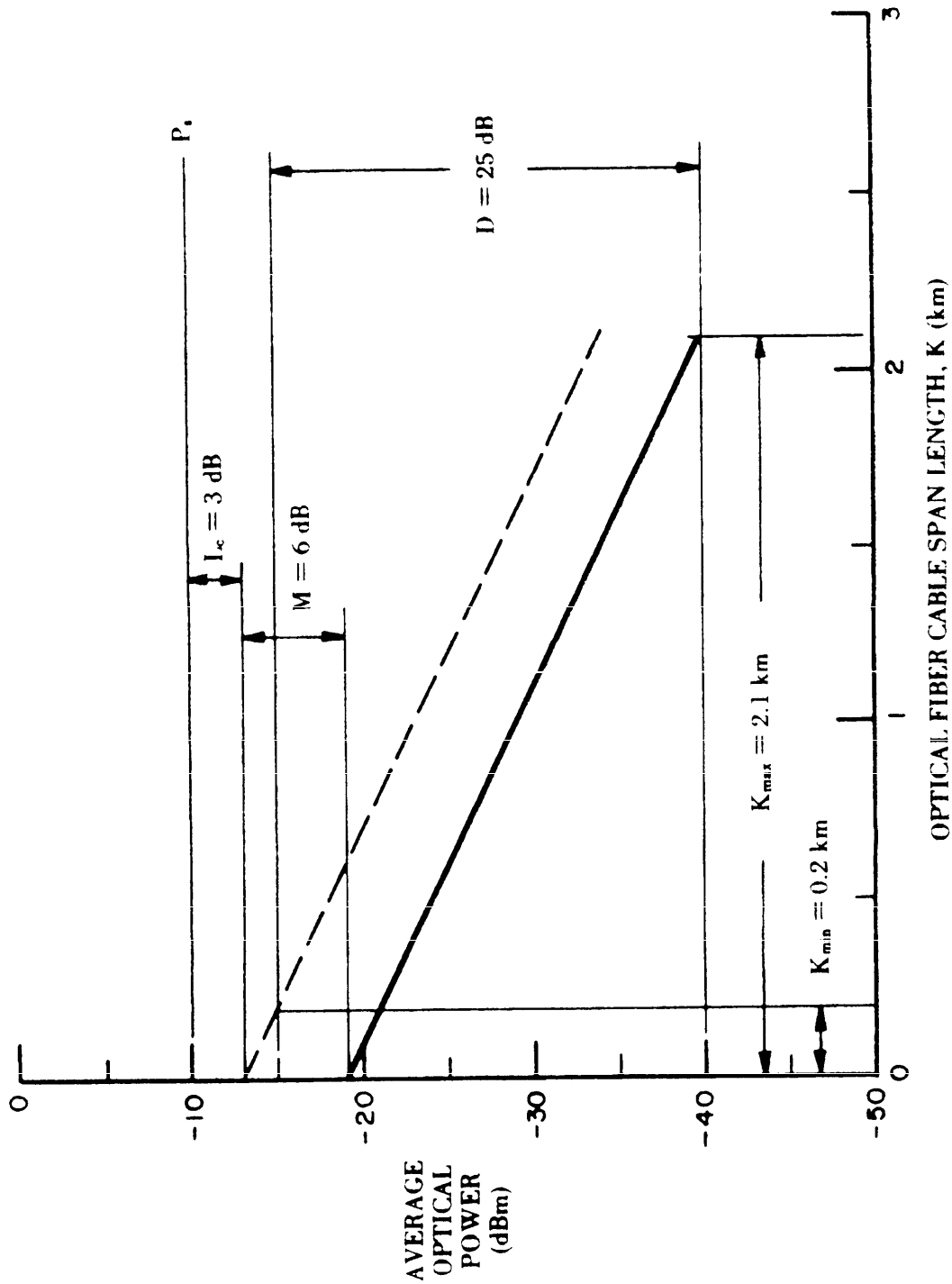

EXAMPLE 2. Tactical digital link power budget.

Downloaded from http://www.everyspec.com

FIBER OPTIC LINK DESIGN WORKSHEET (Sheet 1 of 3)

Link or Span Identification Example 3. Analog Video Link
East Terminal _____ West Terminal _____
Analyst _____ Date _____

LINK REQUIREMENTS

Link or span length, K	find K_{max}	km
Power margin, M (6 dB min., 10 dB DO)	6	dB
Receiver dynamic range, D (20 dB min.)	20	dB

DIGITAL LINKS

Data rate at electrical interface, R_e		Mb/s
Type of coding (RZ, NRZ, AMI, Biphase, Diphase)		
Optical line rate, R_o		Mb/s
$R_o = R_e$ for NRZ		
$R_o = 2R_e$ for biphase and diphase		
$R_o = 4R_e$ for RZ and AMI		
BER for long haul links: $\leq 1.75K \times 10^{-10}$;		
for tactical links: $\leq 10^{-8}$; DO = 10^{-9}		
Allowable rise time, $t = 0.7/R_o$		ns
Allowable jitter, $J = 0.035/R_o$		ns

ANALOG LINKS

Bandwidth, B (depends on application)	60	MHz
SNR (depends on application)	53	dB

COMPONENT SELECTION

Operating wavelength, λ_1 (Table VI)	820	nm
OPTICAL TRANSMITTER		
Source (LED, LD) (Table VI)	LED	
Linewidth, λ_1 (Mfrs data or Table VII)	40	nm
Power coupled into fiber, P_s (Mfrs data)	-10	dBm
Rated rise time, t_t (Mfrs data or para. 5.2.8)	8	ns

Downloaded from http://www.everyspec.com

FIBER OPTIC LINK DESIGN WORKSHEET (Sheet 2 of 3)

Link or Span Identification Example 3, continued

COMPONENT SELECTION (Continued)

OPTICAL RECEIVER

Detector type (PIN, APD) (Table VI)	PIN
Input power required for BER or SNR, P_d (Mfrs data or calculate below)	-25 dBm
Rated rise time, t_r (Mfrs data or para. 5.2.8)	12 ns

OPTICAL FIBER

Type (SI, GI, SM) (Table VI)	GI
Attenuation, α, (Mfrs data)	6 dB/km
Material dispersion coefficient, d_{ma}	ns/nm-km
Bandwidth-distance factor, B_d	100 MHz-km

CONNECTORS AND SPLICES

L_c = attenuation (1.5 dB) per connector x No. of connectors (2)	3 dB
L_{sp} = attenuation per splice x No. of splices	dB

DETECTOR INPUT POWER, P_d, FOR BER

Number, x, of standard deviations for BER (Table A-II)	
Detector gain, G (Mfrs data for APD; 1 for PIN)	
Receiver Noise Factor, F (Mfrs data or calculate below for APD; 1 for PIN)	
Ionization ratio, i (Mfrs data or 0.1)	
$F = iG + (2-1/G)(1-i)$ (Or Fig. A-2)	
Receiver figure or merit, Z (Mfrs data or calculate below)	
Equivalent load resistance, R_l (Mfrs data or 10,000 ohms)	ohms
$Z = \sqrt{4kTB/R_l}/eB$	
Photons per pulse (Fig. A-3)	
Detector input power required (Fig. A-1)	dBm

Downloaded from http://www.everyspec.com

FIBER OPTIC LINK DESIGN WORKSHEET (Sheet 3 of 3)

Link or Span Identification Example 3, continued

POWER BUDGET CALCULATION

Power budget available for fiber loss, L_f

$L_f = P_s - P_d - M - L_c - L_{sp}$

$L_f = -10 - -25 - 6 - 3 - 0 =$ 6 dB

Maximum span length, $K_{max} = L_f/\alpha$ 1 km

Minimum span length, $K_{min} = (L_f + M - D)/\alpha$ 0 km

DIGITAL RISE TIME AND JITTER CALCULATIONS

Rise time due to fiber material dispersion, t_{ms}

$t_{ms} = d_{ms} \times \lambda_l \times K$ (K = span length used) ns

Rise time due to fiber multimode distortion, t_{md}

$t_{md} = 350K/B_d$ ns

Span rise time, t

$t = 1.1\sqrt{t_t^2 + t_r^2 + t_{ms}^2 + t_{md}^2}$ ns

Jitter, J (paragraph 5.2.11)

SNR as a voltage ratio (known SNR or 12)

$J = t/SNR$ ns

Multispan jitter, J_m

No. of spans, N

$J_m = J\sqrt{N}$ ns

ANALOG BANDWIDTH CALCULATION

Bandwidth, $B = B_d/K$ (K = span length used) 100 MHz

NOTES The maximum span length is power-limited to 1 Km.

Downloaded from http://www.everyspec.com

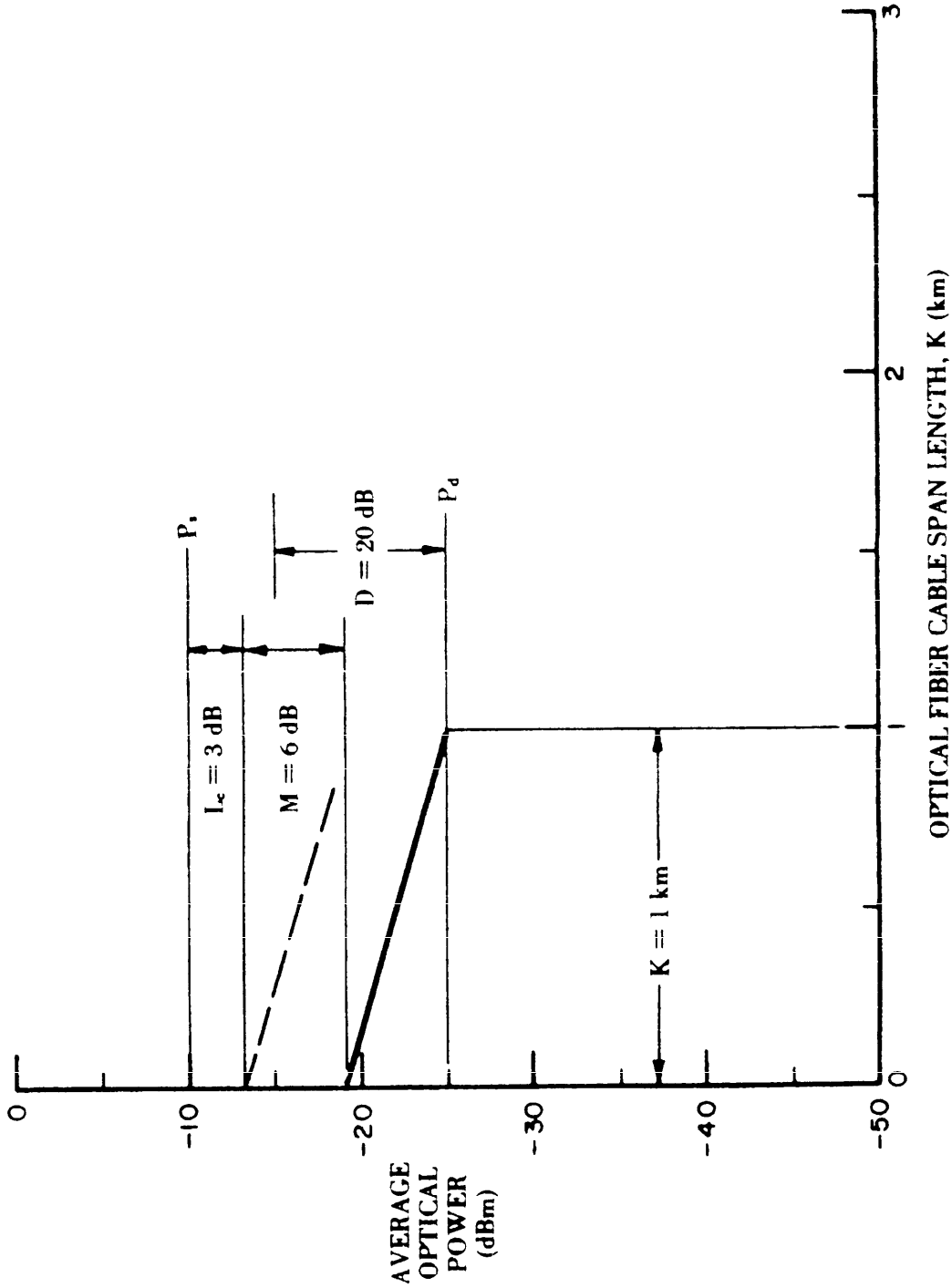

EXAMPLE 3. Analog video link power budget.

Downloaded from http://www.everyspec.com

FIBER OPTIC LINK DESIGN WORKSHEET (Sheet 1 of 3)

Link or Span Identification _____

East Terminal _____ West Terminal _____

Analyst _____ Date _____

LINK REQUIREMENTS

Link or span length, K	_____ km
Power margin, M (6 dB min., 10 dB DO)	_____ dB
Receiver dynamic range, D (20 dB min.)	_____ dB

DIGITAL LINKS

Data rate at electrical interface, R_e	_____ Mb/s
Type of coding (RZ, NRZ, AMI, Biphase, Diphase)	_____
Optical line rate, R_o	_____ Mb/s
$R_o = R_e$ for NRZ	
$R_o = 2R_e$ for biphase and diphase	
$R_o = 4R_e$ for RZ and AMI	
BER for long haul links: $\leq 1.75K \times 10^{-10}$;	_____
for tactical links: $\leq 10^{-8}$; DO = 10^{-9}	_____
Allowable rise time, $t = 0.7/R_o$	_____ ns
Allowable jitter, $J = 0.035/R_o$	_____ ns

ANALOG LINKS

Bandwidth, B (depends on application)	_____ MHz
SNR (depends on application)	_____ dB

COMPONENT SELECTION

Operating wavelength, λ_1 (Table VI)	_____ nm
OPTICAL TRANSMITTER	
Source (LED, LD) (Table VI)	_____
Linewidth, λ_1 (Mfrs data or Table VII)	_____ nm
Power coupled into fiber, P_s (Mfrs data)	_____ dBm
Rated rise time, t_r (Mfrs data or para. 5.2.8)	_____ ns

Downloaded from http://www.everyspec.com

FIBER OPTIC LINK DESIGN WORKSHEET (Sheet 2 of 3)

Link or Span Identification _____

COMPONENT SELECTION (Continued)

OPTICAL RECEIVER

Detector type (PIN, APD) (Table VI) _____

Input power required for BER or SNR, P_d
(Mfrs data or calculate below) _____ dBm

Rated rise time, t_r (Mfrs data or para. 5.2.8) _____ ns

OPTICAL FIBER

Type (SI, GI, SM) (Table VI) _____

Attenuation, α, (Mfrs data) _____ dB/km

Material dispersion coefficient, d_{ma} _____ ns/nm-km

Bandwidth-distance factor, B_d _____ MHz-km

CONNECTORS AND SPLICES

L_c = attenuation per connector x No. of connectors _____ dB

L_{sp} = attenuation per splice x No. of splices _____ dB

DETECTOR INPUT POWER, P_d, FOR BER

Number, x, of standard deviations for BER (Table A-II) _____

Detector gain, G (Mfrs data for APD; 1 for PIN) _____

Receiver Noise Factor, F (Mfrs data or calculate below for APD; 1 for PIN)

Ionization ratio, i (Mfrs data or 0.1) _____

$F = iG + (2-1/G)(1-i)$ (Or Fig. A-2) _____

Receiver figure or merit, Z (Mfrs data or calculate below)

Equivalent load resistance, R_l (Mfrs data or 10,000 ohms) _____ ohms

$Z = \sqrt{4kTB/R_l}/eB$ _____

Photons per pulse (Fig. A-3) _____

Detector input power required (Fig. A-1) _____ dBm

Downloaded from http://www.everyspec.com

FIBER OPTIC LINK DESIGN WORKSHEET (Sheet 3 of 3)

Link or Span Identification .....

POWER BUDGET CALCULATION

Power budget available for fiber loss, L_f

$L_f = P_s - P_d - M - L_c - L_{sp}$

$L_f =$ — — — — = ... dB

Maximum span length, $K_{max} = L_f/\alpha$ ..... km

Minimum span length, $K_{min} = (L_f + M - D)/\alpha$ ..... km

DIGITAL RISE TIME AND JITTER CALCULATIONS

Rise time due to fiber material dispersion, t_{ms}

$t_{ms} = d_{ms} \times \lambda_l \times K$ (K = span length used) ..... ns

Rise time due to fiber multimode distortion, t_{md}

$t_{md} = 350K/B_d$ ..... ns

Span rise time, t

$t = 1.1\sqrt{t_t^2 + t_r^2 + t_{ms}^2 + t_{md}^2}$ ..... ns

Jitter, J (paragraph 5.2.11)

SNR as a voltage ratio (known SNR or 12) .....

$J = t/SNR$ ..... ns

Multispan jitter, J_m

No. of spans, N .....

$J_m = J\sqrt{N}$ ..... ns

ANALOG BANDWIDTH CALCULATION

Bandwidth, $B = B_d/K$ (K = span length used) ..... MHz

NOTES .....

FIGURE 4[illegible]. Digital link analysis flow diagram.

Downloaded from http://www.everyspec.com

APPENDIX E

ACRONYMS, ABBREVIATIONS, AND SYMBOLS

A	ampere(s)
AGC	automatic gain control
AM	amplitude modulation
AMI	alternate-mark-inverted
APD	avalanche photodiode
B	3-dB bandwidth of an amplifier
B_d	bandwidth-distance factor
B_e	electrical bandwidth
B_o	optical bandwidth
BER	bit error rate
CATV	community antenna television
CCTV	closed-circuit television
cm	centimeter(s)
CPU	central processing unit
D	receiver dynamic range
d_{ma}	material dispersion coefficient
dB	decibel(s)
dBm	decibels referred to one miliwatt
DCE	data circuit-terminating equipment
DO	design objective
DRAMA	digital radio and multiplexer acquisition
DTE	data terminal equipment
e	charge on an electron (1.602×10^{-19} coulombs)
E_p	energy per pulse
EMI	electromagnetic interference
E/O, O/E	electro-optic, opto-electric
EMP	electromagnetic pulse
eqpt	equipment
F	noise factor
f	optical frequency (3×10^8/wavelength in meters)
FDM	frequency-division multiplexing
FET	field effect transistor
FM	frequency modulation
FWHM	full-width-half-maximum
G	gain
GHz	gigahertz
GI	graded index

Downloaded from http://www.everyspec.com

ACRONYMS, ABBREVIATIONS, AND SYMBOLS (Continued)

h	Planck's constant (6.626×10^{-34} joule-second)
Hz	hertz
i	ionization ratio
ILD	injection laser diode
IM	intensity modulation
J	jitter
J_m	multimode jitter
K	span length in kilometers; kelvin(s)
k	Boltzman's constant (1.38×10^{-23} joules/K)
k_m	modulation index
k_t	rise time factor
km	kilometers
L_c	power loss in a connector
L_f	power loss in an optical fiber
L_{sp}	power loss in a splice
LAN	local area network
LD	laser diode
LED	light-emitting diode
M	power margin
mA	miliamperes
Mb	megabytes
mfrs	manufacturers
MHz	megahertz
mux	multiplexer
mW	miliwatt(s)
N	number of spans in a link; transition uncertainty (jitter)
n	refractive index
NA	numerical aperture
nm	nanometers
NRZ	non-return-to-zero
ns	nanosecond(s)
o.d.	outside diameter
OTDR	optical time domain reflectometer
P	power
P_d	power required at the optical detector
P_s	optical source power output
PAM	pulse amplitude modulation
PCM	pulse-code modulation

Downloaded from http://www.everyspec.com

ACRONYMS, ABBREVIATIONS, AND SYMBOLS (Continued)

PDM	pulse-duration modulation
PIN	positive-intrinsic-negative
PM	phase modulation
PPM	pulse-position modulation
PRBS	pseudo-random bit sequence
ps	picosecond(s)
R	data rate in bits per second
R_e	data rate at electrical interface
R_l	equivalent load resistance
R_o	optical line rate
RAM	reliability, availablility, maintainability
RC	resistive-capacitive
RCVR	receiver
RFI	radio frequency interference
s	second(s)
SI	stepped index
SM	single mode
SNR	signal-to-noise ratio
sr	steradian(s)
T	temperature Kelvin
t	link or span rise time; allowable rise time; pulse width
t_{ma}	rise time due to material dispersion
t_{md}	rise time due to multimode distortion
t_r	receiver rise time
t_t	transmitter rise time
TDM	time-division multiplexing
T.O.	technical order
TTL	transistor-transistor logic
TYP	typical
UV	ultraviolet
W	watt(s)
WDM	wavelength-division multiplexing
x	number of standard deviations
XMTR	transmitter
Z	receiver figure of merit

Downloaded from http://www.everyspec.com

ACRONYMS, ABBREVIATIONS, AND SYMBOLS (Continued)

α (alpha)	attenuation
δ (delta)	offset
λ (lambda)	operating wavelength
λ_1 (lambda$_1$)	spectral linewidth
μm	micrometer(s); microns
μw	microwatt(s)

Downloaded from http://www.everyspec.com

Downloaded from http://www.everyspec.com

INSTRUCTIONS: In a continuing effort to make our standardization documents better, the DoD provides this form for use in submitting comments and suggestions for improvements. All users of military standardization documents are invited to provide suggestions. This form may be detached, folded along the lines indicated, taped along the loose edge *(DO NOT STAPLE)*, and mailed. In block 5, be as specific as possible about particular problem areas such as wording which required interpretation, was too rigid, restrictive, loose, ambiguous, or was incompatible, and give proposed wording changes which would alleviate the problems. Enter in block 6 any remarks not related to a specific paragraph of the document. If block 7 is filled out, an acknowledgement will be mailed to you within 30 days to let you know that your comments were received and are being considered.

NOTE This form may not be used to request copies of documents, nor to request waivers, deviations, or clarification of specification requirements on current contracts. Comments submitted on this form do not constitute or imply authorization to waive any portion of the referenced document(s) or to amend contractual requirements.

(Fold along this line)

(Fold along this line)

OFFICIAL BUSINESS
PENALTY FOR PRIVATE USE $300

NO POSTAGE NECESSARY IF MAILED IN THE UNITED STATES

BUSINESS REPLY MAIL

FIRST CLASS PERMIT NO. 12062 WASHINGTON, D.C.

POSTAGE WILL BE PAID BY DEPARTMENT OF THE ARMY

Commander
HQ, USAESEIA
ATTN: ASC-E-ES
Ft. Huachuca, Arizona 85613-5300

Downloaded from http://www.everyspec.com

STANDARDIZATION DOCUMENT IMPROVEMENT PROPOSAL

(See Instructions – Reverse Side)

1. DOCUMENT NUMBER	2. DOCUMENT TITLE
MIL-HDBK-415	Design Handbook for Fiber Optic Communications Systems

3a. NAME OF SUBMITTING ORGANIZATION	4. TYPE OF ORGANIZATION *(Mark one)*
	☐ VENDOR
	☐ USER
b. ADDRESS *(Street, City, State, ZIP Code)*	☐ MANUFACTURER
	☐ OTHER *(Specify)* _____

5. PROBLEM AREAS

a. Paragraph Number and Wording

b. Recommended Wording

c. Reason/Rationale for Recommendation

6. REMARKS

7a. NAME OF SUBMITTER *(Last, First, MI)* – Optional	b. WORK TELEPHONE NUMBER *(Include Area Code)* – Optional
c. MAILING ADDRESS *(Street, City, State, ZIP Code)* – Optional	8. DATE OF SUBMISSION *(YYMMDD)*

DD FORM 82 MAR 1426

PREVIOUS EDITION IS OBSOLETE