MIL-HDBK-410
15 OCTOBER 1973

MILITARY STANDARDIZATION HANDBOOK

CONTAMINATION CONTROL TECHNOLOGY

LOGISTIC PROTECTION OF PRECISION CLEANED MATERIEL

FSC-3694

MIL-HDBK-410
Contamination Control Technology
Logistic Protection of Precision Cleaned Matriel
15 October 1973

1. This standardization handbook was developed by the US Army Missile Command in accordance with established procedure.

2. This publication was approved on 15 October 1973 for printing and inclusion in the military standardization handbook series.

3. This document provides fundamental information on packaging methods and procedures for use in the protection of precision cleaned materiel. The handbook is not intended to be referenced in its entirety for mandatory use in procurement specifications except for informational purposes. Specific materials may be specified. No criteria herein is intended to supersede any specification requirements.

4. Every effort has been made to reflect the latest information available. It is the intent to review this handbook periodically to insure its completeness and currency. Users requests for changes and inclusions in this handbook should be sent to:

Commanding General
US Army Missile Command
Standardization Division
AMSMI-RCS
Redstone Arsenal, Alabama 35809

FOREWORD

The purpose of this document is the establishment of general data for operational and performance characteristics in handbook form in accordance with DOD documentation criteria for use in contamination control technology relative to the logistic protection for precision cleaned material.

The information in this handbook is an accumulation of existing documents, Governmental, Technical Society, and contractor data which, after evaluation, was considered pertinent to the state-of-the-art.

Materials and procedures included are those used by military services and industry in the packaging of precision cleaned products and logistics procedures for packaging precision cleaned materials and items. These materials and procedures were considered in conjunction with their effectiveness in maintaining the required cleanliness level of a product from a controlled environment to its final destination.

THIS PAGE LEFT INTENTIONALLY BLANK

CONTENTS

Section Page

Section Page

Section Page

Section Page

Section Page

ILLUSTRATIONS

TABLES

SECTION 1

INTRODUCTION

1.1 Objective.

1.1.1 Purpose. The purpose of this handbook is to present the criteria necessary to establish general data for operational and performance characteristics essential in developing suitable techniques for use in the area of contamination control technology. The principal use is intended for clean room personnel and other packaging and packing personnel involved in the packaging of precision cleaned item(s) and material(s) and during storage and distribution.

1.1.2 Clean packaging. Clean packaging is that intimate protection afforded directly and immediately to precision-cleaned items for the sole purpose of preserving them from contamination. It is outside the scope of the Methods of Preservation-Packaging specified in Specification MIL-P-116 and is considered a pre-MIL-P-116 preparation. It is neither a variation on MIL-P-116 methods nor a substitute for MIL-P-116 methods. In order to accomplish clean packaging the following conditions must exist (Ref 5):

(a) The packaging material must be cleanable and must not contribute contamination except within controlled and acceptable limits.

(b) The cleanliness level of the cleaned packaging material must be maintained at a maximum from the point of cleaning until a closure is effected.

(c) The packaging operation must be accomplished in a clean environment in compliance with accepted clean packaging techniques.

(d) The package must be constructed and sealed to prevent the entrance of contaminants.

1.1.3 Reason. The necessity for clean packaging materials and techniques have resulted from an increased use of precision, microminiature, and high reliability components by both the commercial and military organizations. Precision cleaning is generally not performed at the site of use, therefore creating the need for maintaining the required cleanliness of the item during handling, shipping, and storage. Unless the cleanliness level is maintained, the cleaning effort is nullified.

1.2 Scope. This handbook is a compilation of data on contamination control technology and covers the criteria necessary for establishing general data on operational and performance characteristics of precision packaging materials and procedures.

1.2.1 Packaging of precision cleaned products. In this document, clean packaging encompasses the planning, organization, and implementation of all activities required to determine, achieve, and maintain a required cleanliness level, in, on, or around an item that has been precision cleaned to a specified cleanliness level in a clean environment. Precision packaging including the methods of protective wrappings, cushioning, interior containers, and identification marking of the unit package will be covered. The type and physical attributes of packaging materials most commonly used and the most recent techniques for packaging of item(s) and material(s) and means of verifying the cleanliness levels achieved will be discussed.

1.2.2 Logistics procedures for packaging precision cleaned items or materials. Logistics procedures will be presented throughout the text with respect to transporting and storing the item in the clean room and to the ultimate destination. As a direct function of logistics, the packing of precision cleaned items will be discussed from the standpoint of exterior shipping container preparation, including the techniques for cushioning, blocking, bracing, weatherproofing, environmental protection (humidity, pressure and temperature control, shielding, etc.), container closure, strapping and marking.

1.3 Principal Considerations. Six major problem areas exist in the area of packaging precision cleaned item(s) and material(s). First, controlling contamination due to sloughing; second, formulating and obtaining wide acceptance of standards; third, attitudes of personnel; fourth, training of personnel; fifth, level of protection required; sixth, suitable materials for special packaging conditions.

1.3.1 Controlling contamination due to sloughing. Contamination due to sloughing is considered by some to be the foremost problem in clean packaging. Recleaning after removal from the package and just before placing in service is one solution; rigid packaging is an alternative that may apply in a few situations. (Ref 1).

1.3.2 Formulating and obtaining wide acceptance of standards. There are various procedures presently used in clean packaging regarding the selection of plastic films, sealing techniques, and methods of inspection. (Ref 1). Lack of definitive limits and specified testing methods for terms such as lint-free, non-sloughing, and non-shedding has also created some difficulties. A widely accepted standardization of procedures and terminology would enable personnel involved in precision packaging to communicate in a more effective manner.

1.3.3 Attitudes of personnel. Adherence to regulations in a clean room is a necessity. This requires constant alertness on the part of management and supervisor. Due to varying degrees of self-motivation among personnel, the clean room supervisor must spend a greater amount of time watching for inadvertent infractions than in other working conditions (Ref. 2). Conscientious attitudes among personnel are imperative for a successful packaging operation.

1.3.4 Training of personnel. Personnel must be aware of the importance and responsibilities of their work. The results of faulty or inadequate packaging and packing can be disastrous, both physically and financially (Ref. 3).

1.3.5 Type of protection required. To assure that a precision cleaned item will not be damaged or contaminated during storage and transportation, various levels of packaging and packing protection have been developed. Many times, however, the destination of an item is not known by the personnel involved so that maximum protective packing occurs to ensure adequate protection. If known, packing personnel should be informed of the transportation and storage conditions to which a package will be subjected.

1.3.6 Suitable materials for special packaging problems. Due to the recent advances in material technology, the availability of suitable materials for special packaging situations has often been a problem. Field force protection is one area where research and development in materials have not satisfactorily met most cleanli- requirements.

1.4 References.

1. Cleaning Conference Proceedings, MSFC-NASA, January 1966.

2. Contamination Control Principles, Sandia Corporation, NASA SP-5045, 1967.

3. Contamination Control Technology, MIL-HDBK-407, 31 January 1972.

THIS PAGE LEFT INTENTIONALLY BLANK

SECTION 2

GLOSSARY

2.1 Definitions.

A

Abrasion. The damage caused by the scuffing or friction of a part against its package, or of a package against an external object.

Abrasion-resistance. Ability to withstand the effects of repeated rubbing, scuffing and scratching.

Absorption. Penetration of a substance into the body of another; to take in and incorporate; assimilate.

Acceptable quality level. A nominal value expressed in terms of percent defective or defects per hundred units, whichever is applicable, specified for a given group of defects of a product.

Acceptable reliability level. A nominal value expressed in terms of percent failure per thousand operating hours specified for acceptance of parts or equipment. It is a measure of reliability which will be accepted, some preassigned percentage of the time, by a reliability sampling plan.

Acid. A substance whose molecules ionize in water solutions to give off hydrogen ions; a substance which registers less than 7 on the pH scale.

Adherence. The state of adhering, or sticking together. The strength of an adhesive assembly or test specimen measured in such a manner that a large part of the loading stress is concentrated at or near the bond to produce apparent fracture in the bond.

Adhesive. A material that initially is a fluid or is capable of being rendered fluid, to be spread on one or both surfaces to be bonded together for the purpose of forming a fluid or semi-fluid bridge or interface between them that later changes to a solid or semi-solid interface across which affinities are established that hold the nearly contiguous surfaces together with a strength adequate for the end use.

Adhesive, pressure sensitive. An adhesive which requires only briefly applied pressure at room temperature for adherence to a surface.

Adsorption. Adhesion of the molecules of a gas, liquid, or dissolved substance to a surface; the taking up of one substance at the surface of another.

Agglomeration. The combining, joining, clumping, or clustering of two or more particles or droplets by any means.

Air-cleanliness class. Each class of air cleanliness is determined by the particle count per unit volume, based on tabulation of particles 0.5 micron and larger or 5.0 microns and larger.

Airlock. A chamber with doors functioning to maintain pressure during entry to and exit from an enclosed area. It is designed to provide an air barrier for the controlled environment area by preventing the entry of contaminated air.

Air shower. A chamber with interlocked doors and equipped with an exhaust system, having numerous air nozzles arranged in a predetermined pattern, for the purpose of forcibly blowing loose particles, fibers, dust, and other particulate matter from the person and garments.

Alkali. Any base or hydroxide that is soluble in water and can neutralize acids; a substance that registers more than 7 on the pH scale.

Ambient condition. Environmental conditions such as pressure, temperature, humidity, etc., which are normal for one specific location.

B

Bag. A preformed container made of flexible material, generally enclosed on all sides except one which forms an opening that may be sealed after filling. May be made of any flexible material, or multiple plies of flexible materials, or a combination of two or more materials.

Barrier material. A material designed to withstand, to a specified degree, the penetration of water, oils, water vapor or certain gases, as desired. May serve to exclude or retain such elements without or within a package.

Blanket. Low pressure gas introduced into a container (or system) to provide an inert atmosphere.

Breaking strength. The ability of a material to resist rupture by tension. A measure of the strength of paper, fabrics, films and other materials.

C

Carton. A form of package used in interior packaging made from bending grade of paperboard.

Case. A non-specific term for a container.

Case mark. Identification and shipping information on a shipping container.

Cavitation. The formation of cavities, such as the microscopic vacuum pockets created in a solution by ultrasonic energy (or any mechanical energy).

Certificate. A statement or certification, either affixed to or marked on a container, showing information concerning the container and its contents, usually in accordance with, and to show compliance with, the specification, rules and regulations of a shipping or regulatory agency.

Chemical cleaning. The term shall indicate pickling, passivating, descaling, deoxidizing and other cleaning processes where surface conversion or preparation is the prime objective.

Clean. The contaminant level just below that which adversely affects the operation or reliability of the part, component, system, or environment.

Cleanable. Capable of being cleaned to specified levels without detrimental effect.

Clean item. A part, component, or system which is wholly cleaned or has significant surfaces which have been cleaned and verified to a specified level of cleanliness.

Cleanliness level. An established maximum allowable distribution of contamination of a given size and quantity in a stipulated area or volume.

Clean packaging. The application of packaging measures and material to maintain the cleanliness of a clean item during handling, storage, or shipment. Clean packaging activities are performed in the clean room.

Clean room. A clean room is an enclosed area employing control as required. To meet the requirements of a "clean room", the area must meet the particulate count as specified in FED. STD. 209a, Paragraph 5.1.3.

Clean work station. A work bench or similar working enclosure characterized by having its own filtered air supply. The filters must be capable of providing the required air-cleanliness level.

Closure. A sealing or covering device affixed to or on a container for the purpose of retaining the contents and preventing contamination thereof.

Cohesion. The tendency of a mass to hold together.

Combustible contaminants. Flammable solvents, cleaning solutions, oils, paints, preservatives, wood, or other materials that are present in a component or system.

Complete blocking. Blocking or plugging which occurs when individual contamination particles are large enough to plug a clearance or orifice.

Component. A series of two or more parts, sub-assemblies, assemblies, or any combination thereof, which in turn becomes a piece of functional equipment or assembly.

Contaminant. Any material or substance which is unwanted or adversely effects the contaminee.

Contaminant level. A quantitative expression for the size, distribution, shape, quantity and physical properties of one type of particulate matter in a fluid.

Contaminant-sensitive part. A part whose function may deteriorate with the presence of materials other than those for which it was designed. The foreign material may be liquid, gaseous, or solid in nature, with size, number, or character harmful to the operation of the device.

Contaminate. The act of introducing any contaminant; to make impure or unclean; to pollute, defile, sully, taint, or soil.

Contamination. The presence of one or more contaminants in or on the article.

Contamination control. The planning, organization, and implementation of all activities needed to determine, achieve, and maintain a required cleanliness level in, on, or around the contaminee.

Contamination tolerance level. The contamination level which cannot be exceeded and still allow components to have a specified performance, reliability, and life expectancy. Contaminant tolerance level would refer only to the influence of one type of contaminant.

Contaminee. That which is or can be contaminated. Contaminees may be products, materials devices, people, gases, or surfaces.

Controlled area. Any enclosure which has a degree of control of contaminants in air, gases, and fluids (may include temperature, humidity, and pressure) and which will not qualify as a clean room.

Controlled environment facility. A specified working area that has the primary objective of controlling one or more physical chemical, or biological variables.

Controlled work area. An area where a high degree of cleanliness is maintained by the enforcement of strict controls on personnel access, operations, and facility maintenance as opposed to a clean room where the total environment is controlled by high efficiency air filters, humidity and temperature controls, and the enforcement of more strict personnel and clothing controls.

Critical moisture content. The moisture content of a substance at which physical or chemical deterioration occurs to a degree sufficient to render the substance unusable.

Cushioning. (1) The protection from physical damage afforded to an item by placing about its outer surfaces materials that have been designed to absorb the shock or reactions caused by external forces. (2) Resilient materials used for cushioning.

D

Decontamination. The process of removing unwanted matter; the reduction of contamination to an acceptable level.

Degreasing. Solvent cleaning, usually with hot vapor, for removal of grease.

Dehydrating agent. A material that has a high affinity for moisture and absorbs it from the surrounding air or fluid; a desiccant.

Desiccant. A dehydrating agent. A material which will absorb moisture by physical or chemical means.

Desiccant, activated. A desiccant which has been physically treated, by means such as heating, to produce the maximum capacity for absorption or adsorption of moisture.

Direct test. Any surface cleanliness test in which the parameter measured is the amount of soil remaining on a surface.

Dust preventive clothing. This clothing is specially designed for wear by all personnel who enter a clean room. Special particle/lint-free clothing such as overalls, caps, gloves, finger cots, boots and shoes are primarily manufactured from synthetic fabrics and materials. Their purpose is to minimize contamination of clean rooms by particulate matter from an individual's skin, hair, clothing, and shoes such as dust, lint, dandruff, skin flakes, etc.

E

Electronic sealing. Heat sealing of adjoining surfaces of thermoplastic films by high frequency electrical current.

Electrostatic. Pertaining to the phenomena due to attractions and repulsions of electrical charges.

Emmission factor. A statistical average of the rate at which contaminants are emitted from any given source.

Emulsion. A liquid in which other particles or liquids are suspended; a characteristic of some cleaning agents in holding and carrying away soils.

Entrapment. The act of securing and holding, as dirt is entrapped in a filter.

Environment. The total of all factors which might influence or cause contamination of a contaminee. The primary factors of environment are the forms air, gas, liquid, solid, or surfaces.

Environmental control. Environmental control is the positive control of atmospheric conditions within a specific area. It is a collective term to identify the control of all factors of the environment of the clean room or clean work area. These factors include air temperature, humidity, air-borne particle control, pressurization, illumination, and injurious vapor control.

Environmentally adjacent. A condition in which packaging materials are not in direct contact with clean or significant surfaces but are exposed to these surfaces.

Environmental package. A clean material closure, wrap or container over the intimate package that is sealed to provide an additional contamination barrier to protect the intimate package and its contents from environmental elements.

F

Filtration. The process of removing contaminants from a gas or liquid by passing them through a porous media.

First work location. The work location that is first in the path of the clean airstream.

Foil. Unsupported thin metal membrane less than 0.006 inch thick.

G

Gas transmission. The movement of gas through film materials. The gas transmission property (Permeability) of a film is measured in terms of: volume of gas (at standard temperature and pressure) transmitted through a given area of film of a given thickness within a given time at specified temperature and relative humidity.

Gassing. (1) Removing air from a filled package, usually a metal can, and replacing it with another gas, such as carbon dioxide or nitrogen. (2) The action of a packaged product when producing gas.

Generated contamination. That contamination which is generated within the system components as a result of such actions as wear, cavitation, and erosion.

H

Hermetic seal. A seal or closure that is airtight and impervious to external influences.

High efficiency particulate air filter (HEPA). MIL-T-51068A specified filters with minimum efficiency of 99.97 percent determined by the homogeneous DOP method at airflows of 20 and 100 percent of the rated flow capacity of the filter. It is referred to as the HEPA filter.

Horizontal laminar airflow clean room. A room equipped with one entire vertical wall of HEPA filters through which the air passes at a predetermined speed to an exhaust wall directly opposite the HEPA filter wall. The entire body of air moves horizontally across the room along essentially parallel flow lines at uniform velocity.

Humidifier. A device which causes water vapor to be diffused into the atomophere of an enclosure, as in a freight car, storage compartment.

Hygroscopic. Having the ability to readily absorb and retain moisture.

I

Impact strength. Resistance of a material or product to shocks such as from dropping and hard blows.

Implosion. A bursting inward; the opposite of an explosion. When the cavitations in an energized solution collapse, implosion occurs.

Indirect test. Any surface cleanliness test in which the parameter measured is the amount of soil removed from a surface.

Inhibitor. A substance or agent which slows or prevents chemical reactions, such as those of corrosion, oxidation, adhesive deterioration, mold, etc., even though present only in small quantities.

Insulation. (1) Separation of bodies by means of non-conductors to prevent transfer of electricity, heat, sound, etc. (2) The material used for insulating.

Internal surfaces. Internal surfaces are defined as those surfaces of assemblies, subsystems, and ground support equipment that contact service medium (gases or liquids) during use.

Intimate cushioning. A clean material used to protect additional packaging materials from puncture or damage caused by the clean item.

Intimate package. A clean material closure, wrap or cantainer that will have intimate contact with, or is environmentally adjacent to, the clean item or surface, and is sealed to provide a barrier to external contaminants and environments.

K

Kraft. A chemical wood pulp made by the sulphate process, or paper or paperboard made from such pulp. It is brown in color and is the strongest pulp product made from wood.

L

Lading. The load or material packed in a shipping container or vehicle.

Laminant. An adhesive designed for the purpose of combining and bonding a combination of films, foils, plastics, papers or other material in sheet or web form.

Laminar airflow. Airflow in which the entire body of air within a confined area moves with uniform velocity along parallel flow lines.

Laminar airflow clean work station. A work station in which the laminar airflow characteristics predominate throughout the entire air space.

Laminar airflow room. A room in which the laminar airflow characteristics predominate throughout the entire air space.

Laminated film. An adhered combination of two or more films or sheets made to improve overall characteristics.

Limited linting. The term limited linting applies to towels, garments, and other fabric materials which ahve been tested and proven to exhibit limited shedding or linting characteristics.

Localized clean operation. Operations conducted under locally maintained environment provided by tenting and conditioned air source.

Logistics. The procurement, maintenance, and transportation of material.

M

Materials cleaning room. A materials cleaning room is a room immediately adjacent to the clean room, equipped with vacuum lines, ultrasonic cleaners, and other mechanical devices for cleaning parts, tools, and materials immediately prior to their entry into the clean room.

Membrane filter. Cellulose plastic porous membrane material with controlled pore sizes ranging from 5 microns downward to approximately 8 millimicrons, composed of 15 to 20 percent solid material and 80 to 85 percent void.

Microbe. An organism of microscopic or submicroscopic size, generally including viruses, rickettsiae, bacteria, algae, yeasts, and molds.

Micron. A unit of measurement equal to one-millionth of a meter or approximately 0.00003937 inch (e.g., 25 microns are approximately 0.001 inch).

Migration. Act of changing locations ; moving from place to place, as fine dust is moved by air currents or agitation.

Mil. A unit of linear measurement, equivalent to 0.001 inch.

Moisture-vapor-proof. (1) Not affected by moisture or vapor. (2) A barrier to moisture as a liquid or vapor.

Moisture-resistant material. A material which will not readily absorb moisture when subjected to conditions of high humidity for extended periods of time.

N

Noncritical surface. A surface of a fluid system which does not directly contact the service media.

Nonlaminar flow clean room. A room characterized by nonuniform airflow patterns and velocities.

Nonlaminar flow clean work station. A work station characterized by nonuniform air patterns and velocities.

Nonvolatile residue (NVR). Soluble (or suspended) material and insoluble particulate matter remaining after controlled evaporation of a filtered volatile liquid, usually measured in grams. Filtration is normally through a 0.45 micron or 0.8 micron membrane filter.

O

Opacity. Resistance of a material or body to transmission of light. The degree of opacity of paper is measured by an opacimeter.

Operational periods. That period of time when an environmental test chamber is classified as a controlled work area. Such periods will normally commence with cleaning and inspection or inspection to the requirements operational readiness and continue to completion of test.

Organic. Designating any chemical compound containing carbon.

Overseal. A secondary closure to prevent undetected tampering with the primary closure. An example is a tear-off aluminum seal placed over the replaceable closure of a large metal container.

Overwrap. (1) A wrapper applied over a product, package, carton, box, etc. (2) (verb) To apply an overwrap.

P

Packaging. The application or use of appropriate closures, wrappings, cushioning, containers, and complete identification to a single unit.

Packaging film. Any film or sheet material used as a packaging wrap or container, usually limited to thicknesses less than 10 mils.

Packaging, flexible. Packaging involving the used of such flexible materials as foils, films, paper, flexible sheeting, etc., to form the container.

Packaging material. Any substance used in or with a package, wrapping, container, closure, liner or coating, or a composition of matter derived therefrom.

Packing. The application or use of exterior shipping containers with the packages therein, together with necessary blocking, bracing, cushioning, weather-proofing, and exterior strapping of the shipping container to protect and preserve the integrity of the packaged item during shipment or extended storage.

Part. A part is defined as one piece or two or more pieces joined together which are not normally subject to disassembly without destruction of designed use.

Particle. A piece of matter with observable length, width, and thickness; usually measured in microns.

Particle counters. Automatic electronic devices designed to electronically separate, size, and count individual particles.

Particle size. Particle size is expressed as the apparent maximum linear dimension as implied unless otherwise specified.

Particulate matter. The general term applied to matter of miniature size, with observable length, width, and thickness, and contrasted to nonparticulate matter without definite dimension.

Permeability. Ability to be penetrated by gases or liquids.

Personnel cleaning chamber. A chamber equipped with shoe cleaning devices, vacuum lines, and other devices to remove dirt, dust, and lint from clothing prior to entrance into clean rooms.

Plasticizers. Chemicals added to rubbers and resins to impart flexibility, workability, or stretchability.

Plenum. An enclosed space in which the air pressure is greater than that of the adjoining outside area.

Potential of Hydrogen (pH). A symbol for the logarithm of the reciprocal of the hydrogen ion concentrations, expressed in gram atoms per liter of a solution; used to indicate acidity or alkalinity.

Precision cleaning. Final or fine cleaning accomplished in a controlled environment to remove minute quantities of contaminants to better than visual standards.

Precleaning. That cleaning which is accomplished outside of a clean area, for the purpose of removing contaminants such as rust, oxidation, grease, oil, heavy scale or soil deposits to control the amount of contaminants brought into the cleaning room.

Purge. To flow an inert gas or system media through a system (or line, tank, etc.) for the purpose of ridding the system of a residual fluid or for providing a positive flow of gas from some opening in the system.

Q

Quality control (QC). A process or test oriented operation for obtaining or manufacturing a uniform product within specified limits.

R

Radiation. The process of emitting radiant energy in the form of waves or particles.

Random flow clean room. Air enters the room through diffusers located on or near the ceiling and is exhausted through openings near the floor; air with this type room follows a random pattern.

Range. The difference between the maximum and the minimum of a set of variate values.

Reagent. A substance used to produce a characteristic reaction in chemical analysis.

Reliability. The probability that a system, subsystem, component, or part will perform its required functions under defined conditions at a designated time and for a specified operating period.

Residual flux. Waste products remaining as a result of welding or soldering.

Rinse test. A test to determine cleanliness by entrainment or by solution of soluble materials with a suitable rinsing liquid; the liquid is sloshed or agitated over the critical surfaces of the component to ensure entrainment of particles.

S

Seal, pressure. (1) A seal that will retain pressure in the package. (2) A bond effected by pressure-sensitive adhesives.

Seal, pressure-sensitive. A package closure made by pressing together, manually or by pressure rollers or jaws, two areas which are coated with a special pressure-sensitive adhesive.

Shedding. (See Slough).

Shroud. (1) A protective cover of barrier material fashioned with a top, four sides and bottom.

Significant surface. The surface of a part, component, or system which contacts the operating medium of a system and requires a specified level of cleanliness which must be maintained for proper operation.

Slough. To release particles of the base material as a result of flexure, erosion, or abrasion.

Smut. The accumulation of noticeable amounts of nonadherent reaction products on chemically treated metal surfaces, usually resulting from cleaning or etching.

Solvent. That solution or constituent of a solution which exhibits the capability to dissolve other substances through chemical action.

Static electricity. Stationary charges of electricity which sometimes develop on surfaces during handling or in machine operation. May cause undesired attraction, sparking, etc.

Storage life. The period of time during which a packaged product can be stored under specific conditions and remain suitable for use. Sometimes called SHELF LIFE.

Strength. The mechanical properties of a material which permit it to withstand parting or distortion under the application of force.

Surface tension. A phenomenon of molecular attraction between the molecules of a liquid which tends to contract the exposed surface to the smallest possible area; expressed as dynes per centimeter.

T

Tape, pressure sensitive. A type of tape that is coated with an adhesive which adheres under pressure and does not require moistening, heat, or solvent for activation.

Tensile strength. The resistance of a material to longitudinal tension stress.

Thermoplastic. Capable of being repeatedly softened by heat and hardened by cooling.

Threshold limit value (TLV). A guideline between safe and probably dangerous concentrations having adverse effects on personnel.

Translucent. Permitting passage of light but diffusing it so that objects cannot be seen clearly.

Tuck. The folds which comprise the side walls of square and automatic-type bags, which are folded (tucked) in to permit the bag to be packed flat.

U

Ultrasonics. The physical science of those acoustic waves that oscillate in the approximate range of 18 to 80 kHz.

V

Vacuum seal. All air has been removed when seal is applied and this air-free state can be maintained indefinitely.

Vertical laminar airflow room. A room equipped with ceiling HEPA filters, with a grated or perforated floor for the exhausting or air issuing from the ceiling filters; the airflow is vertical, and moves within the walled area along essentially parallel lines at uniform velocity.

Viable. Capable of living; growing, or developing; metabolizing.

Visibly clean. Freedom from surface particulate matter approximately 50 microns is larger and from all films other than known innocuous films.

Visual cleanliness. The degree of freedom from contaminants that may be detected by the unaided eye; special lighting effects, ultraviolet light, wipe test, water break test, and similar means may be used as techniques to determine visual cleanliness.

Volatile. Easily passing from a liquid into a gaseous state. Subject to rapid evaporation. Having a high vapor-pressure at room temperature.

Volatile corrosion inhibitor. A chemical which slowly gives off vapor that reduces or is inhibitive to corrosion; usually applied to paper used in packaging ferrous metal products.

W

Water-tight. That quality of a container or package by which it prevents the passage of liquid water into or out of the package.

Work station. A work bench or similar working enclosure.

2.2 References.

1. Cleaning Conference Proceedings, MSFC-NASA, Huntsville, Alabama, January 1966.

2. Clean Room and Work Station Requirements, Controlled Environment, Fed. Std. 209, 10 August 1966.

3. Clean Room Technology, NASA SP-5076, Useller, 1969.

4. Contamination Control Handbook, NASA SP-5076, Sandia Laboratories, 1969.

5. Contamination Control Principles, NASA SP-5045, Sandia Corporation, NASA Office of Technology Utilization, 1967.

6. Contamination Control Technology, MIL-HDBK-407, January 1972.

7. Definitions for Contamination Programs, MSC-STD-C-1, August 1966.

8. Degree of Cleanliness, Cleaning, Controlled Environment and Protection Requirements, MIL-STD-1246A, May 1966.

9. General Solution Handling, Cleaning and Packaging Procedures, Technical Micronics Control, Inc., Huntsville, Alabama, 1970.

10. Glossary of Packaging Terms, Fed. Std. 75, The Packaging Institute, Inc., New York, New York, 1955.

11. Handbook for Contamination Control on the Apollo Program, NASA 5300.3, Washington, D.C., August 1966.

12. Microscopic Sizing and Counting Particles from Aerospace Fluids on Membrane Filters, ASTM-D-2390.

13. Modern Packaging Encyclopedia, Vol. 44, No. 7A, McGraw-Hill, Inc., New York, New York, July 1971.

14. "Packaging Materials and Methods, Pro and Con On," J. M. Pilcher, Contamination Control Journal, Spetember 1966.

15. Particle Size Measurement, ASTM Special Tech. Publ. No. 234, Philadelphia, Pa., 1958.

16. Quality Control, Technical Micronics Control, Inc. Huntsville, Alabama, 1970.

17. Sizing and Counting Airborne Particulate Contamination in Clean Rooms and Other Dust-Controlled Areas Designed for Electronic and Similar Applications, ASTM-F-23.

18. "Static-Dissipation Packaging Films," Dan C. Anderson, Contamination Control Journal, February 1967.

19. Technical Order Standards and Guidelines for the Design and Operation of Clean Rooms and Clean Work Stations, T.O. 0025-203, Published under authority of the Secretary of the Air Force, 1 July 1963.

20. The Encyclopedia of Chemistry, George L. Clark and Gessner G. Harvley, Reinhold Publishing Corporation, New York, New York, 1966.

21. The Laminar Airflow Clean Room Handbook, Boyd Agnew, Agnew Higgins, Garden Grove, California, 1968.

SECTION 3

ABBREVIATIONS

3.1 Abbreviations defined.

1. A.C.S. American Chemical Society.
2. ADCAD. Auto radiographic detection of contamination by absorption/desorption.
3. AMC. Army Material Command and Army Missile Command.
4. A/ft^2. Amperes per square feet.
5. ARP. Aerospace Recommended Practice.
6. asf. Amperes per square feet.
7. ASTM. American Society for Testing and Materials.
8. ^oC. Degrees Celsius.
9. CEF. Controlled Environmental Facility.
10. ft^3/min. Cubic feet per minute.
11. C.F.C. Consolidated Freight Classification.
12. cfm. Cubic feet per minute.
13. cm. Centimeter.
14. CP. Chemically pure.
15. D.O.T. Department of Transportation.
16. emf. Electromotive force.
17. ^oF. Degrees Fahrenheit.
18. F.C.C. Federal Communication Commission.
19. ft/min. Feet per minute
20. g. Gram.

21. GOX. Gaseous oxygen.
22. HEPA. High efficiency particulate air filter.
23. I.C.C. Interstate Commerce Commission.
24. I.S.O. International Standards Organization
25. JSC. Johnson Spacecraft Center.
26. kc. Kilocycle.
27. kHz. Kilohertz.
28. KSC. Kennedy Space Center.
29. LOX. Liquid oxygen.
30. MAC. Maximum allowable concentration. Now referred to as TLV.
31. mg. Milligram.
32. mg/l. Milligram per liter.
33. mm. Millimeter.
34. MSFC. Marshall Space Flight Center.
35. MVTR. Moisture-vapor-transmission rate. (See WVTR).
36. NAS. National Aerospace Standard.
37. NASA. National Aeronautics and Space Administration.
38. NPC. NASA Process Control.
39. NVR. Nonvolatile residue.
40. pH. Potential of Hydrogen.
41. P.I. Packaging Institute.
42. ppm. Parts per million.
43. lb/in^2. Pounds per square inch.
44. QA. Quality assurance.

45. QC. Quality control.

46. RH. Relative humidity.

47. SAC. Strategic Air Command.

48. TLV. Threshold limit value.

49. T.O. Technical Order.

50. μ. Micron.

51. V. Volts.

52. W.G. Water gage.

53. wt. Weight.

54. WVTR. Water-vapor-transmission rate. (See MVTR).

3.2 References.

1. Clean Room and Work Station Requirements Controlled Environment, Fed. Std. 209, 10 August 1966.

2. Clean Room Technology, Useller, NASA SP-5074, 1969.

3. Contamination Analysis and Control, James L. Dwyer, Reinhold Publishing Corporation, New York, 1966.

4. Contamination Control Handbook, NASA SP-5067, Sandia Laboratories, 1967.

5. Contamination Control Principles, NASA SP-5045, Sandia Laboratories, 1967.

6. General Solution Handling, Cleaning, and Packaging Procedures, Technical Micronics Control, Inc., Huntsville, Alabama, 1970.

7. Glossary of Packaging Terms, Fed. Std. 75, 1955.

8. Quality Control, Technical Micronics Control, Inc., Madison, Ala.

9. Sizing and Counting Airborne Particulate Contamination in Clean Rooms and Other Dust-Controlled Areas Designed for Electronic and Similar Applications, ASTM-F-25.

10. Technical Order Standards and Guidelines for the Design and Operation of Clean Rooms and Clean Work Stations, T.O. 0025-203, Published under authority of the Secretary of the Air Force, 1 July 1963.

SECTION 4

REQUIREMENTS FOR CLEAN PACKAGING

4.1 Development of a precision packaging requirement. It is the function of the packaging engineer to select the appropriate materials and methods to maintain the integrity of a precision cleaned product. To best fulfill this responsibility, he should know as much as possible about the part, its functions and cleanliness criticality. Figure 1 shows the basic packaging steps and the sequence in which they are normally performed.

Although there are no set rules or procedures, the following list may be used as a guide for developing a precision packaging requirement when the required cleanliness level to be maintained is known: (Ref 7):

(a) Determine the optimum packaging material based on resistance to sloughing and compatibility with the cleaned item and any functional lubricant. Transparency is preferred.

(b) Develop methods for purchasing, storing, and handling clean packaging materials.

(c) Develop procedures for sampling and measuring contamination levels of packaging materials.

(d) Provide cleaning capabilities for packaging materials where indicated.

(e) Determine the optimum packaging and closure techniques.

(f) Provide for temporary protective packages and in-process handling and storage containers.

(g) Develop methods for indicating precision packaging and level of cleanliness (color code, label).

(h) Develop tamper-proof seal devices.

(i) Design the package to allow the least possible relative motion between the part and the packaging material.

(j) Develop storage or inventory procedures that will assure the integrity of the package.

(k) Provide protection, where indicated, beyond the precision packaging in accordance with MIL-P-116.

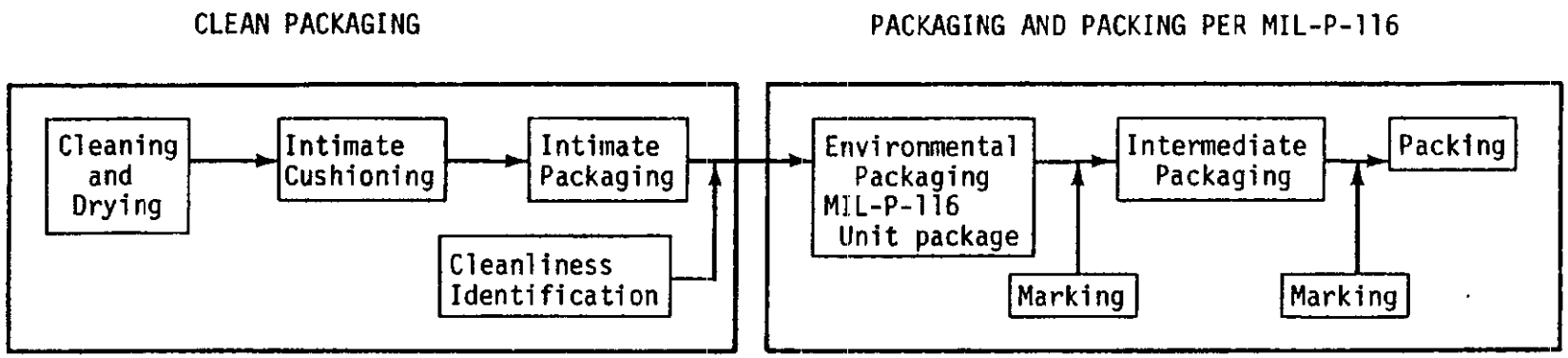

Figure 1. Basic steps in clean packaging and their normal sequence

(1) Develop a "clean" opening process. Tearing open clean packages should be prohibited as the tearing action generates heavy sources of particulate contamination.

4.1.1 Determination of required cleanliness levels. In determining the cleanliness level to be maintained by clean packaging, primary consideration should be given to the item or class into which the item belongs and its functional cleanliness requirements. If clean packaging requirements are critical, it is preferable that a specification be prepared for each item of entity to be packaged. However, due to the large number of parts or assemblies involved in some programs, it may be more practical to establish some system of classes or methods into which most of the items can be conveniently categorized. The determination of the type of grouping adopted will depend on conditions such as the following:

(a) The degree of cleanliness required.

(b) The material composition of the items being packaged.

(c) The configuration of the items being packaged.

(d) The intended use of the items, including other materials with which it will be in contact and the criticality of the operation. (Ref 3).

Other considerations are the availability of clean room and environmentally controlled areas and an establishment of cleanliness levels among contractors. It is common practice to establish cleanliness levels for an entire functional system when extensive and complex projects are involved. Each contractor contributing to such a project often establishes his own standards of cleanliness to meet the system requirements. This method of operation, though usually satisfactory, is less preferable than a full coordinated establishment of cleanliness levels among the various contractors. The latter method would probably reduce conflicts, recleaning and repackaging, and additional costs in subsequent assembly, inspection, and testing operations.

4.1.2 Selection of packaging materials. The adequacy of any material to protect an item from being contaminated is dependent on the cleanliness level that must be maintained. This can cover a wide range of levels. To better relate material performance criteria to required cleanliness levels, the principal qualities that a material should possess are categorized as follows:

(a) Barrier to external environments. A good barrier should be

capable of excluding those contaminants in the external environments which would cause contamination of the packaged item.

(b) Minimum contributor of contamination. An ideal material would not in itself contaminate the packaged item or adjacent environment by release of particles from sloughing or contact or from emission of vapors.

(c) Compatible for use in hazardous environments. A material should not contribute to an explosive, flammable, or corrosive condition when exposed to environments containing concentrations of oxygen and explosive mixtures, volatile vapors, hypergolic propellants, and other flammable substances.

(d) Packaging materials must be compatible with the hardware being clean packaged. (Ref 5).

An evaluation of any group of materials to meet the requirements for a specific application of clean packaging may reveal that no one material possesses all of the required qualities and characterisitics. This is especially true as the required cleanliness level becomes more stringent. In fact, no single film possesses all of the desired characteristics to a high degree - if there were such a material, its universal selection for clean packaging would be clearly indicated and required. Instead, several films and materials are being used, each having advantages and limitations. (Ref 1).

Depending on the specific packaging requirement, the following characteristics should be evaluated for applicability of the packaging material:

(a) Tensile strength. Tensile strength is quite literally the amount of force necessary to pull a material apart. It is usually reported in pounds per inch of width necessary to pull the material apart. For films, the usual units are lbs./square inch of original cross-sectional area.

(b) Formability. Formability is the capability of forming to a desired shape or configuration. The flexible foils and films are the most easily formed. The rigid materials require more extensive preforming or molding operations.

(c) Resistance to oil and grease. This resistance is the relative rate at which ordinary oils and greases may be expected to penetrate packaging materials. Grease and oil resistance is

of concern in film selection for applications where parts have residual oils, e.g. hydraulic parts.

(d) Resistance to blocking. The blocking test ascertains the maximum temperature to which material may be subjected without sticking to itself or to the product. Films should not block at temperatures below 200 degrees Fahrenheit.

(e) Sealability. To ensure a tight closure of a bag or package, a film must be heat sealable. Sealability may be expressed as a "coefficient of heat sealability", which is the ratio of the tensile strength of the heat-sealed film to that of the original film. A strong seal is important expecially when large heavy items are being packaged.

(f) Transparency. The advantages of transparency are obvious in that the part can be easily and positively identified, and to some degree inspected, without removal from the sealed package. The application of a haze test is important to products or in uses where true color and visibility are required.

(g) Cleanability. A film or closure device must be capable of being cleaned to the desired level without being softened or chemically attacked.

(h) Sloughing or shedding. Particles may slough from a film if it is is subjected to motion, vibration, flexing, or abrasion during handling or transport. The size and quantity of particles generated depend on the type of material, surface finish, and the amount of activity seen by the material. Sloughing results in recontamination of the once-clean part. Sloughing is a very important limitation, to varying degrees, of all films. Of those currently available, nylon is the least likely to produce particles which will contaminate the product. All materials have a tendency to slough off particles to some degree when subjected to certain conditions. Rigid materials with a hard, smooth surface finish are less susceptible to sloughing. A suitable procedure for measuring sloughing tendencies of films should provide a measure of total sloughing resulting from both flexing and abrasion unless it can be determined that one or the other mechanism predominates.

(i) Static charge. The electro-static charge formed and retained on the surface of a material when two objects contact one another and are then separated results in two undesirable conditions:

(1) The charged surface attracts contamination particles from the adjacent environment, and (2) the high-energy discharge is capable of igniting electroexplosive devices and flammable materials and causes interference in the operation of sensitive electronic components. Clean packaging materials should possess adequate anti-static properties particularly when they are used with explosive devices.

(j) Elongation. The elongation index is important in packaging because it represents the amount a material will stretch before breaking or rupturing. A large value is an index of toughness, since it indicates a material will absorb a large amount of energy before breaking.

(k) Tear strength. Propagated tear strength (Elmendorf Test - ASTM D-1922) is the force necessary to continue tearing a sample after a nick has been made. Initial tear strength (Graves Test - ASTM D 1004) is the force required to tear a material. High tear values may be needed for package strength. However, low tear values are necessary and useful for easy opening of some package types. High resistance to tear is normally, but not always, associated with material having low tensile strength and high elongation.

(l) Puncture resistance. Puncture resistance, like tear strength, is a significant characteristic of packaging films.

(m) Low water-vapor-transmission rate (WVTR). This value is significant for packaging products that must be protected from gaining or losing moisture to the surroundings. The WVTR, also referred to as moisture-vapor-transmission rate (MVTR), is related to the protection of packaged parts from corrosion, where moisture can produce it.

(n) Gas transmission. Gas transmission is usually reported in cubic centimeters of gas that can pass through a square meter of film in 24 hours when the gas pressure differential on one side of the film, at a specific temperature, is one atmosphere greater than that on the other side. This value is vital in vacuum and gas packaging. Some plastic films contain plasticizer will not be detrimental to the product.

(o) Impact strength. The impact strength is useful in predicting resistance of a material to breakage from dropping or other quick blows.

(p) Compression strength. Compression strength is an index of the stackability of filled containers.

(q) Interaction with hazardous materials. A material should not give off particles or vapors which would contribute to an explosive, flammable or corrosive condition when exposed to hazardous materials.

4.2 Packaging facilities. Clean packaging is accomplished under the same controls applicable to cleaning and assembly of hardware.

4.2.1 Cleanliness requirements of packaging areas. In order to accomplish its objectives, all final precision cleaning and clean packaging operations must be carried on in a clean work area which will meet or exceed the cleanliness level required to prevent degradation of the cleaned item. The degree of protection needed may range from a Class 100 clean room to a nonlaminar airflow clean room with some lesser degree of particulate and environmental control. (Ref 2). The controlled environment shall be capable of maintaining as applicable a specified level or less of particulate matter in the atmosphere, a specified level or less of unwanted gases, a specified relative humidity and a specified temperature.

Any preparation of clean packaging material such as unpacking from the original container, cutting, trimming, or initial heat sealing, should be done in the exhaust or downstream portion of the clean room. Items connected with these operations should be brought into the immediate vicinity of the clean parts only during actual use.

4.2.2 Clean room regulations.

4.2.2.1 Clean room garments. Designated protective clothing must be worn at all times by individuals entering the clean room. (Ref 9). These garments should not be worn outside the clean room or change room. Garments currently available for clean rooms or clean work areas are:

(a) Head covers, snoods, hoods (eye and face openings).

(b) Smocks, coveralls, and coveralls with hoods.

(c) Foot covers, foot socks, booties.

(d) Gloves, finger cots.

4.2.2.2 Visitors. Clean rooms are restricted areas and access to them must be limited to authorized individuals. Visitors to the clean

room must observe all the rules to which the clean room employees are required to adhere. This should include top management as well as supervisors.

4.2.2.3 Clean room materials and operations. Supervisor disciplines determine the quality of a clean room product. Supervisors must enforce good housekeeping practices. There are many regulations pertinent to various packaging processes to which adherence should be required. The following general rules and any other deemed applicable should be enforced to assist in the successful operation of the clean room.

4.2.2.3.1 Paper materials. Only low lint clothes are acceptable. Paper materials of any type will not be allowed within the clean room until an analysis has been made by the Quality Control labs to determine its particulate count. (Ref 5). No ordinary paper pads, notebook, manuals, or writing paper of any description will be permitted in Class 100,000 or better clean rooms. No ordinary writing pencils, pens, erasers, crayons, or chalk will be permitted. Notes and records will be kept on lint-free watchmaker paper, plastic sheet, or equal, using ball point pens or other suitable non-dust-generating materials. Blueprints, work specifications and other instructions will be printed on plastic or covered with plastic film or other lint-free, non-dust-generating materials. At no time will paper in any form be torn or mutilated within a clean room. Paper towels and cloth towels are prohibited in the clean room, personnel and material cleanup rooms, and locker rooms.

4.2.2.3.2 Parts and tools. Parts and tools should be kept at the work station and as clean and orderly as possible. Parts have to be clean before assembling. Exposed parts should never be left on the work bench. Tools should be kept in drawers, wire baskets, or other suitable containers. Tool racks should be utilized. Tools should not be kept in toolboxes, felt-lined cases, or leatherette cases. They may be kept on clean polyurethane foam wipers. (Ref 4).

All tools should be constructed of corrositon-resistant metals such as stainless steel or minimum particle-generating materials such as hard plastic. Tools containing rubber, wood, etc., should not be used. No metal or degrading tool of any sort should be used except as authorized. All serrated or knurled-jaw holding tools, such as pliers, pipe wrenches, vise grips, and vises should have their jaws padded with soft metal or other suitable protection. The use of adjustable tools, such as crescent wrenches, should be maintained. All tools should be verified clean prior to use and they should be maintained visibly clean. Only approved lubricants may be used.

4.2.2.3.3 Operations. All work should be done on a clean surface and never on any substance which could transfer contaminants to the work piece. Only approved, clean, low-lint wiping cloths or clean polyurethane wipers should be used for any cleaning operations. Compressed gas should be supplied from a source which is equipped with properly maintained dehydrators and filters for removing contamination. Excess storage of any items should not be permitted in the clean room.

4.2.2.3.4 Exhaust facilities. Cleanup of parts, test equipment, and test hardware should be accomplished in the airlock or other outside facility prior to being moved into a packaging area. The clean room should be free from all oil and grease not specifically authorized. Exhaust facilities should be used when working with gage fluids, epoxies or other toxic chemicals. Operations such as lapping, filing, and deburring should be prohibited in the clean room areas unless all contamination is isolated and exhausted from the areas. Exhausting from some operations may be accomplished through the central vacuum system.

4.3 Personnel. Clean packaging is accomplished under the same controls applicable to cleaning and assembly of hardware.

4.3.1 Elements of good employee selection and participation. Personnel selected for training to work in controlled environment facilities where high order of cleanliness are required shall meet the following requirements: (Ref 9).

(a) Non-allergic to conditions, materials, or solutions used in the controlled environment.

(b) Psychologically suited for the environment, that is, no evidence of claustrophobia or nervous conditions such as itching or scratching.

(c) Willingness to follow rigid rules for dress, behavior and personal hygiene required by the degree of contamination control.

(d) No physical disorders that tend to raise the contamination level above established normal levels such as excess skin flaking, dandruff, nasal discharge, respiratory diseases, or high amounts of acid in moisture of hands.

(e) Ability and willingness to follow specifications and procedures without deviation or substitution in performing a required operation, process, or sequence.

Personnel failing to meet the requirements above should not be ruled ineligible to work with contamination sensitive articles outside controlled environment facilities so long as their activity in the area to which they are assigned does not endanger the cleanliness of the article and they are properly trained to the requirements of this procedure. All personnel selected to work in an activity that will bring them in contact with contamination sensitive articles should be capable of successfully completing a qualifying training program.

4.3.2 Responsibilities and regulations in the clean room.

4.3.2.1 Responsibilities. Employees' attitudes are of prime importance. They must be prepared to meet the challenges of clean room work before they are allowed to work in the room. They should be instructed to consider everything but their immediate work area as being contaminated, and be capable of recognizing the common types of contamination (lint, paint chips, etc.). They should be advised to report any of this type contamination to their supervisor, and they should also consider any work or tools dropped on the floor as being contaminated. Any work or tools which they consider to be contaminated, or of which they are in doubt, should be reported to their supervisor. Personnel should restrict their movement as much as possible to prevent stir-up of settled particulate matter on the clean room floor, especially near another's work area.

4.3.2.2 Regulations. Regulations in regard to clean room personnel should be considered. Some of these are:

(a) Personnel having mustaches or beards should be required to wear a cover of some type; either face mask or hood with just eye openings.

(b) Hair should not be combed in the clean room and should be confined under caps or hoods.

(c) Fingernail polish and cosmetic should never be worn or applied in the clean room.

(d) Jewelry in the form of large rings, necklaces, earrings, lockets, watches, bracelets, should not be worn.

(e) Valuable items such as wallets may be carried into the clean room in street clothes pockets, provided that they are not removed inside the clean room, but personal items such as keys, coins, cigarettes, matches, handkerchiefs, watches, tissues, and combs should not be allowed to enter the clean room.

(f) Eating food, chewing gum or tobacco, or smoking in the clean room should not be allowed.

(g) Nervous relief type mannerisms such as scratching head, rubbing hands or parts of the body, or similar type actions should be avoided.

(h) The specified protective clothing should be worn in the prescribed manner.

(i) Finger cots or gloves should be worn if required, or if an employee's hands are severely chapped.

(j) Glasses, if worn, should be washed and dried with a lint-free towel.

4.4.3 Personal hygiene requirements. All personnel should receive periodic indoctrination on the importance of personal hygiene in clean room operations. All clean room personnel should practice clean room habits and observe clean room regulations to maintain a healthy environment. Personnel with colds, temporary coughing, sneezing, or severe sunburn should be assigned to temporary jobs outside the clean room until they are sufficiently recovered. Clean room personnel should take all necessary precautions against receiving severe cases of sunburn. This precaution is necessary in order to precent peeling skin from contaminating a part or the surrounding area. (Ref 9). The high degree of cleanliness required necessitates the indoctrination of all clean room personnel in the development of the following habits:

(a) Bathe frequently.

(b) Shampoo hair weekly and take action against heavy dandruff.

(c) Wear clean under and outer garments to insure maximum cleanliness.

(d) Avoid scratching or rubbing exposed areas of the body.

(e) Male personnel are to shave daily.

(f) Hands, fingernails, and face should be kept clean.

4.4 Clean room training program. In order to achieve and maintain a high degree of cleanliness and contamination control, it is imperative that all personnel involved in the precision packaging of contamination sensitive articles are properly trained in contamination control and

precision packaging techniques (Ref 6). The organization of a training program should incorporate factors encouraging human motivation into its design. Clean room personnel should be fully aware of their responsibilities and the consequences of their actions. Proper instruction and training of personnel will tend to reduce the high cost and loss of time resulting from the improper application of packaging techniques.

4.4.1 Course outline. A minimum course of instruction for all personnel whose activities may bring them in contact with contamination sensitive articles and the packaging of these articles should contain as a minimum, the following elements:

(a) Definition of terms associated with contamination control and precision packaging.

(b) A presentation of the need for contamination control and the consequences of contamination.

(c) A discussion of the origin and types of contamination including internal sources created by manufacturing, handling, or packaging activities, external sources present in the prevailing environment, and personnel-created contaminants.

(d) A presentation of the devices and techniques used to achieve and control cleanliness during precision packaging including applications and limitations including:

(1) Various classes of controlled environments, clean rooms, clean work stations and their design criteria.

(2) Personnel control and occupancy in controlled environments.

(3) Apparel and laundering.

(4) Clean packaging materials and procedures.

(5) Tamper-proof seals on clean closures.

(6) Methods of measuring and verifying contamination levels.

4.4.2 Instructors. Training or instruction may be performed by responsible supervision, a designated instructor, experienced employees, or outside contractors.

4.4.3 Training aids. The use of training aids are helpful and are encouraged in developing a training program. Some examples of these aids are photographs, charts, displays, guided tours of typical operations, and various publications and specifications.

4.4.4 Testing and certification. Upon completion of the course, the trainee should be tested on each element of instruction. An adequate retention and understanding of the subject should be shown for an employee to qualify for working in contamination sensitive activities. A card certifying an employee's ability to work in these areas should be presented. (Ref 4,6).

4.4.5 Refresher courses. Personnel should periodically receive refresher courses and be recertified in order to continue their activities in the clean room. Advantages of refresher courses are:

(a) The necessity for conscientious attitudes and adherence to all regulations can again be emphasized and problems experienced by the personnel since the initial training program can be discussed.

(b) New techniques and materials can be presented and understood more thoroughly than if explained while personnel are engaged in normal working situations.

4.5 References.

1. "Antistatic and Precision Clean Packaging Materials and Methods", Dan C. Anderson, The Richmond Corporation, presented at the 5th Annual Contamination Control Symposium, 1969.

2. Clean Room and Work Station Requirements, Controlled Environment, Fed. Std. No. 209, 10 August 1966.

3. Contamination Control Handbook, Sandia Laboratories, NASA SP-5076, 1969.

4. Contamination Control Program Requirements, Vol. 1, MSCM 5325, September 1970.

5. Contamination Control Technology, MIL-HDBK-407, January 1972.

6. Contamination Control-Training Course Outline, K.F. Lindell, D. M. Garst, Sandia Laboratories, NASA Contract H-13245A, March 1969.

7. Handbook for Contamination Control on the Apollo Program, NASA Handbook 5300.3, Washington, D.C., August 1966.

8. Quality Control, Technical Micronics Control, Inc., TMC SPEC. No. 6202, Madison, Alababa, 15 July 1968.

9. Standards and Guidelines for the Design and Operation of Clean Rooms and Clean Work Stations, T.O. 00-25-203, 31 August 1965.

SECTION 5

MONITORING PACKAGING MATERIALS AND OPERATIONS

5.1 Introduction. Prior to entry into a clean room, all parts, tools, equipment and material must be cleaned. The selection of cleaning methods is dependent on the type of contaminant, the materials of construction of the items to be cleaned, and the degree of cleanliness required.

Since the objective of clean packaging is to maintain a specified cleanliness level of the enclosed item, inspection or testing techniques must be applied to both materials and packaging operations to verify that this cleanliness level is, in fact, maintained.

Parts which are sensitive to particulate matter or which when installed in a system are sensitive to particulate matter, should never be handled by unprotected hands. Such precision components should always be handled by tools or gloved hands.

5.2 Clean room equipment.

5.2.1 Garments.

5.2.1.1 Sampling. Two percent of each shipment should be tested to assure that the garments meet the particulate level for the clean room in which they will be worn. Particulate determination should be conducted in an environment equal to or better than the environment where the garment was cleaned. (Ref 7). Points of garments to be checked should be in accordance with, or a method similar to that established by ASTM F 51-65T, or T.O. 00-25-203. Coveralls, hoods, and shoe covers should be worn by all personnel in the inspection area, and gloves should be worn while handling the garment.

5.2.1.1.1 Visual inspection. Garments and accessories should be inspected for needed repairs, missing snaps, and broken zippers. Any evidence of the breakdown of fabric in the garment, such as loose fiber ends protruding from the surface, should be cause for rejection of the garment. Sample garments should have no visible hydrocarbons such as oil stains or grease.

5.2.1.1.2 Particulate count. Methods of particulate sampling and microscopic counting methods shall be performed in accordance with ASTM F 51-65T or T.O. 00-25-203. The manual method for sizing and counting particulate contaminants is used for determining the detachable particulate contaminant five microns or larger, in and on the fabric of

clean room garments. (Ref 6). It may also be used to determine if a fabric exhibits limited linting characteristics.

Filtered air is drawn through five designated 0.01 square foot areas of a single thickness of the garment fabric at a rate of 14 liters per minute for one minute per area. The air drawn through the garment subsequently passes through a membrane filter disc, impinging the entrained particles upon the filter surface. The filter disc is then examined microscopically to determine the number of particles larger than five microns removed from the garment. (Ref 6).

5.2.1.2 Intimate packaging. All garments should be packaged individually in a polyethylene bag which should be hermetically sealed in the clean room prior to exposure to an uncontrolled environment.

5.2.2 Clean room containers. The clean products will seldom be cleaner than the container which holds it. Therefore, the choice of and the cleaning of material handling equipment is of the utmost importance.

Normal handling equipment is of the "tote box" or "plastic bag" type. Clean parts should be transported in cleaned tote boxes. These tote boxes should contain a wire mesh base or holding fixture to support cleaned parts. The top of this unit should be a see-through panel and the surfaces of the containers should be smooth to prevent the generation of particulate matter. Cleanliness is of utmost importance. The care exercised in cleaning the container must be as good, or better than, the cleanliness of the part to be carried. Care also should be taken to prevent toe transporting of contamination from surface to surface in the clean room by containers.

There may be instances when the size or weight of an object will necessitate its being taken into a clean room by mechanized conveyances such as dollies, lift truck or cranes. Lift trucks used for this purpose should be the hand-operated, hydraulic type of those propelled by battery-powered motors. Lift trucks with internal combustion engines should be exluded from environmentally controlled areas or clean rooms. (Ref 2).

5.2.3 Tools and fixtures. Small hand tools used in the clean room must be as clean as possible, in good operating condition, and readily accessible for use. The tools must be cleaned prior to entry into the clean room and at scheduled intervals. The exact schedule should be determined on an individual basis. All cutting devices must be maintained in a sharp condition to minimize particle generation and ragged material edges.

Parts, racks, or baskets and tool racks used within clean facilities should be of round wire or rod, open construction, and with hard, smooth surface finishes. Racks of this type facilitate laminar airflow and minimize the collection of airborne contaminants.

Tools should always be supported when not in use in such a manner that they cannot pick up nor transfer contaminants. This can be accomplished by hanging or supporting tools on wire mesh racks or on holding fixtures. Workholding fixtures shall be readily cleanable, and shall support the work piece firmly in such a manner that it does not touch the work surface. (Ref 2, 7).

5.2.4 In-process storage. Items which are not packaged or closed immediately after cleaning should remain in the controlled environment and be further protected where practical by containers and covers to exclude possible contamination and unnecessary handling. Items being worked on in a more or less continuous manner while in a controlled environment shall be covered or closed during periods of inactivity. Protective covers on clean materials should be resealed if the contents will not be withdrawn for a significant period or if they are transported from one clean area to another

For in-process storage, cushioned containers made of low particle shedding materials should be used. For maximum protection, small, fragile or intricate components should be separated and stored in individual boxes or polyethylene bags. (Ref 4,7).

5.3 Cleanliness verification of packaging materials. Since the objective of precision packaging is the maintenance of a specified cleanliness level of the enclosed item, some inspection or testing techniques must be applied to verify that this cleanliness level is, in fact, maintained. One general type of verification procedures involves monitoring the cleanliness of the intimate packaging materials prior to use and observing precision packaging practices during subsequent packaging operations.

The most generally accepted method for monitoring the cleanliness of clean packaging films is set forth in Specification MSC-SPEC-C-25. The surface cleanliness requirements required by this specification are presented in Table I.

NOTE: Plastic films, including ordinary (non-antistatic) polyethylene, generate large electrostatic charges when handled, rubbed, or when one surface is separated from another as in opening a bag or unrolling a sheet of film. These charges can cause

attraction of large quantities of airborne particles to the surfaces of such film and may result in inordinately large particle counts unless precautions are taken to minimize exposure of clean film surfaces to the clean room atmosphere prior to testing for verification of cleanliness level.

5.3.1 Visual inspection. Visual inspection is the most common inspection method. No evidence of oil, grease, water, solvents, paints, ink, dirt, metal chips, decals, preservatives, or other foreign matter shall be permitted on either the external surfaces or the internal surfaces or the internal surfaces of packaging materials when inspection is made with the unaided eye. (Ref 1).

5.3.2 Ultraviolet light inspection. The external and internal surfaces of metallic closures shall be examined for evidence of fluorescence under ultraviolet light. Fluorescence areas that continue to fluoresce after hand wipe cleaning with solvent shall be rejected. (Ref 3).

5.3.3 Rinse test inspection. Bags for precision packaging applications shall be sampled in accordance with the following requirements, unless otherwise specified.

5.3.3.1 Preparation. The open end of the bag shall be heat-sealed. Using surgical scissors or other extremely sharp blade in order to minimize particle generation when cutting, one corner of the bag shall be cut off so that an opening not over 3/4 inch in length is created.

Plastic tubing for precision packaging applications shall be sealed at both ends of a length to give an inside test area of approximately one square foot and sampled for rinse test as for bags.

Plastic film (flat roll stock) shall be cut carefully with surgical scissors or other sharp blade to a length of 12 inches. The section shall be folded in half, sealed into a bag form in such a manner as to minimize exposure of the interior to airborne particles, and sampled for rinse test as for bags.

5.3.3.2 Rinsing. Through the opening created in preparation for the rinse test, 100ml of solvent (MSFC-SPEC-237A) per square foot of interior surface shall be introduced from a wash bottle or similar apparatus. A bag having less than one square foot of interior surface shall be considered as one square foot. The opening shall then be shut by a practical means. The exterior of the bag shall then be rinsed down with

Table I.

Precision packaging materials surface cleanliness requirements

Level	Particulate Distribution Per Square Foot of Surface Tested		Nonvolatile Residue Per Square Foot of Surface Tested
	Size Range[3] (Micron)	Quantity[3] (Maximum)	Maximum (mg)
1[1]	0-5	Not Counted[2]	1
	5-15	40	
	15-25	20	
	25-50	6	
	> 50	0	
2	0-5	Not Counted[2]	1
	5-15	50	
	15-25	25	
	25-50	10	
	50-100	5	
	> 100	0	
3	0-10	Not Counted[2]	1
	10-25	300	
	25-50	50	
	50-100	10	
	100-175	5	
	> 175	0	

Note 1 - Level 1 shall apply only to nylon films

Note 2 - Particles in this range are not counted; however, any obscuring of the filter grid lines shall be cause for rejection.

Note 3 - The particulate size ranges and quantities specified are designed for certain NASA applications. Requirements for other uses may differ and should be specified accordingly.

the same agent to prevent exterior particles from being picked up when the bag is decanted. The cleaning agent within the bag shall be agitated by a gentle but rapid sloshing.

5.3.3.3 Collection of sample. The cleaning agent within the bag shall be poured out through the same opening, held shut during rinsing, onto a microporous 0.45 or 0.8 micron membrane filter, 47 mm diameter.

5.3.3.4 Testing. The effluent of the rinse test shall be examined for particulate matter by the particle count method in accordance with ARP 598, MSC-SPEC-C-14, or equivalent. The nonvolatile residue of the solvent rinse shall be determined in accordance with ASTM D 2109 64. (Ref 8). Individual bags or pieces of material tested for cleanliness shall not be used to package precision cleaned items.

5.3.3.4.1 Particle count method. Particles are to be counted and tabulated in the following order: fibers, particles greater than 100 microns, 50-100 microns, 25-50 microns, 15-25 microns, and 5-15 microns. This method is not used for counting particles smaller than 5 microns. Fibers are counted as particles unless their length exceeds 100 microns. The size of a particle is determined by its greatest dimension. (Ref 2,5).

Apparatus needed for this method includes:

(a) Binocular microscope with ocular-objective combinations to obtain 40 to 45X and 90 to 150X magnifications. The latter objective should have a numerical aperture of 0.15.

(b) Normal counter.

(c) Microscope lamp, high intensity.

(d) Ocular micrometer scale.

(e) Stage micrometer, standard 0.01 to 0.1-mm scale.

Absolute counting of particles shall be accomplished as follows:

(a) Using forceps, position filter disc on filter disc holder and place on microscope stage.

(b) Adjust the mircoscope lamp intensity to obtain maximum particle difinition.

(c) A magnification of approximately 45X shall be used for

counting particles 25 microns or larger, approximately 90X for particles smaller than 25 microns.

(d) Using the microscope's horizontal and vertical traversing stage adjustments, systematically scan and count all particles on the entire filtering area of the filter disc, scanning each specified size range separately.

(e) Record results of particle count on appropriate data sheet and validate by initials or quality control stamp.

Statistical methods may be employed provided that the method shows agreement with the values of certified standard samples. To obtain the number of particles of a given size range, the number of particles on a representative number of grid squares on the filter disc is counted. From this count, the total number of particles which would be present statistically on the total effective filtration area of 100 imprinted grid squares is calculated.

(a) Using forceps, position filter disc on filter disc holder and place on microscope stage.

(b) Adjust the microscope lamp intensity to obtain maximum particle definition.

(c) Using the microscope's horizontal and vertical traversing stage adjustments, rapidly scan the filter disc to assure that particulate contamination is evenly distributed. Estimate the particulate population before proceeding with a count.

(d) If the total number of particles of a given particle size range is estimated to be between 1 and 50, count the number of particles over the entire effective filtering area.

(e) If the total number of particles of a given particle size range is estimated to be between 50 and 1,000, count the number of particles in 20 randomly-chosen grid squares and multiply this number by 5 to obtain the total statistical particle count.

5.3.3.4.2 Nonvolatile residue of solvent. Two methods are presented in ASTM D 2109-64 for determining the nonvolatile matter (the residue on evaporation) in halogenated organic solvents and admixtures thereof (Ref 16).

Method A is used for halogenated organic solvents or admixtures having less than 50 parts per million (ppm) nonvolatile matter; or where greated precision than plus or minus 10 ppm is required.

Method B is used for halogenated organic solvents or admixtures having more than 50 ppm nonvolatile matter or where precision of plus or minus 0.001 percent (10 ppm) is satisfactory.

5.4 Monitoring the item. In addition to monitoring the cleanliness, of packaging materials and operations, another method is widely used to verify the effectiveness of clean packaging. This is done by monitoring the cleanliness of the part immediately after its removal from the clean package. The receiving inspection, required by the quality control provisions established for the effected item, shall be performed in a clean area by qualified and authorized receiving inspection personnel. Receiving test sample packages should be selected at random to determine that the requirements are being met on a quality control basis.

Tables IIa and IIb (MIL-STD-1246A) prescribe the cleanliness levels established to provide a uniform set of criteria for specifying product cleanliness, based on contaminant size, distribution, and count. The use of these cleanliness levels provides a basis for specifying and determining cleanliness requirements.

The cleanliness levels of Tables IIa and IIb shall apply to surfaces, assemblies, components, or fluids. The following units of measure shall be used:

(a) Surfaces - Particles categorized by size and count per square foot of significant surface area. Nonvolatile residue in milligrams per square foot of significant surface area.

NOTE: Areas less than one square foot shall be considered as one square foot. Area may be estimated.

(b) Assemblies and components - Particles categorized by size and count per square foot of significant surface area. Nonvolatile residue in milligrams per square foot of significant surface area.

NOTE: Areas less than one square foot shall be considered as one square foot. Area may be estimated.

(c) Liquid - Particles categorized by size and count per 100 milliliters of fluid. Nonvolatile residue measured in milligrams per 100 milliliter of fluid sample.

Table II.

Classification of product cleanliness levels

Table IIa.			Table IIb. Non volatile Residue	
Cleanliness Level	Range Surface and Fluids	Quantity of Particulates	Level	Quantity NVR
10	5	Less than 3	A	Less than 1.0 mg
25	5 15 25	21 Less than 4 1	B	1.0 mg to 2.0 mg
50	5 15 25 50	180 25 7 1	C	2.0 mg to 3.0 mg
100	15 25 50 100	280 75 11 1	D	3.0 mg to 4.0 mg
200	15 25 50 100 200	4100 1100 180 16 1	E	4.0 mg to 5.0 mg
300	25 50 100 250 300	7000 1000 90 3 1	F	5.0 mg to 7.0 mg
500	50 100 250 500	11000 950 25 1	G	7.0 mg to 10.0 mg
750	100 250 500 750	6500 170 7 1	H	10.0 mg to 15.0 mg
1000	250 500 750 1000	1000 45 7 1	J	15.0 mg to 25.0 mg

(d) Gas - Particles categorized by size and count per cubic foot of gas.

5.4.1 Cleanliness inspection techniques. Various tests and techniques are used to verify the cleanliness of a precision packaged item. Table III presents the techniques required by MIL-STD-1246 for the testing of cleanliness of surfaces, assemblies and components, liquids and gases. Any of these tests, or demonstrated equivalents, may be used.

Table III.

Procedures for measurement of cleanliness levels (MIL-STD-1246)

Surfaces, Assemblies and Components	Liquids	Gases
ASTM-F-24	ASTM-D-2391	SAE-ARP-743
ASTM-D-2429	ASTM-D-2390	ASTM-F-25
ASTM-D-2391	SAE-ARP-598	ASTM-D-2544
ASTM-D-2390 or		ASTM-D-2390
SAE, ARP-598		

Other inspection techniques commonly used are described in the following paragraphs.

5.4.1.1 Visual inspection. External surfaces and accessible internal surfaces may be visually inspected for contaminants such as particles, moisture, corrosion, scale, and oil. The presence of these contaminants usually indicates improper or inadequate cleaning prior to packaging or rupture of the package during handling or transport. A special light source or borescope is usually needed to inspect internal surfaces. (Ref 9).

5.4.1.2 Microscopic inspection. External surfaces may also be inspected with a microscope to verify surface cleanliness.

5.4.1.3 Purging. In some systems or assemblies, internal and inaccessible surfaces and confined areas may be monitored by administering a purge gas and testing the gas as it is expelled from the system. A dry, filtered, inert gas should be used for this purpose. The three contaminants most commonly monitored by this method are:

(a) Particulates - Particulates are entrapped on a membrane filter and sized and counted by use of a microscope and ocular micrometer.

(b) Moisture - Moisture is measured by a moisture meter in parts per million by volume, by the dewpoint method in degrees Celsius (C) or other acceptable methods.

(c) Condensable hydrocarbons - Condensable hydrocarbons are measured by the scrubber method or other acceptable method.

Precision clean solvents may also be used in some systems in this same manner to test for particulates and nonvolatile residue.

While this method may be acceptable for some systems, it is not suitable for others because contaminants may be trapped in pockets or dead-end plumbing and therefore not be evident.

5.4.1.4 Continuity check. Electrical components and assemblies may be given a continuity check. A malfunction discovered by this method, however, might be attributable to either contamination of the package or to handling damage. (Ref 3).

5.4.1.5 Functional test. Functional tests involve removing clean packaged components from their packages, assembling them into a system, and conducting a functional test of the complete system. This may be sufficient for some applications, but is not considered a true test of clean packaging effectiveness because it does not consider handling damage or contamination introduced during the assembly process.

5.4.2 Rejection and retest. Failure of any sample packages to conform to any one of the requirements of the receiving inspection should be cause for rejection of the lot represented. Parts which have been rejected may be recleaned and repackaged and resubmitted for acceptance.

5.4.3 Log book record. A log book record should be maintained of all incidents of opening packages or closures for inspection purposes to insure traceability in the event contamination should occur. The record should show the date, responsible person, reason for opening, the condition of reclosing, and the disposition of the article.

5.5 Physical protection during receiving inspection.

5.5.1 Pneumatic, fuel, LOX, and hydraulic systems. During receiving inspection, components of pneumatic, fuel, liquid oxygen,

and hydraulic systems will be protected to prevent damage and minimize contamination as follows. (Ref 5):

(a) Examine the intimate bag for visible damage to determine acceptance or rejection of the item.

(b) Open the intimate bag in a manner that will permit resealing of the bag.

(c) Remove covers only as necessary to perform applicable inspecting operations.

(d) When a pneumatic test or purge is required during the functional inspection, use either nitrogen or filtered air as the test or purge medium.

(e) Covers that have been removed will be replaced with new material immediately following the completion of the inspection or the original cover may be used if they were carefully removed.

(f) After the receiving inspection is completed, replace the component in the intimate bag. Place an identification tag with assembly and handling restrictions, identification information, acceptance stamp and manufacturer's name in the bag in a position that will permit clear visibility of the information and prevent corrosion interaction. Purge the bag with nitrogen and heat seal the bag.

(g) Overpackage the component as necessary to prevent damage during handling, shipping, and storing operations.

(h) Receiving inspections must be performed in a clean room under controls to maintain cleanliness.

5.5.2 Gas bearing and slosh measuring systems. Components of gas bearing and slosh measuring systems shall be protected during receiving inspection as pneumatic system components except that the gas supply shall be specified and determined by MSFC-PROC-195.

5.5.3 Electronic components. Electronic components shall be protected during receiving inspection as follows:

(a) Remove the bagged item from the package.

(b) Open the plastic bag in a manner that will permit resealing of the bag.

(c) Remove protective caps and plugs only as necessary to perform inspection.

(d) Attach an approved mating connector to each electrical plug or receptacle before test connections are made.

Caution: Do not touch or attach a probe, test lead, or test clip to any connector pin or socket of any harness, cable, component, or equipment at any time for tests, checkout, or any other purpose.

(1) Use wiring harnesses and mating connectors that are approved by the responsible design agency to connect components to testing fixtures for all testing operations.

(2) Use a receiving checkout procedure that has been approved by the responsible design agency for all receiving tests.

(e) Replace protective caps and plugs immediately following completion of tests.

(f) Replace component in the plastic bag. Place an identification tag with acceptance stamp, identification, manufacturer's name, and handling restrictions in a position that permits clear visibility of the information and prevents corrosion interaction.

(g) Reseal plastic bag in a controlled area.

(h) Overpackage the component as necessary to prevent damage during handling, shipping, and storing operations.

(i) Attach identification and warning tags to exterior of package as applicable.

5.6 Stock room storage. During stock room storage, pneumatic system, fuel systems, liguid oxygen systems, hydraulic systems, gas bearing and slosh measuring systems, and electronic components shall be protected as follows:

(a) Store in an approved storage area.

(b) Protect manufacturer's identification, nomenclature, part

number and assembly restriction markings. Observe all package warnings during handling and stacking operations.

(c) Provide for periodic reinspection of components to insure that components are adequately protected, and provide for compliance with the latest applicable protection drawings and specifications.

(d) Warning labels and storage and stacking instructions shall be observed as applicable.

5.7 Physical protection for intraplant transportation. Precautions shall be taken to insure that clean packages or closures are properly identified and protected from damage during handling, and intraplant transportation. Such precautions may include but not be limited to the following devices. (Ref 4):

(a) Durable overpack.

(b) Shock resistant mountings.

(c) Bright colored, well marked containers, labels, or wrapping material for warning purposes.

(d) Specially made or adapted containers, tote boxes, or trays to provide protection and convenience of handling.

(e) Specially built or adapted transportation which will offer suitable protection to the subject item.

(f) Written instructions posted in an obvious position directing special handling, storing, or transportation procedures.

5.8 References.

1. "Cleaning and Cleanliness Verification", C. F. Bild, Contamination Control, Vol. III, No. 3, March 1964.

2. Contamination Control Handbook, Sandia Laboratories, NASA-SP-5076, February 1969.

3. Contamination Control Program Requirements, Vol. 1, MSCM 5322, September 1970.

4. Handbook for Contamination Control on the Apollo Program, NASA, Washington, D. C., August 1966.

5. Procedure for the Determination of Particulate Contamination of Hydraulic Fluids by the Particle Count Method, ARP 598, 1 March 1960.

6. Sizing and Counting Particulate Contaminant in and on Clean Room Garments, ASTM F 51-65T, American Society for Testing and Materials, Philadelphia, Pa.

7. Standards and Guidelines for the Design and Operation of Clean Rooms and Clean Work Stations, T. O. 00-25-203, 31 August 1965.

8. Tests for Nonvolatile Matter in Halogenated Organic Solvents and Their Admixtures, ASTM-D-2109-64, American Society for Testing and Materials, Philadelphia, Pa.

9. Verification of Cleanliness Levels, Milt McKinzie, Presented at the 6th Annual Technical Meeting of the American Association for Contamination Control, 17 May 1967.

THIS PAGE LEFT INTENTIONALLY BLANK

SECTION 6

PACKAGING MATERIALS

6.1 Barrier materials. Materials used in the clean package as barriers to contaminating environments may be categorized in several ways. These materials are grouped herein according to structural type and to package application.

6.1.1 Structural.

6.1.1.1 Rigid. Rigid packaging materials include metals, glass, ceramic, and rigid plastics. These materials are cleanable to the degree required, provide adequate environmental protection, and are minimal contributors of contaminants. They may be used as intimate and environmental packages.

6.1.1.2 Nonrigid or flexible. This group consists principally of metal foil and plastic films. The barrier qualities vary with the different materials. The sloughing of particles due to abrasion and flexing occurs to some degree in all materials of this type, especially in those of lower density. Films in this group may be used as intimate and environmental packages and as intimate cushioning material.

6.1.2 Package application. The three basic elements or parts which compose a complete clean package are intimate cushioning, intimate package, and environmental package (Ref 5).

6.1.2.1 Intimate cushioning. Clean items which have sharp edges, protrusions, or external threaded portions may require some form of cushioning to protect the intimate and environmental package from puncture or damage. The material used for this part of the package requires the same degree of cleanliness as the item because of its intimate contact with the item. Where a plastic film is used as the intimate package, the same material is commonly used for cushioning. This is accomplished by placing a number of layers over the sharp edges or protrusions.

6.1.2.2 Intimate package. The intimate package, applied in the clean room, is the packaging material in contact with the clean item or environmentally adjacent to the clean item. Its function is to provide a contamination barrier. The material used for this part of the package requires the same degree of cleanliness as the clean item and should be

capable of providing a hermetic seal to external contaminants and environments. The rigid materials of high density and hard finish can provide the highest degree of cleanliness and effective barrier qualities. Some impediments to the use of rigid materials may be in forming to a particular configuration, sealing, and securing the item within the enclosure to prevent damage to the item and container and still maintain the required cleanliness. Nonrigid or flexible materials are limited in the degree of cleanliness they can maintain due to their sloughing characteristics. Metal foils are cleanable to a good degree but should not be used since flexing and abrasion create considerable particle generation. Plastic films of high density and smooth surface finish are readily cleanable, and they generate fewer particles than the low-density films (Ref 3). Many of the plastic films are heat-sealable and are effective barriers to certain environments.

6.1.2.3 Environmental package. This part of the clean package is used to provide an additional barrier to specific environments which may not be provided by the intimate package material and to provide the intimate package with protection from the various environments encountered during handling operations and storage. The sloughing characteristics of the flexible film material used for this package may be of less significance, and emphasis can be placed on those characteristics that provide the best environmental barrier. Many of the plastic films are effective barriers to moisture vapor, oils, greases, other gases and liquids, and are heat-sealable. The rigid materials possess all the barrier qualitites of the films and, in addition, provide greater physical protection from forces both within and outside the container (Ref 5).

6.2 Ancillary materials and accessories. In addition to the basic materials for closures, enclosures, and cushioning of a clean package, certain other materials are necessary to form a complete clean package. Most of these items and materials will be used in the clean packaging operation either internal to the package or adjacent thereto. Therefore, the cleanliness of the items and the handling procedures must be compatible with the cleanliness level of the clean packaging operation. The following items are commonly used in clean packaging operation. However, special situations may require additional items which should be given the same considerations for cleanliness.

6.2.1 Tape, pressure-sensitive. Pressure-sensitive tape (PPP-T-66) may be used in some instances for securing cushioning to the item, sealing closures or wraps, and securing other items to the package. The tape material and the adhesive should not generate contaminants or degrade the package material.

6.2.2 Ribbons and ties (nonadhesive). Ribbons and ties may

sometimes be used for the same purposes as pressure-sensitive tape and may be preferred to eliminate the possibility of contamination from the adhesive. Material used for these ties and ribbons should be cleanable and nonshedding to the degree required.

6.2.3 Identification labels and tags. Identification labels and tags are normally required for proper and complete identification of the clean package and item contained therein. They should be preprinted to preclude the need for marking materials in the clean packaging area. Labels, tags and markings should be on materials which are nonfading and minimal in generation of contaminants and in accordance with MIL-STD-129.

6.2.4 Desiccants and humidity indicators. When static dehumidification is required in the clean package, desiccants (MIL-D-3464) may be applied in accordance with MIL-P-116 to ensure that the clean item is not contaminated by desiccant dust or the desiccant bag material. Desiccants contained in bags which are noncorrosive and impermeable to desiccant dust are available. Humidity indicating devices may be placed in the package (MIL-STD-2003) or externally mounted (MIL-I-26860).

6.2.5 Purging gases. Inert gases such as dry nitrogen used for purging the clean package prior to sealing the closure shall be of a purity equal to or better than the cleanliness level of the item. The impurities to be considered include water vapor, hydrocarbons, and particles that would contaminate the clean item. Filtration of the gas shall be adequate to ensure removal of all contaminating particulates.

6.2.6 Integrity seals. Tamperproof-type seals or decals may be used to detect violation of the integrity of a sealed clean package or closure. These items shall be of such material and configuration that their application does not result in deterioration or violation of the closure.

6.2.7 Intermediate package materials. Items of a fragile nature should be provided physical protection after being clean packaged and prior to extensive handling. Materials used for this purpose include cushioning, compartmentalized containers, environmental barrier covers or wraps. Materials of this type should be applied outside the clean packaging area.

6.3 Evaluation of barrier materials. Precision cleaned films are available which can meet the cleanliness requirements for most clean packaging applications. The levels of cleanliness as specified by the supplier of such films should be checked to assure conformance with the requirements of the specific application. At the present, there are only four types of plastic films considered suitable for use

in the clean room; polyethylene, polyamide, fluorohalocarbon, and FEP Teflon. Some of the forms of these films are described in the following section along with other material which have been used for precision packaging. Characteristics and properties of selected plastic films are shown in Tables IV and V.

6.3.1 Color-coding. The concept of color-coding films used for clean packaging has become popular, since it prevents confusion between film types. Printing is not permitted since ink tends to slough off, therefore a homogeneous color is imparted to the resin mix prior to extrusion. Although there are no hard and fast rules, the generally accepted colors are: (Ref 4).

(a) Polyethylene - Pink for antistatic types.

(b) Nylon - Bright orange, or yellowish tint for antistatic types.

(c) Aclar - No color, tint, printing, or destaticizing agent is allowable with Aclar films, since any additive would be a non-fluorocarbon and therefore not LOX-compatible under NASA's impact test, per MSFC-SPEC-106A.

6.3.2 Polyethylene. Polyethylene is widely used because it is available very economically in many types, sizes, and thicknesses. The strength of polyethylene is less than that of practically all other plastic films and its tendency to slough is very high. Polyethylene also showed considerable distortion due to swelling in an oil-resistance test. As a result, Dr. J. Mason Pilcher of Battelle Memorial Institute recommended that polyethylene should not be used alone to package components requiring a high degree of cleanliness (such as Levels I and II) (Ref 7). However, it may be used as an outer wrap over a suitable intimate wrap.

6.3.2.1 Polyethylene, ordinary clean. Polyethylene, ordinary clean is a low to medium density polyethylene film without talc or starch slip agents. It is a natural color, available in thicknesses from 0.002 to 0.010 inches.

6.3.2.2 Polyethylene, antistatic clean. Polyethylene, antistatic clean is a pink nonfluorescent polyethylene film, containing an internal organic antistatic additive throughout the film which renders all surfaces sufficiently conductive to bleed off static charges and eliminates particle attraction or spark-discharge hazard due to static electricity (NADC Study).

Table IV.

Characteristics of clean packaging films

Material and Color	Application	Sealability	Forms Avaliable	Applicable Specifications
POLYETHYLENE, Ordinary, Clean Clear	Environmental package over intimate packages made of more expensive materials such as nylon or Aclar, to provide outer cushioning and supply missing moisture barrier over nylon bags; to be used as intimate package only in cases where cleanliness levels are not critical. Where heavy objects are to be wrapped, multiple layers of 6-mil polyethylene are to be preferred over one layer of a greater mil thickness.	Broad melting range; sealable with hot-bar constant heat and thermal impulse sealers, and ultrasonic means	Flat roll stock Seamless tubing Edge-sealed tubing Bags	LP-378 KSC-C-123(D)
POLYETHYLENE, Antistatic,Clean Pink	Besides use in place of POLYETHYLENE, Ordinary, Clean, the antistatic type should be used in packaging electro-explosive devices such as squibs & actuators, and around electronic devices and components such as field effect transistors and other devices which are capable of being rendered inoperative by static discharge. Clean room curtains, covers & drapes as well as outer bags and wraps for clean intimate bags may be made of antistatic film to minimize attraction of airborne particulate matter. High slip of destaticized surface makes bags easy to open with clean room gloves.	See POLYETHYLENE, Ordinary, Clean	Flat roll stock Seamless tubing Edge-sealed tubing Bags	LP-378 KSC-C-123(D) (specify pink color and anti-static type)

Table IV. (Continued)

Material and Color	Application	Sealability	Forms Available	Applicable Specifications
POLYETHYLENE, Daylight Fluorescent, Clean Fluorescent Pink	See POLYETHYLENE, Ordinary, Clean; also as a tracer technique for identifying particles sloughed from the film surface as opposed to those from other sources.	See POLYETHYLENE, Ordinary, Clean	Flat roll stock Seamless tubing Bags	LP-378 KSC-C-123(D) (specify DF)
NYLON, Ordinary, Clean Clear	Intimate package and cushioning in critical clean packages, including bearings, precision clean parts, and all items requiring the ultimate in particulate cleanliness. Nylon bags may be steam-sterilized by not using dry heat, unless specially stabilized. (See NYLON, Antistatic, Heat Stable, Clean.)	Melting point about 425 degrees Fahrenheit; requires use of thermal impulse sealers, or RF or ultrasonic means	Flat roll stock Seamless tubing Edge-sealed tubing Bags	KSC-C-123(D) MSC-C-12A
NYLON, Antistatic, Clean, Heat Stabilized Fluorescent Orange	Dry heat sterilization of clean components without the necessity of removing them from the sealed bag. Antistatic drapes and covers requiring higher temperature resistance, lower flamability, high clarity, and greater toughness than that offered by antistatic polyethylene. Intimate bags where particle attraction must be minimized. See NYLON, Ordinary, Clean. See POLYETHYLENE, Antistatic, Clean.	See NYLON, Ordinary, Clean	Flat roll stock Edge-sealed tubing Bags Large seamed shapes	KSC-C-123(D) MSC-C-12A

Table IV. (Continued)

Material and Color	Application	Sealibility	Forms Available	Applicable Specifications
NYLON, Daylight Fluorescent, Clean Fluorescent Yellow-green	See NYLON, Ordinary, Clean; also used as a tracer technique for identifying sloughed particles.	See NYLON, Ordinary, Clean	Flat roll stock Bags	KSC-C-123(D) MSC-C-12A
ACLAR, Clean[1] Clear	Intimate package and cushioning in contact with clean parts destined for LOX or GOX service or which will contac nitrogen tetroxide or similar violent oxidizers, where particles sloughed from other films and foils can constitute an explosion or ignition hazard under impact. Of all plastics, only fluorocarbons (and not all of them) are LOX-compatible. Fluorocarbon films are highly resistant to moisture vapor.	Melting point 350°F to 390°F; needs thermal impulse, RF or ultrasonic sealing; hot-bar and rotary band seals sometimes used; Aclar seals are somewhat brittle and tend to zipper, may be reinforced on outside by pressure-sensitive tape.	Flat roll stock Edge-sealed tubing Bags (Sealed on all edges, never folded due to brittleness)	KSC-C-123(D) MSC-C-12A MSFC-SPEC-456 MSFC-SPEC-164 LP-001174 (GSA-FSS)

[1]Aclar is Allied Chemical Corporation's registered trade mark for its fluorohalocarbon films.

Table V.

Characteristics and properties of selected plastic films

Film Type	Thicknesses Commonly Used in Clean Room	Tensile Strength (psi) (1) D882-61T	(2) WVTR (1) E-96-635(F)	Permeability (3) Gases (1) D1434-63 CO_2	H_2	N_2	O_2
Polyethylene (Low to Med Density)	6-mil	1500-3500	0.7-1.5	2700	-	180	500
Polyethylene (High Density)	6-mil	2400-6100	0.3	580	-	42	185
Polyamide							
Nylon 6	2-mil	9000-18000	5.4-20 @ 38°C	45	250	6	25
Nylon 6,6	2-mil	9000-12000	3-6	9.1	-	0.35	5
Fluorohalocarbon	2-mil, 5-mil	2500-3000	0.4	1670	2200	320	750
Polyester	-	20000-40000	1.7-1.8	16	100	1	6

NOTES: (1) ASTM test method numbers, values given are the average or approximate that may be expected of that type film. Actual values of a specific film will vary between suppliers and between different lots from the same supplier.

(2) Water-vapor-transmission-rate - gm/100 in.^{2}/24 hr/mil/@ 25°C.

(3) Gas permeability - cc/100 in.^{2}/mil/24 hr/atmos/@ 25°C.

Table V. (Continued)

Film Type	(4) Resistance to				Flammability (1) D1433-58	Precision Cleanable	Heat Seal Temp. Range (°F)	(5) Hazardous Materials Effects
	Grease and Oils (1) D722-45	Acids (1) D543-63T	Heat (°F) (1) D759-48	Abrasion and Sloughing				
Polyethylene (Low to Med Density)	P to G	E	180-220	P	Slow Burning	Yes	250-400	UDMH MMH - None N_2O_4
Polyethylene (High Density)	G to E	E	250	G	Slow Burning	-	275-400	Not for LOX-GOX
Polyamide								
Nylon 6	E	P	200-400	E	Self-extinguish	Yes	380-450	UDMH MMH - None N_2O_4 - dissolved
Nylon 6,6	E	P	-	-		-	-	Not for LOX-GOX
Fluorohalocarbon	E	E	400-525	G	Non-flammable	Yes		UDMH MMH - None N_2O_4 Not for LOX-GOX
Polyester	E	G	480	E	-	-	-	-

NOTES: (4) Rating code as related to other types of film E-Excellent, G-Good, P-Poor

(5) Hypergolic propellants; UDMH-Unsymmetrical Dimethylhydrazine; MMH-Monomethylhydrazine; N_2O_4-Nitrogen tetroxide; LOX-Liquid Oxygen; GOX-Gaseous Oxygen

6.3.2.3 Polyethylene, daylight fluorescent, clean. This is a bright fluorescent pink polythylene film, 6-mils thick, containing a pigment which fluoresces orange under black light. This property aids in identifying those particles sloughed from the film surface of a bag or wrap as opposed to those from other sources.

6.3.3 Polyamide, nylon 6. When LOX or similar violent oxidizers are not involved, the preferred film material is nylon 6. Nylon 6 films work well as intimate barriers since these films have the highest abrasion and slough resistance and therefore create the least self-contamination problems among films in common use. However, nylon is a poor moisture barrier. Since nylons are plasticized by moisture vapor and tend to equilibrate with the humidity of the surrounding air, moisture as a vapor passes readily through nylon. For this reason it is well to provide a barrier of polyethylene, Aclar[1], or some material with a low WVTR as an outer wrap over a nylon inner bag where moisture vapor protection is needed. For heavy products, or where low moisture vapor is required, 1/2 mil nylon or mylar is coated with 2-mils of polyethylene. In this combination the nylon provides the strength to keep the polyethylene from stretching and breaking.

Being a poor moisture barrier can become an advantage when thin gauge nylon 6 is used to package a desiccant to prevent corrosion of parts without permitting desiccant particles to escape. This assumes, of course, that the desicant package is placed with the clean part inside another package that is a good moisture barrier. (Ref 6).

6.3.3.1 Nylon, ordinary, clean. Nylon, ordinary, clean is a nylon 6 (or blends of nylon 6 and nylon 6.6) polyamide film, natural color, 2-mil thickness, without talc or starch slip agents.

6.3.3.2 Nylon, antistatic, clean, heat stabilized. This is an orange fluorescent transparent nylon film, 2-mils thick, containing an organic antistatic agent throughout the film to reduce static charging, plus a heat stabilizer enabling the film to withstand dry heat sterilization cycles of 300 degrees Fahrenheit for 12-hour periods and up without marked degradation. Ordinary nylon browns and embrittles in short periods under this temperature. (Ref 2).

6.3.3.3 Nylon, daylight fluorescent, clean. This is a yellow-green fluorescent nylon film, 2-mils thick, containing a pigment which fluoresces blue-white under black light. This fluorescence aids in identifying these particles sloughed from the intimate package surface as opposed to those from other sources.

---

[1]Aclar is the registered trademark of Allied Chemical Corporation for its fluorohalocarbon films.

6.3.4 Fluorohalocarbon (Aclar). The outstanding properties of fluorohalocarbon films are a very low water-vapor transmission rate, low gas transmission rates, and excellent thermoforming characteristics. In addition, fluorohalocarbon films are chemically inert, completely nonflammable, and LOX compatible. Techniques supplied by the manufacturer enable a converter to bond fluorohalocarbon films to such substrates as polyethylene, polyester, and foil. (Ref 1).

Aclar, clean, is a fluorohalocarbon copolymer, unplasticized and without additives. It is clean and colorless, supplied as a clear, transparent product in thicknesses of 1/2-mil and up, and is available in three grades: Aclar 22A, 22C, and 33C. All grades are certified LOX-compatible under MSFC-SPEC-106A, but Aclar 33C is preferred for packaging parts designed for LOX service due to its superior resistance to cleaning solvents. Teflon and the Aclars are the only films meeting the requirements of MSFC-SPEC-456 for packaging all pneumatic components requiring LOX-compatibility, and as a result, Aclar bags are being specified by NASA for clean packaging of LOX-clean hardware. Aclar is also compatible with nitrogen tetroxide, hydrogen peroxide and other violent oxidizers. Chlorine trifluoride sprays do not cause Aclar to ignite. Since Aclar is available in varying thicknesses, it offers LOX-safe wraps for covering small valve orifices, can be thermoformed into plugs or caps to protect these fittings,and large single sheets can be used to cover flat-flanged surfaces up to 54 inches wide. (Ref 6).

6.3.5 Polyester. Polyester film is one of the strongest biaxially oriented films commercially available. It has exceptional tensile strength over a wide temperature range and is only slightly affected by oil. The film has good chemical resistance, usually contains no plasticizers, and has good transparency. Cost is rather high, being three times as much as some other transparent films, but its unusual strength makes it a very useful packaging material, and the cost is offset somewhat by its strength, which allows its use in thinner gauges than other films. It has a moderate WVTR, but this drops to near zero at freezing temperatures. Laminations make use of its great strength and good barrier properties.

A major disadvantage of polyester is the fact that the uncoated film is not heat-sealable. However, a very small amount of benzyl alcohol applied with a felt wick in combination with heat and pressure makes an excellent seal. Temperatures should be in the range of 335 to 385 degrees Fahrenheit. Unsupported polyester is rarely used for precision packaging.

6.3.6 Aluminum foil. Although aluminum foil is not a plastic film, it is sometimes considered for use with the plastic films for

clean packaging applications. Household grade aluminum foil has an oil film on the surface that renders it not LOX-compatible. Clean oil-free foils are available which can pass the LOX-impact test as a sheet sample, but the high rate of particle sloughing from abrasion and flexing produces aluminum particles which are not LOX-compatible, owing to their large specific surface areas. Table VI shows the results of slough tests for four materials including two aluminum foils. (Ref 9). Aluminum in contact with dissimilar metals may cause galvanic corrosion.

Other disadvantages of aluminum foil are that it is not heat-sealable, it is opaque, the surface oxides may be abrasive to precision finishes, and contact with dissimilar metals can contribute to corrosion.

Due to its opacity and sloughing characteristics, the disadvantages of aluminum foil are felt to outweigh any advantages for its use in the clean room.

6.3.7. Vinylidine chloride copolymer (saran). Saran film offers excellent water-vapor and gas-barrier properties but its resistance to abrasion and sloughing is poor. These disadvantages and the fact that it cannot be cleaned limits its use in the clean room.

6.3.8 Composite films. The structuring of two or more different types of films to form a composite film has the advantage of combining in one film the characteristics of two or more individual films to provide the needs for a particular application. Two methods of structuring are utilized for composite films: mechanical lamination and the extrusion formed composites.

Mechanical lamination consists of sandwiching together the different types of films with special adhesives, by thermal lamination, or extrusion coating one film on another.

The extruded composite films are two or more films produced simultaneously, and formed into a miltilayer structure while still in amorphous and semimolten states during the manufacturing process.

6.3.8.1 Aclar/polyethylene/mylar/polyethylene. This is a laminate which meets the requirements of MIL-B-22191, Type I. The Aclar is a 3/4-mil ply and serves as the least expensive effective water-vapor barrier of a reasonable thickness among transparent films. A polyester/polyethylene combination meeting the requirements of MIL-B-22191, Type II seals effectively and resists grease and plasticizers. The strength of this composite is high and it is thin and exceptionally transparent. Because bags of these laminations would be literally lined with polyethylene, they are recommended only as outer moisture-barrier wraps over intimate bags of nylon.

Table VI.

Slough tests of four intimate wraps*
Average counts for one square foot

	Particle Size				
Material	10-25μ	25-50μ	50-100μ	100μ	Fibers
Saran Wrap	32	25	4	4	5
Al (Alcoa)	938	265	60	15	5
Al (Kaiser)	1,003	311	59	11	3
Steel	23,880	8,600	290	50	15

*Particles were generated by carefully flexing the foil and roughing and smoothing it. (See Ref 9 for more details).

6.4 Antistatic films. All materials, conductive or not, except for pure gases, can produce static provided they are not grounded. Therefore, the need is for a packaging material capable of being grounded so that any static charge present may be swiftly drained off from the entire film surface, rendering it neutral and, as a result, incapable of causing a spark to be generated upon it, since charges are bled off in the very instant of creation. (Ref 8).

Only the surface of a film or other object need be rendered conductive for total bleed-off of a static charge to be made possible by a grounding touch or connection.

A static charge, once generated, can be drained off in only two ways:

(a) Directly to ground through or along the surface of the material itself if it is sufficiently surface-conductive.

(b) Through the air surrounding the object if that air is made sufficiently conductive by ionization. Ionizing the air is the only means of increasing its conductivity to any practical degree. It may be accomplished by many means but none produces a lasting effect on a film or object which may be recharged by contact immediately after leaving the ionized atmosphere.

Therefore, it is necessary to build "groundability" into the packaging films themselves, so that the safety feature goes with the film throughout its life wherever it is used including low relative humidity conditions. Some of the most effective approaches to this goal are discussed in the following paragraphs.

6.4.1 Effective techniques of production.

6.4.1.1 Internal organic antistatic agents. Such organic antistats as quaternary amines and similar agents may be introduced to plastic resin blends prior to extrusion, effectively and permanently destaticizing the extruded product.

The mechanism of static bleed-off on a film containing internal organic antistatic agents is based on the attraction of humidity to the surface of the film where it combines with the antistatic agent to form the microscopic conductive layer necessary to drain off any charge. Should this layer be abraded away, it reforms at once, so that the material retains antistatic properties throughout its life.

6.4.1.2 Impregnation of films with conductive granules. It is impossible in the extrusion of polyethylene and similar thermoplastics to incorporate in the resin mix finely divided conductive pigments or granules which render the film conductive if a sufficiently high percentage of such additive is present. By means of total conductivity, such films assure that surface abrasion does not create electrical gaps.

6.4.2 Static detection and measurement. Several test methods have been developed for the measurement of the presence of a static charge on the surface of a film or laminate. One such test charges a sample of film with 5000 volts, either positive or negative (usually both in succession) and grounds the specimen. The time required to charge and the speed of the bleed-off of the charge upon grounding is graphed by a recording electrometer.

Since bleed-off time for ordinary or nonconductive films is well above 5 minutes (the point at which testing is usually abandoned), any films with bleed-off times less than 2 seconds appear to qualify as static-dissipating. It is unlikely that a charge could be found remaining on an antistatic film touched or grounded for a time of the order of 2 seconds, or even that a grounding connection could be made or a package opened completely and its contents removed in less than 2 seconds. While an operator touches a film and a ground connection exists, no further charge can be generated if the film is surface conductive.

Direct quantitative measurement of static charges on the surfaces of materials without direct contact is made possible by static meters. These instruments are held at a distance from 1 to 12 inches from a charged surface and indicate the polarity and degree of the charge in kilovolts. Such devices furnish actual readings of static charges, and are far more useful in determining the antistatic behavior of films under conditions of actual use than are such methods as surface resistivity or conductivity tests. The surface conductivity of a film need only be minimal for good bleed-off of static charges to occur, since static charges are practically pure voltage with only infinitesimal amperage. The best test, therefore, would seem to be one which places the film in a configuration similar to that which it will assume in actual use, grounds it, and attempts by whatever means to generate a retained static charge upon it.

6.5 Film cleanliness. The essence of clean packaging is that a contamination sensitive item must always be protected from contamination influences. The clean room may provide this protection during assembly and testing, but the package must succeed the function of the clean room. As a result, it is necessary to think of a clean packaged item as

an inseparable unit within this concept. If the intimate package shows damage or violation, it must be assumed that the part is contaminated and cannot be used without recleaning or reverification of cleanliness.

To maintain the cleanliness level required for an item, the packaging material selected must be cleaned to such a level that when applied in accordance with proper clean room procedures, it will not contaminate the cleaned item beyond an acceptable level.

MSC-SPEC-C-25 requires that all bags, sheeting tubing, roll stock, and other cleaned film shall be overwrapped with a second bag of clean, 4 to 6 mil, antistatic polyethyline. Roll stock shall be wound on clean cores made from non-dusting plastic or metal. Closures and seals shall be overwrapped and sealed in film cleaned to Level 3 of that specification.

6.5.1 Cleanliness level measurement. Standard procedures are needed to measure particle concentration in order to determine if the packaging material is clean before use and to measure the extent to which it sloughs during use. Several procedures have been devised by various investigators for quality control and for research on abrasion resistance, but none can be considered a truly standard method (Ref. 10).

6.5.1.1 Membrane filter test. One of the most generally accepted methods of measuring particle contamination is by the membrane filter test. The entire significant surface areas of the "clean" films are bathed with a known volume of pretested solvent. The solvent, containing the particles, is then poured through a membrane filter and the collected particles are then counted and sized with a light microscope or with automatic instruments.

6.5.1.1.1 Direct visual examination. Although this method is simple to understand and allows a direct visual examination of the particles of interest, it has several shortcomings. Specifically, with the microscope considerable time is required to count a filter sample and the counts are subjective in nature and highly dependent on operator performance.

6.5.1.1.2 Automatic particle counter. Particles in rinse solutions may also be counted and sized with automatic instruments. Although procedures utilizing automatic particle counters are not as widely accepted or as standardized as microscopic procedures, automatic counters, in general, give results which are relatively more accurate and reproducible than microscope counts and which may be obtained in considerably less time. There are currently a number of automatic particle counters commercially available for which results have been compared with those obtained with a microscope on identical samples.

6.5.1.2 Ultraviolet identification. R. E. Bolasny of Scientific Enterprises, Inc., devised a method to positively differentiate particles caused by sloughing film from particles from other sources. A fluorescent dye is added to the resin before it is formed into Daylight Fluorescent Packaging Materials,* known as DF films. The additive in DF polyethylene provides for red daylight and orange ultraviolet identification, and the additive in nylon provides for yellow daylight and blue-white ultraviolet identification. The particles found in the package are then examined under high intensity ultraviolet light. This easily allows for positive identification of those particles sloughed from the packaging material itself as opposed to those from other sources.

6.5.2 Film cleaning techniques.

6.5.2.1 Facilities. Cleaning film on a large scale requires rather elaborate, mechanized cleaning equipment and a clean room in which further packaging of the clean film is accomplished. Under no circumstances can the clean film be exposed to ambient factory environmental conditions after it leaves the cleaning equipment. Therefore, the cleaning equipment must be located in the clean room, which in most cases is not advisable, or the clean film must issue directly from the cleaning equipment into the clean room through an appropriately protected pass-through. The type of installation described above would be economically feasible only for the very large user or commercial converter of clean film (Ref. 4).

6.5.2.2 Techniques. Although not an easy operation several techniques exist for attaining the low particle counts and non-volatile residue levels required by today's precision clean packaging.

Resins must be selected and extruded into the form of film, either as flat sheeting or as hollow "tubing." When such tubing is extruded using dry nitrogen fed through a 0.3 micron filter to form an invisible mandrel inside the "bubble" of tubing being blown, subsequent cleaning of the inside of the tube is both unnecessary and self-defeating. The inside of such film is formed from molten plastic inside a closed system, is unexposed to outside conditions and is therefore cleaner than it could be if cleaning were attempted later.

The outside of such tubing must be cleaned, however, and because certain plastics including Aclar are never extruded in tube form, methods had to be devised for cleaning flat roll stock sheeting as well.

---

* Patented by Scientific Enterprises.

Since non-volatile residues such as oil, grease, prespiration and similar substances may be present on sheeting and only occasionally show up in sampling, all film cleaning must employ solvents to assure the capability of removing NVR. To operate without solvents is to run the risk of allowing grease or oil to get through the cleaning system undetected, and to offer a very real explosive hazard in contact with LOX or even gaseous oxygen under pressure.

One technique currently used employs trichlorotrifluoroethene (MSFC-SPEC-237A) in the form of bath and, later, as a high pressure spray in a cleaning machine. The sheet or tubing is passed down into the bath to soak briefly, then emerges to be sprayed with fresh solvent. From the sprays it passes through 0.3 micron filtered dry air into the area where it is wound on dustless clean plastic cores.

Other methods may be used in addition to, but never as a substitute for, solvent cleaning. These include brushing, wiping, and vacuuming with or without electrostatic assistance from ionization devices.

6.6 References.

1. Aclar, Technical Publication, Allied Chemical Company, New Jersey.

2. "Antistatic and Precision Clean Packaging Materials and Methods," Dan C. Anderson, The Richmond Corporation, presented at the 5th Annual Contamination Control Symposium, 1969.

3. "Clean Packaging," J. M. Pilcher, N. G. Foss, and C. W. Cooper, Contamination Control Journal, April 1965.

4. "Clean Packaging Materials and Methods," Dan C. Anderson, Contamination Control Journal, December 1969.

5. Contamination Control Handbook, Sandia Laboratories, NAS-SP 5076, February 1961.

6. "LOX Compatible Packaging Films," Dan C. Anderson, 1965 Proceedings Fourth Annual Technical Meeting and Exhibit, American Association for Contamination Control, Boston, Massachusetts, 1965.

7. "Packaging Materials and Packing Methods, Pro and Con On," Dr. J. Mason Pilcher, Contamination Control Journal, September 1966.

8. "Static-Dissipating Plastic Films for the Space Age," Dan C. Anderson, The Richmond Corporation, Redlands, California, 1967.

9. Laboratory Analysis of Intimate Wraps, Memorandum R-ME-MMC-96-64, George C. Marshall Space Flight Center, Huntsville, Alabama, 16 July 1964.

10. Scientific Enterprises.

THIS PAGE LEFT INTENTIONALLY BLANK

SECTION 7

PACKAGING AND CLOSURE TECHNIQUES

7.1 Introduction. Many articles that are precision cleaned are packaged individually. Most small items such as valve parts, o-rings and bearings are packaged in envelopes, bags, bottles or other devices that will provide protection from external sources of contamination. However, for many components such as tubes, cylinders, and electronic or electromechanical assemblies, the precision packaging involves the closure or sealing of critical openings or entries. When a contamination sensitive item, such as potted assemblies, or hermetically sealed electronic units, is completely encased while in the clean room, the case may provide complete contamination protection and an intimate package may not be required (Ref. 2). No fixed rules exist for the packaging of precision cleaned materiel because techniques will vary from product to product. One thing that is common to all precision packaging is the need for clean packaging material. The selection of material and the configuration of the precision package will depend upon the nature of the item.

Additional features that may be included in the packaging method are devices that will indicate the contamination sensitivity of the packaged part. Such devices should be positive indicators that will draw attention to the need for proper handling. Devices such as humidity indicators, desiccants, identification tags and labels will be described in this section.

7.2 Intimate cushioning. The function of intimate cushioning in precision packaging is the protection of the intimate package material from excessive abrasion or rupture due to contact with the item. Any protrusion, sharp corner, or externally threaded section should be adequately cushioned.

Where practicable, transparent material should be used as cushioning material when a transparent barrier material is used. If the material must be LOX-compatible, then a fluorohalocarbon film meeting the requirements of MSFC-SPEC-456 is required. If LOX-compatibility is not a requirement, then nylon is usually used. A fluorohalocarbon film, though acceptable for use when LOX-compatibility is not a requirement, is not generally used because of its higher cost.

Because of the quantity of sharp edges involved, male threaded sections present a special problem in precision packaging. When protected with intimate cushioning, they are normally covered with one or more layers of the material. Surface area should be kept to a minimum consistent with the need for completely covering the threads and securing

the material to the item. It appears that the best results are attained when the material is drawn neither too tight nor too loose over the item, but is gently hand-formed over the section. This technique reduces both the material surface area and the amount of movement between the material and the item, but it does not draw the material tight over the sharp edges (Ref. 2).

Cushioning material may be secured to the item in several ways which are described in the next paragraphs. The method used will depend on the following factors:

(a) Item configuration.

(b) Cleanliness requirements of the item's external surfaces.

(c) Amount of handling and transportation anticipated.

7.2.1 Taping the cushioning to the item. Taping and cushioning is most often used on external protrusions which lead to internal surfaces of a component or assembly when the cleanliness requirements are primarily intended for the internal surfaces. Figure 2 illustrates this technique of securing cushioning material to an item.

That portion of the tape in direct contact with the part will probably leave an undesirable residue upon the removal of the cushioning which may require further cleaning. The length of tape used should be sufficient to make an effective bond. If the tape is applied around a protrusion, it should overlap itself by at lease 1/4 of the circumference of the protrusion.

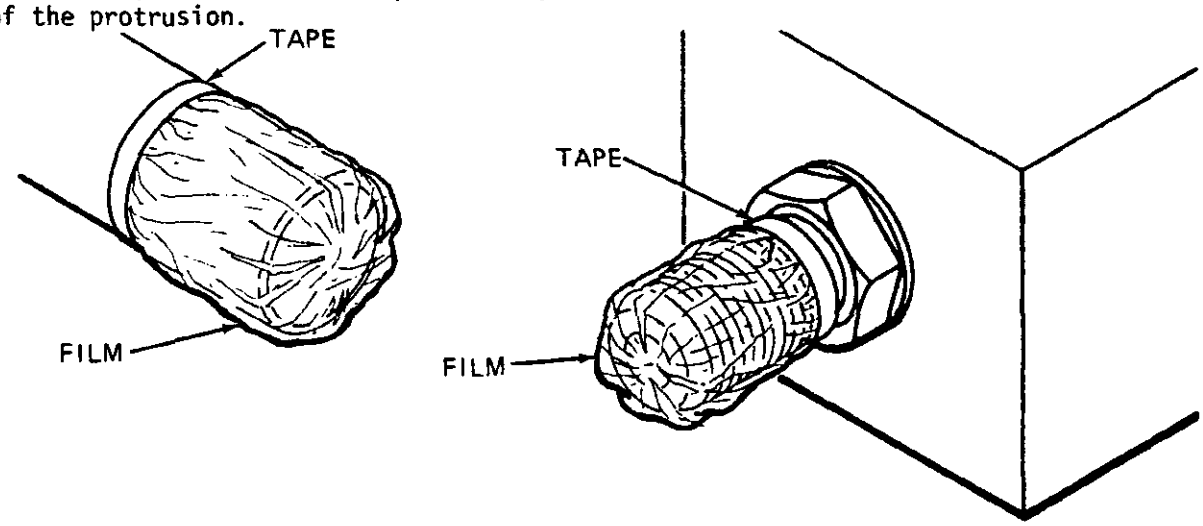

Figure 2. Application of intimate cushioning material by taping to item

7.2.2 Taping only over the cushioning material. This technique is similar to that in 6.2.1, except that the tape does not contact the surface of the item. The cushioning is applied in the same manner, hand-formed over the protrusion, and held in position while the tape is secured. This technique eliminates the problem of adhesive residue on the item.

The cushioning must be of sufficient length to allow space for taping. The tape must be stretched and kept under tension as it is applied in order to provide adequate holding power when the tension is released. In this case, the tape should overlap itself by at least 1/2 the circumference of the protrusion. Figure 3 shows the technique of applying cushioning material by taping only the cushioning.

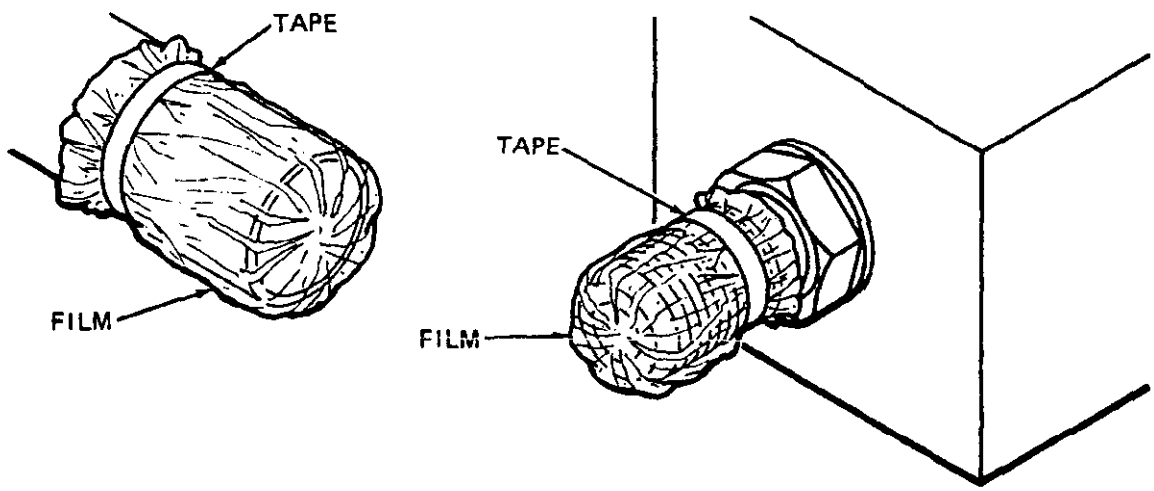

Figure 3. Application of intimate cushioning by taping only over cushioning material

7.2.3 Tying the cushioning to the item. Strips, ribbons, or monofilament cord of clean packaging material may be used to secure the cushioning if tape is not acceptable. This is applied in much the same manner as described in 6.2.2. While this technique offers the advantage of eliminating the tape, it has two distinct disadvantages. First, it presents more opportunity for particle sloughing both from the

increased amount of material and from the tying operation. Secondly, unless the tie is strongly knotted, it may come loose during subsequent handling. Figure 4 shows the technique for tying the cushioning to the item.

7.3 Intimate package. Significant factors in determining the methods and techniques for preparing an effective package are cleanliness requirements, sloughing of the barrier material, and size and configuration of the item. The size of a bag, if used, must be determined in relation to the part. Adequate space within the primary barrier must be allowed in order that the part be easily encapsulated (Ref. 1).

Some typical methods of developing an intimate package are described in the following paragraphs. Variations and combinations of these package forms should be considered to provide the most effective package for any given application. In all packaging operations, the item and the package material must be handled in a manner that will essentially preclude contamination.

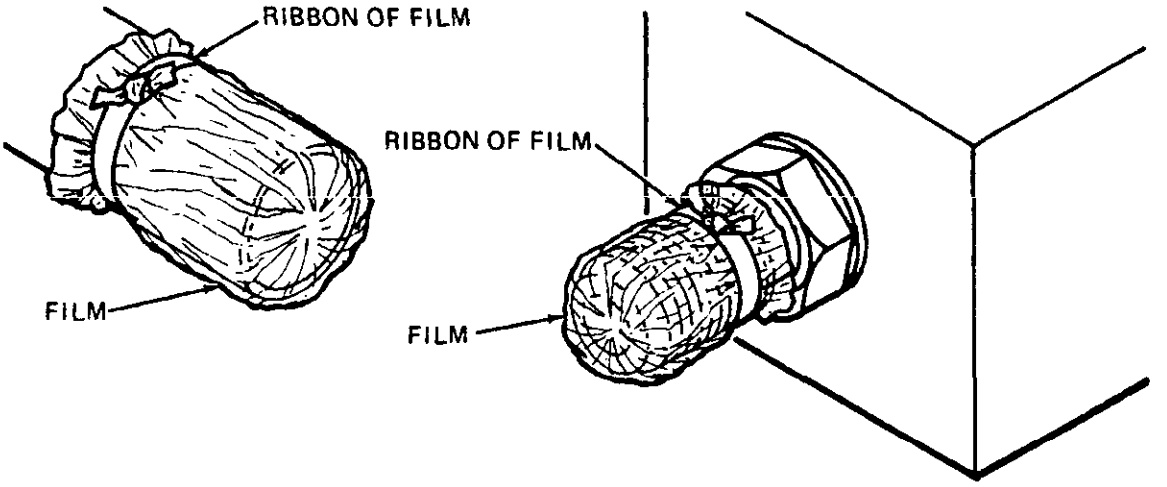

Figure 4. Application of intimate cushioning by tying the cushioning to item

7.3.1 Film package. In this technique, the entire item is enclosed in a plastic film envelope, bag, or tube. For this type package, all surfaces of the item must be cleaned to the same level. Some typical examples of this type of package are shown in Figure 5. In a situation requiring LOX-compatibility, the same material as used for the intimate cushioning should be used as the intimate package. This is necessary even if the intimate cushioning completely surrounds the item since there is always a chance the cushioning could be loosened or torn.

If nylon is used for cushioning when LOX-compatibility is not a requirement, then it should also be used for the intimate package. The sloughing characteristics of polyethylene make it unsuitable for use as an intimate package.

After the film wrap is applied, the package may then be purged, if required, and may also have the air or gas removed, if required.

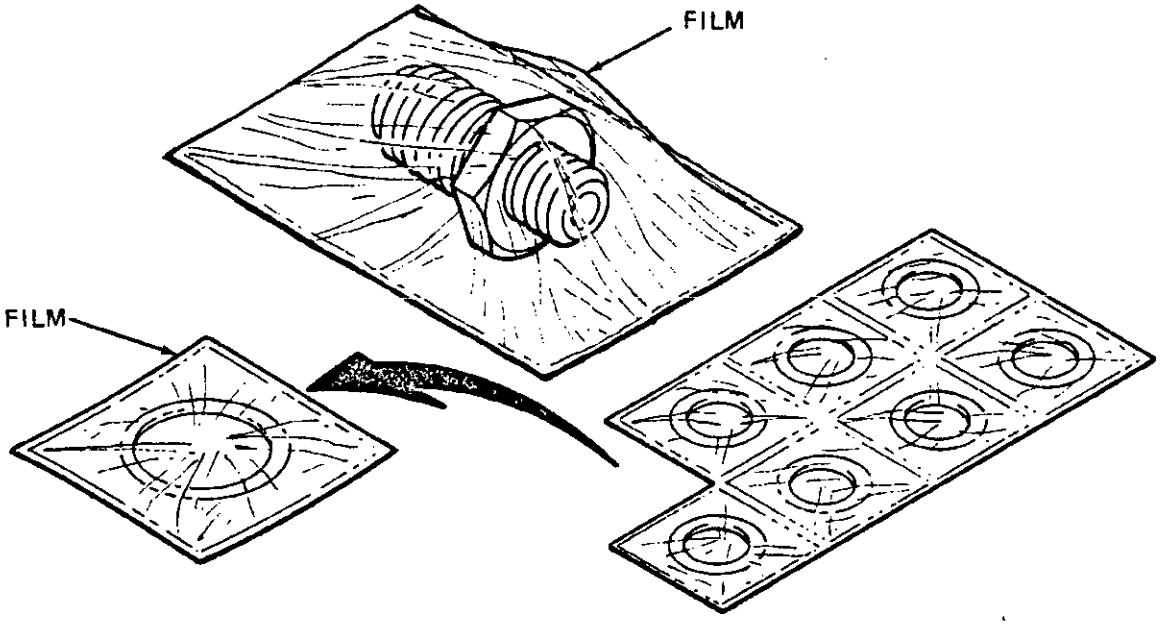

Figure 5. Typical film wraps

7.3.1.1 Purging. Prior to final sealing of the package, the interior of the package and the item may be purged by directing a stream of filtered dry nitrogen (MIL-SPEC-BB-N-411, MSFC-SPEC-234A) or other inert gas into the package at a pressure, volume, and period of time which are adequate to completely replace the original atmosphere of the package with the gas. The package should be sealed immediately after purging to assure a maximum entrapment of the purging medium.

7.3.1.2 Removal of air or gas. The air or purging gas may be removed from a package either by (1) vacuum evacuation or (2) hand expulsion.

Vacuum evacuation, which can be accomplished by withdrawing air or gas from the bag through a hypodermic needle attached to a small vacuum pump accomplishes four things (Ref. 4):

(a) It reduces the contamination caused by abrasion resulting from the part rubbing against the inside of the intimate wrap.

(b) It serves as a test for the integrity of the package and its seals.

(c) It reduces the chance of damage to the bag.

(d) It reduces the moisture content of the package.

To evacuate the bag, insert the vacuum pump tube needle at a corner location of the sealed bag and pull a vacuum until the bag collapses firmly about the enclosed part. Remove the needle and immediately seal the corner of the bag.

Hand expulsion requires dexterity and is accomplished by gently forming the bag around the part with the hands, thereby forcing excess air from the package. In removing air by either technique, care must be exercised to avoid damage to the bag or part.

However, it is not possible for a vacuum to be maintained in a plastic bag for a long period of time since air can pass through the films used in the clean room. If a precision packaged item is to be transported soon after packaging by plane in an unpressurized compartment, bag sealing techniques should assure that the volume of air or gas sealed in the bag is the minimum possible, thus permitting room for expansion of entrapped gas.

7.3.2 Film closure. Using this technique, plastic film is applied to the open connections and ports leading to the cleaned interior surfaces of parts, ducts, and fittings.

Nylon is usually used for film closures when LOX-compatibility is not required. Either nylon or polyethylene may then be used for the environmental package. If a fluorohalocarbon film is used in a LOX-compatible situation as the closure film, then it should also be used as the environmental package in order to provide a second barrier against sloughing particles.

One or more layers of clean film should be placed over the opening and formed around the outside of the part and secured by tape or tie placed over the film and drawn tight. A film tube of adequate size to fit over the opening and extend down the side of the part may be used instead of a film sheet.

Tape conforming to PPP-T-66, Type I, Class B, should be used, unless otherwise specified, to secure the film snugly around the part to effect the seal. The tape should be placed entirely on the film unless its contact with the part is specifically acceptable. It should be noted that a hermetic seal may not be effected and additional environmental wraps should be applied to provide the necessary protection.

The interior of the part may be purged with filtered dry nitrogen or other inert gas prior to sealing of the opening(s). Purging should be performed in a manner to ensure that the inside atmosphere of the part and the closure(s) is completely replaced with the gas. Final sealing of the closure(s) should be performed immediately following the purging. An example of this type of film closure is shown in Figure 6.

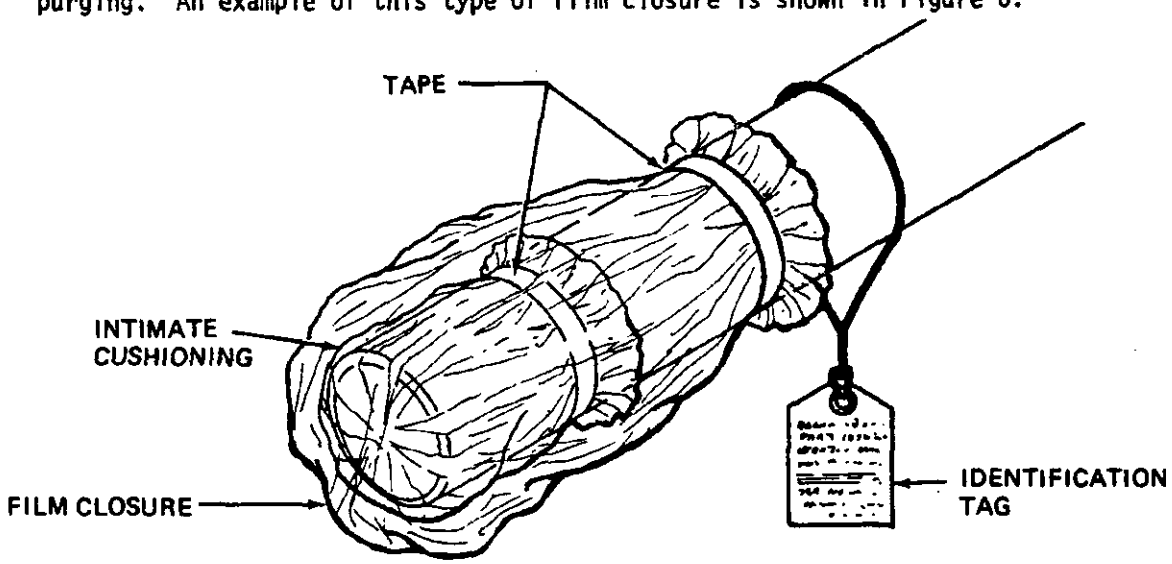

Figure 6. Typical film closure

7.3.2.1 Protective disc or cover. Discs or slip covers made of rigid plastic or similar smooth clean material may be used when the size of openings in parts require some form of protection for the plastic film closure. If the disc or cover will be in direct contact with the part, metals should be carefully selected to preclude the possibility of galvanic corrosion. Table VII shows four groups of metals based on their compatibility with each other as given in MIL-STD-454. By placing a plastic film closure over the opening of a metal part before applying a dissimilar metal disc or cover, galvanic corrosion can be prevented.

The diameter of the disc should be slightly larger than the opening on which it is to be used. With the film closure drawn smooth over the opening, the disc is centered over the opening on top of the film. Tape is placed around the perimeter of the disc, partially on the disc and partially on the film covering the outside of the part, with the tape drawn tight to hold the disc securely in place. In some applications, the disc is placed directly over the opening, the film drawn smooth over the disc, and the tape placed over the film to hold the disc and film in place. A second wrap of tape may be required near the end of the film to provide a better seal and hold the film in place.

When covers are used, they should be of adequate size to slip over the outside diameter of the opening of the part. After drawing the film closure smoothly over the opening, the cover is slipped over the film and part with the head of the cover seated firmly against the end of the opening. The cover flange is sealed to the film with tape placed partially on the flange and film and around the circumference of the closure. In some situations, the cover may be placed directly over the opening with the film closure over the cover in a manner similar to the disc and film closure. When required, purging should be performed as described for the film closure.

Typical closures utilizing discs and covers are shown in Figure 7.

7.3.2.2 Gasket and plate closure. Gasket and closure plates may be used when bolted flange-type connections and openings leading to precision cleaned interior surfaces must be sealed. Clean film or other material compatible with the end use of the item may be used for the gasket. One or more sheets of gasket material may be used to obtain adequate thickness to provide a compression seal to the flange.

The diameter of the gasket and closure plate should be equal to the outside diameter of the flange. The holes of the closure plate should be larger than the flange holes to minimize abrasion and have the same hole pattern as the corresponding holes in the flange.

Table VII.

Groups of compatible metals (MIL-STD-454)

Group I	Group II	Group III	Group IV
Magnesium and Alloys	Aluminum and Alloys	Zinc	Copper and Alloys
Aluminum 5052, 5056, 5356, 6061, 6063	Zinc	Cadmium	Nickel and Alloys
Tin	Cadmium	Steel	Chromium
	Tin	Lead	Stainless Steel
	Stainless Steel	Tin	Gold
	Tin-lead Solder	Stainless Steel	Silver
		Nickel and Alloys	
		Tin-lead Solder	

The closure plate should be a rigid material such as aluminum alloy or stainless steel and of adequate thickness and flatness to assure uniform compression of the gasket on the flange. To prevent galvanic corrosion, metals dissimilar to the item flange shall not come in contact with the flange. Refer to Table VII. If attachment hardware such as bolts and nuts is of a metal dissimilar to that of the flange, bushings and washers of nylon or similar material should be used to prevent galvanic corrosion. The bolts and bushings should fit loosely in the holes to preclude galling or shedding.

Purging the interior of the item with filtered dry nitrogen or other inert gas may be accomplished prior to sealing by directing the gas into another opening in the part and allowing the gas to escape around the gasket, or by allowing space between the plate/gasket and flange and directing the gas into the interior at this point. Purging should be performed in a manner to completely replace the inside atmosphere with the gas.

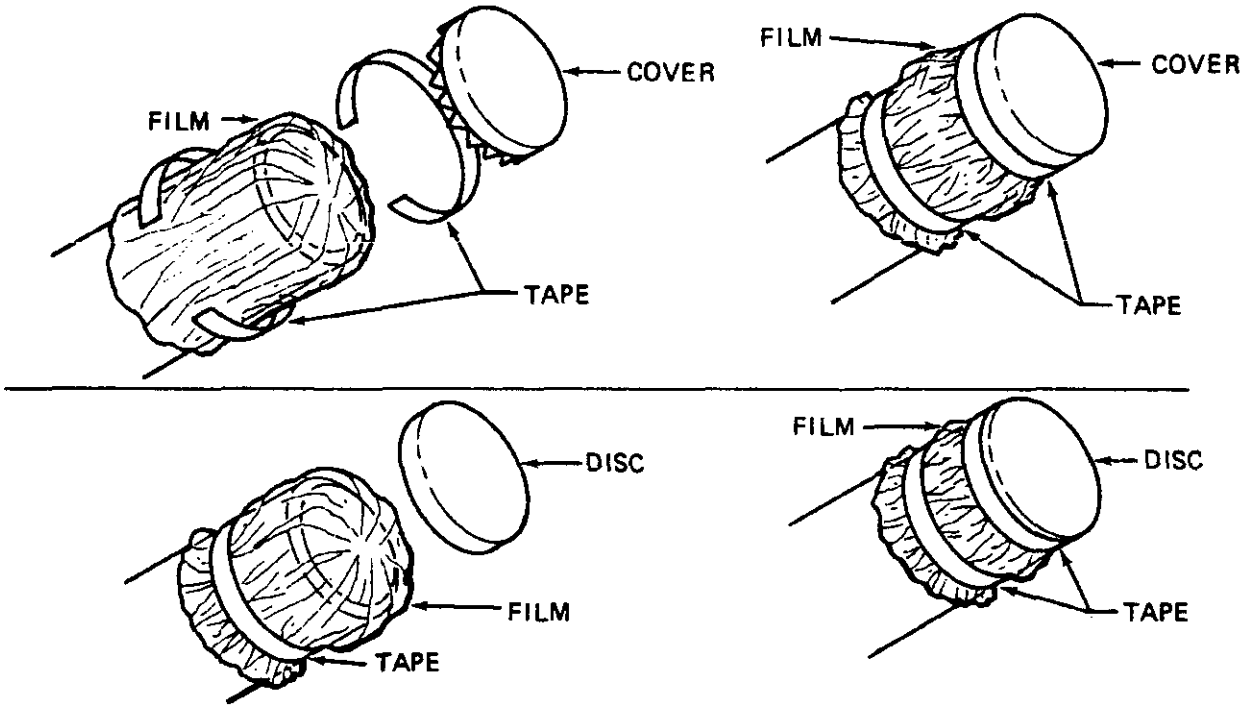

Figure 7. Typical closures utilizing discs and covers

Immediately following purging, the closure should be made with the film gasket over the flange face and the closure plate over the gasket. With holes aligned, attachment hardware is installed and torqued to recommended values for the size and type used. Tape is then placed over the circumference of the plate, gasket, and flange. A typical closure with plate and gasket is shown in Figure 8.

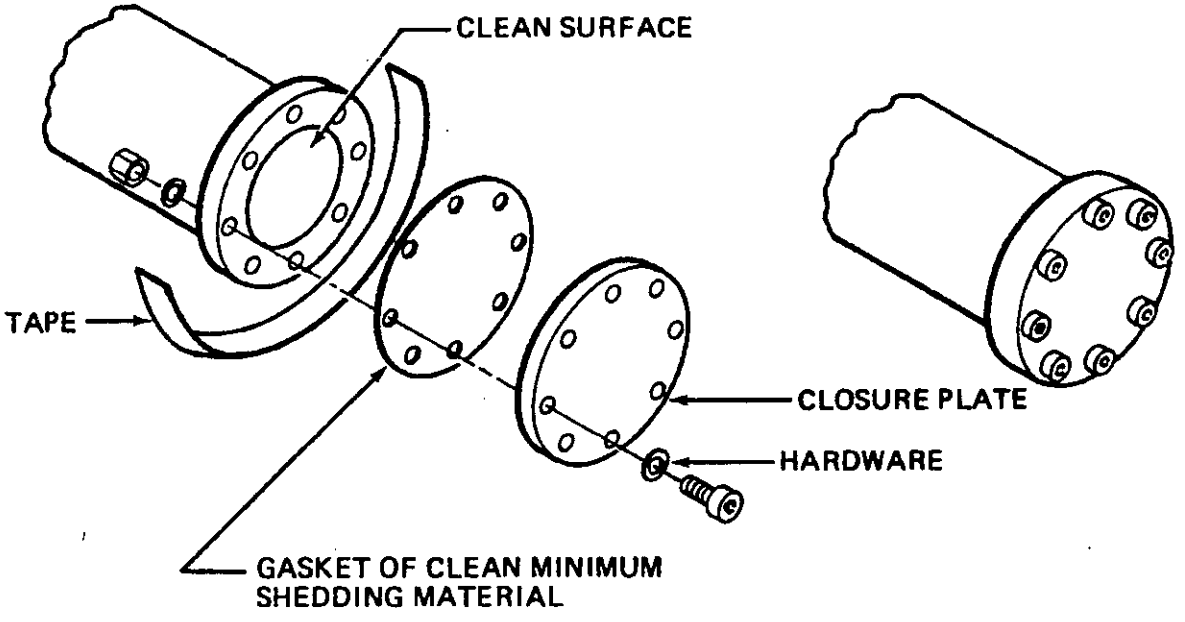

Figure 8. Typical closure with plate and gasket

7.3.2.3 Threaded cap or plug closure. Plastic caps or plugs should never be used on LOX systems. Threaded connections with openings leading to clean interior surfaces may be sealed with a threaded plug for female thread connections or a threaded cap for male thread connections. These closures should be made of a high density acetal copolymer and should be of a suitable size, design and material that will not cause contamination due to abrading, peeling, or excess material caused by poor manufacturing techniques. O-rings or gaskets may be used in conjunction with the caps and plugs for effective sealing. This type of closure has limited application due to the inherent characteristic of particle generation by the connecting and disconnecting of the threaded closures. Use of threaded male plugs is discouraged because of thread sloughing which is not as easily discerned as with threaded caps used on external threads. Careful selection of the closure material and thread profile will aid in minimizing particle generation and preventing galvanic corrosion. When the prescribed closures are not available, two layers of plastic film of the required class shall be applied over the item's opening. The film shall be secured by any means that will not contaminate the item or cause physical damage. Pressure sensitive tape, nylon cord, lockwire, or heat shrinkable plastic sleeving may be used to secure the film.

A clean cap or plug should be carefully mated to the connection by applying a minimum of torque to seat and seal the closure. Excessive torque increases the probability of particle generation in the threads due to galling and shredding of the thread surfaces.

Prior to sealing the closure, the interior of the item may be purged in a manner similar to that described in the previous paragraphs. Typical closures with threaded cap and plug are shown in Figure 9.

7.3.2.4 Rigid packaging. Enclosure of a part or component in a rigid container is frequently used when a device is mated to the package in a manner which enhances its operation in a completed system. The container is usually a specially designed package.

Glass, ceramic, metal, and plastic are materials which are applicable to rigid packaging. The type of the part to be packaged, its configuration, and its materials of construction will determine to a great extent the type of package material that can be used (Ref. 4). The advantages of rigid packaging are:

(a) Reusable containers.

(b) Easily cleanable.

(c) Sloughing of particles is not as great as for flexible films.

(d) Greater physical protection of parts.

(e) Double protection from external contamination can be provided by using an outer polyethylene bag.

Aluminum and stainless steel are materials which have been used successfully to package liquid oxygen impact test cups and pins.

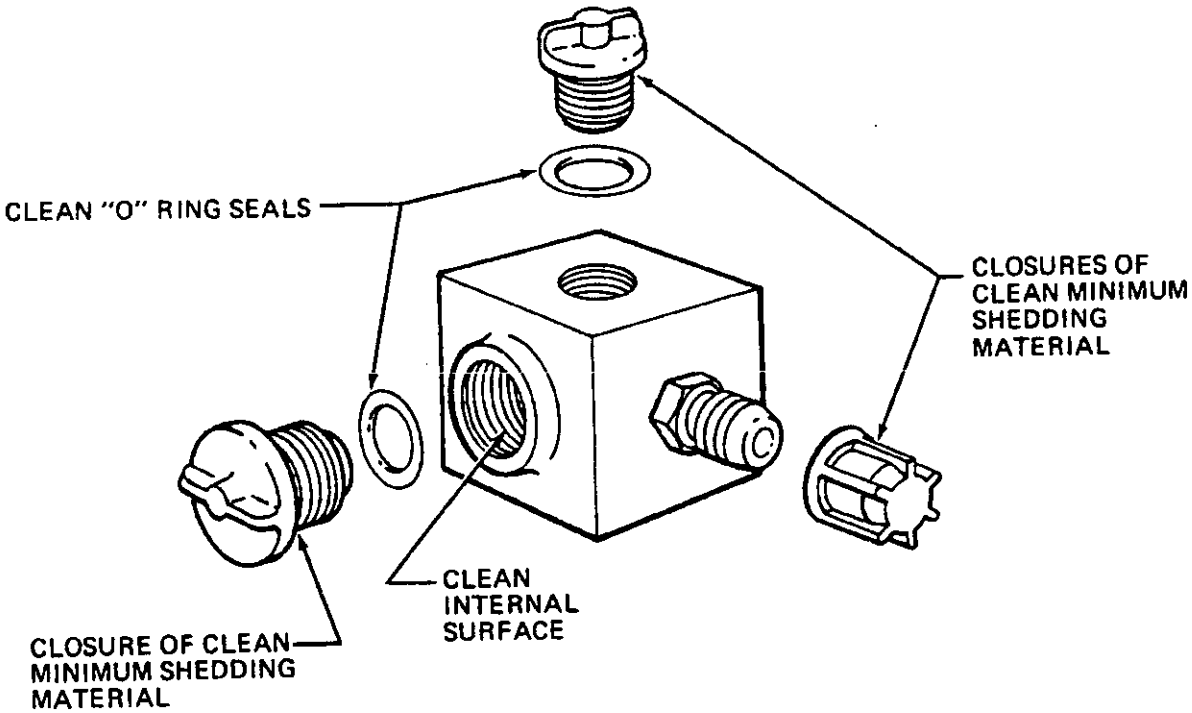

Figure 9. Typical closures with threaded cap and plug

7.4 Environmental package. The selection of the type of material for the environmental package depends on the type and degree of protection needed for its contents. Polyethylene film is often used for this package. However, when a LOX-compatible situation exists, the fluorohalocarbon film used for the intimate package is still preferred for the environmental package. Containers formed of rigid materials may be applicable for this type package and will provide additional physical protection when required.

The techniques involved in applying and sealing the environmental package are essentially the same as for the intimate package (6.3). Film wraps and closures should be formed over the intimate package and sealed in a similar manner but not interfering with or damaging the intimate package. Additional intimate cushioning material may be required around the intimate package in rigid containers. Sealing may be accomplished using adhesive-backed tape over the juncture of the container parts.

Some variations in the application of the environmental package are described in the following paragraphs. The requirements of the individual packaging situation will determine the particular methods.

7.4.1 Desiccant and humidity indicators. Desiccants maintain relative humidity at the desired level. This level must be low enough to prevent condensation of moisture at the minimum temperature anticipated. The total humidity inside any package comes not only from outside, but also includes any moisture in the air when the item was packaged plus that in the component or part. The amount of desiccant is established by considering the volume of air in the container, the degree of humidity permissible, and the time involved. Neither vaporproof packaging nor desiccant is enough by itself to prevent damage to parts by moisture. Both are needed to keep moisture out and to maintain the humidity within the package at a safe low value.

Desiccant and humidity indicators may be enclosed in the environmental package. The desiccant should be of the nondusting type in cleanable bags, and should conform to MIL-D-3464. Desiccant bags should be wiped clean with a solvent-dampened cloth before use or sealed in a nylon bag. An example of an environmental package with desiccant enclosed is shown in Figure 10.

Humidity indicators should conform to MS 20003. These are three-spot cards with impregnated areas of cobaltous chloride. The indicator should be firmly secured directly behind inspection windows or immediately within the closing edge, face or cover of the barrier, whichever is applicable. The indicator should be located as far as practicable from the nearest unit of desiccant. When specified, externally mounted

indicating elements or devices should be installed in the barrier in place of, or in addition to, the humidity indicators mentioned above. Externally mounted color change humidity indicating devices shall conform to MIL-I-26860.

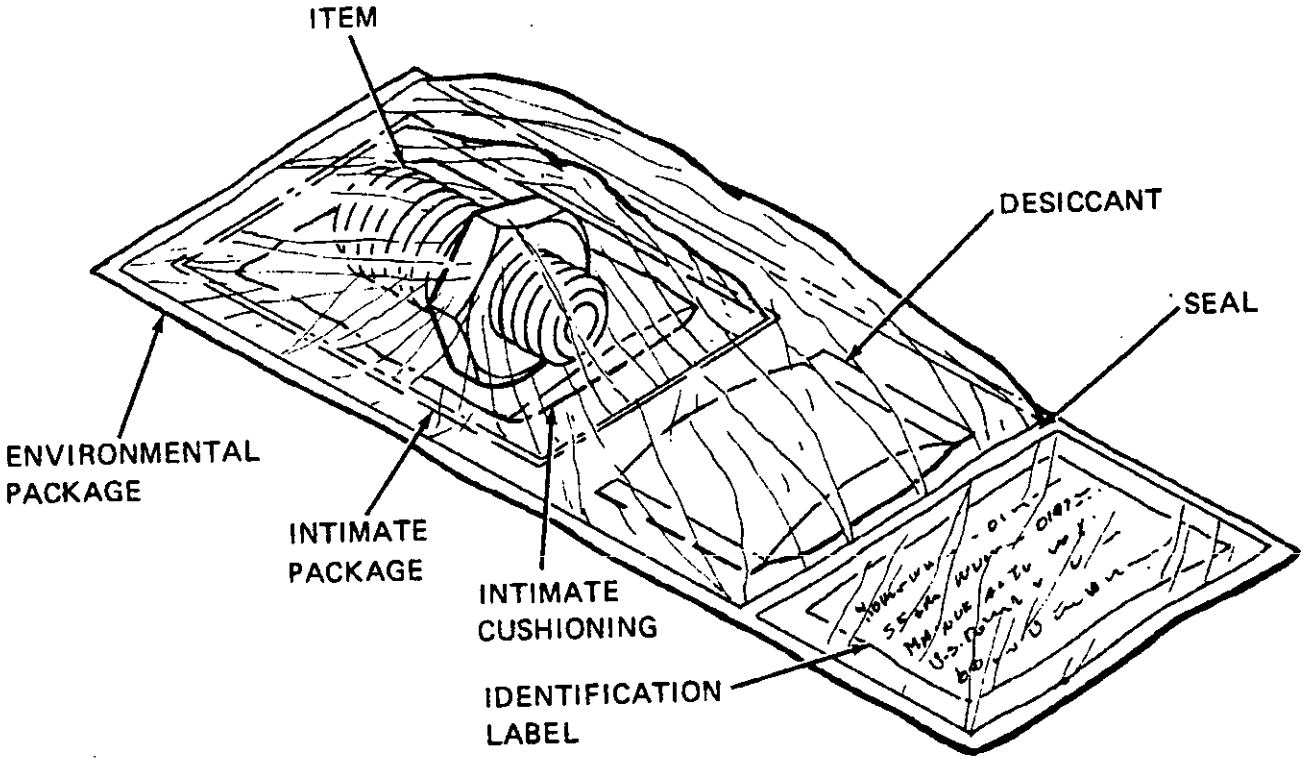

Figure 10. Environmental package with desiccant

7.4.1.1 Quantity of desiccant. The minimum quantity of desiccant for use per package shall be determined in accordance with Formula I or Formula II of MIL-P-116 given below. Note: When the desiccant is applied in the clean room in the environmental package, it must be contained in a clean packaging material such as nylon or polyethylene. Since this material will usually be less porous than desiccant bags used outside of the clean room, the time for equilibration may be longer.

Formula I - to find the number of units of desiccant for use within barriers other than sealed rigid metal barrier: U = C A plus XD.

Formula II - to find the number of units of desiccant for use within sealed rigid metal barriers: U = KV plus XD.

In the above formulas:

U = Number of units of desiccants to be used.

C = 0.011 when area of barrier is given in square inches.

C = 1.6 when area of barrier is given in square feet.

A = Area of barrier in square inches or square feet.

K = 0.0007 when volume is given in cubic inches.

K = 1.2 when volume is given in cubic feet.

V = Volume within barrier in cubic inches or cubic feet.

X = 8 for hair felt, cellulosic material (including wood) and other material not categorized below.

X = 6 for bound fibers (animal hair, synthetic fiber or vegetable bound with rubber).

X = 2 for glass fiber.

X = 0.5 for synthetic foams and rubber.

D = Pounds of dunnage (other than metal) within barrier.

Note: For all practical purposes, the XD portion of the formula can be omitted when finding the amount of desiccant to be applied in the environmental package since hair felt, cellulosic material and fibers will not be contained in either the intimate package or the environmental package. When desiccants are added in the intermediate package or in a pack, the XD portion of the formula would be used.

Formula II may be used to determine the units of desiccant required for sealed rigid containers other than all metal when the sealed barrier provides a WVTR not exceeding 0.001 grams per 24 hours per 100 square inches as established by Government specification or when tested in accordance with Method 252 of Federal Test Method No. 101.

7.4.2 Identification tags and labels. Identification tags and labels may be placed between the intimate package and the environmental package. In some situations, the label may be attached in the external portion of the package when a plastic film wrap or bag is used. Stamping and marking ink shall be of a permanent or etching type which is non-sloughing and non-smearing when dry. Tags should be stamped or marked prior to entry to the clean room. After sealing the package, the label is placed within the excess portion of the film which is sealed to retain the label. Special information such as requirements for purging, pressurization, desiccation, evacuation, or long term storage provision should also be identified on the package or closure. An example of a package with the label inserted is shown in Figure 10.

7.4.3 Purging. Purging of the environmental package may be accomplished as described in 7.3.1.1.

7.4.4 Removal of air or gas. Removal of air or gas either by vacuum evacuation or hand expulsion may be accomplished as described in 7.3.1.2.

7.5 Sealing. Techniques for effectively sealing packaging materials to assure the integrity of the enclosed clean item depend on the type of material and the closure or wrap. Sealing methods described in the following paragraphs are some which have general application for the common types of wraps or closures. Each particular packaging situation requires individual consideration to select or develop the most effective method of sealing.

Koonce (Ref. 5) evaluated seals by determining the tensile strength of loops of 5-mil films made from strips 1/2 inch wide. He determined the load that caused the joint to fail. Seal strength is especially important when the parts being packaged are heavy. Table VIII shows the impulse (heating) time, the dwell (cooling) time, and the load corresponding to maximum joint tensile strengths recorded.

7.5.1 Operator technique. Operator technique is critical for the effectiveness of seals. The proper warmup time, the allowance of the proper interval between successive sealings to insure ample heat buildup, and the quick determination of the best setting on the sealer being used are also important. Some advertising literature on sealers contradicts user experience in claiming that no practice and no warmup time is required.

7.5.2 Heat sealing. Heat sealing is the simplest and most commonly used method for joining plastic films of the same type or different types. It eliminates the need for adhesives and other forms of mechanical fasteners.

The effectiveness of heat-sealed seams is described in Procedure Method B, Method 1013 of L-P-406. A strong seal is especially important when large or heavy items are being packaged (Ref. 4).

The major techniques of heat sealing which are currently in use are thermal, ultrasonic, and dielectric. There is a preferred method for each type of film; however, many of the films can be sealed by more than one method. An effective hermetic seal can be achieved on most of the plastic films by at least one of these methods. Table IX lists the plastic films used for precision packaging with the methods that may be used for sealing.

Table VIII.

Maximum joint tensile strength reported for 1/2-inch wide strips of 5-mil films

Film	* Impulse (Heating Time, Sec)	** Dwell (Cooling Time, Sec)	*** Load, lb
Polyethylene	0.9	2.5	9.7
Nylon C	1.8	1.0	9.2
Aclar 33C	1.8	2.5	17.0
Mylar	1.8	1.0	5.0
Film-O-Rap 7750	1.8	1.0	19.5
Capran	1.8	2.0	21.0

* Impulse (heating) time was varied from 0.6 to 1.8 sec.

** Dwell (cooling) time was varied from 4.0 to 0.0 sec.

*** In each case the material failed in the heat-affected zone immediately adjacent to the sealed joint.

Table IX.

Plastic film heat sealing methods

Film Type	Dielectric	Thermal	Ultrasonic
Polyethylene	O	X	X
Polyamide (nylon)	X	X	X
*Polyester	X	O	X
Fluorohalocarbon	X	X	X
Polycarbonate	O	X	X
Polypropylene	O	X	X
Polyurethan	X	X	O
Polyvinyl Chloride	X	X	O

X - Sealable

O - Not Sealable

* Sealable if benzyl alcohol is also applied

7.5.2.1 Thermal sealing. Thermal sealing is the direct application of heat to the films for a sufficient period of time for the films to melt and fuse together. The preferred sealing method for clean packaging is thermal impulse sealing wherein the sealing units feature metal ribbon sealing members heated instantly by am impulse of current. The metal ribbon, usually of nichrome, is mounted on one or both of the rubber-blanketed jaws of the impulse machine. The difference between impulse sealers and continuously heated ones is the very short time the former remain hot. As with jaw-type bar sealers, a release agent (Teflon-coated fiberglass) should be suspended between the sealing member and the film to be sealed. After the film is placed between the jaws of the unit, the jaws are closed and an impulse of current heats the nichrome band which seals the film. Duration and amount of current is automatically controlled to yield the required heat over the correct time span. This heating cycle is then followed by a cooling period

with the material held in place by pressure on the die, which assures an effective seal without distortion or separation.

Other methods of thermal sealing are the bar sealer and the rotary band sealer. These units feature sealing members which remain hot as long as the units are running. Each unit has two members, usually of heat resistant steel. One or both members may be heated, depending on the unit and the heat required to make a seal. In either case, both members press against the film.

In the bar sealer, the film is placed between the sealing bars which close to seal the film. Temperature-sensing devices are mounted close to the sealing surface of the dies to control the temperature, as effective control of the temperatures determines the strength and quality of the seal. The lower bar of the sealer is covered by a resilient blanket (silicone rubber) which assures good bar-film contact and even pressure throughout the seal length. To prevent hot film from sticking to the upper bar, not covered by a blanket, Teflon-coated fiberglass should be suspended between the bar and the film to be sealed. The fiberglass, which hangs free of the bar when the bars open, cools quickly, thus serving as a release agent. A press is employed to apply pressure to the dies for the time required for the films to melt and fuse, and then the bars are separated and the sealed film allowed to cool.

Continuous seams can be made by using a rotary band sealer. The film is fed between two constantly moving rotary bands, both heated by jaws. At the heated jaws the bands press against the film to form a continuous seal. The sealed part is transported by the bands through cooling jaws where the hot film cools so that it can be released from the bands. Uncoated or Teflon-coated metal bands may be used, the latter having nonstick properties. Films which can be effectively sealed by this method are generally those which can be removed hot from the die without distortion or separation of the seal. Nylon and Aclar are difficult to seal by the constant heat, hot-bar method.

In both methods the flatness of the die faces which contact the material is important to ensure uniformity of pressure applied in all areas for a homogeneous seal. Materials of construction for dies should be similar throughout to avoid bimetallic distortion due to differences in the thermal coefficient of expansion of dissimilar materials. Effective use of insulating materials and barriers is required for good temperature control.

7.5.2.2 Ultrasonic sealing. Joining plastics by ultrasonics employs high frequency mechanical vibration to produce molecular motion

or jostling at the interface. The localized heating results in a natural molecular bond without deforming, distorting, or changing the properties of the material. The material to be joined is placed between a solid anvil and an ultrasonic tool, which provides the mechanical vibrations. The quality of the bond formed depends on the pressure of the tool on the work surfaces, the length of time the vibrations are impressed, and the amplitude of the tool vibration. Either the tool or the film may be moved to make a seal of a required length. The thickness of the material and the type of plastic must be considered in designing the sealing procedure. Common ultrasonic sealers are rated from 100 to 500 watts. Machine producers should be contacted for operating guides.

Ultrasonic sealing can be used for plastic films, but it is generally considered too expensive and too slow a process for this purpose. It is used extensively for bonding rigid plastics.

7.5.2.3 Dielectric sealing. Dielectric sealing utilizes radio frequency (RF) to produce the heat and fusion process. By directing high-frequency waves at the films to be sealed, the films molecules are excited to such a degree that they build up heat which melts the film. The films being joined act as the dielectric between the plates of a capacitor which are the the die face and the press platen. The plates are connected to a RF generator which induces molecular vibrations within the plastic and the resulting friction produces heat uniformly throughout the film seal area. Since the plates or dies are cool, heat loss to the plate cools the film surfaces so that only the interfaces melt and fuse together forming a bond. To prevent excess pressure on the film, the descent of the die onto the plate is controlled by setting press stops to leave an air gap between the two.

The frequency allocated by the Federal Communications Commission (FCC) for unlimited operation of this equipment is 27.12 MHz. This frequency provides effective sealing of most materials sealed by this method. Operation at other frequencies requires that the radiation be maintained below the level of interference specified by the FCC.

The major advantages of the dielectric method of sealing are the speed, ease, and simplicity of producing effective seals with good reproducibility and reliability. After sealing, the material can be cooled under pressure to achieve maximum seal strength and quality.

Dielectric sealing is normally used only in the manufacturing process for high volume plastic products, due to the high investment required for the device and the shielded facilities. It is not generally used for clean packaging applications.

7.5.3 Tapes, ribbons, and ties. Some types of closures may be adequately sealed by applying pressure-sensitive tape, ribbon, or other ties over a flexible film and drawing it tight around an outside portion of the item and securing it in place. In some instances, pressure-sensitive tape may be used partially on the packaging material and partially on the item to secure a seal. In other applications, the tape may be used to seal the opening in the packaging material. The use of tape should be in a manner that will not contribute to the contamination of the clean item or surface.

7.5.4 Compression seals. Gaskets, o-rings, and similar type materials may be used to form a seal over or around a closure on an item or between two parts of a rigid container. Materials used for this type of seal should be cleaned to the same level as the item and of a type that will not contribute contamination. A means for compressing the seal is required (usually pressure in a rigid container), and the mating surfaces must be relatively uniform to assure uniform pressure over the seal area.

7.6 Integrity seals. After precision packaging has been accomplished, it is important that any violation of the integrity of the package be detected. The package must be made as tamper-proof as practical since the package and the item are an inseparable unit, and damage to the package is presumed to be equivalent to damage to the part (Ref. 3).

There are several means that may be used to indicate violation of the precision package. Some of the most common are:

(a) Sealant matter or torque-paint applied to a closure in such a manner that breaking of the closure will be indicated.

(b) Safety wire and lead seal applied to a capped, plugged, or bolted closure or for lid type containers.

(c) Torque-paint applied to threads of bolts or nuts or bolted or screw type closures.

(d) Frangible (egg shell) decalcomania or seal.

(e) Labels, stickers, or stamps across a seal.

(f) A strippable coating applied over the precision package.

(g) Pressure indicators for pressurized packages.

The requirements for using integrity seals and the method of application should be specified for each particular type of package

seal. Some form of marking is usually included on the seal such as date and place used or other identification.

The purpose of the tamper-proof seal is to provide an inspection technique that will prevent the storage or use of contaminated articles and at the same time permit action to be initiated to reject or reclean the article. The use of such a device serves the secondary function of attracting attention to the sensitivity of the package, resulting in more careful treatment and handling.

Tamper-proof seals are to be applied in the area in which final cleaning inspection, assembly, testing, and sealing are performed.

7.7 Certification labels. A certification label should be attached to or included in each package or closure of a precision cleaned item. The label should be readily visible and should not come in contact with the contamination sensitive surface of the packaged item. For multiple closures on a single part or for multiple packages in an inseparable lot, a single certification tag may be used as long as the number of closures or packages is indicated on the label.

The certification tag should have the following information entered in the appropriate spaces in a legible and permanent manner.

(a) Month, day, and year that the clean item was packaged.

(b) Cleaning specification or procedure number.

(c) Level of cleanliness achieved with reference to the above requirement.

(d) Shelf life or intended useful age of the package or packaged item, if applicable.

(e) Inspection stamp.

(f) Complete part identification.

7.8 References.

1. "Clean Packaging Materials and Methods," Dan C. Anderson, Contamination Control, December 1969

2. Corrosion Prevention/Deterioration Control in Electric Components and Assemblies, Engineering Report CR-6-347-958-001 to U. S. Army Missile Command, AMC 1400-A019, 1971.

3. Handbook for Contamination Control on the Apollo Program, NASA, Washington, D. C., August 1966.

4. "Packaging Aerospace Hardware Methods and Problems Of," J. M. Pilcher, Proceedings of NASA Cleaning Conference, January 1966.

5. "Plastic Film Packaging Materials," J. S. Koonce, NASA Test Report No. TE-92-D, Task Order LOD-CH-86, Kennedy Space Center, 9 October 1964.

SECTION 8

PACKAGING PROCEDURES

8.1 General procedures.

8.1.1 Requirements. All packaging materials used to package cleaned surfaces shall be one or more of the following. Packaging materials shall be cleaned to a level sufficient to maintain the cleanliness of the precision cleaned item.

8.1.2 Materials.

Fluorohalocarbon film, 2-mil, tested in accordance with MSFC-SPEC-106A.	MSFC-SPEC-456
Nylon 6 film, 2-mil.	MSC-C-12A
Polyethylene, 6-mil tinted antistatic film.	L-P-378, Type II
Tape.	PPP-T-60, Type I, Class 1 or PPP-T-66
Nitrogen gas.	BB-N-411 or MIL-P-27401

8.1.3 Packaging procedure for service media. The following materials for packaging shall apply with regards to the service media.

(a) All component parts, subassemblies, and assemblies utilized in oxygen systems shall require material meeting MSFC-SPEC-456 for LOX compatibility as the intimate cushioning, wrap or package and opening coverings. LOX compatible bags must be sealed on all sides, never centerfolded. This is due to the sloughing characteristics of most fluorohalocarbon films.

(b) All other system parts will require nylon 6 as intimate cushioning, wrap or package and for covering openings.

8.1.4 Type I closures - externally cleaned items. Type I closures shall be applied to externally cleaned items such as valves, seals, springs, filter elements, washers, pins, nuts, bolts, and fittings.

(a) Sealing of openings. When the externally cleaned item has fittings or other openings leading to cleaned inner surfaces, the item shall be purged and all fittings and other openings shall be capped, plugged, or otherwise sealed in accordance with Type II closures.

(b) Intimate cushioning will be accomplished as follows:

(1) Heavy items or items having threads, sharp points, or edges which could puncture or otherwise damage the barrier bags, shall be overwrapped with a sufficient amount of 2-mil nylon 6 to form a cushion.

(2) Secure the cushioning film with tape whose adhesvie shall not come in contact with the precision cleaned item.

(c) Intimate packaging will be accomplished as follows:

(1) Place the part with its cushioning, if applied, into a bag.

(2) The interior of the bag and cushioned item shall be purged with nitrogen gas (GN_2) immediately prior to evacuation and heat sealing.

(3) Gently compress bag around the item to force out excess nitrogen gas.

(4) Heat seal bag.

Note: Due to applicable vendor requirements, it may be necessary to pull a vacuum on the intimate bag. Process as follows:

(5) Insert vacuum pump tube needle, at a corner location of the bag, pull vacuum until bag collapses firmly about the enclosed part, remove needle and immediately heat seal corner of bag.

(6) Apply tamperproof seal, at heat sealed end of bag, if required.

Note: Certification tags or decals containing identification, inspection, and cleanliness information may be used as tamperproof seals if applied in such a manner as to detect opening or tampering with the intimate package.

(d) Environmental bagging, if required, will be accomplished as follows:

(1) Select, or fabricate, proper size bag.

(2) Place intimate package in envrionmental bag.

(3) Gently but effectively compress bag with hands to force out excess air.

(4) Place certification card into bag.

(5) Heat seal bag.

Note: Due to applicable vendor requirements it may be necessary to pull vacuum on the environmental bag. Process as follows:

(6) Insert vacuum pump tube needle at a corner of environmental bag, pull vacuum until bag collapses firmly about enclosed bagged part, remove needle and immediately heat seal corner of bag.

8.1.5 Type II closures-internally cleaned items. Type II closures shall be applied to those items which cannot normally be heat sealed in a transparent film bag because of size, weight, or configuration and have precision cleaned interior surfaces only. Type II closures are to be used on such items as valves, regulators, transducers, and instruments. All fittings or other openings leading to precision cleaned inner surfaces shall be capped, plugged, or otherwise sealed. Intimate cushion wraps, packages and closures must conform to 7.1.3(a).

(a) Capped or plugged closures will be accomplished as follows:

(1) Select threaded caps for male thread connections and threaded plugs for female thread connections.

(2) Carefully mate the cap or plug to the connection by applying a minimum of torque to seat and seal the closure.

(3) The item may be purged with dry nitrogen prior to sealing the final closure.

(b) Film shut closures will be applied to openings which cannot be sealed with caps or plugs and will be accomplished as follows:

(1) Apply a double layer of nylon 6 over inlet and outlet ports, fitting ends, and other openings.

(2) Secure each layer of film in place with a minimum of two tight wraps of tape. The tape will not contact the body of the item.

(c) Environmental packaging will be accomplished as follows:

(1) Completely wrap or bag each item with sealed openings with antistatic polyethylene film.

(2) Secure with tape or heat seal where practicable.

Note: Sealing of items that may be exposed to temperature variations during transport and storage shall be adequate to prevent the internal volumes of the item from breathing.

Note: The size of the part being packaged by Type II will be the deciding factor with regards to the environmental bagging. When feasible, parts that measure four inches or less in any direction shall be placed in an environmental package. Process as follows:

(3) Select, or fabricate, proper size bag.

(4) Place intimate packaged part into environmental bag.

(5) Gently, but effectively, compress bag with hands to force out excess air.

(6) Place certification card into bag or attach to outside.

(7) Heat seal bag. Do not pull vacuum.

8.1.6 Type III closures - hose and tube assemblies. Type III closures shall be applied to pipes, ducts, expansion joints, and hose and tube assemblies where external surfaces do not require critical or visual cleanliness. The items shall be purged internally and sealed to preserve their cleanliness. Each fitting shall be sealed with the appropriate plastic closure. Intimate cushion wraps, packages and closures on oxygen system components must conform to 7.1.3(a).

(a) Film closures of openings will be accomplished as follows:

(1) Purge the item with nitrogen gas.

Note: Prior to application of film closures on openings of tube assemblies and other items that contain "B" nuts and sleeves, move "B" nuts and sleeves approximately two inches and secure with tape.

(2) Apply a double layer of nylon film over opening of item.

(3) Secure each layer of film with tape.

(b) Application of environmental wrap will be accomplished as follows:

(1) Apply a film of antistatic polyethylene film over the item and closures.

(2) Secure film with tape.

Note: The size of the part being packaged by Type III closures will be the deciding factor with regards to the environmental package. When feasible, parts shall be placed in an environmental bag. Process as follows:

(3) Select, or fabricate, proper size bag.

(4) Place part with film closure into environmental bag.

(5) Gently, but effectively, compress bag with hands to force out excess air.

(6) Place certification card into bag.

(7) Heat seal bag.

Note: Parts with large flange areas (four inches and greater) may require special handling and processing. When this is the case a special packaging and handling process will be issued with regards to the part involved.

8.2 Various systems and related components packaging procedures. The various systems and the related components presented in the following paragraphs shall be precision packaged as specified herein to prevent contamination after cleaning, during receiving, inspecting, testing, assembling, handling, maintaining, shipping and storing operations.

8.2.1 Requirements. All packaging materials used to package the cleaned surfaces shall be one or more of the following and packaging shall be accomplished per the cleaning specification,(Ref. 8).

8.2.2 Materials.

Nitrogen (Type I, Class 1, Grade B) (Prefiltered to a 100-micron level (absolute) with an oil content not greater than five parts per million by weight, and a water content not greater than 24 parts per million by volume.)	BB-N-411
Nitrogen (Type I). (Prefiltered to a 100-micron level (absolute) with an oil content not greater than five parts per million by weight, and a water content not greater than 24 parts per million by volume.)	MIL-P-27401
Filtered air. (prefiltered to a 100-micron level (absolute) with an oil content not greater than five parts per million by weight, and a water content not greater than 24 parts per million by volume.)	
Teflon film.	MSFC-SPEC-236
Fluorohalocarbon film 2-mil, tested in accordance with MSFC-SPEC-106A.	MSFC-SPEC-456
Nylon 6, 2-mil, 5-mil	MSC-C-12A

Polyethylene, 6-mil tinted antistatic film.	LP-378 Type II
Tape, pressure sensitive.	PPP-T-66. Type I, Class 1
Tags, shipping and stock.	UU-T-81
Hydraulic Fluid, Petroleum Base: Aircraft, Missile, and Ordnance.	MIL-H-5606

8.2.3 Pneumatic systems.

(a) Covering of openings will be accomplished as follows:

(1) Place a sheet of 2-mil fluorohalocarbon film over all threaded and unthreaded openings.

(2) Secure with pressure sensitive tape that shall not come in contact with the item.

(3) Place a layer of polyethylene over the covered openings.

(4) Secure with pressure sensitive tape in a manner that will prevent it from contacting the item.

Note: Large openings may require additional layers of polyethylene to prevent rupture of the intimate cover.

(b) Environmental packaging will be accomplished as follows:

(1) Select, or fabricate, a bag of polyethylene.

(2) Place the item into bag.

(3) Purge the bag with nitrogen.

(4) Gently press the bag around the item to force out any excess gas.

(5) Secure the bag with tape, or heat seal when practicable. The tape shll be applied so that it will not be in direct contact with the item.

Note: The component size will determine whether the bag is taped or heat sealed closed.

8.2.4 Fuel systems.

(a) Closure of all threaded and unthreaded openings and other surfaces requiring covers will be accomplished as for pneumatic systems and components (7.2.3(a)).

(b) Environmental packaging of all components will be accomplished as for pneumatic components (7.2.3(b)).

8.2.5 Liquid oxygen systems.

Note: Testing or purging of liquid oxygen systems and related components shall be accomplished by the use of either nitrogen, Type I, Grade 1, Class B or filtered air.

(a) Closure of all threaded and unthreaded openings and other surfaces requiring covers will be accomplished as for pneumatic systems and components (7.2.3(a)).

(b) Environmental packaging of all components will be accomplished as for pneumatic components (7.2.3(b)) with the exception that fluorohalocarbon film should be used for intimate cushion wrap, packages and closures.

Note: Bags used for the packaging of LOX components shall be heat sealed on all sides, never center-folded.

8.2.6 Hydraulic systems.

8.2.6.1 Packaging of components except filter elements.

(a) Closure of all ports of components will be accomplished as for pneumatic components (7.2.3(a)).

(b) Environmental packaging of components will be accomplished as follows:

(1) Select, or fabricate a visually clean antistatic polyethylene bag.

(2) Place item in bag.

(3) Purge the bag with nitrogen, Type I, Class 1, Grade B.

(4) Heat seal both ends of bag.

8.2.6.2 Packaging of filter elements.

(a) Intimate packaging will be accomplished as follows:

(1) Wrap element with 2-mil fluorohalocarbon film.

(2) Secure wrap with pressure-sensitive tape. Apply the tape in a manner that it will prevent it from contacting the surface of the component that normally contacts the service medium.

(b) Environmental packaging will be accomplished as for pneumatic systems.

8.2.7 Gas bearing and slosh measuring systems.

Note: Gas supplies used for the gas bearing and slosh measuring system shall be as specified and determined by MSFC-PROC-195.

(a) Covering of fittings, openings, and other critical surfaces and other openings will be accomplished as follows:

(1) Place a double layer of antistatic polyethylene over critical surfaces.

(2) Secure the film with pressure sensitive tape, making sure that the tape does not directly contact the surface of the item.

(b) Environmental packaging will be accomplished as for pneumatic systems (7.2.3(b)).

8.2.8 Electronic components.

(a) Closures of unmated electrical connectors will be accomplished as follows:

(1) Cover all unmated connectors with protective caps and plugs compatible to the requirements of the system.

Note: Antistatic polyethylene film secured with pressure sensitive tape may be used as an alternate protection method.

(b) Environmental packaging will be accomplished as follows:

(1) Select, or fabricate, a visually clean polyethylene bag.

(2) Place component in bag.

(3) Heat seal the end of the bag.

Note: The environmental packaging may be accomplished in a controlled area.

8.3 Packaging procedures for field force protection.

8.3.1 Electrostatic protection. Electrostatic protection shall be provided by a bag or wrap fabricated from an identifiably colored homogeneous antistatic plastic film having sufficient conductivity on all surfaces to permit controlled bleed-off of static charges to ground without the production of a spark. Cushioning materials used with electrostatic sensitive devices shall also be homogeneously antistatic and noncorrosive, (Ref. 1,6).

8.3.2 Electromagnetic protection. Electromagnetic protection shall be provided by an intimate package of antistatic plastic and environmental package with aluminum foil or a bag fabricated from a laminate containing aluminum foil such as those conforming to MIL-B-131. Foil laminate bags shall be constructed by center folding a single sheet of material of proper size to eliminate possible capacitor effects. Figure 11 shows the construction of the environmental package, (Ref. 6).

Caution: In no case shall the aluminum foil be allowed to come into direct contact with the device.

8.3.3 Magnetic protection. Magnetic protection of an item may be provided by first packaging the item according to procedures for electrostatic protection (7.3.1). When required, additional protection against simple magnetic fields (as opposed to RF or electromagnetic radiation) may be provided by enclosing the packaged item in materials composed of ferrous metal or ferritic compositions. These materials must be of sufficient thickness to provide the degree of protection required by the particular item.

8.3.4 Radioactivity protection. Protection against radiation from radioactive sources may be provided by first packaging the item according to the procedures for electrostatic protection (7.3.1). When specified, further protection may be provided by completely enclosing the item in materials of lead or lead filled compositions. These materials must be of sufficient thickness to provide the degree of protection required by the particular item.

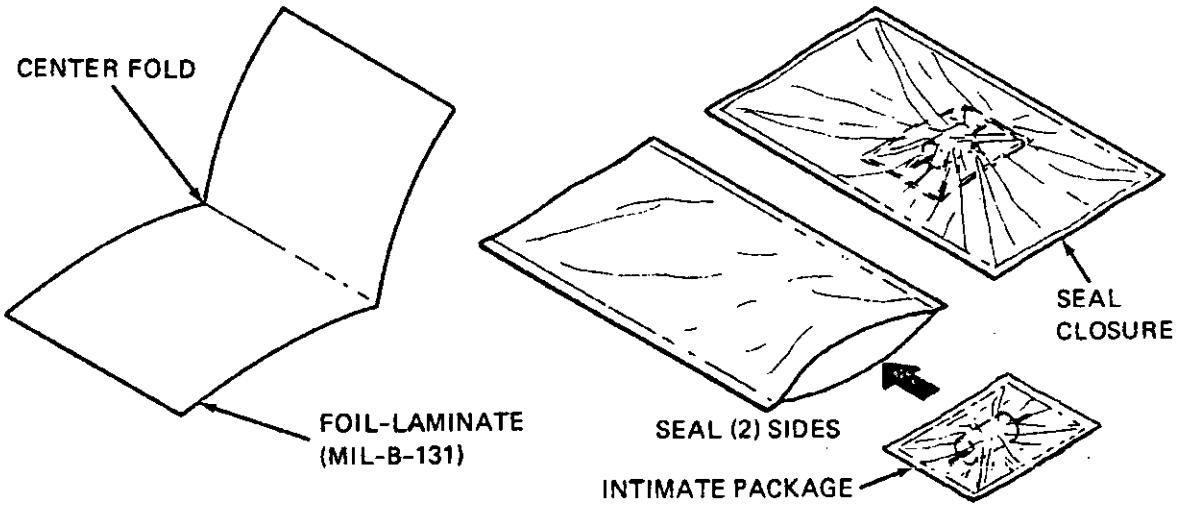

Figure 11. Construction of environmental package for electromagnetic protection

8.4 References.

1. Antistatic and Precision Clean Packaging, Dan C. Anderson, presented to The Annual Contamination Control Symposium, 3 March 1969.

2. Cleaning Conference Proceedings, MSFC/NASA, January, 1966.

3. Cleanliness Levels, Cleaning, Protection, and Inspection Procedures for Parts, Field Parts, Assemblies, Subsystems, and Systems for Pneumatic Use in Support Equipment, MSFC-PROC-10M01671, 28 April 1964.

4. "Clean Packaging", J. Mason Pilcher, N.G. Foss, and C. W. Cooper, Contamination Control, Vol. IV, No. 4, April 1965.

5. "Clean Packaging Materials and Methods", Dan C. Anderson, The Richmond Corporation, Contamination Control, December, 1969.

6. Contamination Control and Environmental Protection of Space Launch Vehicles and Associated Equipment, MSFC-PROC-151, 29 March 1963.

7. Contamination Control Handbook, Sandia Laboratories, NASA-SP-5076, February 1969.

8. Contamination Control Program Requirements, Vol. 1, MSCM 5322, September 1970.

9. Contamination Control Technology, AMC-MIL-HDBK-407, January 1972.

10. Corrosion Prevention/Deterioration Control in Electric Components and Assemblies, Engineering Report, CR-6-347-958-001 to U. S. Army Missile Command, AMC 1400-A019, 1971.

11. Disassembly, Cleaning, Inspection, Assembly, and Packaging Procedure, TMC SPEC. No. 10008.

12. Electronic and Electrical Equipment, Accessories, and Repair Parts; Packaging and Packing Of, MIL-E-17755, 15 April 1970.

13. Field Force, Protection For, NAS 853, 1968.

14. "Film Versus Foil for Clean Packaging of Aerospace Hardware", Dan C. Anderson, 1966 Proceedings Fifth Annual Technical Meeting and Exhibit, American Association for Contamination Control, Boston, Mass., 1966.

15. General Packaging Standard, NAS 850, 1968.

16. Handbook for Contamination Control of Liquid Rocket Propulsion Systems, AIA, August 1961.

17. Handbook for Contamination Control on the Apollo Program, NASA, Washington, D. C., August 1966.

18. NASA/MSFC Standard Preservation, Packaging, Packing, Handling and Shipping of Space Vehicle Supplies and Associated Equipment, MSFC-STD-343, 9 March 1965.

19. Packaging and Pack Engineering, Engineering Design Handbook, U. S. Army Material Command, AMCP 706-121, March 1972.

20. Packing and Packing of Parts, Repair Parts, and Components for Space Vehicles, Ordnance Corps, Dept. of the Army, A10509302, 16 May 1960.

21. Precision Cleaned Items, Contamination Barrier For, NAS 3447, Nov. 1968.

22. Precision Cleaning and Packaging of Nonmetallic Items, TMC SPEC. No. 21016.

THIS PAGE LEFT INTENTIONALLY BLANK

SECTION 9

PREPARATION FOR SHIPMENT AND STORAGE

9.1 Physical protection for intraplant transporation. Precautions shall be taken to insure that clean packages or closures are properly identified and protected from damage during handling, and intraplant transportation. Such precautions may include but not be limited to the following devices:

(a) Durable overpack.

(b) Shock resistant mountings.

(c) Bright colored, well marked containers, labels, or wrapping material for warning purposes.

(d) Specially made or adapted containers, tote boxes, or trays to provide protection and convenience of handling.

(e) Specially built or adapted transportation which will offer suitable protection to the subject item.

(f) Written instructions posted in an obvious position directing special handling, storing, or transportation procedures.

9.2 Environmental protection measures.

9.2.1 Environmental wrap. Precision packaged items which have not been environmentally wrapped in the clean room or controlled environment shall be enclosed in a sealed barrier conforming to Class 1 or 2 of MIL-B-130 or Type I of MIL-F-22191, as required by the applicable sub-method of MIL-P-116. Unless otherwise specified, when flexible barrier materials are used, the edge of the barrier which normally will be opened at destination shall be of sufficient area to permit at least two subsequent sealings.

9.2.2 Desiccants. Desiccants are dehydrating agents which absorb moisture from the surroundings by physical or chemical means, thus providing humidity control within the package. The most commonly used desiccants are the activated types: silica gel, activated charcoal and activated alumina.

Desiccants used in the intermediate package shall conform to MIL-D-3464. Standard size bags of desiccant should be located in the package so that all voids are exposed to the dehydrating action of the desiccant. Securing of bags may be accomplished by tying, storing in specially provided baskets, taping or other approved means.

The minimum quantity of desiccant for use per package shall be determined in accordance with Formula I or Formula II of MIL-P-116 as applicable. (See Section 6.4.1.1).

9.2.3 Humidity indicators. There are three basic types of humidity indicators used in packaging. These indicators are used to provide an indication of the humidity within a package (Ref. 7).

9.2.3.1 Card-type, three-spot indicators (MIL-STD-20003). This humidity indicator is a 2 x 4-inch paper card containing three circles which change their color from blue to pink when the humidity reaches the indicated percentage shown in the circles (30, 40, and 50 percent).

9.2.3.2 Desiccant type indicators. These indicators change color to indicate the relative humidity in a range from 20 percent to 60 percent.

9.2.3.3 Plug-type color change indicators (MIL-I-26860). These indicators provide an exterior indication of the humidity within a package and are available in two types: Type I for mounting in a threaded boss, and Type II for mounting with a self-contained locknut. Type I indicators are suitable for installation in threaded plug openings of engine cylinders while Type II indicators are suitable for attachment in barrier material or in metal containers. Plug-type indicators change color from blue to pink when the relative humidity inside the package reaches 40 percent.

9.2.3.4 Electrical humidity indicators. Electrical humidity indicators are used in Method II packaging when more precise indication is required for a relatively long period of time. This method uses a sensing element which is sealed in the package. The necessary conductors extend from within the package, through the vaporproof barrier, to a connector (or terminal) on the outside of the exterior container. The humidity level of the package interior can be read on a portable indicating device, which is connected to the exterior connector (Ref. 7).

9.3 Determination of required protection. After a precision cleaned item has been packaged and leaves the clean room environment, it must be adequately protected during shipping and storing. Improper packaging and packing can result in the nullification of all precision packaging and cleaning techniques used in the clean room.

The amount of protection required for precision packaged items will depend on several factors. These factors are described in the following paragraphs.

9.3.1 Size and type of clean packaged item. The shape, size, weight, strength, availability of mounting provisions if applicable, and disassembly requirements of an item must be considered in preparation for shipping and storage.

The characteristics of size and weight are important in selecting submethods are defined in MIL-P-116 , and type and amount of cushioning required. They directly influence the kind of container that will be used and the type, grade, and class of applicable container.

The exterior shape of an item is a factor in determining the type and amount of cushioning and support required to protect the precision packaged item. A light smooth item with no projections requires less cushioning than a heavy item having sharp edges or points that could damage the package. Cushioning required to protect the item against vibration and impact shock is determined in additional consideration of the fragility of the item and its size and weight.

A large packaged item does not necessarily require more extensive or stronger packing, or larger amounts of cushioning than a smaller item because of its size alone. However, the container needed by the larger item may require more extensive and stronger blocking to bridge the wider spans between the container devices or frame members. (Ref. 3).

The weight of an item determines the design of block, bracing, and cushioning because the impact force developed by the sudden stop of a moving item is directly proportional to its weight.

9.3.2 Storage considerations. A precision packaged item must be protected throughout the time it is in storage, without the need for repackaging. Storage may be for indefinite periods of time in both protected and unprotected storage areas. During the storage period, the package must protect the item against physical damage and environmental contamination. In some cases, provisions must be incorporated for inspecting and performing maintenance on the packaged item.

9.3.3 Means of transporation. Four major types of transport are used in the transportation of precision packaged materiel: truck, rail, air, and sea. The means of transportation becomes a factor in the packaging and packing of precision packaged items primarily when the package is being transported overseas by sea.

9.3.4 Destination. The environmental conditions during transportation and at the point of destination are a factor to be considered when packaging or packing a precision packaged item. The packaging engineer should know whether the destination of a precision packaged item is overseas or in the continental United States (CONUS).

Items which are transported or stored in extreme climates require special procedures because of the severity of the environment. Special packaging designs should be incorporated.

9.4 Levels of protection for storage and shipment. The concept of levels of protection was adopted to permit the military services to state their requirements objectively. The level of protection to be used is usually not determined by the packaging and packing activity, but by the procuring agency. The levels of protection specified in the procurement documents is dependent on known use and storage factors. When a combination of conditions used for determination of levels of protection fall within more than one level, the highest of these levels will apply.

9.4.1 Level A protection.

The degree required for protection against the most severe conditions known or anticipated to be encountered during shipment, handling and storage. Preservation-packaging and packing designated level A shall be designed for direct exposure to all extremes of climatic, terrain, operational, and transportation environments without protection other than that provided by the package and pack. The conditions to be considered include, but are not limited to -

(1) Multiple rough handling during transportation and in-transit storage from manufacturer to ultimate user.

(2) Shock, vibration and static loading during shipment, including deck shiploading and offshore or over-the-beach discharge, to ultimate user.

(3) Environmental exposure during transit where port and warehouse facilities are limited to nonexistent.

(4) Extended unimproved open storage in all climatic zones, particularly while under static loads imposed by stacking.

(5) Special package and pack features for field and combat operations (handling and utility).

(6) Special features as required by combat development agencies.

9.4.2 Level B protection.

The degree required for protection under conditions known to be less severe than those requiring level A, but more severe than those for which level C is adequate. Preservation-packaging and packing designated

level B shall be designed to protect items from physical and environmental damage during shipment, handling and storage for conditions other than those identified herein for level A or level C protection. In general, the following criteria will determine the requirements for level B design:

(1) Multiple handling during transportation and in-transit storage.

(2) Shock, vibration and static loading of shipment worldwide by truck, rail, aircraft, or ocean transport.

(3) Favorable warehouse environment for extended periods.

(4) Effects of environmental exposure during shipment and intransit transfers, excluding deck loading and offshore cargo discharge.

(5) Stacking and supporting superimposed loads during shipment and extended storage.

(6) Special features as required by military and technical characteristics and logistical considerations.

9.4.3 Level C protection.

The degree required for protection under known favorable conditions during shipment, handling and limited tenure of storage. Preservation-packaging and packing designated level C shall be designed to protect items against physical and environmental damage during known favorable conditions of shipment, handling and storage. In general, the following criteria will determine the requirements of level C:

(1) Limited handling during transportation and intransit storage.

(2) Limited shock, vibration and static loading during the transportation cycle.

(3) Controlled warehouse environment for temporary periods.

(4) Effects of environmental exposure during shipment and intransit delays.

(5) Stacking and supporting superimposed loads during shipment and temporary storage.

(6) Item characteristics require no special or peculiar preservation-packaging and/or packing provisions.

9.5 Packaging procedures. MIL-P-116 establishes three methods for the preservation of items for protection against corrosion, physical damage and other forms of deterioration during handling, shipment, and storage. Method II should be used for the preservation of precision packaged items.

Note: Methods I, IA, IB, and IC should not be used since they apply to items which have been preservative coated, and preservatives shall not be applied to precision cleaned items. Method III should not be used since it provides physical and mechanical protection only.

Precision packaged items shall be enclosed in a sealed environmental wrap barrier as required for the selected submethod, together with activated desiccants. Included air volume within the barriers shall be kept to a practicable minimum.

Note: The environmental wrap is often applied in the clean room or controlled environment. If so, it need not be applied again.

9.5.1 Submethods. The submethods of Method II of MIL-P-116 shall be used to accomplish the intermediate packaging of precision cleaned material.

9.6 Selection of container materials. Containers selected for intermediate (interior containers) packaging and packing for shipping should be durable and consistent with the logistics flow and environmental conditions which will be encountered. When possible, uniformity in basic configuration, construction, and arrangement of auxiliary features should be designed into containers. Although adequate protection of the item is the prime factor in selecting containers, the following factors must also be considered (Ref. 4):

(a) Item characteristics.

(b) Type of load.

(c) Initial cost of container.

(d) Ease of assembly and closure.

(e) Weight and cube.

(f) Availability of container.

(g) Air shipment.

Table X presents specifications for interior container types and materials. Table XI presents specifications for exterior container types and materials.

9.7 Closure materials.

9.7.1 Tapes. Tapes are classified by the type of adhesive used. The two most commonly used for the closure of containers are:

(a) Gummed tapes, which contain water or solvent activated adhesive.

(b) Pressure-sensitive tapes, which use an adhesive that adheres under pressure.

9.7.2 Straps. Metal strapping and reinforced tapes are used as reinforcement for packaging containers. Metal strapping is also used as reinforcement for blocking and bracing in exterior containers. Table XII lists the specifications pertaining to strapping and strapping equipment.

Two basic types of reinforced tapes are available: reinforced gummed paper tape (FED. SPEC PPP-T-45, Types I and II; and filament reinforced, pressure-sensitive tape (FED. SPEC PPP-T-97)).

9.7.3 Screws. Screws are often used on containers if inspection of the contents is anticipated. They are also commonly used on reusable containers.

9.7.4 Hermetic seals. The use of hermetic seals is common for the closure of rigid compressurized containers.

9.7.5 Clamps. Various forms of clamps are used to close some forms of exterior containers. These permit access to the contents for the purpose of inspection.

9.7.6 Nails. Although nails are more commonly used for fastening boxes and blocks and braces, they are sometimes used for the closure of wooden exterior containers. The disadvantage of nails for closing containers is the fact that access to the contents for inspection purposes is difficult.

9.8 Protection against shock and vibration. Physical and mechanical protection of an item from shock and vibration may be accomplished by a combination of two processes - block and bracing, and cushioning. The materials for blocking and bracing differ from cushioning materials in that the former are intended to prevent movement while the function of cushioning materials is to absorb the energy of shocks and vibrations.

9.8.1 Blocking and bracing. The purpose of blocking and bracing is to prevent any free movement of an item within a container and to distribute or transfer concentrated loads of the item to larger areas or other faces of the container.

Blocking and bracing should be used to accomplish the following (Refs. 1, 6):

(a) Immobilize an item which does not completely fill a container so that the item cannot shift within the container.

(b) Make irregular-shaped items fit a regular container.

(c) Distribute the weight of irregular-shaped items over all edges and faces of the container.

(d) Protect projections from injury.

(e) Prevent projections from damaging the barrier or container.

(f) Provide room for desiccants.

(g) Reinforce weak portions or mountings.

A wide variety of materials for blocking and bracing is available. Corrugated fiberboard, molded wood pulp, industrial fiberboard, and rigid foam or cellular plastics are used for relatively lightweight items or for supplemental primary blocking of heavy items. Large and heavy items require primary blocking materials of wood, plywood, and metal.

9.8.2 Cushioning. Cushioning, though permitting controlled movement of an item within a container, protects items from physical and mechanical damage by means of compressible and resilient materials.

9.8.2.1 Function of cushioning materials. The basic uses and functions of cushioning material are as follows: (Ref. 3).

(a) Minimize movement and vibration.

(b) Protect fragile or delicate components.

(c) Prevent rupture of barriers and containers.

(d) Distribute forces.

(e) Prevent abrasion.

(f) Absorb shocks.

Cushioning materials will be selected according to several factors; nature and physical limitations of the item; characteristics of the cushioning material; destination of the package; and means of transportation.

The cushioning of an item is determined by the following considerations:

(a) Shock resistance.

(b) Size.

(c) Weight.

(d) Shape.

(e) Surface finish.

9.8.2.2 Characteristics of cushioning materials. Characteristics of cushioning materials which should be considered are:

(a) Compression set.

(b) Resilience.

(c) Rate of recovery.

(d) Dusting.

(e) Corrosive effects.

(f) Resistance to fungus.

(g) Abrasive characteristics.

(h) Low temperature performance range.

(i) Flammability.

Table XIII presents the cushioning materials most commonly used in the packaging of precision packaged items.

9.9 Shipment planning.

The degree of protection provided by a shipping container depends upon its type, the materials used in its fabrication, its construction features, its final destination, the nature of the contents, and the anticipated hazards during storage and transportation.

Table X.

Interior container types and materials

Federal Specifications	
PPP-B-566	Boxes, Folding, Paperboard
PPP-B-636	Boxes, Fiberboard
PPP-B-665	Boxes, Paperboard, Metal Edged
PPP-B-676	Boxes, Set-up, Paperboard
PPP-C-55	Cans, Fiberboard and Paperboard (with paper and metal ends)
PPP-C-96	Cans, Metal, 28 Gage and Lighter
Military Specifications	
MIL-C-3955	Cans, Fiber, Spirally Wound
MIL-C-4470	Cans, Metal, Reusable, Rectangular
MIL-C-26094	Cans, Hermetic Sealing, Aluminum, Two Piece

Table XI.

Exterior container types and materials

Federal Specifications	
PPP-B-576	Box, Wood, Cleated Veneer, Paper Overlaid
PPP-B-585	Box, Wood Wirebound
PPP-B-587	Boxes, Wood, Wirebound, Pallet Type
PPP-B-591	Box, Fiberboard, Wood-Cleated
PPP-B-601	Box, Wood, Cleated-Plywood
PPP-B-621	Box, Wood, Nailed and Lock Corner
PPP-B-636	Box, Fiberboard
PPP-B-640	Box, Fiberboard, Corrugated, Triple Wass
PPP-B-655	Boxes, Fiberboard, Six and Eight Sides
PPP-B-1364	Box, Corrugated Fiberboard, High Strength, Weather-Resistant, Double-Wall
PPP-C-650	Crates, Wood, Open and Covered
PPP-C-1266	Container, Thermal, Shipping, for Medical Material Requiring Controlled Temperature Ranges
Military Specifications	
MIL-C-104	Crates, Wood; Lumber and Plywood Sheathed, Nailed and Bolted
MIL-C-3774	Crates, Wood; Open 12,000 and 16,000 lb. Capacity
MIL-C-4150	Case, Carrying, Waterproof and Water-Vaporproof
MIL-C-4710	Case Set, Shipping and Storage, Small Parts, Type MF-1
MIL-C-5584	Container, Shipping, Metal Reusable
MIL-C-9897	Crate, Slotted Angle, Steel or Aluminum, for Lightweight Airframe Components and Bulky Items (for Maximum Loads of 3000 Pounds)
MIL-C-9959	Container, Flexible, Reusable, Water-Vaporproof
MIL-C-11133	Crates, Wood, Slatted, Style, Wirebound, Domestic
MIL-B-11886	Box, Metal Shipping, Reusable Transporter, Steel, Maximum Load 9000 Pounds
MIL-B-17757	Boxes, Fiber Corrugated (Modular Sizes)

Table XI.(Continued)

Exterior container types and materials

Military Specifications	
MIL-B-21827	Boxes, Consolidation
MIL-C-22806	Crates, Sheathed, Wood Wirebound
MIL-C-25966	Container, Reusable; for Trailer Mounted, Air Transportable
MIL-B-26195	Box, Wood, Cleated, Skidded, Load Bearing Base
MIL-B-26241	Boxes, Demountable, Assembled with Fasteners Other than Nails and Screws
MIL-C-38226	Containers, Polyurethane, Rigid or Elastic for Packaging Small Engines
MIL-B-38721	Boxes, Consolidation, Fiberboard
MIL-C-38770	Container, Shipping and Storage, Steel, Lightweight, Reusable
MIL-B-43014	Boxes: Water-Resistant Paperboard; Folding, Set-up, and Metal-Stayed
MIL-B-43291	Boxes, Fiberboard, Corrugated, Double-Wall, Weather Resistant
MIL-B-43666	Boxes, Shipping Inserts, Consolidation
MIL-B-52508	Box, Metal, Shipping: Reusable, Transporter, Controlled Humidity, Steel, 270 Cubic Feet
MIL-C-52661	Container, Cargo
MIL-C-60182	Case, Shipping, Multi-Purpose

Table XII.

Strapping and Strapping Equipment

Federal Specifications	
QQ-S-781	Steel Strapping; Flat
QQ-S-790	Steel Strapping; Round, Bare and Zinc-Coated
PPP-S-760	Strapping, Nonmetallic (and Closure Seals)
Military Specifications	
MIL-S-17743	Stretcher, Steel Strapping, Hand
MIL-S-43104	Strapping and Sealing Kit, Hand-Operated
MIL-S-43180	Sealer, Steel Strapping, Hand, Non-Powered
MIL-S-43361	Stretching and Sealing Machine, Steel Strapping, Hand
MIL-R-43448	Reel, Strapping Coil and Trucks, Hand, Strapping Coil

Table XIII.

Cushioning Materials

Federal Specifications	
C-F-202	Felt; Sheet (Hair) and Felt Roll (Hair)
C-F-206	Felt, Sheet, Wood, Pressed
C-H-111	Hair, Animal, Curled
UU-C-201	Cardboard; Bristol, Manila, and Railroad
PPP-C-795	Cushioning Material, Cellular, Plastic Film (for Packaging Applications)
PPP-C-843	Cushioning Material, Cellulosic
PPP-C-850	Cushioning Material, Polystyrene, Expanded, Resilient (for Packaging Uses)
PPP-C-1120	Cushioning Material, Uncompressed Bound Fiber, for Packaging
PPP-E-911	Excelsior, Wood, Fabricated Pads and Bulk Form
PPP-F-320	Fiberboard; Corrugated and Solid Sheet Stock (Container Grade) and Cut Shapes

Table XIII. (Continued)

PPP-P-115	Pads, Paper, Macerated
PPP-P-291	Paperboard, Wrapping, Cushioning
Military Specifications	
MIL-F-2312	Felt, Cattlehair or Wool: Mildew Resistant and Moisture Resistant
MIL-B-3106	Board; Composition, Water Resistant Solid (for Filter or Cushioning Pads)
MIL-C-3133	Cellular Elastomeric Materials, Fabricated Parts
MIL-R-5001	Rubber, Latex Foam Sponge
MIL-R-6130	Rubber; Sheets and Molded Shapes, Cellular, Chemically Blown, For Aircraft Applications
MIL-II-9884	Honeycomb, Material, Cushioning, Paper
MIL-P-26514	Polyurethane Foam, Rigid or Elastic for Packaging
MIL-F-17057	Felt Sheet, Wool, Compound Impregnated, Chock Padding
MIL-C-17435	Cushioning Material; Fibrous Glass
MIL-P-19644	Plastic Foam Molded Polystyrene (Expanded Bead Type)
MIL-R-20092	Rubber Sheets and Molded Shapes Cellular, Synthetic, Exploded Cell (Foamed Latex)
MIL-C-23734	Cushioning Material, Cellulosic, Treated, Free Flow, Tubular
Military Specifications	
MIL-C-26296	Cushioning Material Packaging, Synthetic Fibers
MIL-P-26514	Polyurethane Foam, Rigid or Elastic, for Packaging
MIL-C-26861	Cushioning Material Resilient Type, General
MIL-F-26862	Fiberboard, Solid, Noncorrosive, Fungi-Resistant for Interior Blocking Applications
MIL-C-40010	Cushioning Material, Packaging, Polyvinyl Chloride, Plasticized, Cellular
MIL-C-46842	Cushioning Material, Unicellular Polyethylene Foam (for Packaging Purposes)
MIL-C-81823	Cushioning Material, Sheet Form, Low Density, Unicellular, Polypropylene Foam
MIL-F-81334	Foam, Plastic, Flexible, Open Cell, Polyester Type, Polyurethane

The choice of shipping container is usually stated in specifications, directives, technical orders, or other authorized publications. When a particular container is not specified or a choice of containers is authorized, the selection of an appropriate container must be made on the following criteria (Ref. 9).

(a) Initial cost of the container.

(b) Weight and cut of the container.

(c) Simplicity, economy and east of assembly and closure.

(d) Availability of the container.

(e) Need for reusability of the container.

9.9.1 Line items. Intermediate packages of the same line item may be packed together and identified before being placed in a multipack container.

9.9.1.1 Overseas shipment. Multipack containers for overseas shipment shall meet the requirements as specified for exterior containers. Commercial type containers may be used for overseas air shipment.

9.9.1.2 Domestic shipment. Multipack containers for domestic shipment shall be lightweight economical containers capable of making single-trip shipments without damage to the enclosed packages. A cover shall be fastened to the container to prevent theft or loss of enclosed packages. Commercial type containers may be used.

9.9.2 Weight limitations. Shipping containers with a gross weight of 200 pounds or over shall be provided with skids of sufficient size and attached in such a manner as to permit the use of lifting devices and material handling equipment. Where boxes and crates conform to Federal or Military specification requirements, the skids shall be as specified. In addition to specification requirements, four-way entry shall be provided for material handling equipment on containers 60 inches or more in length or width. Load-bearing members shall be provided in areas subject to contact with listing devices.

9.9.3 Consolidation. Consolidation of packaged items may be accomplished by placing these packs into containers or onto pallets. MIL-STD-147 (Ref. 9) gives the procedures for palletizing and containerizing unit loads for shipments of Department of Defense material.

9.9.3.1 Containerization. All exterior packs of 1.5 cubic feet or less, having nor single dimension exceeding 40 inches, may be consolidated in containers conforming to MIL-B-43666 when the total number of such packs in any individual shipment exceeds 25. The advantages of containerization are a reduction of number of units and documentation and additional protection to the packs.

9.9.3.2 Palletization. Palletization is the placing of a number of packages on a low, portable platform of wood, metal, fiberboard, or a combination of these materials. The limitations and types of palletized loads are defined in MIL-STD-147.

9.9.4 Dangerous items. Items that contain radioactive material of dangerous concentration, items that may undergo spontaneous combustion, and other dangerous items shall be packed in accordance with Department of Transportation regulations.

9.9.4.1 Shipment by military air. Dangerous materials required to be shipped by military air or delivered to an airport of embarkation for shipment by military air shall be prepared for shipment according to provisions of AFM 71-4, DSAM 4145.3, TM 38-250, NAVSUP Publication 505, MCO P4030.19, Packaging and Handling of Dangerous Materials for Transportation by Military Aircraft.

9.9.4.2 Shipment other than by military air. Dangerous materials required to be shipped by a mode of transportation other than military air shall be prepared for shipment according to applicable CAB, Department of Transportation, or State Regulations in effect at the time of shipment. Shipments by parcel post must comply with Postal Regulations.

9.10 Physical protection.

9.10.1 Blocking and bracing. Intermediate packages which do not completely fill the shipping container should be immobilized within the container. The choice of materials used for blocking and bracing vary widely, depending on the weight and size of the package as described in Section 9.5.1.

9.10.2 Cushioning. The selection of cushioning used in the shipping container will depend on several factors. The characteristics of the cushioning material, the nature of the containers, the destination of the pack, and the means of transportation must all be taken into consideration.

When an intermediate package is to be packed for shipment, the package may be floated in cushioning and placed into an exterior container. In this method, the noncorrosiveness and moisture content of the cushioning

materials are not critical. The use of absorbent cushioning materials should be determined by the following:

(a) When both the intermediate package container and the exterior container are water-resistant, the cushioning material may be placed between the two containers.

(b) When either container is not water-resistant, the cushioning material should be wrapped in water-resistant barrier material. An alternative method is to provide the intermediate package with a sealed water-resisant wrap and the exterior container with a sealed liner, and place the cushioning material between the two barriers.

9.11 Environmental protection. The shipping container must provide protection to the packed items from effects of exposure. This protection may be afforded by the use of water-resistant shipping containers and waterproof barrier materials. MIL-SPEC-L-10547 covers the fabricating, seam sealing, and creasing of new flexible water-vaporproof and waterproof case liners, overwraps, and plastic bag liners.

Special environmental protective measures may be needed for shipping containers. These may include humidity control, temperature control, pressurizing systems, protection from ignition or detonation by electrostatic discharge, and protections against field forces. MIL-STD-648 provides general design criteria for shipping containers including coverage of special environmental protective meausres (Ref. 5).

9.12 Container closure. Fasteners, closures, and strapping are used in packing to close containers, to secure items within containers, to secure shipping containers to skids and pallets, and to fabricate containers. Fastening and closing devices for containers are used in the following manner (Refs. 7,9):

(a) Wirebound wood boxes: All styles are closed by joining the ends of the binding wire, and may be reinforced with strapping.

(b) Wood-cleated plywood boxes: Nailed.

(c) Nailed and lock-corner wood boxes: Nailed and strapped.

(d) Wood boxes: Strapped for overseas.

(e) Wood crates: Nailed and bolted construction. Assembled with straps.

(f) Lumber and plywood sheathed crates: Nailed and bolted.

(g) Wood-cleated fiberboard boxes: Strapped.

(h) Fiber boxes: Strapped for overseas.

(i) Triple wall corrugated fiberboard boxes: Closed and fastened with tapes and adhesives.

(j) Metal cans: Closures such as screw or lug caps, friction tops, hermetic seals, or slip covers depending on contents. Cans with screw or lug caps or friction tops may be reusable.

(k) Pails: Friction tops, slip covers, and lug or bolt rings.

(l) Steel shipping containers: Lug-type locking rings.

Exterior containers shall be free of protruding staples, screws, nails, and other fastening agents. Containers shall be strapped prior to shipment in accordance with the appendix of the applicable container specification. Exterior containers for domestic shipment with net weight of 100 pounds or less shall not be strapped, unless so specified by the applicable container specification.

9.13 Marking. Unless otherwise specified, exterior shipping containers shall be marked in accordance with MIL-STD-129. All marking should be complete, accurate, and legible. When an intermediate container is used also as an exterior shipping container, the marking applicable to shipping containers as specified in MIL-STD-129 shall be used instead of package markings. Identification is not required on wraps placed in snug containers where identification is on the container. Pertinent precautionary markings necessary for full protection of the packed item shall be prominently located as specified in MIL-STD-129.

9.13.1 Labels. Paper labels may be used to apply identification and special markings to shipping containers. The size and securing of the labels shall be in accordance with MIL-STD-129.

9.13.2 Tamperproof-decals or labels. Labels or decals, used for tamperproofing procedures, shall have high-tack, pressure-sensitive adhesive and low tensile strength backing material, so that the applied tamperproof labels or decals may not be removed without delamination or destruction (Ref. 6).

9.13.3 Shipping tags. When required, shipping tags for exterior containers shall be in accordance with FED-SPEC-UU-T-81. Type A tags are used when maximum pernamency and durability is required. Type B, Class 1 tags for domestic use while Type B, Class 2 tags are for tropical or high humidity use.

9.14 Quality Control. The selection of samples shall be performed in accordance with MIL-P-116.

9.14.1 Markings. The shipping containers selected as samples shall be inspected with respect to marking and labeling. The materials, methods, sizes, application and location of markings on the shipping containers shall be inspected. Inadequate or faulty marking shall be reason for rejection. Rejected items may be reinspected when corrections have been made.

9.14.2 Design adequacy.

9.14.2.1 Rough handling tests. If required, rough handling tests shall be performed on the completed packages packed as for shipment and shall precede applicable leakage tests specified in MIL-P-116. The rough handling tests shall be made in accordance with the applicable test methods specified in Federal Test Method Standard No. 101.

Unless a specific test is specified, selection of tests shall be based on the weight and dimension of the completed package as designated in MIL-P-116.

Examination and tests for leaks in barrier materials, seals and closures as indicated in Table III of MIL-P-116 shall be performed on the contained package or packages following the rough handling tests to determine existence or extent of detrimental effects.

9.14.2.2 Cyclic exposure tests. When required, the cyclic exposure test shall be performed on the completed packages packed as for shipment. The test specimens shall be subjected to Test A or Test B as specified in MIL-P-116 before final acceptance. Cyclic exposure tests shall precede any applicable leakage tests.

THIS PAGE LEFT INTENTIONALLY BLANK

SECTION 10

APPLICABLE DOCUMENTS

10.1 Scope. This section provides a listing of the primary documents which are considered essential for the establishment of a contamination control program which will provide logistic protection for precision cleaned material.

These documents may be supplemented by future revisions and other sources resulting from research and development.

10.1.1 Environmental control.

FED-STD-209	Clean Room and Work Station Requirements, Controlled Environment.
MIL-STD-1246	Degree of Cleanliness and Clean-Room Requirements.
MSFC-STD-246	Design and Operational Criteria, Controlled Environment Areas.
T.O. 00-25-203	Standards and Guidelines for the Design and Operation of Clean Rooms and Clean Work Stations.

10.1.2 Materials.

PPP-T-45	Tape, Gummed, Paper, Reinforced.
L-P-378	Plastic Film (Polyethylene Thin Gauge).
FED-STD-101	Preservation, Packaging, and Packing Materials, Test Procedures.
UU-T-81	Tags, Shipping and Stock.
PP-T-97	Tape; Pressure-Sensitive Adhesive, Filament Reinforced.
PPP-T-66	Tape; Pressure-Sensitive Adhesive; Vinyl Plastic Film.
MIL-STD-147	Materials Handling Equipment.
MIL-H-5606	Hydraulic Fluid, Petroleum Base, Aircraft and Ordnance.

BB-N-411	Nitrogen, Technical Description.
MIL-STD-20003	Indicator, Humidity, Card, Three-Spot, (Impregnated Areas Cobaltous Chloride).
MIL-I-26860	Indicator, Humidity, Plug, Color Change.
MIL-B-2219	Barrier Materials, Transparent, Flexible, Heat Sealable.
MIL-B-131	Barrier Material, water Vapor Proof Flexible, Heat Sealable.
MIL-D-3464	Desiccants, Activated, Bagged, Packaging Use and Static Dehumidification.
MIL-D-3716	Desiccants, Activated for Dynamic Dehumidification.
MIL-L-10547	Liners, Case, and Sheet, Overwrap; Water-Vaporproof or Waterproof, Flexible.
MSFC-SPEC-237	Solvent, "Freon", Precision Cleaning Agent.
MSFC-SPEC-234	Nitrogen-Space Vehicle Grade.
MSFC-SPEC-456A	Film, Transparent, Plastic, LOX Compatible, Gas and Contamination Barriers.
MSFC-SPEC-456	LOX Compatible Film.
MSFC-SPEC-124	Tape, Pressure-Sensitive Adhesive for Preservation and Sealing.
MSC-SPEC-C-14	Spacecraft Fluid Analysis.
MSC-SPEC-C-25	Precision Packaging Materials Cleanliness.

10.1.3 Methods.

FED-STD-102B	Preservation, Packaging and Packing Levels.
DSAM 4145.2 Vol. 2	Preservation, Packaging, and Packing of Military Supplies and Equipment, Packing (Vol. II).

DSAM 4145.1	Storage and Materials Handling.
MIL-STD-1186	Cushioning, Anchoring, Bracing, Blocking, and Waterproofing with Appropriate Test Methods.
MIL-P-116	Methods of Preservation.
MIL-STD-726	Packaging Requirements Code.
MIL-STD-794	Parts and Equipment, Procedures for Packaging and Packing Of.
MSFC-PROC-151	Contamination Control and Environment Protection of Space Launch Vehicles and Associated Equipment.
MSFC-STD-343/3	Electronic Parts and Components, Protection, Handling, and Packaging Of.
MSFC-STD-343	NASA/MSFC Standard Preservation, Packaging, Packing, Handling and Shipping of Space Vehicle Supplies and Associated Equipment.
MSC-PROC-C-100	Packaging of Precision Cleaned Parts/ Components.
MSC-SPEC-C-12A	Precision Clean Packaging.
AMCP-706-121	Packaging and Pack Engineering.
NAS 853	Field Force, Protection For.
NAS 850	General Packaging Standard.
NAS 850	General Packaging Standard.
NAS 3447	Precision Cleaned Items, Contamination Barrier For.

10.1.4 Systems Cleanliness.

MIL-STD-454	Standard General Requirements for Electronic Equipment.
MIL-P-81559	Preservation and Packaging Procedures for Gyroscope Assemblies, Altitude and Directional Reference Instructions for Aircraft.

MSFC-PROC-195	Cleanliness Level Requirements and Inspection Methods for Determining Cleanliness Level of Gas Bearing Gas Supply and Slosh Measuring Systems, Procedure For.
MSFC-106	Testing Compatibility of Materials for Liquid Oxygen Systems.
MSFC-10419906	Cleanliness Levels, Cleaning and Inspection Procedures for Component Parts of Gas Bearing and Slosh Measuring Systems.
MSFC-PROC-10M01671	Cleanliness Levels, Cleaning, Protection, and Inspection Procedures for Parts, Field Parts, Assemblies, Subsystems, and Systems for Pneumatic Use in Support Equipment.
KSC-C-123	Cleanliness Levels, Cleaning, Protection, and Inspection Procedures for Parts, Field Parts, Assemblies, Subsystems, and Systems for Fluid Use in Support Equipment.
A10509302 (Ordnance)	Packaging and Packing of Parts, Repair Parts, and Components for Space Vehicles.

10.1.5 Identification.

FED-STD-123	Marking for Domestic Shipment.
MIL-STD-129	Marking for Shipment and Storage.
MIL-STD-130	Identification Marking of U. S. Military Property.
MSC-SPEC-C-3A	Decals, Certification of Cleanliness.

10.1.6 Quality Control.

ARP 575	Procedure and Method Evaluation of Filter Patch Testing for Aircraft Hydraulic Pumps.
ARP 788	Procedure for Determination of Silting Index of a Fluid.

ARP 743	Procedure for the Determination of Particulate Contamination in Dust Controlled Spaces by the Particle Count Method.
ARP 785	Procedure for the Determination of Particulate Contamination in Hydraulic Fluids by the Control Filter Gravimetric Procedure.
ARP 598	Procedure for the Determination of Particulate Contamination of Hydraulic Fluids by the Particle Count Method.
ASTM-D-2390	Microscopic Sizing and Counting Particles from Aerospace Fluids on Membrane Filters.
ASTM-D-2391	Processing Aerospace Fluid Samples for Particulate Contamination Analysis Using Membrane Filters, Test For.
ASTM-D-2429	Sampling Aerospace Fluids from Components.
ASTM-D-2544	Pressurant Gas Sampling for Gaseous Analysis.
ASTM-D-2109-64	Tests for Nonvolatile Matter in Halogenated Organic Solvents and their Admixtures.
ASTM-F-24	Measuring and Counting Particulate Contamination on Surfaces.
ASTM-F-25	Tentative Method for Sizing and Counting Airbrone Particulate Contamination in Clean Rooms and Other Dust Controlled Areas Designed for Electronic and Similar Applications.
ASTM F51-68	Sizing and Counting Particulate Contaminant in and on Clean Room Garments.

10.1.7 Miscellaneous.

FED-STD-75	Glossary of Packaging Terms.
MIL-STD-210	Climatic Extremes for Military Equipment.

MIL-STD-648	General Design Criteria for Systems Shipping Containers.
MIL-S-4461	Sealing Machines, Heat, Bench, and Portable.

IDENTIFICATION OF INTEREST IN DOCUMENT

Custodians:

Army - M1
Navy - AS
Air Force - 84

Civilian Agencies

NASA - MSFC, KSC, MSC, GSFC
DOT - FAA
GSA -

Review Activities:

Army - EL, MR, MU, WC
AT, AV, ME
Navy - SA, SH
Air Force - 11, 12, 13, 15,
16, 17, 19, 43, 79

Preparing Activity
Army - M1

Project Number
3694-0028

User Activity

Army -
Navy -
Air Force -

Defense Supply Agency

GS, PS, ES

SPECIFICATION ANALYSIS SHEET

Form Approved
Budget Bureau No. 22-R255

INSTRUCTIONS: This sheet is to be filled out by personnel, either Government or contractor, involved in the use of the specification in procurement of products for ultimate use by the Department of Defense. This sheet is provided for obtaining information on the use of this specification which will insure that suitable products can be procured with a minimum amount of delay and at the least cost. Comments and the return of this form will be appreciated. Fold on lines on reverse side, staple in corner, and send to preparing activity. Comments and suggestions submitted on this form do not constitute or imply authorization to waive any portion of the referenced document(s) or serve to amend contractual requirements.

SPECIFICATION

ORGANIZATION

CITY AND STATE

CONTRACT NUMBER

MATERIAL PROCURED UNDER A

☐ DIRECT GOVERNMENT CONTRACT ☐ SUBCONTRACT

1. HAS ANY PART OF THE SPECIFICATION CREATED PROBLEMS OR REQUIRED INTERPPETATION IN PROCUREMENT USE?

   A. GIVE PARAGRAPH NUMBER AND WORDING.

   B. RECOMMENDATIONS FOR CORRECTING THE DEFICIENCIES

2. COMMENTS ON ANY SPECIFICATION REQUIREMENT CONSIDERED TOO RIGID

3. IS THE SPECIFICATION RESTRICTIVE?

   ☐ YES ☐ NO (If "yes", in what way?)

4. REMARKS (Attach any pertinent data which may be of use in improving this specification. If there are additional papers, attach to form and place both in an envelope addressed to preparing activity)

SUBMITTED BY (Printed or typed name and activity - Optional)

DATE

DD, FORM 1 JAN 66 1426 REPLACES EDITION OF 1 OCT 64 WHICH MAY BE USED