Downloaded from http://www.everyspec.com

MIL-HDBK-273(AS)
30 DECEMBER 1983

MILITARY HANDBOOK

SURVIVABILITY ENHANCEMENT, AIRCRAFT, NUCLEAR WEAPON THREAT, DESIGN AND EVALUATION GUIDELINES

FSC 15GP

Downloaded from http://www.everyspec.com

DEPARTMENT OF THE NAVY
NAVAL AIR SYSTEMS COMMAND
WASHINGTON, D.C. 20361

Survivability Enhancement, Aircraft, Nuclear Weapon Threat, Design and Evaluation Guidelines

MIL-HDBK-273(AS)

1. This Military Handbook is approved for use by the Naval Air Systems Command, Department of the navy.

2. Beneficial comments (recommendations, additions, deletions) and any pertinent data which may be of use. in improving this document should be addressed to: Commanding Officer, Naval Air Engineering Center, Engineering Specifications and Standards Department (ESSD) Code 93, Lakehurst, NJ 08733 by using the self addressed Standardization Document Improvement Proposal (DD Form 1426) appearing at the end of this document or by letter.

Downloaded from http://www.everyspec.com

FOREW0RD

One of the elements of design which significantly contributes to effectiveness and availability of military aircraft Mission-Essential Weapons Systems (MEWS) is the extent to which combat survivability considerations are embodied in the earliest acquisition phases and subsequently regarded throughout the development and operational phases of MEWS. The steadily mounting costs of MEWS and the essentiality of realizing high force readiness and operational effectiveness require utmost attention be given to combat survivability. The capability of MEWS to survive the nuclear threat environment depends on the accuracy with which the expected threat is predicted and the deliberateness with which combat survivability, as a design and evaluation discipline, is Implemented to meet this threat. Each component of every subsystem of MEWS must receive a dedicated survivability consideration to ensure that an integrated weapon system of the highest combat survivability is indeed achieved at an acceptable level in cost and performance. Significant advances in survivability enhancement technologies and evaluation methodologies have been made which provide the potential to substantially (and efficiently) enhance the survivability of existing and future MEWS.

Since design techniques which are useful in hardening against one particular threat mechanism or effects may also be useful in hardening against another threat mechanism, it is recommended that the design guidelines for all threat mechanisms or effects be examined for the subsystem under consideration.

This handbook has been prepared in recognition of the need by the Navy and aircraft designers for uniform guidelines in design techniques and evaluation methodologies to be used in the process of enhancing the combat survivability of aircraft MEWS. Since combat survivability is a dynamic design discipline, this handbook will require periodic update to reflect state of the art Improvements in design and evaluation techniques and to maintain and enhance its serviceability. Comments and recommendations from users of this handbook are solicited.

Because some nuclear damage mechanisms can have similar effects on aircraft subsystems, the complex interdisciplinary nature of modern aircraft subsystems, and the fact that these effects can cause secondary or synergistic effects upon the subsystem, it is recommended that the user of this handbook study the entire document before proceeding with any design efforts.

Downloaded from http://www.everyspec.com

CONTENTS

Paragraph		Page
1	SCOPE	1
1.1	General	1
1.2	Application	1
1.2.1	New MEWS programs	1
1.2.2	Existing MEWS programs	1
1.3	Implementation	1
2.	REFERENCED DOCUMENTS	2
2.1	Issues of documents	2
2.2	Other publications	5
3.	DEFINITIONS	11
3.1	Definitions of key terms	11
3.1.1	Survivability	11
3.1.2	Vulnerability	11
3.1.3	Vulnerability reduction	11
3.1.4	Survivability enhancement	11
3.1.5	Survivability evaluation	11
3.1.6	Mission - Essential weapon systems (MEWS)	11
3.1.7	Threats	11
3.1.7.1	Threat mechanisms	11
3.1.7.2	Nuclear weapon	11
3.2	Definitions of acronyms and abbreviations used in this handbook	11
4.	NUCLEAR WEAPON EFFECTS AND BURST TYPES	15
4.1	General	15
4.2	Nuclear weapon effects	15
4.2.1	Blast and shock	16
4.2.1.1	Overpressure damage	16
4.2.1.2	Gust damage	16
4.2.1.3	Shock	17
4.2.1.3.1	Ground shock	17
4.2.1.3.2	Underwater shock	17
4.2.2	Thermal radiation	17
4.2.2.1	Fireball temperature	17
4.2.2.2	Energy quantity	18
4.2.2.3	Thermal pulse shape and duration	18
4.2.2.4	Material temperature increase	19
4.2.2.5	Rate of temperature increase	19
4.2.2.6	General effects on materials	19

Downloaded from http://www.everyspec.com

CONTENTS Continued

Paragraph		Page
4.2.2.7	General skin and eye effects	20
4.2.3	Initial radiation	20
4.2.4	Residual radiation	20
4.2.5	Flash	20
4.2.6	Electromagnetic pulse	20
4.2.6.1	High altitude EMP	21
4.2.6.2	Low altitude EMP	21
4.2.7	Ejecta, dust, and debris	21
4.2.8	Afterwinds	21
4.2.9	Fallout	22
4.2.9.1	Decontamination	22
4.2.10	Blackout	22
4.3	Nuclear weapons burst types	23
4.3.1	High altitude burst	23
4.3.2	Air burst	23
4.3.3	Ground surface burst	24
4.3.4	Shallow underground burst	24
4.3.5	Water surface burst	25
4.3.6	Shallow underwater burst	25
4.3.7	Confined subsurface burst	25
4.4	Distribution of energy	26
4.4.1	Nuclear radiations	27
4.4.2	Initial nuclear radiation	27
4.4.3	Residual nuclear radiation	27
4.4.4	Delayed nuclear radiation	27
4.5	Chronology of events	27
5.	SYSTEM RESPONSES	29
5.1	Principal effects	29
5.2	Blast	29
5.2.1	Gust loading	29
5.2.2	Blast effects on parked aircraft	30
5.2.2.1	Orientation	30
5.2.2.2	Revetments	30
5.2.2.3	Factors influencing damage	30
5.2.3	Blast effects on aircraft in flight	31
5.3	Thermal radiation	31
5.3.1	Thin skin and associated effects	31
5.3.2	Effects on composite materials	32
5.3.3	Effects on semitransparent materials	32
5.3.4	Thermal radiation effects on parked aircraft	32
5.3.5	Thermal radiation effects on aircraft in flight	33

Downloaded from http://www.everyspec.com

CONTENTS Continued

Paragraph		Page
5.4	Nuclear radiation	33
5.4.1	Gamma radiation	33
5.4.2	Neutron radiation	33
5.4.3	Gamma and neutron radiation environments	34
5.5	Electromagnetic pulse	34
5.5.1	Skin currents	34
5.5.2	Coupling	34
5.5.3	Transient effects	35
6.	SURVIVABILITY DESIGN PROCESS	36
6.1	Tactics and countermeasures	36
6.2	Vulnerability evaluation	36
6.3	Vulnerability and survivability relationship	36
6.4	Hardening rationale	36
6.5	Balanced survivability enhancement tradeoff evaluation	37
6.6	MEWS-threat data format	40
6.7	Threat environment specification guidelines	41
6.7.1	Blast	41
6.7.2	Thermal radiation	41
6.7.3	Nuclear radiation	42
6.7.3.1	Neutrons	42
6.7.3.2	Gamma rays	42
6.7.3.3	X-rays	42
6.7.4	Electromagnetic pulse	43
6.7.5	Crew response	43
6.8	Survivability enhancement trade-offs	43
6.8.1	Supplemental and secondary hardening benefits	43
6.8.2	Hardening penalties	44
6.8.3	Results summary format guidelines	44
6.8.4	General objective	45
6.8.5	Trade-off penalties	45
6.8.6	Penalty limits	45
6.8.7	Payload optimization	45
6.8.8	Summary considerations	45
7.	DESIGN GUIDELINES	47
7.1	General	47
7.1.1	Structures	47
7.1.1.1	Aircraft design state	47

Downloaded from http://www.everyspec.com

CONTENTS Continued

Paragraph		Page
7.1.1.2	Approach	47
7.1.1.3	Pulse duration	47
7.1.1.4	Critical loads	48
7.1.1.5	Direct and indirect load paths	48
7.1.1.6	Load transfer points	48
7.1.1.7	General structural design techniques	48
7.1.1.8	Desirable design practice	48
7.1.1.9	Undesirable design practices	50
7.1.1.10	Fatigue design guidelines	50
7.1.1.10.1	Number of wing and empennage spars	50
7.1.1.10.2	Distribution of the bending material	50
7.1.1.10.3	Type of covers	51
7.1.1.10.4	Type of major splices	51
7.1.1.10.5	Discontinuities	51
7.1.1.11	Gust effects on parked aircraft	51
7.1.1.11.1	Aircraft tie-downs	51
7.1.1.12	Fail-safe criteria	51
7.1.1.13	Performance effects	51
7.1.1.14	Aircraft life	52
7.1.1.15	Design compromise	52
7.1.1.16	Related subsystems and considerations	52
7.1.2	Hydraulic subsystem	52
7.1.2.1	Hydraulic fluid	53
7.1.2.2	System isolation	53
7.1.3	Fuel subsystem	54
7.1.3.1	Hydrodynamic ram	54
7.1.3.2	Tank location and construction	54
7.1.3.3	Fuel management	54
7.1.3.4	Fuel lines	55
7.1.4	Electrical subsystem	55
7.1.5	Flight control subsystem	56
7.1.5.1	Control rod routing	56
7.1.5.2	Power boosted systems	56
7.1.5.3	Full power systems	56
7.1.5.4	Fly-by-wire	56
7.1.6	Environmental control subsystem	56
7.1.7	Pneumatic subsystem	57
7.1.7.1	Subsystem components	57
7.1.7.2	Routing and location	58
7.1.8	Oxygen subsystem	58
7.1.9	Avionics subsystem	58
7.1.10	Liquid cooled avionics	58
7.1.11	Fire extinguishment subsystem	58

Downloaded from http://www.everyspec.com

CONTENTS Continued

Paragraph		Page
7.1.12	Aircrew escape subsystem	59
7.1.13	Landing gear subsystem	59
7.1.14	Arresting gear	59
7.1.15	Catapult launch hook	59
7.1.16	Propulsion subsystem	59
7.1.16.1	Design integration	59
7.1.16.2	Sensors	60
7.1.16.3	Actuation devices	60
7.1.16.4	Other duct effects	60
7.1.17	Radar absorbent material	60
7.1.18	Optical fiber designs	60
7.1.19	External antennas	60
7.1.20	External stores attachments	61
7.1.21	Synergistic effects	61
7.2	Thermal hardening	61
7.2.1	Structures	61
7.2.1.1	Thermal flux variation	61
7.2.1.2	Initial temperature	62
7.2.1.3	Absorbance reduction	62
7.2.1.4	Weight penalty	62
7.2.1.5	Composites	63
7.2.1.5.1	Skin and structure junctures	63
7.2.1.5.2	Fibrous composites	63
7.2.1.5.3	Sandwich and honeycomb materials	63
7.2.1.5.3.1	Thermal properties	63
7.2.1.5.4	Radomes	63
7.2.1.5.5	Semitransparent materials	63
7.2.1.6	Coating quality control	64
7.2.2	Liquid containing subsystems	64
7.2.2.1	Fuel subsystem	64
7.2.2.2	Fuel management	64
7.2.3	Electrical subsystem	64
7.2.4	Flight control subsystem	65
7.2.5	Pneumatic subsystem	65
7.2.6	Avionics subsystem	65
7.2.7	Aircrew escape subsystem	65
7.2.8	Aircrew habitations	65
7.2.8.1	Survival equipment	65
7.2.9	Oxygen subsystem	66
7.2.10	Landing gear subsystem	66
7.2.10.1	Arresting hook subsystem	66
7.2.11	Radar absorbent material	66
7.2.12	Canopy seals	66
7.2.13	RF gaskets	66
7.2.14	Radomes	67

Downloaded from http://www.everyspec.com

CONTENTS Continued

Paragraph		Page
7.2.15	Aircrew	67
7.2.15.1	Skin burns	67
7.2.15.1.1	Skin burn types	67
7.2.15.1.2	Skin burn classification	67
7.2.15.1.3	Energy required to produce skin burns	68
7.2.15.2	Aircrew protection	68
7.2.16	Helicopter rotor hubs	69
7.2.17	Helicopter blades	69
7.2.18	Electro-optical and IR sensors	69
7.2.19	Signature reduction coatings	69
7.2.20	Thermal insulation	70
7.3	Nuclear radiations	70
7.3.1	General characteristics	70
7.3.1.1	General TREE characteristics	70
7.3.1.2	Equipments affected	70
7.3.1.3	Types of effects	70
7.3.2	Avionics subsystem	71
7.3.2.1	Solid-state devices	71
7.3.2.1.1	Atomic displacement effects	71
7.3.2.1.2	Fast-neutron fluence effects	71
7.3.2.1.3	Gamma radiation effects	71
7.3.2.2	Intrinsic hardening	72
7.3.2.3	Recovery time	72
7.3.2.4	Burnout	72
7.3.2.5	Transistor minimum beta	72
7.3.2.6	Gamma dose rate	72
7.3.2.6.1	Circuit response	73
7.3.2.6.2	Component selection criteria	73
7.3.2.6.2.1	Diodes	73
7.3.2.6.2.2	Transistors	73
7.3.2.6.2.3	Integrated circuits	74
7.3.2.6.2.4	Unijunction transistors	74
7.3.2.6.2.5	Silicon-controlled rectifiers	74
7.3.2.6.2.6	Purchased subassemblies	74
7.3.2.6.2.7	Special electronic devices	75
7.3.2.6.2.8	Preferred parts list	75
7.3.2.7	Neutron fluence	75
7.3.2.7.1	Component selection criteria	75
7.3.2.7.1.1	Diodes	75
7.3.2.7.1.2	Transistors	75
7.3.2.7.1.3	Integrated circuits	76
7.3.2.7.1.4	Silicon-controlled rectifiers	76
7.3.2.7.1.5	Field-effect transistors	76
7.3.2.7.1.6	Hybrids and special subassemblies	76

Downloaded from http://www.everyspec.com

CONTENTS Continued

Paragraph		Page
7.3.2.7.1.7	Special components	77
7.3.2.7.1.8	Preferred parts list	77
7.3.2.8	Total ionizing dose	77
7.3.2.8.1	Component selection criteria	77
7.3.2.9	Vacuum tubes	78
7.3.2.9.1	Thyratrons	79
7.3.2.10	Capacitors	79
7.3.2.11	Resistors	79
7.3.2.12	Cables and wiring	79
7.3.2.12.1	Temporary and permanent effects	80
7.3.2.13	Batteries	80
7.3.3	Fuel subsystem	81
7.3.4	Flight control subsystem	81
7.3.5	Hydraulic subsystem	81
7.3.6	Pneumatic subsystem	81
7.3.7	Electrical subsystem	82
7.3.8	Environmental control subsystem	82
7.3.9	Refueling probe	82
7.3.10	Aircrew	82
7.3.11	Inherent shielding	83
7.3.12	Interaction of gamma rays with matter	83
7.3.13	Interaction of neutrons with matter	84
7.3.14	The disposition of contaminated surviving aircraft	85
7.3.14.1	Contamination	85
7.3.14.1.1	Debris/fallout	85
7.3.14.1.2	Neutron-induced radioactivity	86
7.3.14.2	Radiation hazards	86
7.3.14.2.1	Decontamination	87
7.4	Electromagnetic pulse	87
7.4.1	General phenomena and effects description	87
7.4.1.1	Modes of entry	88
7.4.1.2	Energy collection	89
7.4.1.3	Energy coupling	89
7.4.1.3.1	Reflected energy	89
7.4.1.4	Focusing effect	90
7.4.1.5	System generated EMP	90
7.4.1.5.1	Systems affected	90
7.4.1.5.2	Effects on systems	90
7.4.2	Avionics and electrical subsystems	91
7.4.2.1	General design approach	91
7.4.2.1.1	Protective devices and techniques	91
7.4.2.1.2	Circuit layout	91

Downloaded from http://www.everyspec.com

CONTENTS Continued

Paragraph		Page
7.4.2.1.3	Grounding practices	92
7.4.2.1.4	Voltage limiting	92
7.4.2.2	General guidelines	92
7.4.2.2.1	Aircraft	92
7.4.2.2.2	Missiles	93
7.4.2.2.2.1	Wiring techniques	93
7.4.2.2.2.2	Shielding	93
7.4.2.2.2.3	Compartmentalization	94
7.4.2.2.2.4	Filtering	94
7.4.2.2.3	Electromagnetic effects overlap	94
7.4.2.3	System design practices	95
7.4.2.4	Installation practices	96
7.4.2.5	Subsystem circuit design practices	97
7.4.2.6	Subsystem monitoring practices	98
7.4.2.7	Equipment classification	99
7.4.2.8	Equipment susceptibility	100
7.4.2.9	Component susceptibility and sensitivity	102
7.4.2.9.1	Component failure modes	102
7.4.2.9.2	Component selection	102
7.4.2.9.3	Parts control for semiconductors	103
7.4.2.10	Network hardening	103
7.4.2.10.1	Circuit design	104
7.4.2.10.1.1	Bias levels and bias resistors	105
7.4.2.10.1.2	Microwave detectors	105
7.4.2.10.1.3	Receiver and intermediate frequency (IF) amplifier input circuits	105
7.4.2.10.1.4	Sensitive special detectors	106
7.4.2.10.1.5	Grounding	107
7.4.2.10.2	Hardening techniques	108
7.4.2.10.2.1	Common mode rejection	108
7.4.2.10.2.2	Signal integration or delay networks	110
7.4.2.10.2.3	Low-impedance voltage devices	110
7.4.2.10.2.4	Specification controls	111
7.4.2.10.2.5	Logic levels	111
7.4.2.10.2.6	Circuit organization	111
7.4.2.10.2.7	Circumvention	112
7.4.2.11	Electrical bonding	113
7.4.2.11.1	Bonding impedance	113
7.4.2.11.2	Bond straps and gaskets	114
7.4.2.11.3	Corrosion	114
7.4.2.11.4	Joining methods	115
7.4.2.11.5	Cleaning of surfaces	116
7.4.2.11.6	Protective finishes	117
7.4.2.11.7	Bonding summary	117
7.4.2.12	Functional hardening	118

Downloaded from http://www.everyspec.com

CONTENTS Continued

Paragraph		Page
7.4.2.13	Operational hardening	118
7.4.2.14	Electromagnetic shields	118
7.4.2.14.1	General guidelines	118
7.4.2.14.2	Direct field penetration	119
7.4.2.14.3	Welding	119
7.4.2.14.4	Shielded enclosures and cables	119
7.4.2.14.4.1	Cable shielding effectiveness	120
7.4.2.14.5	Vehicles	120
7.4.2.14.5.1	Outside shields	120
7.4.2.14.5.2	Open shields	121
7.4.2.14.6	Braided and optical coverage	121
7.4.2.14.7	Insulation	121
7.4.2.14.8	Solid shields	121
7.4.2.15	Cables	122
7.4.2.15.1	Design and control of wires and cables	123
7.4.2.15.1.1	Wiring types and methods	123
7.4.2.15.1.2	Wire layout	123
7.4.2.15.1.3	Wire and cable variability	124
7.4.2.16	Connectors	124
7.4.2.17	Access doors	124
7.4.2.18	Gaskets and seals	125
7.4.2.19	Filters	125
7.4.2.19.1	Characteristics	127
7.4.2.19.2	Filter application	127
7.4.2.20	Transformers, chokes, and coils	128
7.4.2.21	Surge protection devices	129
7.4.2.21.1	Spark gaps	130
7.4.2.21.2	Gas diodes	131
7.4.2.21.3	Zener diodes and other semiconductor devices	131
7.4.2.22	Current-limiting resistor	132
7.4.2.23	Disconnects	133
7.4.2.24	Protective hybrids	133
7.4.2.25	Attenuation characteristics of hardening techniques	133
7.4.2.26	Effectiveness of hardness approaches	134
7.4.2.26.1	One-point ground	134
7.4.2.26.2	Total shielded twisted pair concept	134
7.4.2.26.3	Separation of noise source circuitry	135
7.4.2.26.4	Total exterior shield	135
7.4.2.26.5	Compartmentalized and filtered sensitive circuits	135

Downloaded from http://www.everyspec.com

CONTENTS Continued

Paragraph		Page
7.4.2.27	Hardening trade-offs	135
7.4.2.28	Construction techniques	136
7.4.2.29	Power circuits	136
7.4.2.30	Plume effects	136
7.4.2.31	EMP retrofit	137
7.4.2.32	EMP effect uncertainties	137
7.4.3	Optical systems	137
7.4.4	Anti-icing subsystems	138
7.4.5	Fire extinguishing subsystems	138
7.4.6	Crew escape subsystem	138
7.4.7	Fuel subsystem	138
7.4.8	Propulsion subsystem	139
7.4.9	Landing and position lights	139
8.	EVALUATION GUIDELINES	140
8.1	General evaluation procedure	140
8.1.1	Mission-threat evaluation	140
8.1.1.1	Mission element need statement	140
8.1.1.2	Mission requirements	141
8.1.1.3	Scenarios	141
8.1.1.4	Threat analysis	141
8.1.2	Susceptibility to detection evaluation	141
8.1.2.1	Detectable signatures	141
8.1.3	Vulnerability evaluation	141
8.1.3.1	Aircraft weapon system description	142
8.1.3.2	Failure mode and effects analysis	142
8.1.4	Survivability evaluation	142
8.2	Hardness verification	143
8.2.1	Verification by analysis	143
8.2.2	Verification by test	143
8.3	Blast	143
8.3.1	Parked aircraft	144
8.3.2	In-flight aircraft	144
8.3.3	Helicopters	144
8.3.4	Missiles and rockets	145
8.3.5	Analytical methodologies and considerations	145
8.3.5.1	General structure	145
8.3.5.1.1	Synopsis of general analytical methodologies	147
8.3.5.2	Preliminary structural response analysis	150
8.3.5.3	Blast loading analysis considerations	150
8.3.5.4	Thermal influences	151

Downloaded from http://www.everyspec.com

CONTENTS Continued

Paragraph		Page
8.3.5.4.1	Combined effects	152
8.3.6	Computer codes and methodologies available	152
8.3.7	Testing techniques	152
8.3.7.1	Shock-tube simulation	153
8.3.7.2	High-explosive charges	153
8.4	Thermal	153
8.4.1	Parked aircraft	154
8.4.2	In-flight aircraft	154
8.4.3	Helicopters	155
8.4.4	Missiles and rockets	155
8.4.5	Analytical methodologies and considerations	155
8.4.5.1	General structure	155
8.4.5.2	Initial temperatures	155
8.4.5.2.1	Aerodynamic heating	156
8.4.5.2.2	Solar flux	156
8.4.5.2.3	Radiant heat exchange	156
8.4.5.2.4	Heating from the interior	156
8.4.5.3	Initial temperature variation	156
8.4.5.4	Fireball flux variation	157
8.4.5.5	Fibrous composites	157
8.4.5.5.1	Effect of flanges	157
8.4.5.6	Skin and juncture structure	157
8.4.5.7	Sandwich materials	157
8.4.5.8	Semitransparent materials	158
8.4.5.8.1	Optical properties	158
8.4.5.8.2	Reflections from within aircraft	158
8.4.5.9	Composite semitransparent panels	158
8.4.5.10	Computer codes and methodologies available	159
8.4.6	Testing techniques	159
8.5	Radiation	160
8.5.1	Transient radiation effects on electronics	160
8.5.1.1	TREE evaluation	160
8.5.1.2	Analytical methodologies and considerations	160
8.5.1.2.1	Gamma dose rate evaluation	161
8.5.1.2.2	Neutron evaluation	161
8.5.1.2.3	Total dose evaluation	161
8.5.1.3	Testing facilities and techniques	162
8.5.1.4	Dosimetry	163
8.5.2	Aircrew	164
8.5.2.1	Tissue sensitivity	164
8.5.2.2	Dose quantification	164

Downloaded from http://www.everyspec.com

CONTENTS Continued

Paragraph		Page
8.5.2.3	Response to nuclear radiation	165
8.5.2.4	Pilot nonperfromance vulnerability criteria	165
8.5.2.5	Methodology and data	167
8.6	Electromagnetic pulse	167
8.6.1	Parked aircraft	167
8.6.2	In-flight aircraft	167
8.6.3	Methodology and considerations	168
8.6.3.1	Electromagnetic aperture penetration analysis	168
8.6.3.1.1	High-frequency aperture penetration evaluation	168
8.6.3.1.2	Low-frequency aperture penetration evaluation	168
8.6.3.1.2.1	Cockpit instrument panel evaluation	169
8.6.3.1.3	Discrete frequency aperture effects	169
8.6.3.2	Electromagnetic gap penetration evaluation	169
8.6.3.3	Current induced on cables	170
8.6.3.3.1	Preliminary estimates	170
8.6.3.3.2	Detailed calculations	170
8.6.3.3.3	Current induced on shielded cables	171
8.6.3.4	Antenna cable currents	172
8.6.3.5	Equipment susceptibility	172
8.6.3.5.1	EMP-induced damage	172
8.6.3.5.1.1	Causes of permanent damage to components	173
8.6.3.5.1.2	Susceptibility of integrated and hybrid circuits	174
8.6.3.5.1.3	Component burnout and upset data	175
8.6.4	Testing	176
8.6.4.1	Component burnout/failure tests	176
8.6.4.2	Shielding effectiveness test	177
8.6.4.2.1	Enclosure shield testing	179
8.6.4.3	Protective device EMP tests	179
8.6.4.4	Cable core current injection tests	179
8.6.4.5	System tests	180
9.	VULNERABILITY, SURVIVABILITY, AND TRADE-OFF EVALUATION	182
9.1	Vulnerability and survivability evaluations	182
9.2	Environmental evaluation	185
9.2.1	Blast environment	185
9.2.2	Thermal environment	185

Downloaded from http://www.everyspec.com

CONTENTS Continued

Paragraph		Page
9.2.3	Nuclear radiation environments	186
9.2.4	Electromagnetic pulse environment	186
9.3	Mission-essential functions and components identification	187
9.3.1	Mission completion criteria	188
9.3.2	System level functions	188
9.3.3	Subsystems	188
9.3.4	Subsystem level functions	188
9.3.5	Equipment and components	188
9.4	Vulnerability evaluation	189
9.4.1	Blast and thermal radiation	190
9.4.2	Nuclear radiation	192
9.4.3	Electromagnetic pulse	194
9.4.4	Trade-off studies	194
9.4.4.1	Select baseline and refine hardening criteria	197
9.4.4.1.1	Nuclear environment	197
9.4.4.1.2	Crew exposure to radiation	197
9.4.4.1.3	Gross penalties	197
9.4.4.1.4	Preliminary evaluations	197
9.4.4.2	Evaluate balanced hardening levels	198
9.4.4.3	Evaluate competitive hardening techniques and designs	198
9.4.4.4	Define hardening deltas	199
9.4.4.5	Define conceptual and detailed configuration design	199
9.4.4.6	Evaluate mission and cost-effectiveness	199
9.5	Nuclear-nonnuclear hardening impacts	199
9.5.1	Nuclear blast protection	200
9.5.2	TREE and EMP protection	200
9.5.3	Thermal radiation protection	200
9.5.4	IR reduction	200
9.5.5	Radar cross section reduction	203
9.5.6	Acoustic noise reduction	203
9.6	Hardness assurance	203
10.0	SUPPLEMENTAL CONSIDERATIONS	205
10.1	External stores	205
10.2	Aircraft handling and support equipment	205
10.3	Extra aircraft effects	205

Downloaded from http://www.everyspec.com

FIGURES

Page

1. Task flow diagram for conducting a survivability and vulnerability effectiveness study for nuclear threat scenarios 182

2. Task flow diagram for conducting nuclear blast and thermal radiation vulnerability analysis 190

3. Task flow diagram for conducting nuclear radiation vulnerability analysis 192

4. Task flow diagram for conducting electromagnetic pulse vulnerability analysis 194

5. Task flow diagram for conducting nuclear weapons effects trade-off studies 195

Downloaded from http://www.everyspec.com

Downloaded from http://www.everyspec.com

1. SCOPE

1.1 General. This handbook is a reference document providing uniform design and evaluation guidelines for the survivability enhancement of aircraft Mission-Essential Weapons Systems (MEWS), within or for the Naval Air Systems Command, to ensure that effective combat operations are achieved when operating in a nuclear threat environment. Those elements and design activities that are related to survivability enhancement but are derived from the degradation of threat subsystem functions (e.g., electronic warfare) or from the ways that the aircraft can be utilized in a hostile environment (e.g., tactics) are not included. The evaluation guidelines, for the purpose of achieving systematic quantification and evaluation of combat survivability, include definition of mission scenario and associated threat environment, vulnerability to threat damage mechanisms, encounter survivability, and survivability enhancement trade-offs.

1.2 Application. These guidelines are applicable to the procurement of all Navy/Marine Corps aircraft MEWS, including remotely piloted vehicles but excluding systems designated solely for research and training.

1.2.1 New MEWS programs. It is intended that this handbook be applied throughout the material acquisition process beginning with the reconciliation of alternative concepts (e.g., conceptual phase) to fill a mission need, as may be set forth in the Mission Element Need Statement (MENS), and extending through the entire life cycle of MEWS.

1.2.2 Existing MEWS programs. It is intended that this handbook be applied to MEWS which have already begun full-scale engineering development (or which are in production) and in all modernization, improvement, and retrofit programs where it appears that significant survivability enhancement can be achieved at acceptable penalties in cost, weight, and performance.

1.3 Implementation. This handbook will be used in conjunction with MEWS detail specifications and other implementing documentation (e.g., NAVMATINST 3900.16 and NAVAIRINST 3920.1) in preparing combat survivability requirements. It may be included in requests for proposals, contract statements of work, survivability program plans, and other contractual documents. It is intended that this handbook be applied in whole or in part as specified in the Implementing documentation and used as a supplement to MIL-STD-2072A(AS).

Downloaded from http://www.everyspec.com

2. REFERENCED DOCUMENTS

2.1 Issues of documents. The following documents of the issue in effect on date of invitation for bids or request for proposals form a part of this handbook to the extent specified herein.

SPECIFICATIONS

MILITARY

MIL-C-675	Coating of Glass Optical Elements (Antireflection).
MIL-C-2105	Lubricating Oil, Gear, Multi-Purpose.
MIL-M-3171	Magnesium Alloy, Processes for Pretreatment and Prevention of Corrosion on.
MIL-S-5002	Surface Treatments and Inorganic Coatings for Metal Surfaces of Weapon Systems.
MIL-W-5007	Engines, Aircraft, Turbojet and Turbofan, General Specification for.
MIL-H-5440	Hydraulic Systems, Aircraft Types I and II, Design, Installation, and Data Requirements for.
MIL-G-5485	Glass; Laminated, Flat, Bullet Resistant.
MIL-P-5518	Pneumatic Systems, Aircraft, Design, Installation, and Data Requirements for.
MIL-C-5541	Chemical Conversion Coatings on Aluminum and Aluminum Alloys.
MIL-G-83363	Grease, Transmission, Helicopter.
MIL-T-5578	Tank, Fuel, Aircraft, Self-Sealing.
MIL-G-5572	Gasoline, Aviation, Grades 80/87, 100/130, 115/145.
MIL-T-5579	Tank, Self-Sealing Oil, Aircraft.
MIL-H-5606	Hydraulic Fluid, Petroleum Base, Aircraft, Missile, and Ordnance.
MIL-T-5624	Turbine Fuel, Aviation, Grades JP-4 and JP-5.
MIL-T-5955	Transmission System, VTOL-STOL, General Requirements for.
MIL-H-7061	Hose, Rubber, Aircraft, Self-Sealing, Aromatic Fuel.
MIL-L-7808	Lubricating Oil, Aircraft Turbine Engine, Synthetic Base.
MIL-F-7872	Fire and Overheat Naming Systems, Continuous, Aircraft, Test and Installation of.
MIL-H-8501	Helicopter Flying and Ground Handling Qualities, General Requirements for.
MIL-P-8564	Pneumatic System Components, Aeronautical, General Specification for.
MI1-A-8591	Airborne Stores and Associated Suspension Lugs, and Aircraft Store Interface (Carriage Phase), General Design for.
MIL-E-8593	Engines, Aircraft, Turboprop, General Specification for.
MIL-I-8675	Installation, Aircraft Armor.
MIL-D-8683	Design and Installation of Gaseous Oxygen Systems of Aircraft.
MIL-S-8698	Structural Design Requirements, Helicopters.

Downloaded from http://www.everyspec.com

SPECIFICATIONS (Cont'd)

MILITARY (Cont'd)

MIL-I-8700	Installation and Test of Electronic Equipment in Aircraft, General Specification for.
MIL-F-8785	Flying Qualities of Piloted Airplanes.
MIL-S-8802	Sealing Compound, Temperature-Resistant, Integral Fuel Tanks and Fuel Cell Cavities, High-Adhesion.
MIL-A-8806	Acoustical Noise Level in Aircraft, General Specification for.
MIL-A-8860	Airplane Strength and Rigidity, General Specification for (Flight Loads and Ground Loads for Navy Procured Airplanes through Vibration, Flutter, and Divergence).
MIL-A-8861	Airplane Strength and Ridity, Flight Loads.
MIL-A-8863	Airplane Strength and Rigidity Ground Loads for Navy Procured Airplanes.
MIL-A-8864	Airplane Strength and Rigidity Water and Handling Loads for Sea Planes.
MIL-A-8865	Airplane Strength and Rigidity Miscellaneous Loads.
MIL-A-8866	Airplane Strength and Rigidity Reliability Requirements, Repeated Loads, and Fatigue
MIL-A-8867	Airplane Strength and Rigidity Ground Tests
MIL-A-8868	Airplane Strength and Rigidity Data and Reports
MIL-A-8869	Airplane Strength and Rigidity Special Weapons Effects.
MIL-A-8870	Airplane Strength and Rigidity Nuclear Weapons Effects.
MIL-H-8890	Hydraulic Components, Type III (65° to +450°F), General Specification for.
MIL-H-8891	Hydraulic Systems, Manned Flight Vehicles, Type III, Design, Installation, and Data Requirements for.
MIL-E-9426	Escape System, Requirements Conformance Demonstrations and Performance Tests for, General Specification for.
MIL-S-9479	Seat System, Upward Ejection, Aircraft, General Specification for.
MIL-F-9490	Flight Control Systems Design, Installation and Test of, Piloted Aircraft, General Specification for.
MIL-M-12218	Monobromotrifluoromethane (Liquefied) Technical Grade for Fire Extinguishers.
MIL-C-12369	Cloth, Ballistic, Nylon.
MIL-F-17874	Fuel Systems, Aircraft, Installation and Test of.
MIL-H-18288	Hose and Hose Assemblies, Aircraft, Self-Sealing, Aromatic Fuel.
MIL-H-18325	Heating and Ventilating Systems, Aircraft.
MIL-F-18372	Flight Control System Design, Installation and Test of, Aircraft, General Specification for.
MIL-S-18471	System, Aircrew Automated Escape, Ejection Seat Type, General Specification for.
MIL-C-18491	Curtain, Flak Protection.
MIL-E-18927	Environmental Systems, Pressurized Aircraft, General Specification for.
MIL-D-19326	Design and Installation of Liquid Oxygen Systems in Aircraft, General Specification for.
MIL-A-19879	Armor, Body, Fragmentation Protection, Lower Torso.

Downloaded from http://www.everyspec.com

SPECIFICATIONS (Cont'd)

MILITARY (Cont'd)

MIL-C-22284	Container, Aircraft Fire Extinguishing System, Bromofluoromethane, CF3BR.
MIL-C-22285	Extinguishing System, Fire, Aircraft, High Rate Discharge Type, Installation and Test of.
MIL-P-23377	Primer, Coating, Epoxy Polyamide, Chemical and Solvent Resistant.
MIL-F-23447	Fire Warning Systems, Aircraft, Radiation Sensing Type, Test and Installation of.
MIL-L-23699	Lubricating Oil, Aircraft Turbine Engines, Synthetic Base.
MIL-E-25499	Electrical System, Aircraft, Design and Installation of, General Specification for
MIL-T-25783	Tank, Fuel, Aircraft and Missile Non-Self Sealing, High Temperature.
MIL-P-26366	Propeller Systems, Aircraft, General Specification for
MIL-C-27347	Cloth, Coated, Glass, Aluminum Face, Silicon Rubber Back.
MIL-T-27422	Tank, Fuel, Crash-Resistant, Aircraft.
MIL-D-27729	Detecting System, Flame-Smoke, Aircraft and Aerospace Vehicles, General Performance, Installation and Test of.
MIL-F-38363	Fuel System, Aircraft, General Specification for.
MIL-E-38453	Environmental Control, Environmental Protection, and Engine Bleed Air Systems, Aircraft and Aircraft Launched Missiles, General Specification for.
MIL-B-43366	Body Armor, Fragmentation Protective, Groin.
MIL-S-46099	Steel, Armor Plate, Roll-Bonded, Duel Hardness.
MIL-A-46103	Armor, Lightweight, Ceramic Faced Composite, Procedure Requirements.
MIL-A-46108	Armor, Woven Glass Roving Fabrics.
MIL-A-46165	Armor, WOven Glass Roving Fabrics.
MIL-A-46166	Armor, Glass Reinforced Plastic Laminates.
MIL-S-58095	Seat System, Crashworthy, Non-Ejection, Aircrew, General Specification for.
MIL-B-81365	Bleed Air Systems, General Specification for.
MIL-H-81752	Windshield Systems, Fixed Wing Aircraft, General Specification for.
MIL-D-81980	Design and Evaluation of Signal Transmission Subsystems, General Specification for.
MIL-B-83054	Baffle and Inerting Material, Aircraft Fuel Tank.
MIL-C-83124	Cartridge Activated Devices/Propellant Actuated Devices, General Design Specification for.
MIL-C-83125	Cartridge for Cartridge/Propellant Actuated Devices, General Design Specification for.
MIL-P-83126	Propulsion System, Aircrew Escape, Design Specification for.
MIL-T-83133	Turbine Fuel, Aviation, Kerosene Type, Grade JP-8.
MIL-H-83282	Hydraulic Fluid, Fire Resistant Synthetic Hydrocarbon Base, Aircraft.

Downloaded from http://www.everyspec.com

SPECIFICATIONS (Cont'd)

MILITARY (Cont'd)

MIL-C-83286	Coating Urethane, Aliphatic Isocyanate, for Aerospace Applications.
MIL-C-83291	Covers, Self-Sealing, Fuel Line, Aircraft.
MIL-I-83294	Installation Requirement, Aircraft Propulsion Systems, General Specification for.
MIL-F-83300	Flying Qualities of Piloted V/STOL Aircraft.
MIL-G-83363	Grease, Transmission, Helicopter.

STANDARDS

MILITARY

MIL-STD-461	Electromagnetic Interference Characteristics Requirements for Equipment.
MIL-STD-462	Electromagnetic Interference Characteristics, Measurement of.
MIL-STD-889	Dissimilar Metals.
MIL-STD-1288	Aircrew Protection Requirements Nonnuclear Weapons Threat.
MIL-STD-1290	Light Fixed and Rotary-Wing Aircraft Crash worthiness.
MIL-STD-1629	Procedures for Performing a Failure Mode, Effects and Criticality Analysis.
MIL-STD-2072A(AS)	Survivability, Aircraft; Establishment and Conduct of Programs for.
MIL-STD-2089	Aircraft Nonnuclear Survivability Terms.

Copies of specifications and standards should be obtained from the DOD Single Stock Point, Commanding Officer, Naval Publications and Forms Center, 5801 Tabor Avenue, Philadelphia, PA 19120.

2.2 Other publications. The following documents form a part of this handbook to the extent specified herein. Unless otherwise Indicated, the issue in effect on date of invitation for bids or request for proposals shall apply.

Design

Chief of Naval Material, NAVMATINST 3900.16 "Combat Survivability of Naval Weapon Systems."

Naval Air Systems Command, NAVAIRINST 3920.1 "Establishment of Naval Air Survivability Program (NASP)."

Hobbs, Norman, et al, "Handbook for Analysis of Nuclear Weapons Effects on Aircraft (U)," Kaman Avidyne, DASA 2048, Defense Atomic Support Agency, Washington, D.C., April 1970, AD 508 902L, Confidential.

Air Force Systems Command (AFSC) Design Handbook DH 27, "System Survivability (U)," 20 May 1972, SECRET.

Downloaded from http://www.everyspec.com

U.S. Army Report USAAMRDLTR7448A “Survivability Design Guide for U.S. Army Aircraft Nuclear Hardening,” August 1974.

Department of the Navy, Naval Air Systems Command SD24 (Volume I, Fixed Wing Aircraft; Volume II, Rotary Wing Aircraft) “General Specification for Design and Construction of Aircraft Weapon Systems. ”

MIL-HDBK- (AS) “Survivability Enhancement, Aircraft, Conventional Weapon Threats, Design and Evaluation Guidelines”

Newmark, N., et al, Air Force Design Manual, AFSWC-TDR-62-138, “Principle and Practices for Design of Hardened Structures” Air Force Special Weapons Center, Kirtland Air Force Base, New Mexico, December 1962, AD 295 408.

DOD Military Handbook MIL-HDBK-XXX-1 “Survivability/Vulnerability, Aircraft Nonnuclear, General” - Volume 1.

Department of Defense (DOD) Military Handbook MIL-HDBK-XXX2 "Survivability/Vulnerability, Aircraft Nonnuclear Airframe” Volume 2.

DOD Military Standardization Handbook MIL-HDBK-22 (WP) “Fire Protection Design Handbook for U.S. Navy Aircraft Powered by Turbine Engines.”

DOD Military Handbook MIL-HDBK-235 “Electromagnetic (Radiated) Environment Considerations for Design and Procurement of Electrical and Electronic Equipment” Part 1; Part 2, Classified.

DOD Military Handbook MIL-HDBK-238 “Electromagnetic Radiation Hazards. ”

AFSC Design Handbook DH 14 “Electromagnetic Compatibility,” 10 January 1973.

Chief of Naval Material, NAVMATIN5T 2410.1B “Electromagnetic Environmental Effects (E3) Policy Within the Material Command.”

DOD Military Handbook MIL-HDBK-XXX-3 "Survivability/Vulnerability, Aircraft Nonnuclear, Engine” - Volume 3.

United States Air Force Project Rand R500 PR “Proceedings of the Second Symposium on Increased Survivability of Aircraft (U),” Volume I, June 1970, SECRET.

DNA 2114H1 through 6, DNA EMP (Electromagnetic Pulse) Handbook: Volume 1 “Design Principles”; Volume 2 “Coupling Analysis”; Volume 3 “Component Response and Test Methods”; Volume 4 “Environment and Applications”; Volume 5 “Resources”; and Volume 6 “Computer Codes.”

AFWL TR 7368 “Electromagnetic Pulse Handbook For Missiles and Aircraft in Flight,” September 1972.

AFWL TR 86401 "EMP Interaction; Principal Techniques and Reference Data.”

Ricketts, Bridges, and Miletta "EMP Radiation and Protective Techniques,” Wiley, 1976.

Downloaded from http://www.everyspec.com

Evaluation

DOD Directive 5000.2 (See SECNAV 5000.1A) System Acquisition in the Department of the Navy.

Zartarian, G., et al, Analysis of Helicopter Response to Nuclear Blast, Volume I Analytical Formulations, Kaman Avidyne, DNA 2910F1, Defense Nuclear Agency, Washington, D.C., November 1972.

Zartarian, G., et al, Analysis of Helicopter Response to Nuclear Blast, Volume II Computer Program Description, DNA 2910F2, Defense Nuclear Agency, Washington, D.C., November 1972.

Zartarian, G., et al, Analysis of Helicopter Response to Nuclear Blast, Volume III Example Application (U), Kaman Avidyne, DNA 2910F3, Defense Nuclear Agency, Washington, D.C., November 1972, Confidential.

Hobbs, Norman, et al, Handbook for Analysis of Nuclear Weapons Effects on Aircraft (U), Kaman Avidyne, DASA 2048, Defense Atomic Support Agency, Washington, D.C., April 1970, AD 508 902L, Confidential.

U.S. Army Report USAAMRDLTR7448A, Survivability Design Guide for U.S. Army Aircraft Nuclear Hardening, August 1974.

AFSC Design Handbook, DH 27, Series 20 Aeronautical Systems, System Survivability (U), 20 May 1972, SECRET.

Backer, E., et al, Structural Analysis of Shells, New York, McGrawHill Publishing Co. Inc., 1972.

Hobbs, Norman, et al, Handbook for Analysis of Nuclear Weapon Effects on Aircraft (U), Kaman Avidyne, DASA 2098, Defense Atomic Support Agency, Washington, D.C., April 1970, AD 508 902L, Confidential.

Martin, H.S., Introduction to Matrix Method of Structural Analysis, New York, McGrawHill Co. Inc., 1966.

Przemieniecki, J.S., Theory of Matrix Structural Analysis, New York, McGrawHill Co. Inc., 1968.

Zienkiewicz, O.C., The Finite Element Method in Structural and Continum Mechanics, New York, McGrawHill Co. Inc., 1968.

Newmark, N., et al, Air Force Design Manual Principle and Practices for Design of Hardened Structures, AFSWCTDR62138, Air Force Special Weapons Center, Kirtland Air Force Base, New Mexico, December 1962, AD 295 408.

Bisplinghoff, Raymond L., Ashley, H., Hallman, R.L., Aeroelasticity Cambridge, Mass., AddisonWesley Publishing Co. Inc., 1955.

Hobbs, Norman P., Wetmore, Kenneth R., and Walsh, John P., TRAP A Digital Computer Program for Calculating the Response of Aircraft to the Thermal Radiation from a Nuclear Explosion, Vol I, Air Force Weapons Laboratory TR7161, October 1972.

Alfred L. Sharp, A Thermal Source Model From Sputter Calculations, Air Force Weapons Laboratory AFWL TR7249, March 1973.

Downloaded from http://www.everyspec.com

Hoggins, James T., and Sharp, Alfred L., Spectral Characteristics of Thermal Radiation Predicted From Sputter Calculations, Air Force Weapons Laboratory TR73152, August 1973.

J. Truitt, R.W., Fundamentals of Aerodynamic Heating, New York, The Ronald Press Company, 1960.

Torgeson, W.L., Johnson, H.C., and Wright, N.B., "An Engineering Study of Air Conditioning Load Requirements for Aircraft Compartments, Wright Air Development Center TR 5524, June 1955.

Thermo-Structural Analysis Manual, WADDTR60517, Vol I, Aeronautical Systems Division, WrightPatterson Air Force Base, Ohio, August 1962, AD 286 908.

SYSCAP-Transient Circuit Analysis Program (TRACAP), North American Rockwell/Autonetics, D0001359022, Control Data Corporation, September 1980.

SYSCAP-Direct Current Circuit Analysis Program (DICAP), North American Rockwell/Autonetics, Control Data Corporation, September 1970.

Bowers, J.C., SCEPTRE A Computer Program for Circuit and System Analysis, PrenticeHall Inc., January 1971.

Johnson, E.D., et al, TRAC: Transient Circuit AnalysisUser Guide, North American Rockwell/Autonetics, C81305/501, Vol 1, Harry Diamond Laboratory, Washigton, D.C., January 1968.

Pistacchi, J.R., TESSNonlinear Circuit and System Analysis Program, TRW Systems Group, CDC TRW 86615900, November 1972.

TREE Simulation Facilities, Battelle, DASA 2432, Defense Atomic Support Agency, Washington, D.C., September 1970.

Blass, M.D., The Effect of Nuclear Radiation on the Combat Effective ness of an Aircraft Crew Member, The Boeing Co., September 1964, AD 452 315.

Moonan, R.L., et al, Preliminary Neutron and Gamma Ray Shielding Analysis Bi Crew/Equipment (U), BiSPO, TFD71489, North American Rockwell, Los Angeles, CA, 8 April 1971, (S).

Personnel Risk and Casualty Criteria for Nuclear Weapons Effects, U.S. Army Combat Development Command, Institute of Nuclear Studies, August 1.971, AD 516 440.

Electromagnetic Pulse Handbook for Missiles and Aircraft In Flight, AFWL TR 7368, Air Force Weapons Laboratory, September 1972.

Oberholtzer, J., Evaluation of Electromagnetic Field Penetrations Through B1 Apertures and Gaps, Final Report, Rockwell International/Los Angeles Aircraft Division, TFD711544, 61 SPO, 11 November 1971.

Oberholtzer, J., Cable Coupling and Shielding Analysis Techniques, Rockwell International, TFD711475, B1 SPO, 26 October 1971

Oberholtzer, J., Coupling Analysis of Specific B1 Circuits, Rockwell International, TFD1476, B1 SPO, October 1971.

Downloaded from http://www.everyspec.com

Oberholtzer, J., Models for Determining Skin Current Coupling to Internal Cables, Rockwell International/Los Angeles Aircraft Division, TFD711477, B1 SPO, 26 October 1971.

Carter, J.M., Aeronautical Systems EMP Technology Review, Boeing Aerospace Group, D224100041, Air Force Weapons Laboratory, Kirtland Air Force Base, New Mexico, 15 April 1972.

Terman, F.E., Radio Engineer Handbook, New York, McGraw Hill, 1943, pp 1130.

Morgan, G.E., Preliminary B1 Analysis and Design Requirements (U), Rockwell International/Autonetics Division, C701463/201, B1 SPO, 31 December 1970 (S).

Morgan, G.E., Final Report on the B1 Shielding Effectiveness Study, Vol 1, Rockwell International/Autonetics Division, C733/201, Air Force Weapons Laboratory, Kirtland Air Force Base, New Mexico, 15 January 1973.

Mock, G.W., and Pinzon, N., Preliminary Analysis of Deliberate Antenna Cable Current and Voltage Gradient of RC/SK, NA73307, 12 June 1973.

Mock, G.W., and Pinzon, N., Analysis of B1 EMP Induced HF Antenna Cable Current and Load Voltage, Rockwell International, NA73426, 29 May 1973.

DNA EMP (Electromagnetic Pulse) Handbook, 6 Volumes, DNA 2114H1, Defense Nuclear Agency, General Electric Company TEMPO, July 1979, Confidential.

Cosindas, F., Julin, D., Guideline for B1 EMP Current Injection Testing, NA73266, Rockwell International B1 Division, 1 April 1973.

Vulnerability Survivability, Trade-Offs

USAAMRDLTR7448A, Survivability Design Guide for U.S. Army Aircraft Nuclear Hardening, August 1974.

Air Force Systems Command Design Handbook, DH 27, Series 20 Aeronautical Systems, Air Force Systems Command System Survivability (U), 20 May 1972, SECRET.

Defense Intelligence Agency, AP55012INT, Physical Vulner ability Handbook Nuclear Weapons, 1 June 1976.

JTCG/AS78V007, Simplified Techniques for Vulnerability Tradeoff Analysis, August 1979.

JTCG/AS77D001, Guidebook for Preparation of Aircraft System Survivability Requirements for Procurement Documents, May 1977.

Sharp, Alfred L., et al, Systems Analysis Blast Environment Routine, AFWLTR7085, Air Force Weapons Laboratory, Kirtland Air Force Base, New Mexico, November 1970, AD 879 423.

Hobbs, Norman P., Wetmore, Kenneth R., and Walsh, John P., TRAP A Digital Computer Program for Calculating the Response of Aircraft to the Thermal Radiation from a Nuclear Explosion, Vol I, Air Force Weapons Laboratory TR7161, October 1972.

Downloaded from http://www.everyspec.com

3. DEFINITIONS

3.1 Definitions of key terms. The terms and definitions set forth below provide a selected set of terms which offers concise definitions for use of the Military Handbook. These and other definitions included in the referenced documents of Section 2 shall apply.

3.1.1 Survivability. The capability of an aircraft to avoid or withstand a man-made hostile environment without sustaining an impairment of its ability to accomplish its designated mission.

3.1.2 Vulnerability. The characteristics of a system which cause it to suffer a definite degradation (incapability to perform its mission) as a result of having been subjected to a certain level of effects in an unnatural (man-made) hostile environment.

3.1.3 Vulnerability reduction. Any technique that enhances the aircraft design in a manner that reduces the aircraft's vulnerability when subject to threat mechanisms.

3.1.4 Survivability enhancement. The use of any tactic, technique, or survivability equipment, or any combination thereof that increases the probability of survival of an aircraft when operating in a man-made hostile environment.

3.1.5 Survivability evaluation. Systematic description, delineation, quantification, and statistical characterization of the survivability of an aircraft in encounters with hostile defenses.

3.1.6 Mission-essential weapon systems (MEWS). Aircraft weapon systems, subsystems, or components that perform a combat mission or are essential to a mission capability.

3.1.7 Threats. Those elements of a man-made environment designed to reduce the ability of an aircraft to perform mission-related functions by inflicting damaging effects, forcing undesirable maneuvers or degrading systems effectiveness.

3.1.7.1 Threat mechanisms. Mechanisms, embodied in or employed as a threat, which are designed to damage (i.e., to degrade the functioning of or to destroy) a target component or the target itself.

3.1.7.2 Nuclear weapon. A device in which the explosion results from the energy released by reaction involving atomic nuclei, , either fission or fusion, or both.

3.2 Definitions of acronyms and abbreviations used in this handbook. The following acronyms and abbreviations used in this Military Handbook are defined as follows:

Downloaded from http://www.everyspec.com

AACP - Advanced Airborne Command Post.
AAW - Air-to-Air Warfare.
AC - Alternating Current.
AFSC - Air Force Systems Command.
AFSWC - Air Force Special Weapons Center.
AFWL - Air Force Weapons Laboratory.
ALECS - AFWL-LASL Electromagnetic Calibration and Simulation.
ARES - Advanced Research EMP Simulation.
(AS) - Suffix to handbook number indicating limited military handbook coordination within the Naval Air Systems Command.
ASW - Antisubmarine Warfare.

CBR - Chemical, Biological or Radiological.
CEP - Circular Error Probable.
CG - Center of Gravity.
CMOS - Complementary Metal-Oxide Semiconductor.
CRT - Cathode Ray Tube.

DASA - Defense Atomic Support Agency.
DC - Direct Current.
DH - Design Handbook.
DICAP - Direct Current Circuit Analysis Program.
DMEA - Damage Mode and Effects Analysis.
DNA - Defense Nuclear Agency.
DOD - Department of Defense.

E3 - Electromagnetic Environmental Effects.
EM - Electromagnetic.
EMC - Electromagnetic Compatibility.
EMI - Electromagnetic Interference.
EMIC - Electromagnetic Interference Compatibility.
EMP - Electromagnetic Pulse.
EMR - Electromagnetic Radiation.
EO - Electro-Optical.
ESSD - Engineering Specifications and Standards Department.
ETI - Early Transitory Incapacitation.

FBW - Fly-By-Wire.
FET - Field-Effect Transistors.
FMEA - Failure Mode and Effects Analysis.
FSC 15GP - Federal Supply Classification Aircraft and Airframe
- Structural Components Group.

HA - Hardness Assurance.
HC Hardness Compliance.
HDBK - Handbook.
HEL - Helicopter Program computer code.

Downloaded from http://www.everyspec.com

HEMP - High altitude EMP.
HM - Hardness Maintenance.
HS - Hardness Surveillance.

IC - Integrated Circuit.
ICD Interface Compatibility Documentation.
IEMP - Internal Electromagnetic Pulse.
IF - Intermediate Frequency.
I/O - Input/Output.
IR - Infrared.

JFET - Junction Field-Effect Transistors.
JP - Jet Propulsion (prefix designator for grades of aviation turbine fuel).
JTCG/AS - Joint Technical Coordinating Group on Aircraft Survivability.

LEMP - Low altitude EMP.
LSI - Large-Scale Integration.
LINAC - Linear Accelerator.
LRU - Line Replacement Unit

MENS - Mission Element Need Statement.
MEWS - Mission-Essential Weapon System.
MHD - Mid-Head Dose.
MIL-
(A thru W)- Military Specification
MIL-HDBK- - Military Handbook.
MIL-STD - Military Standard.
MOS - Metal-Oxide Semiconductor.
MOSFET - Metal-Oxide Silicon Field-Effect Transistor.
MS I - Medium-Scale Integration.

NASTRAN - NASA (National Aeronautics and Space Administration) Structural Analysis computer code.
NAVAIRINST - Naval Air Systems Command Instruction.
NAVMATINST - Naval Material Command Instruction.
NOVA - Nuclear Overpressure Vulnerability Analysis computer code.

PMA - Project Management Air (Naval Air Systems Command).
POE - Point of Entry.

RADAR - Radio Detecting and Ranging.
RAM - Radar Absorbent Materials.
RAMS - Rapid Attenuation Measurement System.

Downloaded from http://www.everyspec.com

RCS - Radar Cross Section.
RF - Radio Frequency.
RFI - Radio Frequency Interference.

SCEPTRE - System for Circuit Evaluation and Prediction of Transient Radiation Effect.
SCR - Silicon-Controlled Rectifier.
SE - Shielding Effectiveness.
SGEMP - System-Generated Electromagnetic Pulse.
STW - Strike Warfare.
SUDIC - Survivability through Use of onboard Digital Computers.
SYSCAP - System of Circuit Analysis Program.

TLD - Thermoluminescent Dosimetry.
TNT - Trinitrotoluene.
TR - Technical Report.
T/R - Transmit/Receive.
TRAC - Transient Circuit analysis.
TRACAP - Transient Circuit Analysis Program.
TRAP - Thermal Response Anlaysis Program.
TREE - Transient Radiation Effects on Electronics.
TRW - Thompson Ramo Woolridge (formerly).

UJT - Unijunction Transistor.
UV - Ultraviolet.

V/STOL - Vertical or Short Takeoff and Landing.
v_{th} - Voltage-threshold.

WE - Western Electric.

Downloaded from http://www.everyspec.com

4. NUCLEAR WEAPON EFFECTS AND BURST TYPES

4.1 General. This section presents a brief review of nuclear weapons effects produced by various nuclear burst types which are capable of affecting aircraft and the potential environments. This review is intended to convey fundamental overview information concerning these effects and which can serve as a starting point for design considerations. Additional details can be obtained from the following documents:

a. Air Force Systems Command (AFSC) Design Handbook OH 2-7, System Survivability.

b. U.S. Army Air Mobility Research and Development Laboratory (USAAMRDL) Technical Report Number USAAMRDL-TR-74-48A, Survivability Design Guide for U.S. Army Aircraft Nuclear Hardening.

In a nuclear explosion, energy is produced as a result of conversion of mass to energy. This conversion takes place according to the relationship:

$$E = mc^2$$

where

E = the energy released,
m = the decrease in mass,
c = the speed of light.

A similar conversion of mass does not take place in a chemical explosion. Nuclear radiation phenomena, which are significant in a nuclear explosion, are absent in chemical explosions. In a chemical explosion, the release of energy is accompanied by the scattering of containment vessel material such as rods or fragments. In a nuclear explosion, the containment vessel materials are vaporized by the heat produced by the detonation.

4.2 Nuclear weapon effects. The specific effects associated with nuclear weapons are enumerated and briefly discussed below:

a. Blast and shock.
b. Thermal radiation.
c. Initial radiation.
d. Residual radiation.
e. Flash.
f. Electromagnetic pulse (EMP).
g. Ejects, dust, and debris.
h. Afterwinds.
i. Fallout.
j. Blackout.

Since blast, thermal and other radiations, and EMP are the principal nuclear weapon threat effects, design guidelines for protection against these effects

Downloaded from http://www.everyspec.com

are discussed in Section 7. Protection from some of these and other effects is discussed briefly in this section.

4.2.1 Blast and shock. An explosion, in general, results from the very rapid release of a large amount of energy within a limited space. This is true for a conventional high explosive such as trinitrotoluene (TNT), as well as for a nuclear explosion, although the energies are produced quite differently. The sudden liberation of energy causes a considerable increase of temperature and pressure, so that all the materials present are converted into hot, compressed gases. Since these gases are at very high temperatures and pressures, they expand rapidly and thus initiate a pressure wave, called a shock wave, in the surrounding medium (air, water, or earth). The characteristic of a shock wave is that there is a sudden increase of pressure at the front, with a gradual decrease behind it. A shock wave in air is generally referred to as a blast wave because it resembles and is accompanied by a very strong wind. In water or in the ground, however, the term shock is used because the effect is like that of a sudden impact. Blast damage from a nuclear explosion has two distinct causes. One cause is overpressure and the other is gust.

4.2.1.1 Overpressure damage. An object at a given point in space is subjected to peak overpressure when the primary blast wave (or in the Mach region, the Mach wave) strikes it. This is the time when the structure of a vehicle is most liable to collapse due to the crushing effect. Pressure produced as a result of overpressure is known as diffraction loading. The air pressure bends or diffracts around the structure so that the structure is eventually engulfed by the blast wave, and approximately the same pressure is exerted on all sides. After the peak, the atmospheric pressure at the given point gradually drops back to normal. Shortly afterward, the pressure is reduced below normal by the suction phase of the explosion. The drop below normal is never as great as the previous rise before it; but it, too, can cause damage.

4.2.1.2 Gust damage. Damage from a nuclear air burst is also caused by wind (or dynamic) pressure. Most of the damage to structures is caused by the positive phase of the pressures; however, there are some structures which suffer greater damage from the dynamic pressure. Forces produced on structures as a result of dynamic pressure are known as drag loading. This type of loading is caused by the transient winds behind the blast wave front, and they either push and pull or create drag on the structure. A near surface burst is characterized by violent winds blowing radially outward from ground zero and, a short time later, by afterwinds blowing inward. The drag of these winds is particularly destructive to lightweight walls, tall objects, antennas, flagpoles, power lines, and parked vehicles. Gust (or wind), rather than overpressure, is the blast phenomenon which often seriously threatens personnel and equipments which might otherwise suffer only slight injuries. The winds resulting from a nuclear explosion can impel heavy or sharp objects

Downloaded from http://www.everyspec.com

with tremendous force, thus converting everyday materials into deadly weapons.

4.2.1.3 Shock. When all (or part) of the fireball strikes (or is formed below) the surface, a shock front in the earth (or water) is formed.

4.2.1.3.1 Ground shock. Ground shock resembles a small earthquake, except that it originates much nearer the surface. It is a threat to land-based personnel and equipment, because it can demolish or damage shelters. For a short distance beyond the actual bomb crater, a zone of total destruction continues. Beyond that is a zone of heavy damage consisting of severe distortion and partial collapse.

4.2.1.3.2 Underwater shock. A shock wave formed under the surface of the water behaves much like a wave propagated in air. Since water is a fluid more dense than air, the values of normal air pressure and overpressure are correspondingly higher in water. The reduction in pressure, after peak pressure is reached in water, is more gradual than in air. On the other hand, the duration of the shock wave in water is shorter than in air. The velocity of sound in water under normal conditions is nearly five times as great as in air. When the peak pressure is high, the velocity of the shock wave is greater than the normal velocity of sound. The rate of motion of the shock front becomes less at lower overpressures and ultimately approaches that of sound, as it does in air. Since part of the shock energy of a shallow underwater burst is transmitted through the surface as a shock (or blast) wave in air, damage to ship superstructures or vehicles parked on ships can occur.

4.2.2 Thermal radiation. The temperatures reached in a nuclear explosion are very much higher than in a conventional weapon explosion, and a fairly large proportion of the energy in a nuclear explosion is emitted in the form of light and heat, the latter generally referred to as thermal radiation. This radiation is capable of causing skin burns and damaging thermally sensitive components at considerable distances from the burst point.

4.2.2.1 Fireball temperature. The fireball is the visible, luminous sphere of hot gases formed by a nuclear explosion. The actual temperature of the fireball is in the range of tens of millions of degrees. It is known that the wavelength corresponding to the maximum energy density of radiation from an ideal or black body radiator, to which the nuclear fireball is a good approximation, decreases with increasing temperature of the radiation. At temperatures above 13000°F (7200°C), this maximum lies in the ultraviolet (UV) and X- ray regions of the spectrum. The thermal radiation received at a distance from a nuclear explosion is characteristic of that of a black body at a temperature of approximately 12000°F (6700°C).

Downloaded from http://www.everyspec.com

4.2.2.2 Energy quantity. The amount of thermal energy falling upon a unit area exposed to a nuclear explosion depends upon the total energy yield, the height of burst, the distance from the explosion, and, to some extent, the atmospheric conditions. The thermal radiation leaving the fireball involves a wide range of wavelengths, from the short UV, through the visible, to the infrared (IR) region; however, much of the UV radiation is absorbed or scattered if it passes through the atmosphere.

4.2.2.3 Thermal pulse shape and duration. The shape and duration of the thermal pulse are dependent upon the burst altitude and yield. Immediately after the explosion, the weapon residues emit the primary thermal radiation. Because of the very high temperature, much of this is in the form of X- rays which are absorbed within a layer of a few feet of air; the energy is then re-emitted from the fireball as (secondary) thermal radiation of longer wavelength, consisting of UV, visible, and IR rays. Shortly after detonation, the expanding shock wave becomes opaque and the apparent surface temperature of the fireball decreases more rapidly for a small fraction of a second. Then, the apparent surface temperature increases again when the shock wave becomes transparent, after which it falls continuously. This causes two surface- temperature pulses; the first is of very short duration, whereas the second lasts much longer. The behavior is quite general for air (and surface) bursts, although the duration of the pulses increases with the energy yield of the explosion. Corresponding to the two surface- temperature pulses, there are two pulses of emission of thermal radiation from the fireball. In the first pulse, which lasts about a tenth of a second for a 1 Mt (4200 TJ) explosion, the surface temperatures are mostly very high. As a result, much of the radiation emitted by the fireball during this pulse is in the UV region. Although UV radiation can cause skin burns, in most circumstances following an ordinary air burst, the first pulse of thermal radiation is not a significant hazard in this respect, for several reasons. In the first place, only about 1 percent of the thermal radiation appears in the initial pulse because of its short duration. Second, the UV rays are readily attenuated by the intervening air, so that the dose delivered at a distance from the explosion may be comparatively small. Furthermore, it appears that the UV radiation from the first pulse could cause significant effects on the human skin only within ranges at which other thermal radiation effects are much more serious. It should be mentioned, however, that although the first radiation pulse may be disregarded as a source of skin burns, it is capable of producing permanent or temporary effects on the eyes, especially on individuals who happen to be looking in the direction of the explosion. In contrast to the first pulse, the second radiation pulse may last for several seconds, e.g., about 10 seconds for a 1 Mt (4200 TJ) explosion, it carries about 99 percent of the total thermal radiation energy. Since the temperatures are lower than in the first pulse, most of the rays reaching the earth consist of visible and IR (invisible) light. It is this radiation which is the main cause of skin burns of various degrees suffered by exposed individuals up to 12 mi (19.3 km) or more, and of eye effects at even greater distances, from the explosion

Downloaded from http://www.everyspec.com

of a 1 Mt (4200 TJ) weapon. For weapons of higher energy, the effective damage range is greater. The radiation from the second pulse can also cause fires to start under suitable conditions.

4.2.2.4 Material temperature increase. Essentially all of the thermal radiation absorbed serves to raise the temperature of the absorbing material, and it is the high temperature attained which causes injury or damage, or even ignition of combustible materials. An important point about the thermal radiation from a nuclear explosion is not only that the amount of energy is considerable, but also that it is emitted in a very short time. This means that the intensity of the radiation (the rate at which it is incident upon a particular surface) is very high. Because of this high intensity, the heat accompanying the absorption of the thermal radiation is produced with great rapidity.

4.2.2.5 Rate of temperature increase. Since only a small proportion of the heat is dissipated by conduction in the short time during which the radiation falls upon the material (except perhaps in good heat conductors such as metals), the absorbed energy is largely confined to a shallow depth of the material. Consequently, very high temperatures are attained at the surface. It has been estimated, for example, that in the detonation of nuclear weapons on Japan during World War II, solid materials on the ground immediately below the burst probably attained surface temperatures of 5400° to 7200°F (3000° to 4000°C). It is true that the temperatures fell off rapidly with increasing distance from the explosion, but there is some evidence that it reached 3270°F (1800°C) at 3200 ft (975.4 m) away.

4.2.2.6 General effects on materials. When thermal radiation falls upon any material or object, part may be reflected, part will be absorbed, and the remainder, if any, will pass through and ultimately fall upon other materials. It is the radiation absorbed by a particular material that produces heat and so determines the damage suffered by that material. The extent or fraction of the incident radiation that is absorbed depends upon the frequency of the radiation and the nature and color of the material or object. Highly reflecting and transparent substances do not absorb much of the thermal radiation and so they are relatively resistant to its effects. A thin material will often transmit a large proportion of the radiation falling upon it and thus escape serious damage. A black fabric will absorb a much larger proportion of the incident thermal radiation than will the same fabric when white in color and will thus be more affected. A light-colored material will not char as readily as a dark piece of the same material. Additionally, since the thermal radiation is within a spectrum including many wavelengths, the interaction of each wavelength must be determined in order to compute the actual energy deposited on a given material. The ignition of materials by thermal radiation depends upon a number of factors, the two most important, apart from the nature of the material itself, being the thickness and the moisture content. A thin piece of a given material, for example, will ignite more easily than a thick one, and a dry sample will be more readily damaged

Downloaded from http://www.everyspec.com

than one that is damp. There is evidence that for thermal radiation pulses of very short duration, such as might arise from air bursts from low-yield weapons or from explosions of large yield at high altitudes, this trend is reversed. In other words, a given amount of energy may be less effective if delivered in a very short pulse (a fraction of a second) than in one of moderate duration (one or two seconds). In some experiments in which certain materials were exposed to short pulses of thermal radiation, it was observed that the surfaces were rapidly degraded and vaporized. It appeared as if the surface had been exploded off the material, leaving the remainder with very little sign of damage. The thermal energy incident upon the material is apparently dissipated in the kinetic energy of the “exploding” surface molecules before the radiation could penetrate Into the depth of the material.

4.2.2.7 General skin and eye effects. One of the serious consequences of the thermal radiation from a nuclear explosion is the production of flash burns resulting from the absorption of radiant energy by the skin of exposed individuals. In addition, because of the focusing action of the lens of the eye, thermal radiation can cause permanent damage to the eyes of persons who happen to be looking directly at the burst. Also important to defensive action is the temporary loss of visual acuity (flashblindness or dazzle) resulting from the extreme brightness, particularly at night when the eyes have been adapted to the dark. This may be experienced no matter in what direction the individual is facing. The various effects of thermal radiation on human beings will be considered more fully in a later section.

4.2.3 Initial radiation. Initial radiation is comprised of gamma rays and neutrons resulting from the nuclear explosion. Usually, initial radiation is considered as that radiation which is emitted within one minute of a nuclear explosion.

4.2.4 Residual radiation. Residual radiation comes from radioactive decay of the fission products of the nuclear reaction and other substances rendered radioactive by neutron activation. This radiation is similar in nature to initial radiation and is emitted over an extended period of time.

4.2.5 Flash. Flash is the intense light emitted during a nuclear detonation. This light can cause flashblindness, retinal burns, or damage to light sensitive sensors.

4.2.6 Electromagnetic pulse. EMP is a time-varying electromagnetic radiation which increases very rapidly to a peak and then decays somewhat more slowly. The radiation has a very broad spectrum of frequencies. ranging from very low to several hundred MHz but mainly in the long wavelength radio frequency (RF) region. Furthermore, the wave amplitude of the radiation varies widely over this frequency range. The EMP is a very complex phenomenon and is heavily dependent upon the conditions of the burst.

Downloaded from http://www.everyspec.com

4.2.6.1 High altitude EMP. High altitude EMP (HEMP) is a short duration single pulse of electromagnetic radiation which increases very rapidly to a peak and then decays more slowly. The frequency content of the pulse extends from very low frequencies (a few hertz) to 100 MHz. HEMP results from an exoatmospheric burst and involves a frequency transformation of gamma rays into RF electromagnetic (EM) radiation. Gamma rays produced by the nuclear explosion are absorbed by air molecules in a layer of the upper atmosphere called the source region. This absorption results in the ionization of the molecules and Compton electrons being ejected close to the speed of light. The Compton electrons spiral in the earth's magnetic field and the resulting cyclotron radiation forms a coherent source of very intense EM radiation called HEMP.

4.2.6.2 Low altitude EMP. Low altitude EMP (LEMP) produced from surface bursts, or bursts at altitudes up to a few kilometer, is characterized as having shorter ranges and lower field strengths, but with a higher spectral content at lower frequencies than HEMP and less content at higher frequencies. Surface EMP has two basic components, the radial and the radiated fields. The radial electric field occurs in the region of the fireball which can extend up to a few kilometers, but varies inversely with the square of the distance. The radiated field, however, travels at the speed of light and varies inversely with the distance. The radiated field is generated when gamma radiation from the burst ionizes surrounding matter and a separation of negative electrons and positive ions created. If this ionized region impinges on the ground, an asymmetrical charge separation in the vertical direction is formed. The net vertical field acts like a vertical dipole antenna which radiates EM energy.

4.2.7 Ejects, dust, and debris. Ejects, dust, and debris are produced as a result of throw out and scouring of the earth media in an outward direction by a nuclear detonation. Unless the weapon is buried deeply, most of the material is displaced laterally. Some of the material is carried aloft in the stem of the mushroom cloud and later becomes fallout. Protection from ejects, dust and debris can be provided by:

a. Ballistically tolerant systems.
b. Sealed crew habitation.
c. Engine inlet covers.
d. Damage tolerant system design.

4.2.8 Afterwinds. Afterwinds are wind currents set up in the vicinity of a nuclear explosion directed toward the burst center resulting from the updraft accompanying the rise of the fireball. Afterwinds cause quantities of soil, dirt, other particles, and debris to be sucked up as the fireball rises. Protection from afterwinds can be provided by:

Downloaded from http://www.everyspec.com

a. Shelters.
b. Ballistically tolerant systems.
c. Tie-downs.
d. Damage tolerant systems.

4.2.9 Fallout. Fallout is the process or phenomenon of the descent to the earth's surface of particles contaminated with radioactive material from the radioactive cloud. The term is also applied in a collective sense to the contaminated particulate matter itself. The early (or local) fallout is defined, somewhat arbitrarily, as those particles which reach the earth within 24 hours after a nuclear explosion. The delayed (or worldwide) fallout consists of the smaller particles which ascend into the upper troposphere and into the stratosphere and are carried by winds to all parts of the earth. The delayed fallout is brought to earth, mainly by rain and snow, over extended periods ranging from months to years.

4.2.9.1 Decontamination. Decontamination is the process of removing radioactive material from a location. It is one of the means which are available for reducing the radiation dose that would be received from fallout. Preferably, it should be accomplished under the supervision of personnel trained in decontamination procedures. In addition, measuring instruments should be used not only to determine the effectiveness of the decontamination but also to make sure that the contaminated material is disposed of in a safe manner. Fallout, because of its particulate nature, will tend to collect on horizontal surfaces; for example, roofs, streets, runways, decks, tops of vehicles, and on the ground. In the preliminary decontamination process, the main effort should be directed toward cleaning such surfaces. The simplest way of achieving this is by water washing, if an adequate supply of water is available. The addition of a commercial wetting agent (detergent) will make the washing more efficient. The radioactive material is thus transferred to storm sewers where it is less of a hazard. Covering the ground around a building with uncontaminated earth or removing the top layer of the ground to a distance, by means of earth-moving equipment, are methods for reducing the dose rate inside a building or shelter. Badly contaminated clothing should be discarded and buried or stored in an isolated location. When the radioactivity has decayed to a sufficient extent, or if the initial contamination is not too serious, laundering may be effective in reducing the activity of clothing and fabrics to permit their recovery. An instrument check should be taken before further use.

4.2.10 Blackout. Blackout results from the ionization of the atmosphere due to a nuclear detonation. In the case of blackout, this ionization affects the communications propagation paths by changing or increasing attenuation such that effective communications are lost. Blackout does not interact with the terminal equipments nor result in damage or upset as is the case with EMP. Blackout is also a late-time (second to hours) effect, while EMP is

Downloaded from http://www.everyspec.com

a prompt effect. Alternate communications paths or modes may be required to negate the effects of blackout.

4.3 Nuclear weapons burst types. The nuclear weapons effects which will predominantly affect aircraft MEWS survivability are dependent upon the relative locations of the MEWS and the burst, the mission of the MEWS, the type of MEWS, and the type and yield of the burst. The hardening of any aircraft MEWS must take all these factors into account, since besides determining which weapon effects are important, they will also be instrumental in determining how hardening should be allocated among weapon effects, and the extent of each weapon effect hardening effort. Also, it should be realized that in planning hardening against nuclear weapons effects, many uncertainties exist; for example, it is unlikely that it will be known in advance where or when a weapon will be detonated and what the energy or type of burst will be. The major nuclear burst types are listed below and their predominant effects are briefly discussed in the remainder of this section:

a. High altitude burst.
b. Air burst.
c. Ground surface burst.
d. Shallow underground burst.
e. Water surface burst.
f. Shallow underwater burst.
g. Confined subsurface burst.

4.3.1 High altitude burst. The general effects associated with a high altitude burst, as seen by a near-earth observer, are:

a. Light: Very intense.
b. Heat: Moderate, decreases with increasing burst altitude.
c. Initial nuclear radiation: Negligible.
d. Shock: Negligible.
e. Air blast: Small on the ground but decreasing with increasing burst altitude.
f. Early fallout: None.
g. EMP: Intense with wide area coverage.

Summary: The most significant effect will be flashblindness and HEMP over a very large area; eye burns will occur in persons looking directly at the explosion. Other effects will be relatively unimportant.

4.3.2 Air burst. The general effects associated with an air burst, as seen by a near-earth observer, are:

a. Light: Fairly intense but much less than for high-altitude burst.
b. Heat: Intense out to considerable distances.
c. Initial nuclear radiation: Intense, but generally hazardous out to shorter distance than heat.

Downloaded from http://www.everyspec.com

d. Shock: Negligible, except for very low air bursts.
e. Air blast: Considerable out to distances corresponding to heat effects.
f. Early fallout: Negligible.
g. EMP: Less intense than that from a surface or a high altitude burst.

Summary: Blast will cause considerable structural damge; burns to exposed skin are possible over a large area and eye effects over a still larger area; initial nuclear radiation will be a hazard at closer distances but the early fallout hazard will be negligible.

4.3.3 Ground surface burst. The general effects associated with a ground surface burst, as seen by a near–earth observer, are:

a. Light: Less than for an air burst but still appreciable.
b. Heat: Less than for an air burst but significant.
c. Initial nuclear radiation: Less than for an air burst.
d. Shock : Will cause damage within about three crater radii but little beyond.
e. Air blast: Greater than for an air burst at close-in distances but considerably less at farther distances.
f. Early fallout: May be considerable (for a high-yield weapon) and extend over a large area.
g. EMP: Less intense than high altitude burst and less for ranging with more low frequency content.

Summary: Except in the region close to ground zero, where obstruction would be virtually complete, the effects of blast, thermal radiation, and initial nuclear radiation will be less extensive than for an air burst; however, early fallout may be a very serious hazard over a large area which is unaffected by blast and other effects.

4.3.4 Shallow underground burst. The general effects associated with a shallow underground burst, as seen by a near-earth observer, are:

a. Light, heat, and initial nuclear radiation: Less than for a ground surface burst, depending on the extent to which the fireball breaks through the surface.
b. Shock : Ground shock will cause damage within about three crater radii but little beyond.
c. Air blast: Less than for surface burst, depending upon depth of burst.
d. Early fallout: May be considerable, if the depth of burst is not too large and, in addition, there may be a highly radioactive base surge.
e. EMP: Less intense than surface burst.

Summary: Light, heat, and initial nuclear radiation will be less than for a ground surface burst; early fallout can be significant, and at distances

Downloaded from http://www.everyspec.com

not too far from the explosion, the radioactive base surge will be an important hazard.

4.3.5 Water surface burst. The general effects associated with a water surface burst, as seen by a near-earth observer, are:

a. Light: Somewhat more intense than for a ground surface burst.
b. Heat: Similar to ground surface burst.
c. Initial nuclear radiation: Similar to ground surface burst.
d. Shock : Water shock can cause damage to ships and underwater structures to a considerable distance.
e. Air blast: Similar to ground surface burst.
f. Early fallout: May be considerable.
g. EMP: Less intense than high altitude burst and less for ranging with more low frequency content.

Summary: The general effects of a water surface burst are similar to those for a ground surface burst, except that the effect of the shock wave in water will extend farther than ground shock. In addition, water waves can cause damage on a nearby shore by the force of the waves and by inundation.

4.3.6 Shallow underwater burst. The general effects associated with a shallow underwater burst, as seen by a near-earth observer, are:

a. Light, heat, and initial nuclear radiation: Less than for a water surface burst, depending upon how much of the fireball breaks through the surface.
b. Shock: Water shock will extend farther than for a water surface burst.
c. Air blast: Less than for a surface burst, depending on the depth of burst.
d. Early fallout: May be considerable, if the depth of burst is not too large and, in addition, there may be a highly radioactive base surge.
e. EMP: Less intense than surface burst.

Summary: Light, heat, initial nuclear radiation, and blast effects will be less than for a surface burst; early fallout can be significant, but at distances not too far from the explosion, the radioactive base surge will be an important hazard. Water waves can also cause damage, as in the case of a water surface burst.

4.3.7 Confined subsurface burst. The general effects associated with a confined subsurface burst, as seen by a near-earth observer, are:

a. Light, heat, and initial nuclear radiation: Negligible or none.
b. Shock: Severe, especially at fairly close distances from the burst point.

Downloaded from http://www.everyspec.com

c. Air blast: Negligible or none.
d. Early fallout: None.
e. EMP: Negligible.

Summary: If the burst does not penetrate the suface, either on the ground or water, the only hazard will be from ground or water shock. No other effects will be significant.

4.4 Distribution of energy. Broadly speaking, the energy released in a nuclear detonation may be divided into three categories: kinetic (or external) energy, i.e., energy of motion of electrons, atoms, and molecules as a whole; internal energy of these particles; and thermal radiation energy. The exact distribution of energy between air shock and thermal radiation is related in a complex manner to the explosive energy yield, the burst altitude and, to some extent, to the design of the weapon. The spontaneous emission of beta particles and gamma rays from radioactive substances, i.e., a radioactive nuclide (or radionuclide), such as the fission products, is a gradual process. It takes place over a period of time, at a rate depending upon the nature of the material and upon the amount present. Because of the continuous decay, the quantity of the radionuclide and the rate of emission of radiation decrease steadily. This means that the residual nuclear radiation, due mainly to the fission products, is most intense soon after the explosion but diminishes in the course of time. Meteorological conditions, such as temperature, humidity, wind, precipitation, and atmospheric pressure, and even the nature of the terrain over which the explosion occurs, may influence some of the observed effects. Nevertheless, the gross phenomena associated with a particular type of nuclear explosion, namely, high altitude, air, surface, underwater, or underground, remain unchanged. The fraction of the explosion energy received at a distance from the burst point depends on the nature and yield of the weapon and particularly on the environment of the explosion. For a nuclear detonation in the atmosphere below an altitude of about 100,000 ft (30.5 km), from 35 percent to 45 percent of the explosion energy is received as thermal energy in the visible and IR portions of the spectrum. Below an altitude of about 40,000 ft, 50 percent of the explosive energy is used in the production of air shock and 3.5 percent in the production of thermal radiation. Thus, for a burst at moderately low altitudes, the air shock energy from a fission weapon will be about half of that from a conventional high explosive with the same total energy release; in the latter, essentially all of the explosive energy is in the form of air blast. This means that if a 20 Kt (84 TJ) fission weapon, for example, is exploded in the air below 40,000 ft (12.2 km) or so, the energy used in the production of blast would be roughly equivalent to that from 10 Kt (42 TJ) of TNT. At somewhat higher altitudes, where there is less air with which the energy of the exploding nuclear weapon can interact, the proportion of energy converted into shock is decreased whereas that emitted as thermal radiation is correspondingly increased.

Downloaded from http://www.everyspec.com

4.4.1 Nuclear radiations. Regardless of the height of burst, approximately 85 percent of the total explosive energy of a nuclear fission weapon produces air blast (and shock), thermal radiation, and heat. The remaining 15 percent is released as various nuclear radiations. Of this, 5 percent constitutes the initial nuclear radiation, defined as that produced within a minute or so of the explosion. The final 10 percent of the total fission energy represents that of the residual (or delayed) nuclear radiation which is emitted over a period of time. This is largely due to the radioactivity of the fission products present in the weapon residues (or debris) after the explosion. In a thermonuclear device, in which only about half of the total energy arises from fission, the residual nuclear radiation carries only 5 percent of the energy released in the explosion. It should be noted that there are no nuclear radiations from a conventional explosion since the nuclei are unaffected in the chemical reactions which take place.

4.4.2 Initial nuclear radiation. The initial nuclear radiation consists mainly of gamma rays, which are EM radiations of high energy originating in atomic nuclei, and neutrons. These radiations, especially gamma rays, can travel great distances through air and can penetrate considerable thicknesses of material. Although they can neither be seen nor felt by human beings, except at very high intensities which cause a tingling sensation, gamma rays and neutrons can produce harmful effects even at a distance from their source. Consequently, the initial nuclear radiation is an important aspect of nuclear explosions.

4.4.3 Residual nuclear radiation. Because about 10 percent of the total fission energy is released in the form of residual nuclear radiation some time after the detonation, this is not included when the energy yield of a nuclear explosion is stated, e.g., in terms of the TNT equivalent. Hence, in a pure fission energy, and in a thermonuclear device, it is, on the average, about 95 percent of the total energy of the fission and fusion reactions.

4.4.4 Delayed nuclear radiation. The delayed nuclear radiation arises mainly from the fission products which, in the course of their radioactive decay, emit gamma rays and another type of nuclear radiation called beta particles. The latter are electrons (i.e., particles carrying a negative electric charge, moving with high speed); they are formed by a change (neutron to proton + electron) within the nuclei of the radioactive atoms. Beta particles, which are also invisible, are much less penetrating than gamma rays, but like the latter, they represent a potential hazard.

4.5 Chronology of events. The phenomena associated with a nuclear detonation, in rough order of their appearance, are:

a. The flash of brilliant light accompanied and followed by heat, both of which are part of the thermal radiation,

Downloaded from http://www.everyspec.com

b. The Initial nuclear radiation starts at the same time but may continue after the thermal radiation has ceased; this radiation produces the EMP.

c. Coincident with the explosion is the production of debris and ejects.

d. Ground and water shock, if any, will arrive, followed very soon by the air blast (and sound) wave.

e. As the fireball rises, afterwinds will be experienced.

f. Early fallout will follow, if any, which may continue for several hours.

g. The final events involve late time effects such as delayed fallout and blackout. As noted, the first (almost instantaneous) indication of a nuclear explosion in the air or on the earth's surface is a brilliant flash of light. In many circumstances, it may be feasible, after observing the flash, to take some appropriate protective action that could greatly minimize the degree of injury suffered. At distances beyond those at which the immediate blast, thermal, and initial nuclear effects of the explosion are significant, there may be some time to make final preparations to decrease the early fallout effects.

Downloaded from http://www.everyspec.com

5. SYSTEM RESPONSES

5.1 Principal effects. The principal nuclear weapon environments which are of concern, when a nuclear weapon is detonated in the vicinity of the aircraft, are:

a. Air blast.
b. Thermal radiation.
c. Nuclear radiation.
d. EMP.

A brief summary of aircraft system, subsystem, and crew response to levels of nuclear environments which are normally specified for aircraft hardening programs follows. Additional information can be obtained from Defense Atomic Support Agency (DASA) Report Number 2048, Handbook for Analysis of Nuclear Weapon Effects on Aircraft.

5.2 Blast. If a nuclear weapon is detonated in the vicinity of an aircraft, pressures on the surfaces of the aircraft facing the burst are increased to a value higher than the incident overpressure due to reflection. The amount of pressure increase is dependent on the incident overpressure, the angle of incidence between the blast wave and the reflecting aircraft surface, and the strength of the shock wave. As the blast wave engulfs the aircraft, the pressure decays to the dynamic pressure plus incident pressure. The time history of the reflected pressure is affected by the size and shape of the aircraft component subjected to the blast. Blast overpressure on striking an aircraft surface may cause dishing of panels and buckling of stiffeners and stringers. On the side struck by the blast wave, the pressure is increased by reflection, and a diffractive force of short duration is generated. The short-duration reflected pressure produces impulsive loads which can damage doors, facings, fuselage panels, and canopies. Since such structures have high natural frequencies, the dynamic response is such that the incident loading is magnified. In addition, the engulfing incident overpressure pulse produces crushing loads which can damage a low-frequency response structure which normally would not be subjected to large aerodynamic loads. As the wings, tail and fuselage are completely enveloped by the blast, further dishing and buckling of skins and structure may result from the crushing pressure differential between the outside and inside of the aircraft.

5.2.1 Gust loading. Additional damaging loads are also developed by the particle velocity accompanying the blast wave, which results in drag loading, usually termed gust loading with reference to aircraft. The duration of gust loading is many times that of diffractive loading, and it develops bending, shear and torsion stresses in the airfoil and fuselage structures. These stresses usually constitute the major source of damage to subsonic aircraft in flight. The nuclear gust effects on an air vehicle encountering the blast wave are similar to those from an atmospheric gust. The material (gust) velocity produces changes in angle of attack and in dynamic pressure.

Downloaded from http://www.everyspec.com

The air density behind the blast wave is increased, causing a further change in dynamic pressure. These changes produce changes in the aerodynamic loads acting on the aircraft, resulting in rigid-body acceleration in translation and rotation. The dynamic response is dependent on the fundamental frequencies of the structural components and the strength and duration of the incident loading. Structural components which are critical for gust loading effects are components such as the wing, tails, helicopter rotor blades, fuselage longerons, and radar attachments. Bending loads are normally critical for these components. Extreme blade deflections for helicopter rotor blades could result in a collision between the blade and the fuselage.

5.2.2 Blast effects on parked aircraft. The diffraction and drag-phase loadings have varying relative importance in producing damage to parked aircraft. In general, the diffraction phase is of primary importance in the zones of light and moderate damage; whereas, in the zone of severe damage, the drag phase assumes more importance.

5.2.2.1 Orientation. Orientation of an aircraft with respect to the point of burst affects vulnerability considerably. If the nose is directed toward the burst, for example, greater weapon effects can be absorbed without damage than for any other orientation.

5.2.2.2 Revetments. The longer duration of the positive phase of the blast from a larger-yield weapon may result in some Increase in damage over that expected from small yields at the same overpressure level. This increase is likely to be significant at input levels producing severe damage, but is not likely to be important at the levels of moderate and light damage. Revetments provide only slight shielding against blast overpressure, and under some conditions reflected pressures within the revetment are higher than corresponding incident pressures. Revetments do, however, provide significant shielding from damage caused by flying debris borne by the blast wave. At higher overpressures, the drag forces due to wind (dynamic) pressure tend to rotate, translate, overturn, or lift a parked aircraft so that damage may then result from collision with other aircraft, structures, or the ground. Aircraft are also very susceptible to damage from flying debris carried by the blast wave.

5.2.2.3 Factors influencing damage. Several factors influence the degree of damage that may be expected for an aircraft of a given type at a specified range from a nuclear detonation. As previously stated, aircraft that are parked with the nose pointed toward the burst will suffer less damage than those with the tail or either side directed toward the oncoming blast wave. Shielding of one aircraft by another or by structures or terrain features may reduce damage, especially that caused by flying debris. Standard tie-down of aircraft, as used when high winds are expected, will also minimize the extent of damage at ranges where destruction might otherwise occur. Aircraft with fabric-covered control surfaces or other exposed ignitable materials may,

Downloaded from http://www.everyspec.com

under certain conditions, be damaged by thermal radiation at distances beyond those at which equivalent damage would result from blast effects. The vulnerability to thermal radiation may be decreased by protecting ignitable materials from exposure to direct radiation or by painting them with protective (light colored) coatings which reflect, rather than absorb, most of the thermal radiation.

5.2.3 Blast effects on aircraft in flight. The response to blast loading of an aircraft in flight is very complex and is situation dependent. Factors which influence the blast response are:

a. Velocity and altitude of the aircraft.
b. Orientation of the aircraft with respect to the burst.
c. Intensity and duration of the overpressure and particle velocity accompanying the blast wave.
d. Geometry of the aircraft components.
e. Natural frequency of the aircraft structural components.
f. Weight and weight distribution at the time of shock arrival.
g. Flight loads on the aircraft at the time of shock and blast arrival.

5.3 Thermal radiation. If a nuclear weapon is detonated in the vicinity of an aircraft, a portion of the resulting thermal radiation is reflected (and transmitted in the case of semitransparent materials) and the remaining amount absorbed by exposed components. The absorbed thermal radiation will induce a sudden increase, followed by a decline, in the temperatures of these exposed components. The resulting temperature transients will induce temperature gradients in the structure which could result in overstress of critical components. Such generation of high temperatures on the structure can result in a reduction of load- carrying capabilities, or, in an extreme case, actual melting of the exposed parts. Since thermal radiation (and the subsequent heating) precedes the arrival of the airblast wave, this heating may substantially degrade material properties and the structural responses to aerodynamic loads and to the oncoming blast wave will be strongly affected. The combined effects of thermal radiation and airblast are referred to as synergistic coupling. Components such as exposed antennas and radomes can degrade to the point where essential avionic functions can no longer be performed.

5.3.1 Thin skin and associated effects. Very thin skins are rapidly heated to damaging temperatures by exposure to the short- period thermal flux, because the thermal energy is absorbed by the skin much more rapidly than it can be dissipated by conduction and convective cooling. Very low levels of radiant exposure can start damaging fires in exposed fabric, rubber and similar materials with low ignition and charring temperatures. Recent design refinements can be used to reduce the vulnerability of aircraft to thermal

Downloaded from http://www.everyspec.com

damage. Eliminating ignitable material from exposed surfaces and either replacing thin skins or coating them with low absorptivity paints will permit aircraft to withstand greater radiant- exposure levels.

5.3.2 Effects on composite materials. Composite materials (e.g., honeycomb panels, fiberglass components) have low thermal conductivity. Because of this low thermal conductivity, the outer surfaces can become very hot, frequently exceeding melting and vaporizing temperatures and resulting in ablation. This ablation can, in turn, degrade the load- carrying and/or performance qualities of the composite materials. Unbonding of honeycomb face sheets is also a possible failure mode which requires consideration.

5.3.3 Effects on semitransparent materials. Semitransparent materials (e.g., aircraft canopies) respond to thermal radiation in a very complex manner because the energy is deposited throughout the thickness of the materials. This complexity in response increases when two or more different materials are laminated together. Thermal energy that is transmitted through the aircraft canopies presents a serious threat to crew members. Thermal radiation can cause burn injuries either directly by absorption of the radiant energy by the skin or indirectly as a result of fires caused by the thermal radiation. The direct burns are often called flash burns since they are produced by the flash of thermal radiation from the fireball. The indirect (or secondary) burns, referred to as flame burns, are identical with skin burns that are caused by any concentrated fire no matter what its origin. The inhalation of smoke or fumes resulting from exposure to burning materials within the cockpit and passenger areas can also result in deleterious effects to the crew. The severity of this type of threat depends strongly on the materials involved. The intense flash of light emitted by a nuclear detonation (thermal radiation) can cause severe flashblindness or even retinal burns in an unprotected eye. The symptoms, Including pain caused by light, foreign-body sensation, lachrimation, and redness, may last for periods ranging from a few hours to several days.

5.3.4 Thermal radiation effects on parked aircraft. An aircraft protectively coated with reflective paint and with all ignitable materials shielded from direct thermal radiation will not be damaged by thermal inputs at distances from a blast at which other aircraft, not so protected, would sustain severe damage. Dark- painted aircraft are especially vulnerable to thermal radiation damage, because dark surfaces absorb three to four times more thermal energy than polished aluminum surfaces or surfaces protected with reflective paint. Temporary shielding by trees, buildings, embankments or similar barriers may provide thermal protection for unprotected aircraft but can actually increase the total blast damage by adding to the flying debris or by multiple reflection of blast overpressures.

Downloaded from http://www.everyspec.com

5.3.5 Thermal radiation effects on aircraft in flight. The radiant exposure received by an aircraft in flight varies widely with atmospheric conditions, orientation of the aircraft with respect to the burst, ground- reflecting surfaces, and clouds. Scatter and reflection add to the direct radiation and under some circumstances the thermal energy incident on an aircraft in space may be two to three times that computed at a given slant range. Conversely, a heavy cloud layer between the burst and the aircraft may let through only a fraction of the predicted value of radiant exposure for a given range. In other situations, reflected radiation from clouds may contribute significant thermal energy to areas of the aircraft shaded from direct radiation. During weapon- effects tests of an aircraft flying in a cloud above the burst, the measured radiant exposure at the top of the aircraft and its cockpit area was as much as one– fourth of the direct radiation on the lower surfaces. This experiment demonstrated the need for protecting combat aircraft from radiant exposure from any direction.

5.4 Nuclear radiation. The nuclear radiation (primarily gamma and neutron radiations) which accompanies a nuclear explosion can have serious effects on the electronic equipment on board the aircraft and on the crew. At levels consistent with aircraft hardening specifications (i.e., levels balanced with the vulnerability of the crew to thermal and nuclear radiations and the vulnerability of aircraft designs to the thermal radiation and blast), effects such as changes in material properties of structural components or changes in the transmissivity of the canopy are insignificant and thus can be ignored.

5.4.1 Gamma radiation. Gamma radiation will produce a photocurrent in proportion to the dose rate in transistors and diodes. Exposure of integrated circuits (ICs) produces individual photocurrents at each junction usually resulting in transients at the external leads of the device. Photocurrents in semiconductor devices can cause transient circuit upset and, in rare instances, junction burnout or circuit device latchup (the condition that exists when the output of a device no longer responds to changes in input). Circuit response to gamma dose rate environments is the combined action of the individual component responses. For many electronic systems, circuit performance is not degraded by the short-duration transients, because the circuits have ample time to recover. For example, a flight control circuit that normally operates at 0.10 to 0.2 second response time will not be seriously affected by a 10 to 50 microsecond gamma rate induced transient. Transient response of digital circuits can result in a change of state of the circuit logic. This problem is minimized if permanent memory is hard-wired, and solid-state circuits are restricted to read- only memories. The logic of the read-only memory circuits can be reinstated following the transient upset.

5.4.2 Neutron radiation. Neutron interaction within the lattice of the semiconductor material causes the atoms to be displaced by inelastic collisions and results in a decrease in beta (transistor gain), increase

Downloaded from http://www.everyspec.com

in leakage currents, increase in junction resistance, and changes in voltage breakdown and switching parameters. The beta of the device is the one electrical parameter that changes the greatest and is the single characteristic which is more critical to circuit function. Although some early-time annealing occurs, neutron effects result in parmanent damage to the solid-state circuits. Circuit devices with large junction areas (e.g., power transistors) are the most vulnerable to neutron radiation. Conversely, high-frequency devices with relatively small junction areas are less vulnerable.

5.4.3 Gamma and neutron radiation environments. Both gamma and neutron radiation environments contribute to the total ionizing dose effects. The total ionizing dose affects certain types of devices such as metal oxide silicon field-effect transistors (MOSFETs) and medium-scale integration/large-scale integration (MSI/LSI) devices that contain MOSFETs. The primary effect is the trapping of charges in the oxide layers resulting in changes in he threshold levels of the switching voltages. Response is sensitive not only to the design of the device but also to the manufacturing process. Exposure of the crew to gamma and neutron radiations can result in incapacitation of the crew and subsequent mission failure. Human response to nuclear radiation may be divided into three phases: Initial. latent, and final. Only the initial phase is considered relevant to pilot nuclear radiation vulnerability critieria. The onset of symptoms (nausea, vomiting, and fatigability) occurs in most individuals within approximately 1 hour following doses equal to or greater than 300 rads (3 J/kg).

5.5 Electromagnetic pulse. As discussed in 4.2.6, the RF energy resulting from a single high-altitude burst can produce a serious EMP threat for all aircraft within an-area the size of the entire mainland United States. The EMP couples into metallic or electrically conductive components (e.g., metallic fuselage structure, helicopter rotor blades) of the aircraft, causing large magnitude, short-duration currents to flow on the surface of the structure. These skin currents do not cuase damage to the airframe itself, but recoupling of currents, voltages, and fields into interconnecting wiring and circuits can result in damage or degradation to sensitive electrical and electronic components.

5.5.1 Skin currents. The frequency and magnitude of the skin currents depends on the aircraft size, configuration (e.g., parked, low-level flight) and the orientation of the aircraft relative to the impinging electrical and magnetic fields. Typical skin currents for helicopters range from 3500 A at a resonant frequency of approximately 8 MHz for attack size helicopters and to 8000 A at a resonant frequency of 4 MHz for a heavy-lift type helicopter.

5.5.2 Coupling. Energy is coupled into the electrical and electronic equipment as a result of internal coupling of skin currents into cables and wire bundles, direct field penetration, or direct coupling into antennas. The magnitudes and frequencies of these coupled currents and voltages depend on

Downloaded from http://www.everyspec.com

the shielding (inherent and deliberate) of the wiring and circuits. This shielding is degraded by apertures and gaps (e.g., openings, use of nonmetallic structure, aircraft skin joints) inherent in aircraft designs.

5.5.3 Transient effects. Digital circuits can fail from the EMP transients due to logic scramble. Some types of sensitive electronic equipment fail at low energy levels due to burnout from the deposition of excessive energies in the devices. Electrical components can fail as a result of arc-over of the electrical insulation of the component or associated wiring.

Downloaded from http://www.everyspec.com

6. SURVIVABILITY DESIGN PROCESS

6.1 Tactics and countermeasures. In a nuclear combat environment when a positive program of system hardening is nonexistent, tactics and countermeasures provide the only meaningful approach to increased survivability of the aircraft MEWS. Nuclear survivability, like nonnuclear survivability of the aircraft MEWS, may be enhanced by application of appropriate survivability enhancement design methods beginning, most advantageously, with conceptual design.

6.2 Vulnerability evaluation. A vulnerability evaluation necessarily involves the study of equipment failure modes. A hardening program has among its objectives the elimination of failure modes in mission critical components at the lower level of weapon effects, and, through judicious design, the increase in combat environmental levels of susceptibility to damage. Making effective use of state of the art survivability enhancement technology is a major undertaking, not only from the viewpoint of design, but also as an important challenge to management in planning and monitoring to ensure that environmental cost and weight and schedule change are kept within acceptable limits. Vulnerability requirements must be realistically formulated and stated in such a way as to be meaningful to the designer which permit design freedom in meeting the requirements.

6.3 Vulnerability and survivability relationship. While performing a mission, an aircraft may encounter a variety of threats. Enemy defenses may be deployed to provide area and local defense of individual targets and target complexes. Defense deployment will depend, within limits, on the tactics and strategies employed by the attacking forces. The prospects for survival of an individual aircraft, or a strike force of several aircraft, depend upon many factors that are not under the control of aircraft designers, either at the time of system design or at any time thereafter. Nevertheless, the design role demands an awareness of vulnerability reduction methods for each nuclear weapon effect, as well as the relationship of hardening to survival. Technically, the bridge between vulnerability and survival is the payload of penetration aids. Operationally, this bridge consists of threat, weapon employment, and tactics. Achievement of a high level of survivability remains unattractive militarily if such levels are achieved at reduced mission effectiveness. Rapid broadening of the baseline of trade-off considerations is a direct consequence of the sharp increase in lethality when nuclear warheads are part of the threat definition. The exact nature of the trade-off studies is critically dependent on program requirements.

6.4 Hardening rationale. Hardening approaches should be based upon the following precepts:

a. The only reason to harden a system is to increase its survivability.
b. Survivability can be measured by the system’s capability to complete its mission.

Downloaded from http://www.everyspec.com

As a consequence, any decision to harden a system must take into account those factors which influence the aircraft's capability to complete its mission. These factors might include threat, mission profile, and subsystem vulnerability levels. The selection of threat/survival topics includes:

a. Projection of threat performance and effectiveness.
b. Threat force size and mix.
c. A future target system.
d. Projection of future conflict environments.
e. Projection of combat materiel deployment.
f. An evaluation of the level of confidence of the projections involved.

Within broad tolerances, then, system hardening, beyond levels inherent in good design, should then be evaluated against other survivability enhancement techniques such as countermeasures, improved tactics, and improvements in other capabilities of the system. In conducting such comparative analyses, seeking a balanced survivability approach to design, it is important not to overlook all the practical, cost effective hardening measures that may be readily incorporated into good design practices to achieve significant inherent system hardness improvements.

6.5 Balanced survivability enhancement trade-off evaluation. The basic steps or considerations which comprise a balanced survivability enhancement trade-off evaluation are listed below. This evaluation method, described herein, allows for balancing survivability requirements (including hardening) against mission requirements and provides for a measure of the increased survivability achieved by hardening. It also provides for criteria on which to base decisions concerning the allocation of survivability resources.

a. Establish a mission profile covering the entire mission. For the mission profile, determine:

(1) The mission-critical subsystems.
(2) The expected threat to the aircraft MEWS during each phase of readiness and flight.

b. Using the mission-critical subsystems as a basis, determine:

(1) The inherent hardness of the total system.
(2) The highest level to which the total system may be hardened, noting any breakpoints in incremental cost, incremental weight, or impact on schedule.

Downloaded from http://www.everyspec.com

c. Determine the nuclear environmental levels associated with each threat. If the aircraft MEWS is targeted directly by the threat, the accuracy of the delivery system may be used to calculate the environmental levels of each weapon effect. If the MEWS is not directly targeted, calculate the ranges at which the system will be exposed to the vulnerability levels determined in Step b for each weapon effect.

d. Using the information generated in Steps b and c, each threat to the aircraft can be evaluated in terms of its severity, and all the threats divided Into three groups based on the following criteria:

(1) Those threats which can be eliminated from further consideration because the environment associated with them will cause little or no damage to the system.
(2) Those threats where environments are such that hardening will substantially increase the system's survival capability.

(3) Those threats where environments are so severe that a combination of hardening and other survivability enhancement techniques are necessary to increase the system's survival capability.

e. At this point, a list of hardening priorities can usually be determined from parts (2) and (3) of Step d. The results of this determination can be used to establish the weapon effect(s) for which hardening should be provided based on the increased survivability to be achieved.

f. Each of the potentially effective threats classified under parts (2) and (3) of Step d should be evaluated on the basis of the following considerations, individually or in combination:

(1) Threat evaluation - What is the probability that the system will be exposed to the threat? How realistic is the threat? How credible is the postulated threat and associated performance and accuracy data? Might the enemy have threats that are more efficient and effective? What are the relevant enemy traditions in resource allocation? What appears to be the relationship of the postulated threat to the overall military posture of the enemy?

Downloaded from http://www.everyspec.com

(2) Tactics - Can system maneuvers avoid the threat delivery vehicle? Can detection be avoided by altering mission profile? Can the severity of the threat be reduced by flying below (or above) certain altitudes or avoiding certain geographic areas?

(3) Countermeasures - Can defensive systems be used to avoid, decoy, or destroy the threat delivery systems?

(4) Change in burst point range - For each threat, determine the range at which the system will be exposed to the nuclear environment levels equal to the vulnerability levels established in Step b. Determine which effects the system must be hardened against as the burst point approaches the system. Establish a maximum hardening level (usually crew dose) and determine how much change in the range results from hardening to this level. Finally, evaluate this change in range which results from hardening to the maximum level, taking into consideration the accuracy (e.g., circular error probable (CEP)) of the delivery system and/or possible tactics to avoid the threat.

(5) Change in system mission capability - For example, can more survivability be achieved by increasing the radar range of an E- 2C so that it will not be as close to enemy aircraft? Or, as another example, can more survivability be attained by increasing the communications capability of an Advanced Airborne Command Post (AACP) so that its racetrack mission profile can be increased?

g. Based on the above trade-off evaluation, a list of hardening priorities should be established, certain threats should be evaluated using the same evaluation, certain hardening levels should be reevaluated, and a list of survivability enhancement options should be prepared. The detail of these options should be consistent with the development status of the system and the amount of information available.

h. Evaluate each hardening decision in terms of cost and degradation of other system performance capabilities.

Downloaded from http://www.everyspec.com

6.6 MEWS-threat data format. Two useful formats which can be used for presentation, overview, and evaluation of MEWS-threat data are described herein.

a. The first format involves the construction of threat effect bar charts. The bars on the chart should indicate the relative importance of each weapon-threat effect; bar charts should be constructed for each variation in burst type, weapon yield, weather conditions, terrain situations, and ranges. Comparison and examination of the set of bar charts can provide:

(1) Relative importance of weapon threat effects as a function of encounter conditions.
(2) Insights into hardening, tactics, and other trade-offs.
(3) A basis for hardening decisions.

This format also indicates the spectrum of variations which is possible in the expected environment, not only as a result of weapon types and yield, but also as a function of encounter altitudes and relative orientation between the aircraft and weapon detonation. Orientation can be taken into account by means of a worst-case evaluation; that is, by performing evaluations to determine the most vulnerable orientation to each weapon effect. Such a comparison of lethal ranges provides a tool for:

(1) Revealing the most vulnerable aircraft configuration.
(2) Identifying the most lethal weapon effect on a particular aircraft configuration.
(3) Tracking the effectiveness of aircraft hardening programs.

b. The second format involves the construction of a table, as follows:

(1) List MEWS subsystems and included components in a column; subsystem components should be indented in order to facilitate use of the table.

(2) Make a column to the right of the subsystem component column for each threat effect; head each column with the name of the threat effect.

(3) Repeat the set of threat effects for each mission phase and head each columnar set of threat effects with the nomenclature of each mission phase.

(4) Make entries in the table corresponding to the threat effect level for each mission phase-subsystem and mission phase-component combination.

Downloaded from http://www.everyspec.com

This format of data presentation allows identification of:

(1) Most critical subsystem.
(2) Most critical component.
(3) Most critical threat effect.
(4) Most critical mission phase.
(5) Most critical subsystem, component, or threat effect as a function of mission phase.
(6) Most critical subsystem or component as a function of threat effect,
(7) A basis for a prioritized hardening scheme.
(8) A basis for tracking aircraft hardening programs (through table updating).

6.7 Threat environment specification guidelines. The following subsections present guidelines for specifying the hostile environment when determining the response of an aircraft in flight to nuclear effects. This environment may be the free-field environment external to the aircraft or the environment at some point internal to the aircraft. The guide includes a tabulation of significant factors (i.e., blast, thermal, neutron, gamma ray, X- ray, EMP, and crew response) which influence aircraft response to the environment.

6.7.1 Blast. Critical blast factors are peak overpressure and gust velocity. Each factor should ideally be specified in terms of vulnerability volumes, or, if this is not possible, several limits should be given which reflect and describe in a sense the physical shape of the vulnerability volume. Plus or minus ranges along all three axes are not adequate for specifying gust velocities, but are adequate for specifying peak overpressures. Factors which influence the response of an aircraft in flight to blast loading and which should also be specified where applicable to peak overpressures and gust velocities are:

a. Velocity (m/s) and altitude (m) of the aircraft.
b. Orientation of the aircraft (polar coordinates (m, rad)) with respect to the burst.
c. Duration (s) of the overpressure and gust velocity accompanying the blast wave.
d. Geometry of the aircraft components.
e. Natural frequency of the aircraft structural components.
f. Aircraft configuration (e.g., internal/external stores, wing position).
g. Aircraft gross weight and center of gravity (CG) location at the time of shock.
h. Terrain elevation or altitude (m).

6.7.2 Thermal radiation. Thermal intensity levels (J/m2) should be specified as a function of warhead yield. Factors which influence the response of the aircraft in flight to incident thermal loading and which should also be specified are:

Downloaded from http://www.everyspec.com

a. Velocity (m/s) and altitude (m) of the aircraft.
b. Orientation of the aircraft (polar coordinates (m, rad)) with respect to the burst.
c. Absorptivity of material surfaces.
d. Spectral distribution (J/m2 - wavelength) vs time.
e. Atmospheric conditions:
   (1) Terrain elevation or altitude (m).
   (2) Sea level visibility (km).
   (3) Haze layer height (m).
   (4) Sea level water vapor pressure (Pa).
   (5) Ground albedo.
f. Cloud conditions:
   (1) Albedo of clouds.
   (2) Height of clouds (m).

6.7.3 Nuclear radiation.

6.7.3.1 Neutrons. Important parameters for specification of the neutron threat are:

a. Neutron fluence (n/cm^2) for aircraft electronics in terms of 1 MeV silicon equivalent.
b. High-energy neutron flux ($n/cm^2/s$) for aircraft electronics in terms of 1 MeV silicon equivalent.
c. Neutron energy spectrum ($n/cm^2/MeV$) and the number of neutrons per energy band which influence the response of the aircraft in flight to neutron effects.

6.7.3.2 Gamma rays. Important parameters for gamma rays are specified as follows:

a. Total gamma dose (J/kg) (Si) for aircraft electronics.
b. Total gamma dose rate (J/kg/s) (Si) on aircraft electronics.
c. Factors which influence the response of the aircraft in flight to gamma rays and which should also be specified where applicable are:
   (1) Orientation of the aircraft (polar coordinates (m, rad)) with respect to the burst.
   (2) Pulse width (s).

6.7.3.3 X-rays. Important parameters for X-rays are:

a. Incident X-ray environment by:
   (1) Energy spectrum ($J/m^2/keV$).
   (2) Total energy (J/m^2).
b. Absorbed X-ray dose (J/kg) (Si or gold) (as applicable) for aircraft electronics.
c. X-ray dose rate (J/kg/s) (Si) for aircraft electronics.
d. Altitude (m) and orientation of the aircraft (polar coordinates (m, rad)) with respect to the burst.

Downloaded from http://www.everyspec.com

6.7.4 Electromagnetic pulse. The electric field intensity is specified in volts/meter and the magnetic field intensity is specified in ampere-turns/meter as a function of time and the direction of polarization with respect to the aircraft. Factors which influence the response of aircraft electronics to EMP and which should also be specified are:

a. Response of the total physical system as a receiving antenna. This depends upon the geometry of the system and the magnitude and frequency spectrum of the incident EMP.
b. The degree of coupling between the system as an antenna and those electrical components which are sensitive to transient voltages and/or currents.
c. The state of the sensitive components at the time of the transient.

6.7.5 Crew response. Total nuclear radiation dose is specified in J/kg. Thermal intensity levels (J/m^2) are specified as a function of incident angle and yield. Factors which influence the response of a crew to radiation and thermal effects and which should be specified where applicable are:

1. Orientation of the aircraft (polar coordinates (m, rad)) with respect to the burst.
2. Crew protection devices against flashblindness and retinal burns (thermal curtain, goggles, or other protection)
3. Duration of thermal pulse at aircraft altitude.
4. Portion of crew body exposed (whole body, head, abdomen, other) .
5. Time remaining to accomplishment of mission.
6. Complexity of mission (single target, multiple targets, delivery altitude, maneuver, or other mission parameters).

6.8 Survivability enhancement trade-offs. The commitment to a hardening program at the onset of design is a commitment to a specific kind of design program. During preliminary design, survivability enhancement trade-off data are developed to the same guidelines and objectives as any other preliminary design trade-off parameter. A strong operational orientation is vital at all but very nominal levels of hardening. The reasons for this emphasis stem from the nature of the nuclear weapon environment itself where levels are logarithmic with distance from detonation.

6.8.1 Supplemental and secondary hardening benefits. Modern electronic equipment designed to military electromagnetic interference (EMI) standards achieves as a bonus some level of inherent hardness to EMP. Additional hardening may be provided by proper electrical design of the aircraft structure, which is designed for discharge of accumulated static electrical charge. While the EMP spectrum is weapon design, yield, and altitude dependent, designing to lightning requirements does provide a level of

Downloaded from http://www.everyspec.com

inherent hardness, as does EMI design of electronic systems. Similarly, the modern high-performance military aircraft has a naturally high resistance to blast effects where moderate design changes, often based on extensive interaction analyses, offer significant increases in the level of hardness achieved in the vehicle design.

6.8.2 Hardening penalties. Similar trade-offs may be found in the hardening of electronics and the thermal hardening of aircraft structures. Ordinarily, the first penalty thresholds involve cost and schedule risks that are associated with design, development, and test or design validation. As hardening objectives are increased, new thresholds are reached. Incremental weight, volume, and power penalties become a factor in the overall performance of the aircraft. Incremental cost rates also increase and analyses are further complicated in that penalty functions are not continuous but occur uniquely, as determined by the pacing items that are vulnerable to any of the several weapon effect damage mechanisms.

6.8.3 Results summary format guidelines. A guideline format for a table which may be used to summarize the principal results of survival enhancement studies and trade-off evaluations is described. Some items are representative of design hardening of the aircraft; others are typically part of the aircraft total payload, and each candidate penetration aid and aircraft defense system has associated with it unique cost, weight, volume, and power penalties which also relate to performance, mission, and survival. Consideration of all items should be introduced early in the evaluation to insure balancing the overall survivability planning for a new design. This table is constructed by listing in a column all considered aircraft hardening proposals or fixes. Additional columns with the following types of headings are arranged as described below to the right of the aircraft hardening fix column:

a. Penalties.
   (1) Height added.
   (2) Performance degradations.
   (3) Total costs.
   (4) Maintenance considerations.
   (5) Reliability considerations.
b. Benefits.
   (1) Increase in threshold damage or failure levels for each threat effect.
c. Comparisons.
   (1) Change in survival probability.
   (2) Cost effectiveness.
   (3) Change in survival probability with various counter measures.
   (4) Change in survival probability with various tactics.

Downloaded from http://www.everyspec.com

6.8.4 General objective. The objective of all aircraft survivability enhancement techniques is to increase survivability which in turn enhances availability and readiness of aircraft resources. Each technique contributes to this objective In its own peculiar way and with its own unique set of penalties. No single technique is effective against all types of enemy weapons, tactics, defenses or under all engagement conditions. The spectrum of available alternatives should be examined and trade-offs performed in order to approximate an optimum mix for any particular aeronautical system and application.

6.8.5 Trade-off penalties. Aircraft survival, during any mission phase or in an encounter with any defensive weapon system, can be enhanced by the application of proper combinations of available techniques. The associated penalties can, however, range from negligible to exorbitant or unacceptable in terms of system performance, costs, or schedules. For example, in hardening avionics against transient radiation effects, the penalties in added weight may be negligible but their effects on system costs and schedules can be significant. This is due to the additional engineering design and testing required to provide the requisite circuit overload characteristics and to establish a preferred parts list. In the hardening of an aircraft structure against blast overpressure, the weight penalty may similarly be negligible for requirements which can be satisfied by bracing and good design. Further increases in blast resistance requirements will ultimately Involve weight penalties.

6.8.6 Penalty limits. Weight increases can penalize an aircraft system in many ways, including takeoff characteristics and support requirements, growth factors, range penalties, and payload reductions. The range penalty can be such that a payload reduction is required to reach assigned targets with a consequent increase in the number of sorties required to accomplish the mission. The increased sortie requirement results in additional attrition and its potential impact on total force procurement and costs. Considerations such as these lead to the conclusion that payload optimization is a significant product of the trade-off evaluations leading to the procurement of new aeronautical systems or the modification of existing systems.

6.8.7 Payload optimization. Definitive answers to all the problems associated with payload optimization are not available in view of the large number of uncertainties concerning potential enemy intentions and capabilities. However, the best possible answers under the circumstances are required. Where definitive answers are not forthcoming, then evaluations should be performed to provide the utmost visibility into the problem to provide a rational basis for decision making regarding the introduction of new or modified aeronautical systems into the operational inventory.

6.8.8 Summary considerations. A number of ideas have been discussed, some of which may be new to a designer and manufacturer of aircraft embarking upon a survivability enhancement program. Among the more important of these is

Downloaded from http://www.everyspec.com

important of these is the concept of conducting a vulnerability evaluation of the design in the context of the nuclear threat that might be encountered during each mission/profile phase. A balanced hardening program may span several distinct, often characteristically different, nuclear devices and a variety of enemy employment options. A second important concept is that some sort of deliberate program of aircraft hardening is necessary for any aircraft programmed for operation in the nuclear environment. Equally Important is the concept of planning a vulnerability reduction program in a balanced survivability context. Resource allocation decisions should consider active defense options as prospective alternatives to increasing hardness levels established as design requirements. A flexible approach is particularly important in this area of management planning. Analytically, one of the more important concepts is the identification of incremental cost breaks, incremental design breaks (redesign), and step effects in schedule impact. The breakpoints do not lend themselves to symmetric tabulation, but this disadvantage is more than offset by improvements achieved in program visibility.

Downloaded from http://www.everyspec.com

7. DESIGN GUIDELINES

7.1 General. All proposed designs for fixed or rotary wing aircraft must be in concert with Naval Air Systems Command SD- 24, General Specification for Design and Construction of Aircraft Weapon Systems.

7.1.1 Structures. The following subsections Identify guidelines useful in designing nuclear blast-hardened aircraft structures. The following documents are also applicable:

a. Military Specifications MIL-A-8806, MIL-A-8860, MIL-A-8861, MIL-A-8863 through MIL-8870, and MIL-S-8698.
b. Military Handbook MIL-HDBK-XXX-2, Survivability/ Vulnerability, Airframe - Volume 2.
c. Air Force Design Manual AFSWC-TDR-62-138, Principle and Practices for Design of Hardened Structures.
d. AFSC Design Handbook DH 2-7, System Survivability.
e. U.S. Army USAAMRDL-TR-74-48A, Survivability Design Guide for U.S. Army Aircraft Nuclear Hardening.

7.1.1.1 Aircraft design state. Depending upon the extent of development of an aircraft or aircraft design, two basic approaches can be taken toward increasing aircraft survivability from a structural standpoint. For aircraft which are already operational or are in the production stage, structural reconfiguration is not feasible. Hence, increased survivability can only be achieved by means of weapon effects avoidance or maneuvers designed to place the aircraft in the most survivable orientation and dynamic situation. For aircraft in the preliminary design stage, survivability can be increased by the proper choices of structural configuration, materials, and fabrication techniques.

7.1.1.2 Approach. In addition to the normal operational loads, all nuclear weapons effects which may affect aircraft structure must be considered by the structural designer in their proper chronological order of occurrence. Additionally, the designer must consider the simultaneous or near simultaneous action of all weapons effects upon the structure and the total aircraft MEWS. The goal of the structural designer is to design the aircraft structure such that a catastrophic failure does not result when the ultimate design load is experienced.

7.1.1.3 Pulse duration. In evaluation of nuclear hardness, the extremely short duration of the nuclear pulse must be considered. Analytical and experimental programs have demonstrated that, if the nuclear blast pulse is short compared to the period of the structure, the structure can withstand much higher loadings than would be predicted by conventional static evaluations. Evaluation of structural response to nuclear blast loads must consider nonlinear material behavior and large deflection capability to predict the level of nuclear hardness available at little or not structural

Downloaded from http://www.everyspec.com

weight penalty. Preliminary estimates may be based on elastic evaluations, but, if design penalties result, in-depth inelastic, large-deflection evaluations should be conducted.

7.1.1.4 Critical loads. The design for each structural element of the aircraft must be such that it satisfies the most critical load conditions which will be experienced. The maximum operational critical loads must be compared with those produced by nuclear weapons effects in order to determine reserve structural strength capabilities and combined time-load relationships.

7.1.1.5 Direct and indirect load paths. A good design practice in designing aircraft for reduced vulnerability to nuclear blast is to provide direct load paths. Direct load paths minimize complex load reaction, transfers, and stress concentrations while indirect load paths provide potential points of weakness. The high rate of loading associated with nuclear blast magnifies the importance of structural design inadequacies and can cause structural weak spots to become extremely critical.

7.1.1.6 Load transfer points. The points and number of points on the structure of the aircraft which receive flight loads from control and lift surfaces should be located and determined such that the aircraft is capable of functioning under limited flight load conditions after a noncatastrophic structural failure has occurred.

7.1.1.7 General structural design techniques. General guidelines to be followed in survivable structure design are:

a. Proper choice of materials.
b. Use of large fillets.
c. Avoidance of sharp corners.
d. Gradual changes in section.
e. Provision for large edge distances at holes.
f. Reduction in bearing stresses.
g. Reduction of eccentricities, joggles, and structural flexing.

7.1.1.8 Desirable design practice. The following design practices are generally considered desirable to increase aircraft survivability:

a. DO give major attention to actual stresses, especially at stress concentrations, rather than to the nominal average stresses.

b. DO visualize how load is transferred from one part or section to another in a structure and the distortions which occur during loading to help locate the points of high stress.

Downloaded from http://www.everyspec.com

c. DO use gradual changes in section and symmetry of design.

d. DO give careful attention to location of joints and types of joints.

e. DO use symmetrical joints wherever possible.

f. DO stiffen unsymmetrical joints.

g. DO design joints so that all parts will participate equally.

h. DO give more attention to possible tensile failure of the plates, rather than to shear failure of the rivets under repeated loads.

i. DO avoid open holes and loosely filled ones.

j. DO give more attention to holes containing stressed rivets or bolts than to those containing idle or unstressed rivets or bolts.

k. DO use tightly torqued bolts.

l. DO use simple butt joints in preference to other types of welded joints.

m. DO dress weld beads flush with adjacent plates of welded butt joints for maximum fatigue strength.

n. DO give preference to multiple load path-type structures when permissible.

0. DO give careful attention to fabrication details to improve fatigue life.

p. DO choose the proper surface finishes.

q. DO provide suitable protection against corrosion.

r. DO prestress members or parts of members, where possible, to reduce the range of stress without appreciably increasing the maximum stress in the cycle.

s. DO consider the benefits of shot peening and localized cold working.

t. DO consider clearance between rotor blade and fuselage for helicopters exposed to nuclear blast environments.

Downloaded from http://www.everyspec.com

u. DO design aircraft access doors such that deformation caused by blast overpressure does not preclude easy opening or removal of doors for maintenance and repair functions.

7.1.1.9 Undesirable design practices. The following design practices are generally considered undesirable from a survivability standpoint:

a. DON'T attach secondary brackets, fittings, handles, steps, bosses, grooves, and openings at locations of high stress.

b. DON'T use rivets for carrying repeated tensile loads. Bolts are usually superior to rivets under repeated tensile loadings.

c. DON'T expect maximum fatigue strength of parts in which machine countersunk rivet holes are used. Machine counter sunk rivet holes are prone to produce fatigue failures.

d. DON'T use sharp reentrant angles.

e. AVOID types of metallic plating that have widely different characteristics from the underlying material.

f. AVOID the use of machines and structures under conditions involving vibration at the critical or fundamental frequency of either individual parts or of the structure as a whole.

g. AVOID using impression stamps, for Identification purposes, in high-stressed areas.

h. AVOID configuration arrangements which enhance rotor blade and fuselage interference.

7.1.1.10 Fatigue design guidelines. Designs which are reliable and less prone to fatigue failures will usually provide benefits in the area of nuclear survivability: Such design guidelines are enumerated in 7.1.1.10.1 through 7.1.1.10.5.

7.1.1.10.1 Number of wing and empennage spars. A multispar structure is preferred over a monospar structure.

7.1.1.10.2 Distribution of the bending material. It is preferred to distribute the bending material to large numbers of elements rather than concentrate all the bending material in the spar caps. This is to prevent large reduction in static strength due to failure in one member.

Downloaded from http://www.everyspec.com

7.1.1.10.3 Type of covers. In general, the use of thick skins is preferred over light skin with a large number of stringers. The former type construction is more stable and is therefore less susceptible to fatigue cracks from oilcanning, vibration, or compression and shear buckling under design loads.

7.1.1.10.4 Type of major splices. A major splice is one whose failure would cause loss of aircraft. Multiple bolt joints are preferred in lieu of single or double bolt attachments. The number of splices, particularly service splices, should be held to a minimum.

7.1.1.10.5 Discontinuities. Reduce cutouts or other discontinue ties to a minimum in primary structure. Where they cannot be avoided, allowance should be made for static overstrength of the tension elements.

7.1.1.11 Gust effects on parked aircraft. Gust effects may be divided into two categories. The first consists of the loads on the structural components due to aerodynamic loading. The second considers the effects of gross aircraft motions induced by aerodynamic forces. The aircraft motion may cause indirect damage to the structural components resulting from lift-off from the ground and subsequent impact, or from overturning, or from crushing of the landing gear.

7.1.1.11.1 Aircraft tie-downs. Aircraft tie-downs and tie-down points must be designed in such a manner as to be capable of minimizing aircraft damage due to nuclear weapon gust effects. Consideration in the design of tie-downs and points of attachment on aircraft are:

a. Number.
b. Type.
c. Placement.
d. Ease of attachment and release.
e. Maintainability.
f. Routing of EMP generated skin currents to ground.

7.1.1.12 Fall-safe criteria. Aircraft which are designed in a fail- safe manner must exhibit some predefine fraction of the ultimate strength required for flight loads after failure of a single principal structural element. The extent of a fail-safe design is determined by post failure aircraft requirements. If the aircraft is required to complete the mission after a failure, the fail-safe design requirements will be more stringent than if survival and mission abort are required.

7.1.1.13 Performance effects. In designing survivable and fail- safe aircraft strictures, the designer must remain aware of the effects of structural design upon aircraft performance, The use of redundancy as well as heavier structural elements will result in a gross weight penalty. Also, the space available for other aircraft subsystem equipments or fuel may be reduced.

Downloaded from http://www.everyspec.com

7.1.1.14 Aircraft life. In addition to other structural design criteria, the design life of the aircraft is a factor. The aircraft must not only be able to be operational and combat survivable, but also must remain so over its design life. Additionally, the structural design must provide for maintainability and for salt water and normal corrosion resistance.

7.1.1.15 Design compromise. The design of the aircraft structure must be a suitable compromise involving all the aforementioned criteria arrived at through performance of the appropriate trade-off analyses. Design strictly for the purpose of nuclear effects hardening may adversely affect the survivability of the aircraft to nonnuclear threats and the detection of the aircraft by enemy sensors. For example, the presence of thermal coatings on an aircraft may increase the detection probability of the aircraft by IR or radar means.

7.1.1.16 Related subsystems and considerations. The design of the structure of an aircraft may affect the design or the functional effectiveness of other aircraft subsystems. Examples of this kind of situation are:

a. The use of structural composites affecting the electrical subsystem grounding scheme.

b. The use of structural composites affecting the Faraday shielding effectiveness of the aircraft skin.

c. The production of noxious gases by structural composites upon thermal heating.

The structural designer must assure not only that his design is survivable, in both the normal operational and combat environments, but also that its potential effects upon other aircraft subsystems are understood by all concerned.

7.1.2 Hydraulic subsystem. The routing and location of hydraulic lines, pumps, filters, reservoirs, and actuators should be such that a non-catastrophic structural failure does not cause further degradation or aircraft loss due to effects on the hydraulic subsystem. Since hydraulic fluid is flammable and pressurized, care must especially be taken in the vicinity of high temperature aircraft components. Structural failure, such as skin buckling or structural member breaking or bending, can cause rupture of hydraulic components leading to loss of associated function or aircraft fire. Design guidance for aircraft hydraulic systems which concern safeguards for system safety and integrity that are closely related to survivability techniques for nuclear weapon effects are contained in MIL-H-5440 and MIL-H-8891; additional applicable documents are MIL-H-5606, MIL-H-8890, and MIL-H-83282. Significant survival enhancement can be achieved through proper hydraulic circuit design to minimize failure. The following design techniques should be considered:

Downloaded from http://www.everyspec.com

a. Utilize fail-safe techniques for electrically controlled hydraulic valves or equipment where Inadvertent actuation due to weapon effects would result in a condition that would affect aircraft performance, survival, or mission success.

b. Design or select hydraulic system components such as valves, filters, and accumulators to resist leakage or failure due to structural deformations or shock from blast effects. Allow components to tear loose from structure rather than rupture connecting hydraulic lines or hoses.

c. Design equipment and distribution lines to permit structural deflections from blast effects without rupture or leakage. For example, where relative motion between two structural elements may occur, use flexible hoses, coiled tubing, or spring clips to permit hard line movement without leakage, kinking, or rupture.

d. Avoid hydraulic line connectors in areas where fluid leakage would cause a fire hazard, smoke, or toxic fumes to generate and migrate into the crew stations.

e. Use circuit monitoring and automatic control of flight control or weapon delivery hydraulic systems to allow mission completion even though a portion of the system has become inoperative or degraded by weapon effects.

7.1.2.1 Hydraulic fluid. Consider the type of hydraulic fluid used for the specific aircraft. Viscosity, foaming, flash point, and shearing effect characteristics of current hydraulic fluids change when exposed to nuclear radiation. Consider the magnitude of such changes from the expected level of survivable radiation and their effect on system performance related to aircraft survival and mission success. Viscosity changes and gassing of fluids can adversely affect the response rates of servos and actuators. Select fluids which will minimize (or prevent) this condition or provide compensation features within the circuit to minimize their effects. For example, provide air separators large enough to keep entrained gas to an acceptable level for survivable radiation exposures as well as normal operational use. Silicate esters and disiloxanes appear to be more resistant to gamma radiation than the currently used petroleum base hydraulic fluid (MIL-H-5606 or MIL-H-83282), and they exhibit better high-temperature characteristics.

7.1.2.2 System isolation. Isolate critical or essential subsystems, required for performance or mission success, from less essential subsystems by using separate hydraulic systems or circuits to minimize potential failure points from structural deformations, shock, or secondary hazards created by the nuclear blast, thermal pulse, or radiation effects. Use isolation

Downloaded from http://www.everyspec.com

valves to provide such isolation when exposure of the aircraft to nuclear weapon effects is anticipated.

7.1.3 Fuel subsystem. The routing and locations of fuel lines, filters, pumps, fuel-oil coolers, fuel controls, and other fuel subsystem components should be such that a non-catastrophic structural failure does not cause damage to the fuel subsystem of the aircraft. Structural deformations can cause fuel subsystem components to rupture. Leaking fuel can subsequently cause aircraft fires, explosions, or fuel depletion which can in turn cause additional aircraft damage or aircraft attrition. Since fuel is the most flammable liquid aboard the aircraft, extreme care should be taken regarding the fuel system design. Applicable documents are MIL-F-38363, MIL-G-5572, MIL-T-5624, MIL-T-83133, and MIL-HDBK-221(WP).

7.1.3.1 Hydrodynamic ram. Fuel tanks should be designed such that skin buckling due to blast loads does not cause hydrodynamic ram rupture.

7.1.3.2 Tank location and construction. Locate and construct fuel system tankage to minimize loss or leakage from nuclear detonation effects. For example, wing integral tanks may be more likely to sustain deformation and leakage from blast effects than fuselage-installed fuel cells that are capable of withstanding greater blast effects and higher thermal radiation pulse. Avoid tank locations where leakage fuel may be ingested into the engine inlet and cause engine damage or failure. Construct integral fuel cells to allow for extreme flexing caused by shock waves and to permit retention of fuel and necessary system operations. Inherent shielding should be used wherever possible. Applicable documents are MIL-B-83054, MIL-S-8802, MIL-T-5578, MIL-T-25783, and MIL-T-27422.

7.1.3.3 Fuel management. Sequence the fuel system to use the most vulnerable tankage first, such as integral wing tanks that may be the most susceptible to leakage from blast effects. This sequencing must be in accordance with CG limitations. Related design considerations should include:

a. Ensure that adequate fuel flow is available for mission completion, by gravity feed if possible, in the event fuel boost or transfer pump power may be lost due to nuclear weapons effects.

b. Avoid using electronic fuel gaging or sequencing equipment that is easily damaged or failed from nuclear radiation effects. Use simple electromechanical devices or fluidic systems where practical.

c. Avoid using nuclear radiation source detection devices and fuel quantity measuring devices that would suffer unacceptable degradation from nuclear weapons effects.

Downloaded from http://www.everyspec.com

7.1.3.4 Fuel lines. Routing and attaching fuel distribution lines and venting systems require attention to the possible hazards of internal fire and/or explosion caused by ignition of fuel from leaking couplings and lines. Fuel feed lines should follow the strongest portion of structure to minimize flexing, distortion, and crushing of these critical lines, and also should avoid the hot-engine section or bleed-air lines that would provide a ready ignition source. Locate fuel line couplings in the safest area where fuel leakage would result in least possibility of fire or explosion. Use drainage paths and/or positive venting to prevent migration of leakage or creation of fuel-air vapor mixture needed to allow ignition. Applicable documents are MIL-C-83291, MIL-H-7061, and MIL-H-18288.

7.1.4 Electrical subsystem. The routing and locations of electrical wires, wire bundles, busses, and other electrical components should be such that a structural failure which the aircraft can survive does not cause further degradation due to effects on the electrical subsystem. Since fly-by-wire (FBW) flight control systems depend upon electrical power for operation, the electrical subsystem becomes attrition critical in such cases. Deformation of aircraft structural members or skin should not cause loss of electrical power to the FBW flight control system and resulting in aircraft control degradation or aircraft loss. Short circuits and heating caused by damage to the electrical system can provide ignition sources for flammables in the vicinity. Related design considerations should include:

a. Provide redundant circuits and power generation sources such that failure of one due to nuclear weapon effects will not result in loss or degradation of electrical power needed for survival or operation of essential mission equipment.

b. Employ an emergency electrical power source for essential subsystems that bypasses normal feeder circuits where the primary electrical systems are lost, overloaded, or malfunctioning. Provide automatic sensing and switch over for the emergency system with a warning system to alert crew of primary system failure.

c. Route essential electrical system cables to avoid areas where structural deformation from blast effects may cause wire separation or short circuits.

d. Design attachments for essential electrical equipment to fall before a structural deformation load can cause failure or malfunction of the unit. Avoid installing essential components or wire bundles in secondary hazard areas where hot gases, corrosive materials, or other damaging conditions may occur due to nuclear weapon effects.

e. Applicable documents are MIL-E-25499, MIL-STD-461, MIL-STD-462, MIL-HDBK-235, MIL-HDBK-238, and AFSC Design Handbook DH 1- 4.

Downloaded from http://www.everyspec.com

7.1.5 Flight control subsystem. The routing and location of flight control subsystem rods, levers, bellcranks, attachment points, and cables should be such-that a structural failure which the aircraft can survive does not cause flight control system degradation or loss of the aircraft due to effects upon the flight control system. Deformation of aircraft structural members or skin should not cause difficult, erratic, or degraded mode operation of the flight control system nor jamming of the system. If the flight control subsystem is of the FBW type, then the considerations mentioned in 7.1.4 apply. If the flight control subsystem is of a design which includes FBW, hydraulics, and mechanical linkages, examination of the system should be made to determine areas where structural damage might incapacitate more than one or all redundant systems. Flight control subsystems should be designed with backup capability. Applicable documents are MIL-D-81980, MIL-F-8785, MIL-F-9490, MIL-F-18372, MIL-F-83300, and MIL-H-8501.

7.1.5.1 Control rod routing. Route mechanical push-pull rod or control cable runs along major structural members to minimize probability of jamming or restricted travel from nuclear blast effects on secondary structures. Use self-aligning bearings for control system torque tubes where structural or torque tube deformations would cause jamming or binding. Where push-pull rods are employed, use short rod assembly lengths with wing arm bell cranks to avoid jamming from structural deformation that is possible with long rod assemblies and fairlead arrangements.

7.1.5.2 Power boosted systems. Isolate flight control power source from other subsystems to minimize potential failure or malfunction of sources due to structural deformation or damage from blast effects. Use redundant power supplies and boost components where single power source vulnerability to nuclear detonation effects are unacceptable.

7.1.5.3 Full power systems. Where dual path mechanical linkage is employed as pilot signal to the power servo unit, provide methods to allow full control travel in the event one of the redundant mechanical linkage paths has become jammed, restricted, or separated by nuclear blast effects. Use design enhancement techniques for control system power sources to ensure that failure or degradation from nuclear effects is avoided.

7.1.5.4 Fly-by-wire. Where pilot input is provided by FBW, consider redundant paths with adequate separation and safeguards to ensure that aircraft control is not lost or degraded due to otherwise survivable nuclear detonation effects.

7.1.6 Environmental control subsystem. Arrange control circuitry to provide pressure when circuit power is lost or interrupted due to weapon effects or material failure. Consider methods to provide automatic or crew-actuated raw air pressurization to supplement or replace degraded or failed normal pressure system. Keep pressurization requirements to a

Downloaded from http://www.everyspec.com

minimum to reduce possibility of explosive decompression of crew due to structural damage or weakening from blast or thermal pulse effects. Provide crew and survival essential equipment with priority of available cooling or heating systems with automatic or crew selected fail-safe condition in the event control power is lost or interrupted. Consider use of ram air cooling sufficient for crew or equipment required for mission success or aircraft survival . Use separate redundant pressurization sources and circuits for crew compartment, "g" suit, and essential penetration and weapon delivery equipment. Structural deformation from blast effects should not cause separation or damage to environmental system ducts, lines, signal or control cables. Related design considerations should include:

a. Keep high-temperature bleed line pressure as low as practical to minimize creation of a secondary hazard condition resulting from line or duct leakage due to blast effects. Route such lines in structural tunnels or major load paths to prevent or minimize such hazards. Position connectors and components of hot gas systems to minimize creation of secondary hazards, such as impingement of hot gas on other mission essential subsystems, the generation of toxic fumes or smoke that would migrate or be present in the crew compartment, or the initiation of a fire or explosion.

b. Use liquid coolant media for water separators that will not cause toxic or fire hazards as a result of leakage or liberation due to nuclear detonation effects.

c. Applicable documents are MIL-B-81365, MIL-E-18927, MIL-E-38453, and MIL-H-18325.

7.1.7 Pneumatic subsystem. The routing and locations of pneumatic lines and components should be such that a structural failure which the aircraft can survive will not cause degradation to pneumatic subsystem functions. Isolate critical or essential subsystems or circuits needed for aircraft performance, survival, or mission success, from less critical systems by using separate pneumatic power sources or circuits to minimize system failure points. Use fail-safe isolation valves that may be actuated in those portions of the mission where nuclear detonations may occur. Use circuit monitoring and automatic selection of circuit control to minimize loss of essential performance or mission degradation. Provide adequate pilot warning of such circuit control with optional override by crew, if necessary. Applicable documents are MIL-P-5518 and MIL-P-8564.

7.1.7.1 Subsystem components. High-pressure pneumatic systems are a potential source of explosive type hazards if damaged, and must be considered during all design phases along with the direct effects of nuclear detonations. Use materials and design configurations for pressurized

Downloaded from http://www.everyspec.com

pneumatic components that would disintegrate explosively when damaged by the direct or secondary effects of a nuclear detonation. Fragmentation and energy release may cause serious damage to nearby essential subsystems or personnel injury. Use filament wound pressure vessels that will resist explosive shattering when damaged.

7.1.7.2 Routing and location. Route hot or high-pressure pneumatic lines to avoid potential hazard areas, such as fuel systems, oxygen supplies, and ammunition, where interaction from a nuclear blast effect would result in a fire or explosion hazard. Avoid locating hot or high- pressure line connectors where leakage due to weapon effects would also lead to secondary hazard conditions. For example, a hot air line leakage impinging upon the gas charge end of a hydraulic accumulator may result in an overpressure explosion of the unit that would cause more destruction than the hot gas leakage alone. Use flexible lines or hoses in areas where large relative motion of structure may occur from blast effects.

7.1.8 Oxygen subsystem. The routing and location of oxygen subsystem components should be such that structural failures which the aircraft can survive do not cause degradation to or loss of the oxygen system. Loss or degradation of the oxygen subsystem can cause crew Incapacitation and subsequent loss of the aircraft. Ignition sources and flammable materials should be kept away from potential oxygen system rupture points. Applicable documents are MIL-D-8683 and MIL-D-19326.

7.1.9 Avionics subsystem. Avionics equipments and associated interconnections should be located in a manner such that a structural failure which the aircraft can survive does not cause avionics subsystem failures. Structural deformation can cause physical damage to avionic subsystem black boxes and the components within the boxes, electrical short circuits, and disconnect of interconnections between boxes if the displacement is severe enough. Electrical arcing and heating due to damaged avionics equipments can provide an ignition source for flammables in the vicinity. Applicable documents are MIL-I-8700 and NAVMATINST 2410.1B.

7.1.10 Liquid cooled avionics. Avionics which is liquid cooled usually uses a type of silicate ester. Since this liquid is flammable, the design guides discussed in 7.1.2 and 7.1.3 apply.

7.1.11 Fire extinguishment subsystem. The fire extinguishment subsystem should be designed to have active nodes at the locations which have the highest probability of fire due to structural damage caused by blast. The activation devices should not inadvertently activate the extinguishment subsystem due to the shock associated with blast effects; additionally, fire sensing and warning subsystems should be designed to preclude false alarms because of blast or shock effects. Applicable documents are MIL-C-22284, MIL-C-22285, MIL-D-27729, MIL-F-7872, MIL-F-23447, and MIL-M-12218.

Downloaded from http://www.everyspec.com

7.1.12 Aircrew escape subsystem. Structural design in and around the area of aircrew stations must not cause aircrew escape subsystems, procedures, or avenues to become unusable. Structural deformation which the aircraft can survive should not jam ejection seats, canopies, escape doors, initiation and control circuits, or detonate ejection seat rockets. Additionally, survivable structural damage should not degrade escape systems to an extent which will cause additional aircrew injury after operation of the degraded mode system. Applicable documents are MIL-A-46103, MIL-A-46108, MIL-A-46165, MIL-A-46166, MIL-B-43366, MIL-C-18491, MIL-C-83124, MIL-C-83125, MIL-E-9426, MIL-I-8675, MIL-P-83126, MIL-S-9479, MIL-S-18471, MIL-S-46099, MIL-S-58095, and MIL-STD-1288.

7.1.13 Landing gear subsystem. The landing gear should be designed in a manner which will preclude door wrinkling or damage to adjacent structures from disallowing door opening. Reinforcement of landing gear doors and adjacent structures should be provided to prevent this situation.

7.1.14 Arresting gear. The arresting gear subsystem must be capable of allowing the aircraft to endure an arrested carrier landing after suffering non-catastrophic structural damage. Surviving structural damage is of no benefit if the aircraft is lost upon arrested recovery. Reinforced and redundant load carrying structure and a gravity drop arresting hook are desirable design features. Survivable arresting gear and associated structure are essential, since they are critical to surviving an arrested recovery aboard the carrier.

7.1.15 Catapult launch hook. The catapult hook and its load carrying structure should be designed to withstand at least one catapult launch after the aircraft has suffered survivable structural damage and has been recovered aboard the carrier. This design philosophy will allow a flightworthy aircraft to leave the carrier for a repair depot after routine maintenance, damage assessment, and repair have been performed.

7.1.16 Propulsion subsystem. A nuclear blast wave, including reflections, may affect many parts and functions of the propulsion subsystem. Possibilities to be considered in an exploratory analysis include:

a. Engine stall.
b. Engine overrun and overtemperature.
c. Primary and afterburner flameout.
d. Component and structural failure.

Applicable documents are MIL-E-5007, MIL-E-8593, MIL-I-83294, MIL-L-7808, MIL-L-21058, MIL-L-23699, MIL-P-26366, MIL-T-5579, and MIL-HDBK-XXX-3.

7.1.16.1 Design integration. Propulsion system integration includes design of a suitable inlet duct system. Initial design considers variations in airflow as a function of altitude and Mach number. Transient responses and recovery are usually considered among the initial conditions for inlet design. The inlet duct can be designed for transient recovery,

Downloaded from http://www.everyspec.com

accounting for effects of overpressure and thermal transient. The supporting hardware systems also must be capable of surviving the transient interval. Failure during the transient interval could result in:

a. Degraded propulsion performance.
b. Loss of propulsion as a result of associated airframe or structural damage.

7.1.16.2 Sensors. Since, within reasonable limits, an inlet can be designed so that transient recovery is possible, those components such as thermal sensor, pressure sensor, tap, and exposed engine structure must be capable of surviving the overpressure/thermal environment. Thermal or pressure sensors are ordinarily selected for the design condition with a reasonable band for operational variations. It is expected that these devices would contain attenuation capability for the blast/thermal environment; it is important to ensure operation of these devices, thereby providing the system with the information for transient recovery.

7.1.16.3 Actuation devices. The airframe duct structure actuation devices, which provide the mechanism for transient recovery, must be reviewed to assure that sufficient integrity is present to survive the overpressure, shock, and thermal transient. The propulsion installation itself, if it contains airflow sensitive devices for cooling, such as engine shrouds, must be capable of survival since ordinary design conditions may not consider pressure differentials that may be experienced as a result of shock and overpressure. Exposed portions of engine tailpipes and nozzle actuator mechanizations can be rendered inoperative (or partially operative) to the degree where their malfunction results in severe degradation or loss of propulsion performance.

7.1.16.4 Other duct effects. Other actual duct effects should also be studied. Such things as shock/boundary layer interactions (plane shock and reestablishing wave phenomena), shock diffraction due to compressor hub, boundary layer separation, flow in an adverse pressure gradient field, as well as shock wave and vortex processes at the entry into the duct, should be considered for an exact approach.

7.1.17 Radar absorbent material. Radar absorbent materials in and around engine air inlets should not unbend from aircraft surfaces due to blast effects, enter aircraft engines, and damage the engines.

7.1.18 Optical fiber designs. Subsystem designs utilizing optical fiber signal paths should not have paths routed near structure or skin which is likely to deform and damage signal paths during a period of blast overpressure.

7.1.19 External antennas. External aircraft antennas should be arranged, designed, and attached to the aircraft in a manner which will minimize

Downloaded from http://www.everyspec.com

damage if exposed to blast overpressure. Since antennas cannot be arranged in a manner which will reduce vulnerability from all directions simultaneously, it is desirable to arrange the antennas to minimize vulnerability in one or more directions and to use maneuvers to expose the least vulnerable aspect of the aircraft to blast overpressure.

7.1.20 External stores attachments. External stores attachments should be designed in a manner which will minimize damage to aircraft skin, structure, and other subsystems if they are ripped free of the aircraft by blast effects. MIL-A-8591 is applicable.

7.1.21 Synergistic effects. Deformation of aircraft structural elements can cause synergistic damage effects involving one or more other aircraft subsystems. Structural designs must preclude the manifestation of these situations Such situations usually involve fire; for example, a fuel line routed along the fuselage ruptures because of skin panel deformation. The leaking fuel proceeds to a point within the aircraft at which ignition occurs. The ensuing fire then burns through flight control system components causing loss of aircraft control. Due to the variety of aircraft types, their designs, and subsystem designs, all possible synergistic combinations cannot be identified here. They can only be identified and prevented by a purposeful, thorough examination of the overall aircraft and subsystems design from an integrated system point of view by survivability engineers. Surviving a structural failure is useless if the aircraft is lost because of related, synergistic effects on other aircraft subsystems. A thorough multilevel failure mode and effects analysis (FMEA) should be performed to identify synergistic effects situations. MIL-STD-1629 is applicable.

7.2 Thermal hardening.

7.2.1 Structures. The two basic approaches to thermal hardening of aircraft structures are:

a. Resist the thermal energy.
b. Reflect the thermal energy.

Reflecting the energy is the more desirable solution since resisting the energy may require the use of heavier gauge material to resist the higher temperatures sustained. The advantage to an aircraft with reduced absorbance is directly proportional to the percentage decrease; an aircraft with 0.25 absorbance can sustain twice the nuclear thermal irradiation of an aircraft with 0.50 absorbance. Documents applicable to structural design are MIL-A-8806, MIL-A-8860, MIL-A-8861, MIL-A-8863, MIL-A-8864, MIL-A-8865, MIL-A-8866, MIL-A-8867, MIL-A-8868, MIL-A-8869, MIL-A-8870, and MIL-S-8698.

7.2.1.1 Thermal flux variation. The thermal pulse produced by a nuclear weapon burst is characterized by two peaks of comparable height. The first peak is of very short duration and can be ignored for most calculations

Downloaded from http://www.everyspec.com

involving burst heights below 20,000 ft (6.10 km). The slope of the pulse is a function of altitude; as altitude increases, the minimum value located between the two pulses increases until, at very high altitudes, the two peaks merge.

7.2.1.2 Initial temperature. For many aircraft, the initial temperature of most components may be approximated by ambient air temperature. This approximation is valid when flight speeds are low enough to prevent appreciable aerodynamic heating and, when flight altitudes are low enough, that the high aerodynamic heat transfer coefficient forces skin temperature to approach air temperature. The air temperature approximation is not valid for high-speed aircraft or for components which encounter:

a. Locally high speeds, such as on rotor blades.
b. Heating from the interior, such as on engine compartment skins.
c. Cooling from the interior, such as on integral fuel tanks.
d. Discharge of hot gases, such as engine exhaust.
e. Other special environments.

For these cases, initial temperatures must be calculated. These initial temperatures must be considered in addition to the temperatures produced by the nuclear weapon thermal pulse in order to determine the maximum temperatures an aircraft design must be able to withstand.

7.2.1.3 Absorbance reduction. Techniques for reducing aircraft skin absorbance include.

a. White paint coating.
b. Flame-sprayed aluminum oxide.
c. Flame-sprayed zirconium oxide.
d. Fired-on gold and silver.
e. Clean aluminum skin.

Applicable documents are MIL-C-83286 and MIL-P-23377.

7.2.1.4 Weight penalty. Substantial weight penalties are associated with techniques a. through d. of 7.2.1.3. The weight penalties for techniques a. through c. can range from approximately 200 to 500 lbs or from 91 to 227 kg.* The nominal thickness of gold and silver associated with technique d. is 0.0002 in or 0.0051 mm; the weight penalty associated with this technique is of course dependent upon the area covered and can be computed by using the equation: Weight Penalty = (Coating Thickness)(Coverage Area)(Material Density). The cost penalty associated with technique d. will also be greater than that associated with the other methods. The techniques mentioned, including technique e.,

*Weight penalties are based upon a 9000 ft^2 (836.13 m^2) wetted area and a 2 mil (0.051 mm) thickness.

Downloaded from http://www.everyspec.com

can provide an absorbance of 0.25 or less. It is possible to achieve substantial thermal hardening (approximately 0.25 absorbance) by keeping the aircraft surfaces free from accumulations of grease, dust, and corrosion. It should be noted that the use of highly reflective coatings will significantly increase the susceptibility of the aircraft to detection by conventional threats (i.e., visual and IR directed weapons systems).

7.2.1.5 Composites.

7.2.1.5.1 Skin and structure junctures. The structure underlying the skin can be designed to provide additional aircraft thermal capacity through the transfer of heat from the skin to the structure. The effectiveness of this technique is dependent upon the properties of the thermal pulse being considered and the properties and combinations of the aircraft skin and structural materials.

7.2.1.5.2 Fibrous composites. The thermal properties of the composites used must be such that deformation and subsequent degradation of aircraft structural integrity and flying qualities remain acceptable. Additionally, the weakening of composites due to the thermal pulse must not be such that the ensuing blast overpressure will cause loss of structural integrity or flying qualities.

7.2.1.5.3 Sandwich and honeycomb materials. The materials used to attach the face sheets to the core in honeycomb construction usually have a melting temperature lower than that of the face sheets. This attachment constitutes the weak link in honeycomb type construction. Generally, honeycomb with thin face sheets will fail through intracell buckling; those with light density cores will fail through wrinkling, and those with both thin face sheets and light density cores will fail through shear crimping. Sandwich type materials should not be used in locations where they might be heated to a point which causes unbending of face sheets or overstressing resulting in loss of load carrying capability.

7.2.1.5.3.1 Thermal properties. Since raw materials used in the construction of sandwich materials may undergo chemical changes during the bonding and curing processes, testing of samples should be undertaken to assure accurate knowledge of thermal properties.

7.2.1.5.4 Radomes. The design of the nose radome is of prime importance because of the large flight loads which it must endure. Loss of the nose radome will usually result in damage to the radar system and at least a mission abort, and its loss may even have deleterious effects upon aircraft survivability.

7.2.1.5.5 Semitransparent materials. Semitransparent materials, such as aircraft canopies, respond to thermal radiation in a complex manner, because the energy is deposited throughout the thickness of the material.

Downloaded from http://www.everyspec.com

Additional heating of such materials may also be caused by transmitted energy which is reflected from objects behind the semitransparent material back onto the semitransparent material. Such phenomena must be taken into account in the evaluation of such materials on the survivability of aircraft MEWS. Glass is highly resistant to heat, but, as it is very brittle, it is sometimes replaced by transparent or translucent plastic materials or combined with layers of plastic, as in automobile windshields, to make it shatterproof. These plastics are organic compounds and so are subject to decomposition by heat. Nevertheless, many plastic materials, such as Bakelite, cellulose acetate, Lucite, Plexiglas, polyethylene, and Teflon, have been found to withstand thermal radiation remarkably well. At least 60 to 70 cal/cm^2 (25.1×10^5 to 29.2×10^5 J/m^2) of thermal energy are required to produce surface melting or darkening. Applicable documents are MIL-G-5485 and MIL-W-81752.

7.2.1.6 Coating quality control. The quality of coating materials in manufacture should be monitored to ensure batch consistency, since inconsistencies in the manufacturing process can cause differences in optical properties. Additionally, absorbance will vary with the thickness and uniformity of coating application as well as substrate conditions.

7.2.2 Liquid containing subsystems. Subsystems containing liquids should not be located near thin skin or in places such that thermal heating can cause vaporization of the confined liquid. Such situations may result in vapor locks, rupture of the containment vessel, or degradation in the operation of the associated subsystem. Leakage of flammable fluids can lead to aircraft fire and possible aircraft loss. Subsystems in this category are:

a. Hydraulic.
b. Fuel .
c. Liquid oxygen.
d. Liquid cooling of avionics.
e. Lubrication.
f. Fire extinguishment.

7.2.2.1 Fuel subsystem. Use insulation or thicker wall construction for a thin-skin integral tank which may be exposed to nuclear thermal pulses. Do not use seals or gaskets in exposed fuel system components which will degrade or deform due to thermal heating. Such components include refueling ports and probes. Applicable documents are MIL-B-83054, MIL-F-38363, MIL-G-5572, MIL-H-7061, MIL-H-18288, MIL-S-8802, MIL-T-5578, MIL-T-5624, MIL-T-25783, MIL-T-27422, MIL-T-83133, and MIL-HDBK-221 (WP).

7.2.2.2 Fuel management. Sequence the fuel system to use the most vulnerable tank first. This must be done within CG limitations.

7.2.3 Electrical subsystem. Electrical subsystem components and wires should not be located near thin skin or in places where insulation

Downloaded from http://www.everyspec.com

may be subjected to thermal overheating resulting in short circuits, generation of smoke or noxious fumes, or fire. Electrical subsystem components, whose operation is adversely affected by resistance fluctuations caused by temperature changes, should be protected from thermal effects. Select electrical wiring insulation resistant to thermal radiation effects to prevent short circuits or generation of smoke and toxic fumes. Applicable documents are MIL-E-25499, MIL-STD-461, MIL-STD-462, MIL-HDBK-221(WP), MIL-HDBK-235, MIL-HDBK-238, and AFSC Design Handbook DH 1-4.

7.2.4 Flight control subsystem. Flight control subsystems which utilize FBW designs should not have electrical components and wires located such that they are exposed to thermal overheating. Applicable documents are MIL-D-81980, MIL-F-8785, MIL-F-9490, MIL-F-18372, MIL-F-83300, and MIL-H-8501.

7.2.5 Pneumatic subsystem. Pneumatic subsystem lines, tubes, and components should not be routed near thin skin or in a manner which allows exposure to thermal overheating. Overheating of pneumatic subsystem components can result in tube rupture or degradation of subsystem functioning. Applicable documents are MIL-P-5518 and MIL-P-8564.

7.2.6 Avionics subsystem. Avionics components and associated wiring near exterior skin surfaces should be thermally isolated from the exterior skin if the components are heat sensitive. Applicable documents are MIL-I-8700 and NAVMATINST 2410.1B.

7.2.7 Aircrew escape subsystem. Aircrew escape subsystems should be designed to disallow inadvertent functioning or preclusion of operation initiated by thermal overheating. Applicable documents are MIL-C-83124, MIL-C-83125, MIL-E-9426, MIL-P-83126, MIL-S-9479, MIL-S-18471, and MIL-S-58095.

7.2.8 Aircrew habitations. The design of the aircrew areas should not include materials which will produce smoke or noxious fumes upon thermal irradiation. Such reactions can incapacitate crew members or inhibit vision or other functioning in critical situations. In aircraft equipped with a thermal curtain, hood or shield, this device will usually protect aircrew habitation materials and survival equipment. In such cases, exposure to thermal radiation hazards will only occur during curtain activation time. Applicable documents are MIL-A-46103, MIL-A-46108, MIL-A-46165, MIL-A-46166, MIL-C-18491, MIL-I-8675, MIL-S-46099, and MIL-STD-1288.

7.2.8.1 Survival equipment. Aircrew downed-aircraft survival equipment should be located where it will not be exposed to thermal irradiation and suffer damage, resulting in loss of designed functional capability.

Downloaded from http://www.everyspec.com

7.2.9 Oxygen subsystem. Materials which can produce smoke or noxious fumes upon thermal irradiation should not be used in the design of or in proximity to aircrew oxygen supply subsystem components where it is possible for them-to enter the subsystem. Applicable documents are MIL-D-8683 and MIL-D-19326.

7.2.10 Landing gear subsystem. Aircraft tires should be protected from thermal effects. Tires which are exposed to thermal effects may be degraded in their load carrying capability, burst because of interior air expansion, ignite if the radiation is too intense, or cause noxious fumes and smoke to be generated. The aircrew and critical subsystems must be protected from fire, smoke, and fumes. Subsystems containing flammables must also be protected. Preservation of tire load carrying capability is especially important to controlled and damage-free carrier landings - this damage refers to both aircraft and ship. Exposed tires on Vertical or Short Takeoff and Landing (V/STOL) aircraft are particularly susceptible.

7.2.10.1 Arresting hook subsystem. The tail hook of the arresting hook subsystem, since it can be exposed to thermal radiation, must be constructed of material which will not suffer thermal fatigue and strength loss subsequent to irradiation. The preservation of the designed performance of the arresting hook and adjacent load bearing structure is critical to incident-free carrier recoveries.

7.2.11 Radar absorbent material. Radar absorbent materials (RAM) should not have undesirable thermal properties. Undesirable properties include loss of effectiveness subsequent to thermal irradiation and’production of smoke and noxious fumes. Smoke and noxious fumes from overheating of RAM must be prevented from entering the aircrew compartments or oxygen systems. Smoke and gases produced by overheating of RAM in engine air inlet ducts must not cause engine flameout or other adverse effects on aircraft engines. RAM in engine air inlet ducts should not unbend from aircraft skin, enter aircraft engines, and damage the engines. RAM design should allow for ease of damage repair. Structural RAM of honeycomb sandwich construction such as that used in engine air inlets is subject to the failure of sandwich structure as described In 7.2.1.5.3. See United States Air Force Project Rand Report R-500-PR, Proceedings of the Second Symposium on Increased Survivability of Aircraft (U), Volume I, June 1970, SECRET (page 173 et al) for a description of structural RAM.

7.2.12 Canopy seals. The effects of thermal damage to canopy seals and secondary effects on aircrews should be determined and appropriate design techniques utilized to minimize problems. Violation of canopy seals may allow chemical, biological, or radiological (CBR) contaminants to enter aircrew habitations.

7.2.13 RF gaskets. RF gaskets, used to defeat the EMP threat mechanism of damage, should not be rendered ineffective by thermal radiation.

Downloaded from http://www.everyspec.com

7.2.1 Radomes. Radomes are usually designed to be a multiple of a radar wavelength in thickness for transmission purposes. Ablation of the radome due to thermal pulses can degrade radar performance by reducing the radome thickness. Since electronic performance begins to be jeopardized only when the radome thickness loss becomes appreciable, radomes are not usually considered vulnerable to thermal radiation.

7.2.15 Aircrew. Aircrew incapacitation, resulting from exposure to thermal radiation, represents a significant hazard in operations near nuclear weapon detonations. Aircrew protection from thermal radiation is required to move toward achievement of a hardened aircraft, since aircrews are very vulnerable to certain thermal radiation levels. Applicable documents are MIL-A-19879, MIL-A-46108, MIL-A-46165, MIL-B-43366, MIL-C-12369, and MIL-STD-1288.

7.2.15.1 Skin burns. Although aircraft may not be catastrophically damaged by thermal radiation, the window areas may transmit damaging amounts of thermal radiation to aircrew members. Even when the window areas are facing away from a nuclear detonation, the occupants could be exposed to significant thermal radiation reflected from overcast or snow.

7.2.15.1.1 Skin burn types. The two types of skin burns are:

a. Flash burns caused by direct incidence of thermal radiation or by conduction of heat through the clothing to the skin.

b. Flame burns caused by ignition of clothing or other materials near the skin.

7.2.15.1.2 Skin burn classification. There are no sharp demarcation points to distinguish the following skin burn classifications. Within each group, the burn may be mild, moderate, or severe. Skin burn classifications are:

a. First-degree burn - produces only redness of the skin. A stinging pain may be experienced during the period of exposure. Healing occurs without special treatment or scarring. Moderate sunburn is an example of a first-degree burn.

b. Second-degree burn - is deeper and more severe than a first-degree burn, resulting in blister formation and possible scarring. The amount of pain experienced depends on the portions of the body affected. Severe sunburn is an example of a second-degree burn.

Downloaded from http://www.everyspec.com

c. Third-degree burn - destroys the full thickness of the skin (i.e., epidermis and dermis), producing pain and blistering. Although more severe than a second-degree burn, the pain encountered occurs only until the nerve endings in the derma are destroyed. Scar formation will occur at the site of injury unless skin grafting is employed.

7.2.15.1.3 Energy required to produce skin burns. A determination of potential thermal radiation injury from a nuclear detonation is based upon two types of data:

a. The amount of thermal radiation energy received from an explosion of a given yield at various distances from burst; this amount is dependent upon environmental and atmospheric conditions.

b. The radiant exposure required to produce burns of various types at various rates of energy delivery. A high dependency exists between delivery rates of thermal radiation and thermal energy required to produce skin burns.

Most skin burn data are based on exposures in which the subjects were in fixed positions. Actual situations would require greater radiant exposures to cause the same effect because voluntary or involuntary movement would occur. Stated energy values also will vary because of differences in factors which affect the severity of the burn, such as skin sensitivity and pigmentation. Darker skin requires less exposure to produce a given severity of burn and skin temperature.

7.2.15.2 Aircrew protection. To protect aircrew members from the deleterious effects of thermal radiation, the following techniques and practices can be used:

a. Construct cockpit accommodations from materials capable of withstanding the expected thermal radiation and protect the crew members by providing thermal protective outer garments and flash protection goggles or visors. Crew member protective clothing must necessarily cover all exposed skin. Equipment such as gloves, helmets, breathing apparatuses, and shoes should provide the same protection as thermal clothing. This technique has the disadvantage that cockpit console panels, instrument panels, controls. seats, cushions, wiring harnesses, cabin liners, ejection mechanisms, and other items in the cockpit will require hardening.

b. Surround the cockpit area with an automatically or manually deployable shield or hood. The thermal shield or hood must be adequately fitted to the cockpit to prevent direct light and thermal energy from entering the cockpit of the

Downloaded from http://www.everyspec.com

aircraft and striking any crew member when he is in any normally assigned area and the exterior of the aircraft. Cockpit shields traditionally have been constructed of flexible materials which conform to MIL-C-27347. Some thermal materials have low abrasion resistance and can be easily damaged during normal handling and inspection; the maintenance requirements for design including such materials should be carefully considered. In this approach, crew member field of view (FOV) may have to be traded off for comfort and maneuverability. Storage and erection space within the cockpit requires a compromise with other crew accommodations. The shield or hood should be capable of being erected in flight with minimum distraction to the crew. The design of the shield or hood should include a flashblindness protection system that provides the required visibility.

7.2.16 Helicopter rotor hubs. Helicopter rotor hubs and blade control subsystems, since they are exposed, may be vulnerable to the effects of the thermal pulse. This vulnerability is dependent upon hub and blade control subsystem design and may result in a prevent takeoff kill if brought to fruition. The vulnerability of such subsystems should be determined through testing. If a vulnerability fix is warranted, shielding may be the only viable alternative.

7.2.17 Helicopter blades. Helicopter blades which use composites in their construction should be tested to determine their vulnerability to thermal energy. If such blades cannot withstand a threat level pulse, they can be coated with a thermal barrier or replaced with blades of sufficiently low vulnerability.

7.2.18 Electro-optical and IR sensors. Electro-optical (EO) and IR sensors may be susceptible to nuclear thermal and light radiation. Since such sensors are usually used for target detection, they are mission critical and hence should be afforded protection. If the system is highly sensitive to threat levels of thermal or light radiation, it may be protected by a threat-activated shield. If the sensor device itself can withstand the threat, then the associated circuitry may require protection from being overdrive, MIL-C-675 is applicable.

7.2.19 Signature reduction coatings. Coatings and paints used for visual or IR signature suppression should be compromises between signature suppression and thermal radiation protection. Such coatings should have properties such that illumination by threat level thermal radiation will not cause a major degradation in signature suppression effectiveness. If detection signature suppression is degraded, aircraft which survive a nuclear environment will be more susceptible to conventional weapon threats if faced on subsequent missions. Applicable documents are MIL-C-83286 and MIL-P-23377.

Downloaded from http://www.everyspec.com

7.2.20 Thermal insulation. In situations which require thermally sensitive components of aircraft subsystems to be routed or located near thin skin or in places where they might be exposed to thermal radiation, protective shielding and insulation should be provided.

7.3 Nuclear radiations.

7.3.1 General characteristics. A nuclear detonation is accompanied by the emission of nuclear radiations consisting of gamma rays, X-rays, neutrons, beta particles, and a small proportion of alpha particles. The ranges which alpha and beta particles travel in air are short and, thus, these radiations do not significantly contribute to the threat presented to aircraft electronics. X-rays are also of no concern, generally, because they are absorbed by the atmosphere. Gamma, neutron and high energy X-ray radiation, however, can have serious effects on electronic equipment and aircrews. The word “transient” in Transient Radiation Effects on Electronics (TREE) refers to the nuclear radiation environment (radiation pulses lasting from ns to a few ms) and not to the duration of the effect which may be either transient or permanent.

7.3.1.1 General TREE characteristics. The initial nuclear radiations, specifically gamma rays and neutrons, can affect materials such as those used in electronics systems (e.g., inertial guidance). TREE from a nuclear explosion depends on the nature of the radiation absorbed and also on the specific component and often on the operating state of the system. The actual effects are determined by the characteristics of the circuits contained in the electronics package, the exact components present in the circuits, and the specific construction techniques and materials used in making the components.

7.3.1.2 Equipments affected. The term “electronics” as used in TREE may refer to any or all the following individual electronic component parts, component parts assembled into a circuit, and circuits combined to form a complete system. TREE studies may also include electromechanical components connected to the electronics (e.g., gyros, inertial instruments). Purely mechanical or structural components are excluded since they are much less sensitive to radiation than are components or systems that depend on electrical currents (or voltages) for their operation.

7.3.1.3 Types of effects. TREE may be temporary or more or less permanent. Even though the effects on a particular component may be temporary, these effects may result in permanent damage to some other part of a circuit. The component responses of short duration are usually the result of ionization caused by gamma radiation and are dependent upon the dose rate rather than the dose. The more permanent effects are generally, but not always, due to the displacement of atoms in a crystal lattice by high-energy neutrons. In such cases, the extent of damage is determined by the neutron fluence. When a permanent effect is produced in an electronic component by gamma radiation, the important quantity is usually the dose.

Downloaded from http://www.everyspec.com

7.3.2 Avionics subsystem.

7.3.2.1 Solid-state devices. Solid-state devices such as diodes, transistors, Integrated circuits (ICs) and microprocessors consist of semiconductor materials that are quite sensitive to nuclear radiations. Temporary effects are the production of spurious current pulses caused by gamma rays absorbed in the solid (this phenomenon is turned to advantage in the semiconductor nuclear radiation detectors). The strength of the current pulse is proportional to the dose rate of the radiation and is much greater in a transistor than in a diode because the primary current resulting from ionization produces an amplified secondary current in the transistor. Applicable documents are MIL-I-8700 and NAVMATINST 2410.1B.

7.3.2.1.1 Atomic displacement effects. Some of the changes caused by atomic displacements in a semiconductor disappear or anneal in a short time but others remain. Permanent changes in the physical properties of materials affect the operating characteristics of the component. In most cases, degradation in the current amplification (or gain) of transistors is the critical factor in determining the usefulness of electronic systems containing solid-state components.

7.3.2.1.2 Fast-neutron fluence effects. There is a wide variation in the response of transistors to radiation, even among electronic devices designed to perform similar functions. The decrease in gain may become unacceptable at fast-neutron fluences as small as 10″ or as large as 10″ (or more) n/cm^2. (Fast-neutron fluences are fission neutrons with energies exceeding 0.01 MeV). The structure of the device has an important influence on the radiation resistance of a transistor. As a general rule, a thin base, as in high-frequency devices, and a small junction area favor radiation resistance. For example, diffuse-junction transistors are significantly more resistant than alloy-junction devices because of the smaller junction area. Junction and especially thin-film field-effect transistors (FET) can be made that are quite resistant to radiation. Certain types of the latter have remained operational after exposure to a fast-neutron fluence of 10^{15} n/cm^2.

7.3.2.1.3 Gamma radiation effects. Damage in metal-oxide semiconductor (MOS) FET is caused primarily by gamma radiation rather than by neutrons; hence, the effects are reported in terms of the dose in rads (Si) or 10^{-2} J/kg(Si). The most sensitive parameter to radiation in these devices is the threshold voltage; that is, the value of the gate voltage for which current just starts to flow between the drain and the source. In general, gradual degradation, i.e., a shift of about 0.5 V in the threshold voltage, begins at about 10^3 rads (Si) (10 J/kg(Si)) and proceeds rapidly at higher doses. The sensitivity of MOS transistors to radiation is, however, dependent on the impurities in the gate oxide, With improvements in the technique for producing the oxide, the devices are expected to survive doses of 10^6 rads (Si) (10^4 J/kg(Si)). When dealing with solid-state devices, care must

Downloaded from http://www.everyspec.com

be taken to consider variations of device parameters and characteristics between manufacturers and manufacturing lot.

7.3.2.2 Intrinsic hardening. The prompt gamma and neutron effects in bipolar semiconductors are related to the frequency response of the device. The simplest of all hardening approaches for bipolar semiconductors is to utilize high -frequency (high switching speed) devices. Trade-offs may have to be made since increasing frequency decreases breakdown voltage with increase in vulnerability to EMP transients. Both the prompt gamma and neutron interactions are directly related to the junction area of bipolar transistors and diodes. In general, the active area is directly related to the power dissipation. For minimal radiation effects, the power rating of devices, particularly active devices, should be the minimum which will satisfy the power dissipation requirements. For prompt gammas, gold doping reduces the stored charge which results in faster recovery time. For neutrons, gold doping decreases the minority carrier lifetime which results in increased hardness.

7.3.2.3 Recovery time. Recovery time for circuits driven into saturation by prompt gamma radiation may be substantial. If improper operation of a component for this time is not critical, hardening is not necessary. If rapid recovery time is essential, determine the required recovery time and use it as a design criterion.

7.3.2.4 Burnout. Electrical burnout resulting from prompt gamma induced current surges are possible. Burnout problems can be solved by the addition of current limiting devices. An example of a vulnerable circuit is one in which transistors are connected in series across a power supply and controlled such that one is cut off while the other is conducting. A transient induced by prompt gamma will drive both transistors toward saturation and result in a low impedance, high current path through the transistors. Push-pull circuits and circuits using complementary NPN and PNP transistors are susceptible to the occurrence of this situation. Such circuit designs should not be used in equipments expected to be exposed to prompt gamma radiation.

7.3.2.5 Transistor minimum beta. The minimum required beta is that value of minimum gain required for transistor operation in a given circuit. It is determined in the initial circuit design phase or from hand or computer-aided analysis calculations where design tolerances are not readily available. Since the minimum design betas are circuit-dependent and rarely the same value, the circuit is uniquely defined and the first transistor whose neutron derated gain drops below this minimum gain identifies the most vulnerable circuit component.

7.3.2.6 Gamma dose rate. Gamma dose rate is the gamma ray energy absorbed per unit mass of a material per unit time. It is measured in rad (Si) per second (rad (Si)/s) or (10^2 J/kg(Si)/s). Gamma dose produces photocurrents

Downloaded from http://www.everyspec.com

in semiconductor devices and can cause transient circuit upset and, in rare instances, junction or circuit device latchup (i.e., the condition that exists when the output of a device no longer responds to changes in input). Gamma radiation environments will produce a photocurrent in proportion to the dose rate in transistors and diodes. Exposure of ICs provides individual photocurrents at each junction usually resulting in transients at the external leads. Radiation responses can be characterized by radiation test or by prediction techniques.

7.3.2.6.1 Circuit response. Circuit response to gamma dose rate environments is the combined action of the individual component responses. Potential circuit problems associated with gamma dose rate environments can be eliminated by careful component selection and circuit design. Circuit hardness can be verified by hand or by computer-aided analysis. Hand analysis is readily performed by design personnel, but the hand-predicted response of sophisticated circuits may be erroneous due to the high-speed responses of the components. A computerized prediction method is dictated in these cases.

7.3.2.6.2 Component selection criteria. When developing the initial circuit configuration during preliminary design, component selection is the primary approach for hardening circuits to gamma dose rate effects. Component types that are highly susceptible to gamma dose rate and produce either large photocurrents or long transient upset times should be avoided. The following component types are described in the context of their gamma dose rate susceptible ranges.

7.3.2.6.2.1 Diodes. Test data for a representative group of diodes exposed to 10^8 rad (Si)/s (10^6 J/kg (Si)/s) indicate a range of equilibrium photocurrents from 0.1 to 270 mA. Power signal diodes exhibit photocurrents from 60 to 270 mA. The generation of photocurrents in diodes generally results in transient effects due to the creation of excess-charge carriers (ionization) which causes linear increasing photocurrent magnitude up to 10^{10} rad (Si)/s (10^8 J/kg (Si)/s) peak. The changes are usually of such short duration (about 1 s) that surge ratings of the diode more than preclude their effects. Application of diodes in circuits should be considered relative to the photocurrent impact on other components.

7.3.2.6.2.2 Transistors. Photocurrents for low-and medium-power transistors range from 1 to 200 mA for a gamma dose rate of 10^8 rad (Si)/s (106 J/kg (Si)/s) for less than 10µs. Power transistors generate photocurrents on the order of 200 mA to 10 A for durations of about 10 to 50µs. Transistors should be given careful consideration relative to the linear increasing photocurrent magnitude up to 10^{10} rad (Si)/s (10^8 J/kg (Si)/s) peak and the impact on other components in a circuit. Burnout can occur at levels greater than 10^{10} rad (Si)/s (10^8 J/kg (Si)/s) but should not be a problem at aircraft hardening levels.

Downloaded from http://www.everyspec.com

7.3.2.6.2.3 Integrated circuits. Both digital, including medium-and large-scale integrated (MSI and LSI), and linear ICs experience transient upsets when exposed to ionizing dose rate levels. On the basis of known radiation data, digital devices (bipolar and MOSFET) will experience a transient upset lasting from 1 to 5μs at the specified radiation level and will not latch up or burn out at an" order of magnitude higher. However, there are certain classes of ICs whose operation is dependent upon receiving an external input in a proper time sequence. These include such devices as:

a. Multi vibration-type circuits.
   (1) Flip-flops.
   (2) Bi-stable latches.
   (3) One-shots.

b. Memories.
   (1) Read-only.
   (2) Random access.

All of these device types will probably experience a change of state or false triggering due to gamma dose rate environments and will return to normal operating conditions as a function of clock frequency or response time of external resetting circuitry. Hardness is insured by verifying that no circuits of this type remain in an incorrect state after being exposed to the specified gamma dose rate environment. Linear ICs will experience transient upsets lasting from 60 to 100μs, with no latchup or burnout at the gamma dose rate levels consistent with aircraft hardening specifications. It should be verified that the transient upset does not exceed the allowable system transient upset time.

7.3.2.6.2.4 Unijunction transistors. Unijunction transistors (UJTs) exhibit similar gamma dose rate behavior as the junction field-effect transistors (JFET) and MOSFET devices depending on whether the UJT construction process is the monolithic PN junction type or the common bar type construction. This PN process for UJTs not only has low susceptibility to gamma dose rate, but also to neutron environments up to 10^{13} n/cm^2 before parameters begin to change.

7.3.2.6.2.5 Silicon-controlled rectifiers. Silicon-controlled rectifiers (SCRs) will exhibit turn-on of the gate due to photocurrent generation in the device. Either turn-off circuitry must be designed to reset the device or the SCR should be used only in an AC switching signal mode of operation.

7.3.2.6.2.6 Purchased subassemblies. Purchased subassemblies containing electronic components should be avoided unless the TREE designer can identify the subassembly components and circuit design and can control the component selection, circuit design, and production process to satisfy the requirements of the gamma dose rate specification or expectation.

Downloaded from http://www.everyspec.com

7.3.2.6.2.7 Special electronic devices. Many devices will be required in the equipment design which may not have previously been characterized for operation in the nuclear radiation environment. Included in this category are such devices as crystals, photocouplers, transducers, cathode-ray tube (CRT) displays, special-purpose vacuum tubes, electronic switches, and wave guides. Gamma dose rate testing should be conducted to obtain transient response data on special electronic devices.

7.3.2.6.2.8 Preferred parts list. The foregoing component selection criteria can be combined with existing component radiation data and the analytical predictions of component response to prepare a preferred parts list for the design of electronic subsystems.

7.3.2.7 Neutron fluence. Neutron fluence is a measure of neutron energy intensity, n/cm^2. Neutron interaction within the lattice of semiconductor material causes the atoms to be displaced by inelastic collisions. The resulting change of electrical parameters can be critical to circuit function and must be considered when hardening circuits. The response of circuits and circuit components to neutron environments can be determined by radiation tests or by analysis techniques. Potential circuit problems associated with the neutron fluence environments can be eliminated by selecting components that do not degrade in the specified neutron environment (i.e., inherently hard components) or by derating circuits to accommodate expected changes. Circuit hardness can be verified by test data, beta degradation prediction techniques, and for the limited case of transistor circuits by computer-aided analysis.

7.3.2.7.1 Component selection criteria. Component selection within the context of circuit application is the primary hardening approach for neutron effects. Component types that are highly susceptible to neutrons and experience large gain degradations should be avoided. The following components are described in the context of their neutron susceptibility ranges.

7.3.2.7.1.1 Diodes. Signal diodes and rectifiers show very little parameter degradation up to neutron fluence levels ranging from 10^{13} to 10^{15} n/cm^2. Degradation results from an increase in forward voltage at a constant current. The aforementioned wide variations in the fluence levels is due to differences in device geometries and construction processes. In general, diodes are an order of magnitude more radiation-resistant than transistors of a similar power rating. For fluence levels within the critical range, components should be selected on the basis of existing data.

7.3.2.7.1.2 Transistors. Transistors (In particular, power transistors) are the most vulnerable components in the neutron radiation environment. The most critical parameter, beta or h_{fe}, can degrade at fairly low neutron

Downloaded from http://www.everyspec.com

fluence levels to the point where the transistor will no longer operate. Power transistors present a special problem because the characteristics of the large base width prevent a sufficiently valid prediction technique to insure design hardness. Beta degradation can occur at fluence levels as low as 10" n/cm^2, and depending on required circuit beta, the circuit can be completely inoperative at 10^{13} n/cm^2. Power transistors can readily be hardened to the specified radiation levels by a combination of component test data. Minimum power (less than 5 W) and switching transistors in general are an order of magnitude harder than power transistors. They are primarily hardened by the application of prediction techniques and beta derating with testing required for those devices whose initial parameters exceed the limitations of the prediction technique.

7.3.2.7.1.3 Integrated circuits. ICs fall into two categories - digital and linear. Due to the number of different types of devices and their inherent neutron hardness, neutron hardness prediction techniques may not be available. In general, bipolar digital ICs, including MSI/LSI and Shottky-type devices, begin to degrade (fan-out reduction) at 10^{13} and can fail at 10" n/cm^2. Fan-out reduction is required for device operation at these high fluence levels. Linear ICs (operational amplifiers and voltage regulators) will experience changes in critical design parameters (i.e., offset voltage, bias current) at about 5 x 10^{12} n/cm^2, which, in most cases, are within the operating limits set by the device manufacturer. Linear ICs experience complete failure anywhere from 10^{13} to 10^{14} n/cm^2. Selection is primarily made on the basis of test data and, in circuits where small variations of critical design parameters cannot be tolerated, an analysis of possible effects on circuit operation should be made.

7.3.2.7.1.4 Silicon-controlled rectifiers. SCRs are the most vulnerable of the diode-type devices to the neutron environment. At fluence levels greater than 5 x 10^{11} n/cm^2, SCR operation is marginal and radiation testing is recommended. SCR selection is based on test data and circuit design limitations. Special SCRs with tight tolerances on operating specifications should be avoided at fluence levels above 10^{12} n/cm^2.

7.3.2.7.1.5 Field-effect transistors. Junction and MOS transistors show little or no degradation at fluence levels of the same order of magnitude as bipolar (digital) IC devices. The N- channel JFETs degrade less than their P- channel counterparts. In a neutron environment, the permanent degradation is inversely proportional to the channel doping. At doping levels above 10^{16} impurity $atoms/cm^2$, minimal effects are noted at fluence levels of 10^{13} n/cm^2. Where low doping levels are used or in higher fluence levels, the degradation in transconductance (gin) and IGSS can be computed based on physical parameters.

7.3.2.7.1.6 Hybrids and special subassemblies. Packaged devices which consist of a number of different electronic components have no better

Downloaded from http://www.everyspec.com

tolerance to neutrons than the most vulnerable component. If sufficient data on device response do not exist, hybrids and subassemblies should be avoided.

7.3.2.7.1.7 Special components. Active electronic devices and components, with the exception of transformers and transformer-type devices, not mentioned in 7.3.2.7.1.6, should be avoided unless there is sufficient data available to verify hardness levels.

7.3.2.7.1.8 Preferred parts list. The foregoing component selection criteria can be combined with existing component neutron test data and the analytical predictions of component response to prepare a preferred parts list for the design of electronic subsystems.

7.3.2.8 Total ionizing dose. Ionizing dose radiation is the radiation energy absorbed per unit mass of material, or the time-integrated absorbed-dose rate. For electronics, it is measured in rad (St) or 10-2 J/kg (Si). Nuclear radiation ionizes gas molecules and foreign particles near the surface of an electronic device and, in time, the accumulation of charge can cause permanent damage. Specific examples are chemical effects, long-term carrier trapping, and space charge effects in insulators. Total ionizing doses at levels consistent with aircraft specifications affect certain types of devices such as MOSFETs and MSI/LSI devices that contain MOSFETs. Potential circuit problems associated with the total dose radiation environment can be anticipated in these devices and eliminated by selecting components that do not degrade circuit performance to unacceptable levels.

7.3.2.8.1 Component selection criteria. The electrical response of MOSFET type devices to total ionizing dose radiation is dependent on process type and variations within a given process used by different MOSFET manufacturers. The two primary failure modes, however, associated with MOSFET devices are:

a. Shifts in threshold voltage (V_{th}) - Failure occurs in MOSFETs when Vth shifts or decreases to the maximum available negative (i.e., supply voltage in P– channel devices and lowest positive voltage, O V, in N- channel devices) gate source voltage. Device failure occurs rapidly at a given dose level and is identified by a P- channel device that will not turn on (or an N-channel device that will not turn off) without changing operating voltage levels.

b. Increases in leakage current (I_D) - Prior to failure due to shifts in threshold voltage, drain currents in N- channel devices (including complementary metal-oxide semiconductor (CMOS) can increase significantly when they are not switch ing (i.e., standby mode). Existing data on leakage in

Downloaded from http://www.everyspec.com

N- channels of CMOS ICs indicate that leakage current becomes significant at a factor of two less than the threshold failure level. Failure of this type can over load available MOSFET power supplies.

Device degradation severe enough to cause circuit malfunctions can occur at total dose levels ranging from 5000 rad (Si) or 50 J/kg (Si) for some of the older devices to 10,000 rad (Si) or 100 J/kg (Si) for the newer devices. The primary method of insuring device hardness is by component selection based on test data. Some selection on the basis of results extrapolated from known data to apply to untested devices is possible if the untested devices are constructed by the same process and manufacturer. The development of methods for predicting failure is recommended when the required test data become available. One problem associated with MOSFET device selection is that, after selecting a suitable hardened device, the manufacturer may discontinue the line because of the development of a better process. If production of a device is discontinued, requalification of the substitute device is required. Guidelines for selecting MOSFET devices are summarized, as follows:

a. Select components on the basis of known test data of significant sample size.

b. Select complex components the basis of known data for simple components made by the same process and manufacturer. Degrade known failure levels by a factor of 5.

c. Select CMOS on the basis of known data and degrade failure level by a factor of 2 to take increased leakage currents into consideration.

d. Test any component that shows a failure level close to the total dose requirement after degradation.

e. Test any untested component produced by a new technology or not specifically included in the guidelines.

f. Evaluate degradation of critical parameters (V_{th}, I_D) in terms of circuit constraints. Component substitution should be made if any circuit constraints are exceeded at the required total ionizing dose level.

7.3.2.9 Vacuum tubes. The principal transient effect in vacuum tubes arises from the Compton electrons ejected by gamma rays from the structural parts of the tube into the evacuated region. These electrons are too energetic to be significantly influenced by the electric fields in the tube. However, their impact on the interior surfaces of the tube produces low-energy secondary electrons that can be affected by the existing electric fields, and, as a result, the operating characteristics of the tube can be altered temporarily. The grid is particularly sensitive to this phenomenon; if it

Downloaded from http://www.everyspec.com

suffers a net loss of electrons, its voltage will become more positive and there is a transient increase in the plate current. Large fluences of thermal neutrons, (e.g., 10^{16} n/cm^2) can cause permanent damage to vacuum tubes as a consequence of mechanical failure of the glass envelope. But, at distances from a nuclear explosion at which such fluences might be experienced, blast and fire damage would be dominant.

7.3.2.9.1 Thyratrons. Gas-filled tubes (thyratrons) exposed to gamma radiation exhibit a transient, spurious firing due to partial ionization of the gas, usually xenon. Additional ionization is caused by collisions between ions and neutral molecules in the gas. As with vacuum tubes, large fluences of thermal neutrons can cause thyratrons to become useless as a result of breakage of the glass envelope or failure of glass-to-metal seals.

7.3.2.10 Capacitors. Nuclear radiation affects the electrical properties of capacitors to some extent. Changes in the capacitance value, dissipation factor, and leakage resistance have been observed as a consequence of exposure. The effects are generally not considered to be severe for fast-neutron fluences less than 10^{15} n/cm^2. During a high-intensity pulse of nuclear radiation, the most pronounced effect in a capacitor is a transient change in the conductivity of the dielectric (insulating) material with a corresponding increase in the leakage currents through the capacitor.

7.3.2.11 Resistors. Radiation effects in resistors are generally small compared with those in semiconductors and capacitors and are usually negligible. However, in circuits requiring high-precision carbon resistors, transient effects may be significant at gamma dose rates of 107 rads (C)/s or 10^5 J/kg (C)/s and at fast-neutron fluences of 10^{11} n/cm^2. The transient effects are generally attributed to gamma rays that interact with materials to produce electrons; however, energetic neutrons can also cause significant ionization by recoiling nuclei. The transient effects on resistors include:

a. A change in the effective resistance due to leakage in the Insulating material and the surrounding medium.

b. Induced current that is the result of the difference between the emission and absorption of secondary electrons by the resistor materials.

The permanent effects are generally due to the displacement of atoms by neutrons, thereby causing a change in the resistivity of the material.

7.3.2.12 Cables and wiring. It has been recognized for some time that intense pulses of radiation produce significant perturbation in electrical cables and wiring, including coaxial and triaxial signal cables. Even with no voltage applied to a cable, a signal is observed when the cable is exposed

Downloaded from http://www.everyspec.com

to a radiation pulse. The current associated with this signal is defined as a replacement current, since it is a current in an external circuit that is apparently necessary to replace electrons or other charged particles that are knocked out of their usual positions by the radiation. In addition, there is a signal, attributed to what is called the conduction current, which varies with the voltage applied to the cable. It is ascribed to the conductivity induced in the insulating dielectric by the radiation. However, the conductivity current may also include substantial contributions from changes in the dielectric material, These can usually be identified by their gradual disappearance (saturation) after repeated exposures and by their reappearance after additional exposures in which there is a considerable change in the applied voltage (e.g., it is removed or reversed).

7.3.2.12.1 Temporary and permanent effects. Nuclear radiation can have both temporary and permanent effects on the insulating material of cables. If ionization occurs in the material, the free electrons-produced contribute to its conductivity. Hence, insulators are expected to have a temporary enhancement of conductivity in an ionizing radiation environment. Conduction in the insulator is frequently characterized by two components:

a. For very short radiation pulses, a prompt component whose magnitude is a function of only the instantaneous exposure rate.

b. Frequently, at the end of the short radiation exposure, a delayed component having approximately exponential decay (i.e., rapid decay at first and then more and more slowly).

Permanent damage effects in cables and wiring are apparent as changes in the electrical properties of the insulating materials. When such damage becomes appreciable (e.g., when the resistance is reduced severely), electrical characteristics may be affected. The extent of the damage to insulating materials Increases with the neutron fluence (or gamma-ray dose), humidity, and irradiation temperature. Certain types of insulation are quite susceptible to permanent damage. For example, silicon rubber is severely cracked and powdered by a fluence of 2 x 10^{15} fast n/cm^2. The approximate gamma radiation damage thresholds for three common types of cable insulation are: polyethylene, 1 x 10^7 rads (C) or 10^5 J/kg (C); Teflon TFE, 1 x 10^4 rads (C) or 10^2 J/kg (C); and Teflon FEB, 2 x 10^6 rads (C) or 2 x 10^4 J/kg (C). On the other hand, some irradiated polyolefins are capable of withstanding up to 5 x 10^9 rads (C) or 5 x 10^7 J/kg (C). A considerable degree of recovery has been observed with respect to insulation resistance; this implies the possibility of adequate electrical serviceability after moderate physical damage.

7.3.2.13 Batteries. Batteries are affected much less by radiation than other components. The effects of radiation on nickel-cadmium

Downloaded from http://www.everyspec.com

batteries appear to be insignificant at gamma-ray dose rates up to 10^3 rads (air)/s or 10 J/kg (air)/s. No radiation damage was apparent in a number of batteries and standard cells that were subjected to 10^{13} fast n/cm2. Mercury batteries can withstand fast neutron fluences up to 10^{16} n/cm^2.

7.3.3 Fuel subsystem. A number of conventional hydrocarbon fuels are produced for aircraft propulsion systems. These are aviation gasoline (MIL-G-5572); jet fuel grades JP-4 and JP-5 (MIL-T-5624); and aviation kerosene, JP-8 (MIL-T-83133). Although these fuels can be affected by gamma radiation, the level of radiation required to achieve any significant change in the fuel properties is well beyond the values where crew and avionic equipment are seriously affected. The fuel tankage and avionics should be so located to provide maximum shielding from prompt nuclear radiation effects. Other applicable documents are MIL-B-83054, MIL-F-38363, MIL-H-7061, MIL-H-18288, MIL-S-8802, MIL-T-5578, MIL-T-25783, MIL-T-27422, and MIL-HDBK-221(WP).

7.3.4 Flight control subsystem. Electronics used for flight control system stability augmentation or automatic flight control functions are susceptible to prompt radiation effects. Mechanically coupled or fluidic operated systems may be usable for stability or automatic flight control systems. Consider these alternates where avionic systems cannot achieve the required survival levels or would impose heavier penalties to the specific vehicle. Where hazardous or unacceptable vehicle maneuvers or attitudes may occur due to prompt radiation or EMP effects on the stability augmentation or automatic flight control system, provide a monitoring system that will cause the system to disengage or fail safe and allow the pilot to maintain control. Applicable documents are MIL-D-81980, MIL-F-8785, MIL-F-9490, MIL-F-18372, MIL-F-83300, and MIL-H-8501.

7.3.5 Hydraulic subsystem. Consider the effects of nuclear radiation upon the characteristics of metallic materials that may be subjected to high repeated stress levels. Radiation will affect fatigue strength by causing the material to become essentially more brittle. Use adequate stress margins to ensure component integrity. Consider thermal and radiation effects on critical nonmetallic elements such as seals and filters. Elastomers and plastics are especially sensitive to radiation effects. Teflon, for example, suffers 25% loss in strength at radiation levels of 3.7 x 10^5 rads (air) or 3.7 x 10^3 J/kg (air). Consider using metallic seals or elements where plastic or elastomer materials will not provide the properties needed to withstand an otherwise survivable nuclear detonation. Applicable documents are MIL-H-5440, MIL-H-5606, MIL-H-8890, MIL-H-8891, and MIL-H-83282.

7.3.6 Pneumatic subsystem. Avoid using nonmetallic materials such as Teflon that lose strength at relatively low nuclear radiation levels.

Downloaded from http://www.everyspec.com

7.3.7 Electrical subsystem. The materials and construction of electrical components and distribution systems are generally resistant to nuclear detonation effects except for electronic elements. Avoid using nonmetallic materials for applications where loss of strength due to nuclear radiation effects will result in system failure or malfunction. Avoid using electronic control circuitry for electrical systems operation susceptible to failure or malfunction from nuclear radiation or EMP effects. Consider the effects of air ionization due to radiation effects which may cause equipment short circuits which in turn would cause system malfunctions or failures. Provide automatic reset of essential circuits if such conditions cannot be avoided. Use batteries for emergency circuit power since they are not significantly affected by nuclear radiation hazards. Select electrical wiring insulation resistant to radiation or thermal effects to prevent short circuits or generation of smoke or toxic fumes. Applicable documents are MIL-E-25499, MIL-STD-461, MIL-STD-462, MIL-HDBK-235, MIL-HDBK-238, and AFSC DH 1-4.

7.3.8 Environmental control subsystem. The majority of elements and components in environmental control systems are relatively insensitive to the level of direct nuclear weapon effects that an aircraft can be expected to survive, with the exception of electronic sensing and control elements. This type of equipment is susceptible to failure or malfunction from prompt radiation effects. Filters in the system to collect radioactive particles from the air should be located so as not to be a source of radiation to crew members. Applicable documents are MIL-B-81365, MIL-E-18927, MIL-E-38453, and MIL-H-18325.

7.39 Refueling probe. Seals and gaskets used in refueling probes should be fashioned from materials which will not become brittle and lose flexibility due to nuclear weapon radiation effects.

7.3.10 Aircrew. Studies have indicated that:

a. For most aircraft burst orientations, the amount of natural shielding afforded crewmembers and components from nuclear radiation by the aircraft structure and surrounding equipment is insignificant.

b. The addition of shielding is not practical because of the weight penalties incurred.

An equipment box 0.5 x 0.5 x 1.0 ft or 0.152 x 0.152 x 0.305 m (2.5 ft^2 or 0.232 m^2 surface area) shielding to a reduction factor of 10 from 1 MeV gamma radiation would require a thickness of 1.45 in (3.7 cm) of lead. This will result in a weight impact of 220 lb (100.9 kg). A typical electronic equipment box occupying this volume (0.25 ft^3 (0.007 m^3)) would normally weigh 10 to 20 lb (4.5 to 9.1 kg). This demonstrates that gamma radiation shielding would be a very high price to pay as a hardening technique. Shielding of a small equipment box to reduce gamma radiation by even

Downloaded from http://www.everyspec.com

one-tenth can involve the use of several hundred pounds. Thus, gamma-ray shielding should be considered only as a last resort because of the excessive weight penalties that would result. Applicable documents are MIL-A-46103, MIL-A-46166, MIL-C-18491, MIL-C-27347, MIL-I-8675, MIL-S-46099, and MIL-STD-1288.

7.3.11 Inherent shielding. An aircraft provides some natural shielding of crew and equipment from nuclear radiation. The amount of shielding varies with:

a. Type of aircraft - A light aircraft or helicopter provides little or no shielding except for fuel tanks. Larger air craft (transport or cargo type) will provide additional protection in areas shielded by cargo and equipment.

b. Time into the mission - The amount of fuel, cargo, and weapons on board the aircraft contributes to the natural shielding, and it depends on time into the mission.

c. Component location - Natural shielding can be increased for a component, for example, by locating it behind fuel or cargo.

d. Orientation of the weapon burst relative to the aircraft - The amount of shielding depends on the direction of the incident radiation.

In a combat environment, nuclear bursts may occur at any angle with respect to an aircraft. The angles over which shielding is effective are relatively small, even for a large strategic type aircraft. In addition, interactions of both gamma rays and neutrons with aircraft materials will cause a buildup of these radiations to significantly higher levels. Therefore, natural (inherent) shielding for gamma and neutron radiation does not generally contribute to reducing aircraft vulnerability, but some limited protection might be provided to small components by selective location,

7.3.12 Interaction of gamma rays with matter. Gamma rays interact with matter primarily in the following three ways:

a. Photoelectric effect - At low gamma-ray energies, the photo electric effect is the predominant absorption process, with the absorption of gamma rays varying with the energy of the gamma ray. A gamma ray interacts with an orbital electron of an atom, transferring all of its energy to the electron by ejecting the electron from the atom or raising it to a higher energy state. The cross section (probability that such a reaction will occur) for the photoelectric effect is larger for the heavy elements, varying as the third to fifth power of the atomic number, depending on the energy of the gamma ray.

Downloaded from http://www.everyspec.com

b. Compton scattering - This process becomes important for gamma rays having energies greater than the binding energies of electrons with the nucleus. In this process, the gamma photons behave in a manner analogous to small particles undergoing billiard ball-type collisions with electrons. A gamma photon collides with an electron, and a secondary photon with less energy departs at an angle to the direction of motion of the initial photon.

c. Pair production - This process becomes important at gamma-ray energies greater than 1.02 MeV. In the coulomb field of a nucleus and, less frequently, that of an electron, a high-energy photon can give rise to the production of a pair of electrons, equally but oppositely charged. Both the positive electron and the negative electron are annihilated to form two photons, each having an energy of at least 0.51 MeV. In some cases, if the interaction takes place near the nucleus of a heavy atom, only one photon of about 1.02 MeV may be created.

The probability that any one of the three foregoing processes will occur is related to the material properties and the energy of the incident gamma ray. When detailed shielding calculations are justified, the gamma-ray energy spectrum must be known and the energy dependency of the three foregoing processes taken into account.

7.3.13 Interaction of neutrons with matter. Neutrons interact with matter in one or more of the following ways:

a. Elastically - This scattering reaction is important for neutron energies ranging from a few hundred keV to a few MeV. The neutron interacts with the nucleus of an atom and is scattered away from its original direction.

b. Inelastically - This scattering reaction begins at a neutron energy of about 2.5 MeV and becomes important at an energy of about 10 MeV. The neutron interacts with the nucleus, leaving the latter in an excited (high-energy) state. The original neutron is scattered with degraded energy, and the excited nucleus can return to its normal energy (ground) state with the subsequent emission of a gamma ray.

c. Nonelastically - This scattering reaction begins at neutron energies of about 5 MeV and, like inelastic scattering, becomes important at an energy of about MeV. Nonelastic scattering refers to reactions with the nucleus which result in the emission of particles other than a single neutron.

Downloaded from http://www.everyspec.com

d. By capture - This type of reaction is more prominent at very low energies, but several materials have reasonable probabilities for capture at energies of a few hundred keV. The neutron is stopped or captured by the nucleus of the material. There are a variety of capture reactions, most of which result in the subsequent emission of a charged particle (generally a proton or alpha particle) or a gamma ray.

e. Fission - This phenomenon forms the basis for the practical utilization of atomic energy - the splitting of an atomic nucleus, by neutron bombardment, to release large amounts of energy.

Beyond a few hundred yards from the point of detonation, the reduction in neutron intensity is approximately uniform across the neutron spectrum for various energy neutrons. A shield composed of 27 percent lead and 73 percent water, 14.5 cm thick, could be expected to attenuate a fission spectrum to one-tenth of the original intensity. A shield of this composition (approximate density of 237 lb/ft^3 or 379.6 kg/m^3), 14.5 cm thick, surrounding an electronic-equipment box (1.9 ft^3 or 0.05 m^3) would weigh approximately 450 lb (204.12 kg). If a shield is being designed for aircraft use, a hydrogenous material such as paraffin may be substituted for water. Fuel also has application for neutron shielding. As was indicated for gamma-ray shielding, neutron shielding as a hardening method should be considered only as a last resort because of the exorbitant weight penalties.

7.3.14 <u>The disposition of contaminated surviving aircraft.</u> Exposure of aircraft to nuclear weapon environments can result in radioactive contamination of the aircraft by the debris (fission products) and by the neutron activation of the aircraft materials to the extent that maintenance and crew personnel could be exposed to hazardous radiation levels.

7.3.14.1 <u>Contamination.</u> An aircraft in a nuclear warfare environment may become contaminated with radioactivity from two sources:

a. The radioactive fallout debris.
b. Neutron-induced radioactivity in the materials of the aircraft.

The pertinent characteristics of the radiation dose rates and the time decay of the radiation from these two sources are discussed in 7.3.14.1.1 and 7.3.14.1.2.

7.3.14.1.1 <u>Debris/fallout.</u> Fallout is radioactive debris which is deposited on the earth after being airborne. The debris includes the fission products from the weapon and neutron-induced radioisotopes from weapon material and, in the case of a near-surface burst, from induced activity in the ground materials. The local fallout may be defined as that which is

Downloaded from http://www.everyspec.com

complete within 24 hr and consists of the larger particulate matter which has a high rate of settling. The radiation intensity and distribution of fallout vary appreciably with such parameters as the altitude of the detonation, the terrain, and the meteorological conditions. The early fallout consists primarily of fission products. The general rule for the decay of the fission product mixture is that for every sevenfold increase in time after detonation, the dose rate decreases by a factor of 10. For example, if the radiation dose rate at 1 hr after detonation is taken as a reference, then at 7 hr after, the dose rate will have decreased to one-tenth; at 7 x 7 = 49 hr (2 days), it will be one-hundredth; and at 49 x 7 = 343 hr (2 weeks), the dose rate will be approximately one-thousandth of that at 1 hr after the burst. It is not expected, however, that an aircraft with a clean surface, especially if in flight, would have an appreciable amount of fallout debris collected on its surface.

7.3.14.1.2 Neutron-induced radioactivity. When neutrons are incident upon materials, such as aircraft skins and structural members, they may interact in several different types of processes. In the scattering processes, the neutron interacts with a target nucleus and emerges with an altered energy, but the target maintains its original nuclear identity. In the capture- or reaction-type process, the neutron interacts with a target nucleus to form a compound nucleus which promptly emits some other nuclear particle, leaving the remaining nucleus different from the original target. The reaction product generally will be radioactive and will decay by emitting energetic nuclear radiation.

7.3.14.2 Radiation hazards. The radiation hazards due to a contaminated, surviving aircraft discussed here are concerned with servicing or maintenance personnel. Prior to any service or maintenance action, radiological safety personnel equipped with R- meters and dosimeters should monitor the dose rate and assess the hazards. While the situation of nuclear warfare may impose some unique rules regarding radiation exposure, the hazard can be related to guidelines for occupational exposure. In brief, these guidelines are that a total body radiation dose of 5 R (13.0 x 10^{-4} C/kg) per year should not be exceeded. A once-in-a-lifetime emergency dose of 25 R (65.0 x 10^{-4} C/kg) is allowed. The allowable dose to the extremities, such as hands and feet, is several times that allowed to the total body or main body organs. That is, a person may work with his hands outstretched in a region of higher dose rate than allowed for his body. The best practice, of course, is to minimize the radiation exposure. It is evident from the discussion on contamination that the decay of the radioactive material is rapid in the early times after detonation, and that a waiting period of approximately 2 hr will greatly reduce the hazard. The time of work in a radiation field should be minimized by rotating personnel, if possible. Also, when several contaminated aircraft are at the same site, it would be best to locate them as far apart from each other as possible. At distances of the order of the aircraft dimensions, the contaminated aircraft would appear to be point sources and the radiation dose rate would reduce appreciably with increasing distance d, nearly as the $1/d^2$ rule.

Downloaded from http://www.everyspec.com

7.3.14.2.1 Decontamination. Decontamination of an aircraft is only possible for the fallout portion of contamination. The particulate matter can be washed off by spraying with water. In this procedure, the service personnel should wear protective covering gear that prohibits any skin contact with the fallout. A face mask or filter to prohibit ingestion of the fallout particles should also be used. The dispersement of the wash water should be controlled by the cognizant safety monitor to assure that this does not create an additional contamination problem. If the aircraft skin was clean (e.g., no grease or oil smudges) prior to its exposure to the fallout field, the amount of fallout contamination should be negligible, especially if it was in flight at the time. The induced radioactivity in the aircraft should not create a severe hazard to personnel as long as the contamination problem is known to exist and is monitored and controlled. For example, at 1 hr after receipt of the neutron pulse, the general dose rate about the aircraft would be of the order of 100 mR/hr (260 C/kg/hr) or 0.1 R/hr (0.26 C/kg/hr). This would allow up to 50 hr of such exposure in 1 year to controlled service personnel; however, much less than this is desirable.

7.4 Electromagentic pulse.

7.4.1 General phenomena and effects description. The EMP following a nuclear detonation is comprised of intense transient electric and magnetic fields with very short rise times and a frequency spectrum extending from almost zero to 100 MHz. The EMP produced by a nuclear detonation has characteristics depending upon the altitude of the detonation, the location of the system in relation to the burst point, and the design of the nuclear weapon. Dependence upon location is caused by variation of the earth’s magnetic field as a function of location, dependence upon weapon size is due to gamma radiation production as a function of weapon size, and dependence upon height of burst is due to the variation of air density with altitude. The EMP threat increases with weapon size and its area coverage of the earth with increasing height of burst. The field intensity seen on the ground is not constant over the coverage area and varies from small areas of minimum and maximum field strength to larger areas of intermediate and strong field strength levels. There are two basic types of bursts producing two different types of EMP environments: Ground-burst and air-burst EMP (from 0.3 to 30 km) and high-altitude (above 30 km) burst EMP. Ground and air bursts up to 30 km produce intense fields in the source region, but these fields cover a relatively small area. However, high-altitude bursts can produce significant fields over wide geographical areas. This type of environment poses the greatest EMP threat to aircraft. For example, if a nuclear detonation occurred at an altitude of 240 miles over the middle of the United States, the entire continental United States would be encompassed by EMP. Aircraft flying through this environment may encounter large RF currents on the aircraft skin. Ground and air-burst EMP and high-altitude burst EMP all present a threat that must be considered in aircraft design. These large RF skin currents could couple currents and voltages into wire bundles of sensitive

Downloaded from http://www.everyspec.com

electronics equipment, resulting in damage to the equipment. The latest developments in advanced aircraft technology have resulted in sophisticated electronics, such as computer-directed navigation systems. Such sensitive electronics systems must be protected against EMP if they are to be fully operational in an EMP environment. Degradation of electrical and electronic system performance as a result of exposure to the EMP may consist of functional damage or operational upset. Functional damage is a catastrophic failure that is permanent; examples are burnout of a device or component, such as a fuse or a transistor, and inability of a component or subsystem to execute its entire range of functions. Operational upset is a temporary impairment which may deny use of a piece of equipment from a fraction of a second to several hours. Change of state in switches and in flip-flop circuits is an example of operational upset. The amount of EMP energy required to cause operational upset is generally a few orders of magnitude smaller than for functional damage. For additional EMP information, applicable documents are:

a. DNA 2114H- 1 through -6, EMP (Electromagnetic Pulse) Handbook:

Volume 1 Design Principles.
2 Coupling Analysis.
3 Component Response and Test Methods.
4 Environment and Applications.
5 Resources.
6 Computer Codes.

b. AFWL TR 73-68 Technical Report: Electromagnetic Pulse Handbook for Missiles and Aircraft in Flight.

c. AFWL TR 86-401 Technical Report: EMP Interaction; Principal Techniques and Reference Data.

d. Ricketts, Bridges, and Miletta Textbook: EMP Radiation and Protective Techniques.

7.4.1.1 Modes of entry. The modes of entry of RF energy associated with the EMP are summarized. The one (or ones) which will be predominant is dependent upon the type of system or aircraft being considered:

a. Direct Field Penetration - EM fields penetrating through apertures, surrounding sheaths or structure, or cracks in shielding.

b. Secondary Coupling Interaction of the free field EMP wave with the aircraft causing currents and charge densities on the aircraft skin or exposed conductors which couples with or is conveyed to cables and conductors within the aircraft.

Downloaded from http://www.everyspec.com

c. Deliberate Antennas - RF energy from the EMP being picked up by deliberate antennas (radio detecting and ranging (radar) and radio) and being conveyed to Internal electronic circuits.

7.4.1.2 Energy collection. The manner in which the EM energy is coupled to an aircraft is complex because much depends on the size and configuration of the aircraft, on its orientation with respect to the source of the pulse, and on the frequency spectrum of the pulse. As a general rule, the amount of energy collected increases with the dimensions of the conductor which serves as the collector (or antenna). Typical effective collectors of EMP energy are:

a. Long runs of cable, tubing, piping, and conduit.
b. Antennas and feed cables.
c. Electrical wiring.
d. Metallic structures.

7.4.1.3 Energy coupling. There are three basic modes of coupling of the EMP energy with a conducting system. They are electric induction, magnetic induction, and resistive coupling (sometimes referred to as direct charge deposition). In electric induction, a current is induced in a conductor by the component of the electric field in the direction of the conductor length. Magnetic induction occurs in conductors that form a closed loop; the component of the magnetic field perpendicular to the plane of the loop causes current to flow in the loop. The form of the loop is immaterial and any connected conductors can constitute a loop in this respect. Resistive coupling can occur when a conductor is immersed in a conducting medium, such as ionized air, salt water, or the ground. If a current is induced in the medium by one of the coupling modes already described, the conductor forms an alternative conducting path and shares the current with the medium. Coupling of EM energy to a conductor is particularly efficient when the maximum dimension is about the same size as the wavelength of the radiation. The conductor is then said to be resonant, or to behave as an antenna, for the frequency corresponding to this wavelength. Sinch EMP has a broad spectrum of frequencies, only a portion of this spectrum will couple most efficiently into a specific conductor configuration. Thus, a particular aircraft of interest must be examined with regard to its overall configuration as well as to the component configuration. Skin currents resulting from the EMP interaction with an aircraft are primarily composed of half wavelength, damped sine functions corresponding to the lengths of structural components. The frequency content of the resulting superposition of damped sine functions must be taken into account in coupling analysis of the skin currents and charge densities to internal conductors.

7.4.1.3.1 Reflected energy. If the EMP wave impinges upon the ground, a part of the energy pulse is transmitted through the air-ground surface whereas the remainder is reflected. An above ground collector such as a parked aircraft can then receive energy from both the incident and reflected pulses.

Downloaded from http://www.everyspec.com

Included in this category are aircraft parked on ship decks. The net effect will depend on the degree of overlap between the two pulses. Also, skin currents and charge densities resulting from the interaction of incident and reflected waves may either reinforce or cancel each other depending upon the phase difference between the waves.

7.4.1.4 Focusing effect. As seen earlier, the EMP threat to a particular system, subsystem, or component is largely determined by the nature of the collector (antenna). A sensitive system associated with a poor collector may suffer less damage than a system of lower sensitivity attached to a more efficient collector. An important consideration in designs for EMP hardening is the fact that energy may be focused or concentrated on sensitive components because of their attachment to efficient collectors of EMP energy.

7.4.1.5 System generated EMP. In addition to the EMP arising from the interaction of gamma rays from a nuclear explosion with the atmosphere (or the ground), another type of EMP called the System-Generated EMP (SGEMP), is possible. This term refers to the electric field that can be generated by the interaction of nuclear (or ionizing) radiations, particularly gamma rays and X-rays with various solid materials present in electronic systems. The effects include both forward-and back-scatter emission of electrons and external and internal current generation.

7.4.1.5.1 Systems affected. The SGEMP is most important for electronic components in satellites and ballistic systems, above the deposition region, which would be exposed directly to the nuclear radiations from a high altitude burst. The SGEMP, however, can also be significant for surface and moderate altitude bursts if the system is within the deposition region but is not subject to damage by other weapons effects. This could possibly occur for surface systems exposed to a burst of relatively low yield or for airborne (aircraft) systems exposed to bursts of higher yield.

7.4.1.5.2 Effects on systems. The electric fields generated by direct interactions of ionizing radiations with the materials of an electronic system can induce electric currents in components, cables, or ground wires. Large currents and voltages, capable of causing damage or disruption, can be developed just as with the external EMP. Because of the complexity of the interactions which lead to the SGEMP, the effects are difficult to predict and they are usually determined by exposure to radiation pulses from a device designed to simulate the radiation from a nuclear explosion. Protection from the effects of SGEMP can be achieved using the techniques described.

Downloaded from http://www.everyspec.com

7.4.2 Avionics and electrical subsystems.

7.4.2.1 General design approach. Hardening of aircraft to survive the EMP threat is a total system problem. The amount of EMP energy that is coupled into sensitive electrical or electronic components is dependent on the shielding provided by the structure and electrical installation. The susceptibility of sensitive electrical or electronic equipment is dependent on circuit component selection, circuit design, and the application of protection devices. Since the choice of an EMP hardening approach can significantly affect aircraft weight, program cost, and schedule, the designer must strive at the outset to select the approximate approach from the available options. Three basic design approaches are available for EMP hardening:

a. Use the inherent shielding of the aircraft to advantage and design the electrical and electronic equipment to survive the voltages and currents that will couple into the interconnecting wiring.

b. Increase the EM shielding of the structure and electrical installation to reduce the EMP voltage and currents coupled Into the interconnecting wiring to levels that will not damage the electrical and electronic equipments.

c. Combine the design of equipment to survive coupled volt ages and currents with shielding to reduce the voltage and current levels. For most aircraft designs, this approach is expected to be the most cost effective.

Regardless of the EMP design option to be used, an understanding of EMP phenomenology and effects and good design practices are essential to the selection of a cost-effective hardening approach. Applicable documents are MIL-I-8700 and NAVMATINST 2410.1B.

7.4.2.1.1 Protective devices and techniques. Electrical and electronic equipment can be protected by the application-of devices that limit the EMP-induced currents or voltages. The characteristics of some of these protective devices are discussed in 7.4.2.1.2 through 7.4.2.1.4. Examples of large-scale EMP protective devices are arresters, spark gaps, bandpass filters, amplitude limiters, circuit breakers, and fuses. On a smaller scale, diodes, nonlinear resistors, SCR clamps, and other such items are built into circuit boards or cabinet entry panels can be used.

7.4.2.1.2 Circuit layout. Recommendations for circuit layout include the use of common ground points, twisted cable pairs, and system and intrasystem wiring in tree arrangements (radial spikes); avoidance of loop layouts and coupling to other circuits; and use of conduit or cope trays and shielded/isolated transformers. The avoidance of ground return in cable shields is also recommended.

Downloaded from http://www.everyspec.com

7.4.2.1.3 Grounding practices. Good grounding practices will aid in decreasing the susceptibility of a system to damage by the EMP. A ground is commonly thought of as a part of a circuit that has a relatively low impedance to the local earth surface. A particular ground arrangement that satisfies this definition may, however, not be optimum and may be worse than no ground for EMP protection. In general, a ground can be identified as the chassis of an electronic circuit, the low side of an antenna system, a common bus, or a metal rod driven into the earth. The last depends critically on local soil conditions (conductivity), and it may result in resistively coupled currents in the ground circuit. A good starting point for EMP protection is to provide a single point ground for a circuit cluster, usually at the lowest impedance element.

7.4.2.1.4 Voltage limiting. Wires which go to externally mounted devices, especially those with long cable runs, are apt to see large voltages, with respect to structural grounds. Examples include wingtip navigation lights, certain antennas, and possibly fuel probes. Large voltages can cause damage to terminating equipment, couple Into other adjacent wires, or both, even though the external device itself may be hardened to EMP. Good design practice dictates using protective devices at the most exposed device to prevent destructive transients from propagating inward to terminating equipment or to other wires.

7.4.2.2 General guidelines.

7.4.2.2.1 Aircraft. For an aircraft which is in the early design stages, an overall EM environment hardening approach is strongly recommended. Except for the types of deliberate antennas and the modes of fuel ignition considerations on an aircraft, design considerations are the same as for missiles (although many aircraft will not have logic circuitry or coded equipment). An aircraft with a bomb bay should be compartmentalized forward and aft of the bomb bay area. All cables entering, leaving, or passing through the bomb bay area should be shielded, and all packages in the bomb bay area (primarily bombs) should be compartmentalized. An extremely difficult area to harden with respect to all electrical/EM environments is the cockpit window. A translucent wire mesh (less than 1/8 in (0.32 cm) mesh) is attractive for all EM environments except lightning. Wire impregnated insulators shatter when heavy current is carried by the wires. The mesh is limited in effectiveness and has only a few db attenuation at 10 GHz. An alternate approach to the aircraft total shield concept is to shield all the cables and packages within the aircraft. If this concept is used, the following guidelines should be followed:

a. Use a one-point circuitry ground.
b. Separate all power leads.
c. Balance power leads on long cable runs.
d. Use shielded twisted pair wiring concept on all lines except power lines.

Downloaded from http://www.everyspec.com

e. Build all power leads in separate bulk shielded cables.
f. Build all other leads in bulk shielded cables.
g. Use metallic enclosures for all electrical and electronic packages.
h. Filter all leads entering or leaving high noise level packages. This includes, for example, motors, choppers, inverters, power relays, and high power transistor switching circuits.
i. Filter all leads entering or leaving a transmitter package except the transmitter output coaxial cables.
j. Use a filter and arc suppressor on all deliberate receiving antennas and on low power transmitters using semiconductor output devices. Filtering will be limited by passband requirements, but the combined filter and arc suppressor will, in general, handle the problem.
k. Design all fuel gages with a filter and arc suppressor in the probe line at the tank. The arc suppressor must be constructed to force the arc on the outside of the tank and must use a dielectric seal which ensures no vapors are at the arc point.

These concepts will not only harden the aircraft to EM environments, but will also mechanically ruggedize electrical wiring, thus greatly improving the overall reliability of the aircraft MEWS.

7.4.2.2.2 Missiles.

7.4.2.2.2.1 Wiring techniques. Desirable techniques include:

a. Use no more than one ground point for all electronic circuitry. One ground point is necessary for static bleedoff, but the ground resistance may be as high as 100 ki loohms. This is especially important for low-frequency EM environments such as EMI and lightning. It does very little for frequencies above 10 MHz in-flight EMP.

b. Use the shielded twisted pair concept on all other lines. This technique is ineffective above 1 MHz for missile and aircraft systems but greatly reduces low-frequency coupling. Ground all shields outside of packages.

7.4.2.2.2.2 Shielding. Build the entire electrical and electronics system in a solid metal enclosure. This is a powerful in-flight EMP hardening concept. Clearly, this concept must be violated to some extent in a practical system. As pointed out earlier, good RF connectors and properly designed braid cables (85% coverage) are acceptable design tools even though they are not solid metal. This will also provide a good static bond from end-to-end on the missile.

Downloaded from http://www.everyspec.com

7.4.2.2.2.3 Compartmentalization. Place all sensitive electronic circuitry in one compartment. In addition, place all noise generators, if possible, in a separate compartment. A high-impedance static ground (one-point ground) should be in the electronic circuitry compartment to prevent charge buildup when this sensitive compartment is separate from the remainder of the missile, which may occur when packages are recycled for checkout.

7.4.2.2.2.4 Filtering. Filter all leads entering or leaving the sensitive electronics compartment. If noise generators must be located in this compartment, make a small subcompartment and filter all leads. This will substantially reduce all electrical/EM environment problems except SGEMP within the compartment. Excitation of downstage wires outside the compartment can be reduced by the insertion of a low-Q, high-impedance, ferrite choke. The high-frequency (1-10 GHz) region of radiation requires an extremely tight compartment for high peak field environments. If holes in the Faraday (solid) enclosure were less than 1/8 in (0.32 cm) and all cracks were well sealed, this would not be a problem. In a compartment containing logic or other sensitive circuitry, special effort must be given to reduce holes and cracks or use special techniques such as gratings or conducting translucent materials where optical transparency is required. SGEMP, generated within the compartment containing sensitive electronics, could be filtered by something as simple as pinfilters, but the numbers required are usually prohibitive. Reliability of such devices may be a problem since they would be in series with all leads. Internal EMP (IEMP) is not well understood at this point in time; hence, optimal approaches to its hardening are difficult to conceive. However, minimizing effective loop areas is helpful.

7.4.2.2.3 Electromagnetic effects overlap. A good design should provide hardening to the greatest extent possible for all EM phenomena at the least cost, however measured, in order to be efficient. Designs, in addition to providing the maximum composite protection from all EM effects, should be carried out such that they take as much advantage of EM phenomena overlap as possible. This necessitates consideration of all EM phenomena effects in a simultaneous manner during the design or retrofit phase. The following list identifies the EM phenomena of interest and the approximate frequency band associated with each:

a.	EMP	(O MHz-100 MHz).
b.	EMI	(40 Hz-10 MHz).
c.	Electromagnetic radiation/ Electromagnetic compatibility (EMR/EMC)	(1 MHz-10 GHz).
d.	SGEMP*	(1 MHz-500 MHz).
e.	Lightning (direct stroke)**	(1 Hz-5 MHz).
f.	Static electricity arcs	(1 MHz-100 MHz).
g.	Code leakage	(100 kHz-10 MHz).

*The 1 MHz is based on excitation of complete system cables.
**The 1 Hz is important only to dissimilar material damage. For most effective coupling, the frequency should be about 1 kHz.

Downloaded from http://www.everyspec.com

7.4.2.3 System design practices. Desirable system design practices include:

a. Minimize holes, gaps, and other apertures in airframe skin.

b. For skin panels, especially on or near shielded bays, use 0.010 in (0.025 cm) minimum thickness aluminum. Use 20 times this thickness for honeycomb.

c. Avoid use of RF gaskets if continuous metal-to-metal contact across joint can be maintained.

d. When necessary to pass a cable or line near the vicinity of a small hole or parallel to a slot on aircraft skin, locate cable as close to aircraft skin and as far from hole as possible.

e. Avoid laying cables or lines across (transverse to) a slot in aircraft skin.

f. Insure that aircraft external antennas are designed to prevent EMP-coupled currents from entering vehicle and being propagated to electronic interface connectors.

g. Insure that, when hydraulic lines pass through fuselage skin, through connectors be provided to shunt off EMP-coupled currents; thus, keeping those currents on exterior of vehicle.

h. Design shielded bays to house sensitive electronics equipment, when necessary.

i. A new design should be directed toward hardening to all electrical/EM environment problems and should be based upon the predominant type or types to be faced:

(1) EMP is generated by interaction of nuclear weapon radiation such as gammas or X- rays with air or earth; it affects missiles or aircraft on the ground, in the ground, or in the air.

(2) EMI is considered to be transient noise generated by electrical or electronic circuitry within the missile or aircraft system.

(3) EMR/EMC is the field generated by radar and communications systems whether on board the missile or aircraft, or located remotely.

Downloaded from http://www.everyspec.com

(4) IEMP or SGEMP is generated primarily by gamma and X-ray interaction with materials of a system resulting in EM transients which are coupled to wiring and electronic circuitry.

(5) Lightning as considered In this handbook strikes the missile or aircraft directly while on or in the ground, or in the air.

(6) Static electricity may be assumed to build Up on internal circuitry (if improperly designed) or to develop on sections of a missile or aircraft in flight such that repetitive discharges occur resulting in EM signals. Such discharges do not occur between sections which are bonded together.

(7) Code leakage. During certain cycles of coding, synchronized EM leakage may occur which could reveal information pertinent to deciphering the code.

7.4.2.4 Installation practices. Desirable installation practices include:

a. All shielded bay joints must have continuous conductive metal-to-metal bonding. This includes joints to adjoining airframe structure as well as to internal equipment mounting racks and rack-to-equipment joints.

b. Insure that conductive joints are corrosion-resistant so that electrical conductivity is maintained throughout airframe life.

c. Insure that all bond straps, where metal-to–metal joints are impossible, have length-to-perimeter (cross-sectional) ratios of less than 3.

d. Ground overall cable shields and conduits to airframe structure at least every 3 ft (0.91 m), and every 18 in (45.72 cm), where possible. Use metal-to-metal bonds instead of bond straps.

e. When carrying wire shields through bulkhead connectors, do not back shield more than 1 in (2.54 cm) from connector pin.

f. When terminating wire shields at an avionics package interface connector, insure that shield pigtail is not longer than 2 in (5.08 cm).

Downloaded from http://www.everyspec.com

g. Use single-point ground with "crowsfoot" or “tree” subsystem grounds.

h. Insure that different EMI/EMC wire categories, particularly power lines, are enclosed in separate shielded cables and conduits.

i. Use metal-to-metal conductive bonding at all conduit terminations at shielded bays. All bulkhead connectors must be metal-to-metal bonded to shielded bay walls.

j. Do not run fuel lines, hydraulic lines, control cables, or other possible current carriers through shielded bays.

k. Ground fuel lines, hydraulic lines, control cables, or other possible current carriers to structure at least every 3 ft (0.91 m).

l. Do not run shielded or unshielded cabling in proximity of refueling port. Make sure refueling port is directly metal-to–metal bonded to surrounding structure.

m. Locate sensitive equipment, circuits, and cables away from bay and avionics package corners.

n. Mount filters and voltage limiters at shielded walls to prevent energy from bypassing protective device.

o. Use RF gaskets between controls and displays mounting surface and instrument panel or console.

p. Where possible, lay out system elements or circuit components along cable trunk in order of noise level and component susceptibility.

q. Avoid loop layouts which can pick up magnetic (or H) fields.

7.4.2.5 Subsystem circuit design practices. Desirable subsystem circuit design practices include:

a. Comply with EMP current pulse requirements of EMP hardening specification at interface circuits for avionics, electronic, and electrical systems, if equipment is mission-essential.

b. Isolate internal circuits from interface circuits using spatial or electrical techniques.

c. Design all circuits to forgive momentary logic upsets and function normally after an EMP disturbance.

Downloaded from http://www.everyspec.com

d. Mechanize systems so that false data is not read into memories during an EMP disturbance when such false data will impair performance. Use circumvention scheme only if required.

e. Insure that crew-operated control-panel positions are not stored in soft logic which may be lost during an EMP disturbance.

f. Protect sensitive interface circuits with filters and limiters. Insure that protective devices can withstand short-duration, high-amplitude EMP current pulses.

g. Avoid use of MOS devices in interface circuitry.

h. Avoid use of circuits which may latch up in an unstable mode due to abnormally high voltage or current transients.

i. Design interface circuits to have as low an input impedance as possible.

j. Use only MOS devices which have internal input Zener protection.

k. Do not use MOS devices which contain thin film resistors.

l. Do not use wet tantalum capacitors.

m. Avoid switching circuits which operate on a rate of input change.

n. Circuit switching times should be as slow as possible. To insure this, design for maximum rise time and maximum storage time.

o. Insure that logic levels for digital systems are as large as possible and preferably neither logic state should be zero volts. Avoid very low voltage logic circuitry.

7.4.2.6 Subsystem monitoring practices. Desirable subsystem monitoring practices include:

a. If equipment is mission-essential, insure that EMP design and test requirements for EMP hardening of avionics, electronic, and electrical systems have been incorporated into appropriate sections of procurement specification. Make sure data requirements have been included in procurement package.

Downloaded from http://www.everyspec.com

b. If equipment is located outside of shielded bays, insure interface compatibility documentation (ICD) shows a requirement for equipment mounting surfaces to have a conductive finish. Make sure an EMI-approved interface connector is specified in the ICD.

c. Insure no electrical leads are grounded to chassis within enclosure. Make sure that chassis, power, and signal grounds are brought out on separate connector pins.

d. Make sure all interface connectors are EMP-approved as specified in the ICD and are metal-to-metal bonded to enclosure.

e. Check drawings to insure that conductive finish mounting surfaces are provided as specified in the ICD.

f. During design reviews, check all design requirements of EMP hardening specification for avionics, electronic, and electrical systems against suppliers' drawings, specifics tions, and analyses.

g. Check to see if design avoids use of MOS devices in interface circuits. Check for use of spatial/electrical isolation to internal circuitry.

h. Insure that EMP protective devices such as Zeners have test data backup to insure survival to EMP.

i. Make sure EMP analysis adequately accounts for transient performance and recovery.

j. Review test plan to insure adequate monitoring to detect both long-term and unallowable transient malfunction.

k. Have prime contractor EMP personnel on site at all major subsystem EMP current pulse tests.

l. Check to see that spares are not connected to ground or any load.

7.4.2.7 Equipment classification. Mission-essential equipment is that equipment required to operate following a nuclear threat encounter. Identification of such electrical and electronic equipments is necessary to determine the inherent hardness of the basic system which, in turn, can influence the EMP design approach. Mission-essential electrical and electronic equipment can be classified as:

Downloaded from http://www.everyspec.com

a. Simple electrical equipment such as relays, solenoids, motors, transformers, and synchros. This equipment characteristically has high impedance to ground, and the primary failure mechanism associated with EMP is voltage breakdown. Device hardness can be attained at little cost by specifying a high dielectric-withstanding voltage requirement for the devices.

b. Electronic equipment that includes sensitive solid-state components. This type of equipment generally does not present a high impedance to the EMP-induced common mode cable currents. Component burnout and, in the case of permanent memory computers, logic scramble are primary failure modes.

c. If the majority of the mission-essential equipment identified for a specific aircraft are simple electrical devices, the EMP hardening approach would be to selectively harden or protect the few remaining solid-state devices. On the other hand, if the mlsslon-essential equipment list includes numerous susceptible solid-state devices, shielding should be a prime consideration.

d. Protective devices provide a good design solution for hardening sensitive solid-state circuits and simple elec trical devices with low dielectric-withstanding voltage requirements. Protective devices are a class of circuit elements designed to reduce the effect of transients on the normal operation of circuits. Included under the category of protective devices are various filters and chokes, Zener and other diodes, spark gaps, gas tubes, nonlinear resistors, as well as many hybrid designs. filters and chokes are usually used on low-power analog circuits. Spark gaps, gas tubes, and transformers are used when directly exposed circuitry is involved and when lightning protection is also required.

7.4.2.8 Equipment susceptibility. Provided the EMP energy collectors are similar in all cases, electrical and electronic equipments can be generally classified as follows:

a. Most Susceptible.

(1) Low-power, high-speed digital computer, either solid-state or vacuum tube (operational upset).

(2) Systems employing transistors or semiconductor rectifiers (either silicon or selenium):

(a) Computers and power supplies.
(b) Semiconductor/solid-state components terminating long cable runs, especially between sites.

Downloaded from http://www.everyspec.com

(c) Alarm systems.
(d) Intercom system.
(e) Life-support system controls.
(f) Telephone equipment which is partially transistorized.
(g) Transistorized/solid-state receivers and transmitters.
(h) Transistorized 60 to 400 cps converters.
(i) Transistorized/solid-state process control systems.
(j) Power system controls and communication links.

b. Less Susceptible.

(1) Vacuum tube equipment that does not include semi conductor rectifiers:

(a) Transmitters.
(b) Receivers.
(c) Alarm systems.
(d) Intercom systems.
(e) Teletype-telephone.
(f) Power supplies.

(2) Equipment employing low current switches, relays, and meters:

(a) Alarms.
(b) Life support systems.
(c) Power system control panels.
(d) Panel Indicators and status boards.
(e) Process controls.

(3) Hazardous equipment containing:

(a) Detonators.
(b) Squibs.
(c) Pyrotechnical devices.
(d) Explosive mixtures.
(e) Rocket fuels.

(4) Other:

(a) Long power cable runs employing dielectric insulation.
(b) Equipment associated with high-energy storage capacitors.
(c) Inductors.

c. Least Susceptible.

(1) High -voltage 60 cps equipment:

(a) Transformers, motors.
(b) Lamps (filament).
(c) Heaters.
(d) Rotary converters.
(e) Heavy duty relays, circuit breakers.
(f) Air-insulated power cable runs.

Downloaded from http://www.everyspec.com

7.4.2.9 Component susceptibility and sensitivity. Some typical energy-to-failure levels in μJ (energy required to damage semiconductors having a 1 μs square pulse) for common component types include:

a.	Point-contact diodes	0.7-12.
b,	ICs	10.
c.	Low-power transistors	20-1000.
d.	High-power transistors	1000.
e.	Switching diodes	70-100.
f.	Zener diodes	1000.
g.	Rectifiers	500.
h.	Relays (welded contacts)	2-100 x 10^3.
i.	Resistors	10000.

Some electronic components are very sensitive to functional damage (burnout) by the EMP. The actual sensitivity will often depend on the characteristics of the circuit containing the component and also on the nature of the semiconductor materials and fabrication details of a solid-state device. In general, components will have relative sensitivity to EMP as shown below (sensitivity decreases from top to bottom):

a. Microwave semiconductor diodes.
b. FETs.
c. RF transistors.
d. SCRs
e. Audio transistors.
f. Power rectifier semiconductor diodes.
g. Vacuum tubes.

7.4.2.9.1 Component failure modes. Typical failure modes of semiconductor components are:

a. Thermal second-breakdown.
b. Burnout.
c. Dielectric breakdown.
d. Malfunction.
e. Upset.
f. Change of state, bit error, or dropout.
g. Out of specification limits.
h. Parameter variation greater than 10%.
i. Bulk damage.
j. Surface damage.

7.4.2.9.2 Component selection. Experience has shown that an upper bound of the current on the individual wires within a cable is approximately the total cable current. Given this condition, any Interface circuit (a circuit connected to an interface wire) should be able to withstand that current. This suggests that the semiconductor should have either a large junction area, a current-limiting resistor, or a current-shunt resistor to desensitize the semiconductor.

Downloaded from http://www.everyspec.com

7.4.2.9.3 Parts control for semiconductors. In procurement specifications for parts, it is recommended that all parameters be specified at both ends of the parameter range. That is, specify minimums and maximums for every parameter. All components, regardless of supplier, are periodically subject to defects or anomalies which can significantly impact damage thresholds. For this reason, it is strongly recommended that the feasibility of implementing screen tests to weed out weak parts be studied. An effective pulse-power screen test should meet the following criteria:

a. Be nondegrading.
b. Be reliable at destroying or rejecting weak parts.
c. Be performed in a circuit configuration that is relatable to system application. For example, source impedances of 20 to 200 are expected. Load impedance and base hookup might be designed to reasonably approximate the Intended use of the part.
d. Be cost-effective (low cost per part).

For ICs, devices should be selected which have heavier-than-normal metallization to prevent burnout of these elements. IC hardness should be limited only by semiconductor burnout and not by other, less critical elements such as leads. Dielectric-isolated ICs are preferred over the junction isolated types. Where it is necessary to violate this rule, the back-bias power supply leads should be current-limited to prevent junction burnout by the bias supply, in the event of momentary bias reversal by EMP. Mechanical-pull tests on lead wires can serve to eliminate poor electrical bonds in parts. For MOS devices, it is recommended that parts not be used which contain thin-film resistors. All gates should be internally, Zener diode protected. Electroexplosive initiators should be required to withstand a large voltage (5 kV) from pin to case. Precision resistors should be specified with care. The use of thick-film resistors as precision resistors should be carefully considered, with respect to the EMP environment. Some thick-film resistor characteristics are listed below:

a. Most of the newer materials exhibit a sensitivity to high voltage.
b. High-voltage sensitivity is more pronounced in high-resistivity materials that typically reduce in resistivity upon exposure to high–voltage pulses.
c. Some of the newer materials exhibit a significant shift in their temperature coefficients of resistance during pulse adjustment.

7.4.2.10 Network hardening. Network hardening includes grounding practices and methods for reducing cross-talk between leads as well as the physical location of parts of the network. A basic concept is to reduce impressed voltages by use of a one-point ground system. The violation of this practice allows large currents to flow in the ground system due to potential buildup

Downloaded from http://www.everyspec.com

between the grounds. One-point grounding is excellent for general EM environments, although it does not contribute as much as might be hoped to EMP hardening, since ground return paths should be shorter than about one-eighth of a wavelength for any radiation field so that antenna-type pickup is minimized. This is a difficult rule to enforce without using shielding to reduce high-frequency fields. Other effects and associated hardening techniques include:

a. Induced current pickup due to magnetic fields can be reduced by using twisted pairs. If shields are also used, the shield reduces the field significantly for thicknesses greater than about a skin depth and the twist assures that loops exposed to the field that does penetrate are minimized. The use of balanced signal lines tends to make induced signals appear in the common mode.

b. Cross coupling of electrical energy can be reduced by separating power and signal leads. This is especially useful in protection against EMI effects but also has application in EMP protection.

c. In order to minimize the loops in a system, Christmas tree wiring (wires to packages from a central trunk) or crow's-foot wiring (wires to packages from a central node) are recommended over point-to-point wiring. These practices are most effective at low frequencies. In Christmas tree wiring, the most sensitive circuits should be located toward the point of the tree so that the highest signal currents generally flow the shortest distance along the trunk.

d. Network mechanization need not be electronic. If such a design causes excessive vulnerability problems, it is possible to use electromechanical, magnetic, or fluidic technology, for example.

e. Cancellation is another network design technique that has been used. Sometimes damage to a transistor can be compensated for by damage to a matched device. For example, push-pull circuits can suffer significant matched current gain degradation in both transistors without significantly affecting circuit behavior. Slow responding (analog) circuits tend to respond poorly to EMP transients, offering another protection technique.

7.4.2.10.1 <u>Circuit design.</u> Even with relatively sensitive semiconductors in the circuit, the circuit can still be designed to be very resistant to permanent damage by proper circuit design. Examples are as follows:

Downloaded from http://www.everyspec.com

a. Common mode rejection techniques on interface circuits.
b. Slowing the circuit response to inhibit large peaks from building up rapidly on semiconductors (a much lower amplitude for a much longer time is an improvement, since the device can get rid of part of the heat during very long pulses).
c. Filters on interface circuits.

For microcircuits, hardening recommendations include the following:

a. Use high-impedance circuitry.
b. Avoid thin-film resistors.
c. Glassivate the microcircuit.
d. Maximize aluminum thickness and maximize the aluminum-to-oxide thickness ratio.
e. Use low-temperature, short-time aluminum-silicon alloying process.

7.4.2.10.1.1 Bias levels and bias resistors. Junctions which are intended to be Intentionally back-biased permanently should be biased to a relatively high voltage, but the bias supply should be current-limited so that damage to the junction will not result if EMP momentarily reverses the bias potential.

7.4.2.10.1.2 Microwave detectors. Microwave mixer diodes should be protected from overstress by transmit/receive (TR) tubes of appropriate design and properly located in the waveguide, where possible.

7.4.2.10. 1.3 Receiver and intermediate frequency (IF) amplifier input circuits. Receiver input circuits present special problems to the circuit designer, because, as the typical signal level developed across the antenna impedance is of the order of 5 μV, the receiver is a high-gain, high-input impedance device. Since the antenna is designed to pick up radiated EM energy efficiently, especially across the operating band of the antenna, the portion of the EMP spectrum which coincides with the antenna operating band may inject many amperes into loading resistors at the receiver front end. Since at least part of the spectrum of the EMP-induced transient will occur over the range of frequencies the receiver was designed to amplify, it is impossible, based on frequency discrimination, to prevent upset of the receiver. In addition, the antenna out-of-band response is often unknown except by special EMP analysis or tests. Design techniques to reduce EMP susceptibility include:

a. The receiver should be designed to recover effectively from the EMP-induced upset and avoid burnout by the EMP transients.

Downloaded from http://www.everyspec.com

b. The vast majority of receivers decode analog (frequency or amplitude-modulated) signals. The disruption of voice communication or visual radar displays during the EMP transient (less than 1 ms) may or may not impair its effective information transmittal. Servomechanisms seldom respond to such small perturbations. As effective integrating devices or feedback mechanisms, they will be self-correcting. A more serious upset would occur to a radar unit used in navigation such as Doppler radar. However, since most navigation functions are now determined with reference to an internal navigator, with the external units serving as correcting (integrating) elements, the short-duration upset may be calculated out, especially if special sensors are added to the avionics which tell the avionics or navigation computer that an anomalous event has occurred.

c. Potential burnout or overstress of the receiver input must be handled much more definitely. The major problem is to limit the total energy injected into the receiver. The best method of protecting the receiver is by voltage and current limiting. Because of the expected frequency content of the desired signal, the limiting technique must be frequency independent at least over the pass band of the antenna/receiver system. One such device is the TR box used for automatic switching when a transmitter and receiver share a common antenna. Such devices should be placed as close to the antenna as possible. There is no point in protecting the receiver only and allowing injected currents to be coupled to intervening wiring in other system devices which are equally susceptible to burnout and, perhaps, more functionally susceptible to upset.

In summary, receiver input circuits must be protected against burnout, using the many techniques and devices available to the circuit designer. Due to the analog character of most receiver functions, upset can be tolerated at the receiver input and compensated for elsewhere in the functional system or subsystem.

7.4.2.10.1.4 Sensitive special detectors. Specific detector types which potentially have unique vulnerabilities include the stellar inertial platform, the laser range finder, low-light-level television, and IR detectors. The individual sensitivity of the detectors is the result of the detector itself. In each case, the detector is enclosed in a vessel (or dewar vessel), and it is this detector unit - vessel plus detector - that may be especially vulnerable. Each of these detectors is sensitive in the visible light spectrum. Other sensitivities include:

Downloaded from http://www.everyspec.com

a. The light detectors are generally electron sensors used in conjunction with photoconductive phosphors. The typical detection system converts a photon impulse into a directly proportional electron current which is amplified and used as a leg of a servo loop. The detector system is usually enclosed in an evacuated nonmetallic and partially non-metallic vessel, and thus allows an EMP point of entry (POE). The effect of EMP on these detector systems is simply the generation of erroneous electrical data. The free-field or the pulsed currents and fields caused by EMP will interfere with the phosphor and detector within the evacuated vessel, causing a change in the charge carrier density and distribution and resulting in the erroneous output data. Shielding is possible by surrounding the vessel with a metallic conductor with a tube at the entry window extending out from the shield which is long enough to attenuate the highest predicted frequency. Actual shield design will, as hardware specifications become available, be based on a thorough free-field analysis of individual detector systems.

b. A typical IR sensor circuit involves a detector photo-conductor which is in an evacuated cryogenic environment. The dewar, or the vessel containing the dewar, must contain a nonmetallic window to allow the IR energy to reach the detector. This window is a POE for the EM wave.

c. The most sensitive element in the IR sensor is the FET which the detector drives. The FET gate is particularly vulnerable to high-voltage pulses induced by EMP because its susceptibility to burnout is voltage dependent. Partial protection is achieved by locating the FET close to the detector and thus minimizing lead length. As mentioned earlier, total detector system shielding may be possible based on a free-field analysis. The final vulnerability of the detector system to EMP burnout has to be determined with simulated EMP assessment tests.

7.4.2.10.1.5 Grounding. Grounding practices have been established for lightning, personnel safety, static charge, and other purposes. Grounding for EMP imposes relatively few additional requirements, most of which concern shielding. Often, there is confusion over the division between grounding and bonding; however, in general, grounding dictates where to make the joint, and bonding tells how. On aircraft, shielding, including the frame itself, forms the first line of defense against EMP. The intent is to make portions of the airframe a continuous EM shield. The same basic grounding pattern is carried to the subsequent levels of shielding. The grounding scheme of aircraft is concerned with the connection of adjoining metal parts with low-impedance bonds at intervals less than 0.15 wavelength to prevent development of high

Downloaded from http://www.everyspec.com

potentials between the parts and subsequent arc prevention. Grounding for arc prevention may be accomplished using the following guidelines:

a. All EMP shielded bays must be bonded to the airframe structure.
b. All electrical , electronic, and avionics box enclosures must be bonded to their mounting structures.
c. The mounting structure itself must be bonded to the shielded bay that it is in or to the airframe.
d. Conduits and cable overall shields should be bonded to the airframe structure at frequent intervals.
e. Never allow power or signal grounds to be bonded to the chassis within the avionics package.
f. Use a single-point grounding scheme for signal grounds, power grounds, and audio shields.

7.4.2.10.2 Hardening techniques. The transient signals induced by EMP excitation appear as high-amplitude, high-frequency damped sinusoidal currents on the signal, power, and ground lines into an electronics package. Circuits hardened to EMP should:

a. Avoid picking up the radiation or capacitively or inductively coupling transients from one line to another.
b. Cope with the transients received on the lines.
c. Avoid transmitting any transient to other circuitry.

Merely hardening circuits to EMP by adding fixes onto basic or existing designs will rarely simultaneously meet functional requirements, EMP hardening requirements, radiation hardening requirements, various EMI/EMC requirements, and be economical and reliable. Each circuit design should be evaluated at the breadboard stage and during the initial production stage to insure functional and hardness compatibility. During the initial design stage, computer simulation of circuit responses to normal and abnormal signal levels can save much time and money which would later be spent to improve designed equipment in use only marginally.

7.4.2.10.2.1 Common mode rejection. The currents induced by EMP excitation on various wires of a cable tend to be roughly equal in magnitude and phase, especially when the wires are terminated with the same impedance. One method to harden circuitry against EMP upset is to keep (or make) the induced transient a common-mode signal between a signal line and its return, and then to reject the common-mode signal with a differential amplifier or transformer with the following characteristics:

a. A carefully designed differential amplifier will have a high common-mode rejection ratio and equal input and output impedances referred to as signal common or ground. The equal input and output impedances will act to keep

Downloaded from http://www.everyspec.com

common mode signals between amplifiers truly common mode, which will enhance the amplifier's ability to reject EMP transients. Interconnections between differential units should be twisted pair or shielded twisted pair.

b. Currently available differential amplifiers typically have gains in excess of 10,000 V/V and are connected using large amounts of negative feedback. With such amplifiers, the large amount of negative feedback means that the circuit will reject any disturbances injected internal to the circuitry by capacitive or inductive coupling from adjacent circuits.

c. Differential amplifiers generally have high-to very high-impedance inputs, are very sensitive to Input voltage transients, and are prone to oscillate at high frequencies. These limitations can be overcome in external components designed to make the differential amplifier resistant to burnout when subjected to an EMP transient.

d. Differential transformers weighing approximately 0.1 oz (2.83×10^{-3} kg) have been developed and used with some success. The essential property of the differential transformer is that impedance from line to common is equal on either the primary or secondary side. Another use of the differential transformer is to convert unbalanced signals into balanced signals.

e. Transformers of any kind suffer from two limitations. Transformers will not pass DC signals or high-frequency signals, and they can cause a power loss to the system. Often, the high-frequency limitations of a transformer can be turned to the advantage of the hardening design because the higher frequency components of the EMP transient will not be passed by the transformer. However, the transformer looks like a high-impedance inductive load to the high-frequency signals and must also be protected against burnout or coil-to-coil arcing.

It is also possible to use two-phase logic in a differential scheme. Here, the differential amplifier is replaced by a differential voltage level detector with some detection hysteresis. This circuit will hold false, for example, until the inputs reverse state by some differential. Then the output will switch true. Likewise, when the inputs reverse again, some differential again must be exceeded before the output will switch false. The level detector should be slow enough so as not to respond to jitter on the two-phase signals or a slight difference in propagation delay. The same idea can be mechanized using a clocked flip-flop with clock time greater than several μs. Here, the upset can only occur during the clock tone time or clock

Downloaded from http://www.everyspec.com

transition time. This scheme does not prohibit upset; it reduces the probability of upset to a small number.

7.4.2.10.2.2 Signal integration or delay networks. Because EMP transients last generally no longer than several μs, a method of hardening circuits to EMP is to integrate signals over times greater than a few μs, or to provide a logical delay network which requires the presence of the activating signal for several μs before responding to it. Examples of signal integration and delay networks are:

a. The common integration network is an RC low-pass filter. This network will attenuate signals whose frequency is greater than 1/RC and will insert a phase delay for sinusoidal signals equal to arc tan (ω_o RC), where ω_o is the circular frequency of the sinusoidal signal. This type of circuit may be used for analog or digital signals.

b. Another type of delay network useful for digital signals is the clocked delay. In this scheme, the signal is used to enable a preset counter which is decremented by a lock or some other timing signal. If the signal is still when the countdown is complete, it will be accepted by subsequent logic. Frequently, the logical opposite of the input signal is used to reset the countdown chain.

Circuitry used for electrical or electromechanical status or mode indication is frequently much faster than necessary. All circuitry which drives display devices such as indicator lamps need not be any faster than a 50 to 100 cps data rate. Circuitry which checks such avionic functions as overvoltage or undervoltage, guidance platform slew rate, wing flap or stabilizer position, or landing gear position rarely needs to respond faster than 1 μs to a control signal. Circuitry which reacts to results of pilot or navigator commands or directives frequently can respond as slowly as 1 μs without detriment to the system. In all these places, signals should be integrated up to the limits cited, especially since many of the sensors, devices, and switches mentioned are exposed to the incoming EMP itself.

7.4.2,10.2.3 Low-impedance voltage devices. As mentioned previously, the EMP-induced transients appear on cabling and wiring as large-amplitude currents. When these currents are injected into the high impedance typical of amplifier inputs and logic circuitry in its OFF state, very high voltage transients occur. The majority of circuit upset or burnout modes are directly concerned with these voltage transients. Therefore, in designing circuits to be resistant to EMP, a good practice is to use low-impedance circuitry or design voltage-operated devices, which generally have high-input impedances, with input current shunts. A basic technique of making an input current shunt

Downloaded from http://www.everyspec.com

is to provide a low value resistor between the signal input terminal of a circuit and ground or signal common. Other protection techniques include:

a. Putting back-to-back diodes or Zener diodes between the inputs to protect operational amplifiers.

b. Providing 3-volt Zener and a current-limiting resistor in the gate lead to protect FET input circuits.

The essence of these schemes is that a low-impedance path is provided around the input to the active element.

7.4.2.10.2.4 Specification controls. Problems may arise in the maintainability or duplication of EMP hardened designs because vendors improve transistor or ICs design without notifying users. These improvements include higher alpha cutoff frequency or smaller junction capacitance for bipolar transistors, higher input impedance (lower gate leakage) for FET devices, or faster switching time and smaller storage time for IC logic. As noted previously, these improvements make the device softer to EMP. For preservation of circuitry hardness, it is necessary to specify both upper and lower bounds of device parameters which affect upset levels. Although functional test specifications usually do specify upper and lower bounds on operational parameters, the most common exceptions are input impedance for high-input impedance devices and minimum storage time for transistors. Here, upper and lower limits should be specified (as well as specifying a low nominal input impedance).

7.4.2.10.2.5 Logic levels. Digital systems must be designed and their logic levels chosen with a sufficient noise margin or threshold to reject EMP transients. All too frequently, logic circuits are operated so that one logic level has a noise margin approximately equal to the total swing, while the other logic level is one or two diode drops from the threshold or ambiguous band.

7.4.2.10.2.6 Circuit organization. Within a shielded enclosure or electronics package, the coupling of EMP-induced transients from circuit to circuit, especially from input interface directly to output interface, is to be avoided. The design procedures and hardening methods within an avionics package include methods of shielding, grounding; and wiring for the electronic system as a whole. In addition, the physical placement of circuit components and functional units can play a large part in determining the intercircuit coupling or the passage of EMP transients through the avionics package. Within the electronic package, large area loops may act as loop antenna for the radiation and pickup of EMP transients between different circuits. Loop-to-loop coupling may be especially serious when printed circuits are used. The loops may be on different printed circuit cards or nested on one card. To reduce these effects, the following organization of circuits should be considered:

Downloaded from http://www.everyspec.com

a. In the design of printed circuits, care must be taken to isolate different circuits such as amplifier stages or gates and should be laid out to minimize the areas of the loops formed. A solid ground plane on one side of the board, or between board layers, will isolate interboard coupling.

b. The wiring between boards should be by twisted or shielded twisted pairs of electrostatically shielded flat (printed) cables to minimize loop area and wire-to-wire coupling. In line with this, point-to-point wiring, especially for low-impedance circuits, should be avoided.

c. A single point or reference node grounding scheme should be employed. The box common (reference node) must actually be as close to one point as possible. The enclosure or chassis itself cannot be used as a reference point. Especially at the higher frequencies of the EMP spectrum, the differential and loop currents on the chassis or enclosure lead to a distribution of voltage drops between various places on the chassis or enclosure. Only the single point should be considered to be true ground. The leads connecting the circuit points to the reference node may have several ohms inductive impedance at EMP frequencies.

d. The interface circuits, which may have relatively large EMP transient currents, must be separated from each other and from the internal circuitry as much as possible. This practice is in addition to the electromagnetic interference compatibility (EMIC) requirement that high and low signal level circuitry be segregated. During an EMP event, normally low-level input/output (1/0) wires may become momentarily high-level signal paths.

e. An important source of transient pickup is test point wiring which is brought to an open connector on the outside of the electronics package. Frequently, the test point internal cabling provides innumerable points of coupling, because the test point wires are mixed together. The fixes are to provide shield covers for all test connectors and separate the test point by function and sensitivity and route them separately to different external connectors.

7.4.2.10.2.7 Circumvention. Circumvention involves sensing an EMP field that could upset or damage some sensitive component and discontinuing signal processing while there is danger of transient malfunction. Three basic circumvention approaches that can be used include:

Downloaded from http://www.everyspec.com

a. If EMP and signals high enough to cause logic changes are both detected, the system can be circumvented by blocking all inputs and recycling the sequence of operations to the last safe reference point. After a designed time delay, operation resumes by resetting where needed and updating to account for the elapsed time. The time delay must be short for missiles, but can be several seconds for aircraft.

b. A second type of circumvention involves an extremely hard but slow digital processor (that does not respond to fast transients) working in conjunction with a soft, fast processor. Ordinarily, the system is under control of the fast processor. However, if EMP is detected, the operation is temporarily turned over to the hard processor, which subsequently resets the fast processor.

c. The third type of circumvention involves manned operation and is thus ordinarily restricted to aircraft. This involves turning on a warning light when EMP is detected so that an operator can reset the system, reload memory from magnetic tape, or perform other required functions.

7.4.2.11 Electrical bonding. Electrical bonding is the mechanical connection of two metal parts so that there is a low-impedance path between the parts. From an EMP standpoint, good bonding prevents the development of RF potentials between adjacent metal parts due to an EMP event. Bonding should not be confused with grounding, the overall pattern of bonding in the system. A good grounding scheme is dependent upon good bonding. Two general classifications of bonding techniques are:

a. Direct bonding - Contact of the two metal parts to be bonded with no intermediate conductors.
b. Indirect bonding - Use of a jumper, gasket, or other conductor to bond the metal parts.

The direct bonding method is preferred where possible, but it is limited to the configuration where the two parts are physically in contact. Indirect bonding is, at best, only a substitute method where the physical constraints make it impossible or impractical to use direct bonding. Any use of indirect bonding must be examined carefully to determine its effectiveness for EMP protection.

7.4.2.11.1 Bonding impedance. Of primary concern in bonding is the impedance between the units or objects that are bonded. The impedance is a function of the resistance, inductive reactance, and capacitive reactance. The resistance will be primarily that across the bonding interface, although the resistance of the bond straps and of the bonded parts will add to this. For frequencies of interest in EMP, the resistance of a good bond interface is usually insignificant compared to the inductive reactance. The latter is

Downloaded from http://www.everyspec.com

determined by the perimeter of the bond joint and by the length and perimeter of the bond strap, if present. The inductive reactance is the most important consideration in bonding for EMP. It may be minimized by maximizing the bond perimeter and minimizing the distance across the bond. The capacitive reactance decreases with increasing frequency; however, it may form a high-impedance resonant circuit with the bonded Inductance at certain frequencies. The capacitance is a function of the physical size and shape of the two bonded parts and their relative positions. In general, long bond straps (over 3 in (7.62 cm) long or length-to-perimeter ratio less than 3) should be carefully avoided. DC resistance measurements are never sufficient to determine the adequacy of an EMP bond.

7.4.2.11.2 Bond straps and gaskets. The use of bonding straps, gaskets, or any other material between the parts to be bonded is strongly discouraged. However, in many cases, such aids to bonding may be required due to physical location, shock-mounted hardware, movable or frequently replaced parts, dissimilar metals, or metals that are susceptible to corrosion. In these cases, a bonding aid may be used only to determine its effectiveness for EMP protection.

7.4.2.11.3 Corrosion. Electrical bonding often results in dissimilar metals making contact with each other. In the presence of moisture, the direct contact of dissimilar metals will cause corrosion to occur at the interface. This corrosion may be of two types - galvanic or anodic reaction. Either type will impair the effectiveness of the electrical bond. The most common is the galvanic reaction, the exchange of ions in a solution, and it results when the two metals have different electromotive potentials. The anodic reaction is the result of a current flow through the moist contact area and is better known as electroplating. In general, prevention of galvanic corrosion will also prevent anodic corrosion. Following is a list of selected metals as they occur in the electromechanical series. A more complete listing may be found in MIL-STD-889. Further information can be found in AFSC Design Handbook OH 1-4. Metals at the top of this list are more positive in electromotive potential. In general, any metal or alloy will tend to corrode when coupled to a metal below it when the two metals are exposed to a moist environment. However, contact between adjacent metals in this list is considered compatible.

a. Magnesium.
b. Magnesium alloys.
c. Zinc.
d. Aluminum 25.
e. Cadmium.
f. Steel or iron.
g. Cast iron.
h. 18-8 stainless steel.

Downloaded from http://www.everyspec.com

i. Lead-tin solders.
j. Lead.
k. Tin.
l. Nickel.
m. Brass.
n. Copper.
o. Bronze.
p. Copper-nickel alloys.
q. Monel.
r. Silver solder.
s. Silver.
t. Graphite.
u. Gold.
v. Platinum.

Any bonding aid should be designed to minimize the impedance between the objects as follows:

a. The sum of the width and thickness should be made as large as possible.
b. The distance across the path should be minimized.
c. The resistance of the joints and of the material used as a bonding aid should be minimized.

Several bonding references mention bond strap guidelines such as length-to-width ratio less than 5 or length-to-perimeter ratio less than 3.

7.4.2.11.4 Joining methods. The joining of two metal surfaces to provide a low-impedance bond path requires methods that result in high unit loads on each metal surface and that are unaffected by thermal cycling or vibration. In the unusual case where a bond is to be permanent, the metal surfaces may be joined by:

a. Welding including the exothermic process.
b. Brazing.
c. Sweating or swaging.

In addition, the surfaces should be clean and free of any protective coatings or corrosion. In the more common case where the metal surfaces must be separated periodically for maintenance or repair, they may be joined by:

a. Lock-thread devices.
b. Clamps.

The impedance of a semipermanent joint will be very sensitive to cleaning, surface preparations, and corrosion. In addition, no more than two metal surfaces should be joined at any semipermanent joint. However, when two metals must be bonded that are widely separated, a third metal, intermediate in the electrochemical series, may be inserted in the bond between the

Downloaded from http://www.everyspec.com

dissimilar metals to reduce galvanic reaction. This can be done by plating either one or both of the parts, or by inserting a thin piece of the third metal . If the bond is readily accessible for inspection and maintenance, a replaceable washer made from the most positive of the two metals may be inserted between the parts to be bonded. In any case, where dissimilar metals are used together, the DC resistance of the bond must be checked or the part replaced periodically. Serious bond degradation may occur long before any visible corrosion. A major factor in the degree of galvanic action occurring between two dissimilar metals is the relative areas exposed to the moist environment. The lower element on the electrochemical series (the cathode), while it will not corrode itself, is the donor of positive ions which result in corrosion of the higher metal (the anode). The amount of corrosion on the anode, therefore, increases with increasing cathode exposed area. Two means of minimizing corrosion are:

a. Minimize the physical size of the cathode.

b. Reduce the exposed area by applying a protective coating to the cathode surface or to both surfaces.

7.4.2.11.5 Cleaning of surfaces. The corrosion due to dissimilar metals is not the only source of chemical action to be considered in bonding design. Most metals, if left unprotected, form a surface oxide. Many of the common structural materials which resist corrosion are protected by this oxide. Included in this class of metals are:

a. Aluminum.
b. Magnesium.
c. Stainless steels.

In all cases, these surface oxides are resistive to some extent and most are classed as insulators. Therefore, before bonding, the surface must be cleaned of all oxides, grease, oil, and dirt. The following suggestions and references should adequately prepare most surfaces for bonding:

a. Aluminum and aluminum alloys - MIL-S-5002 and MIL-C-5541.
b. Magnesium - MIL-M-3171.
c. Copper, nickel, silver, brass, bronze-clean by de-greasing and slightly etching the surface.
d. Decreasing - Excessive amounts of grease or oil can be removed by vapor decreasing, ultrasonic cleaning, organic solvent (such as trichloroethane, trichloroethylene, or perchloroethylene), or emulsion cleaning which employs a mineral oil distillate and an emulsifying agent.
e. Etching of the surface - The metal can be dipped and agitated in a bath of chromic acid dry (CrO_3) - 2 lb/gal (239.65 kg/m^3) and sulfuric acid - 4 oz/gal (29.96 kg/m^3). Average dip time is from 2 to 30 s. Prolonged exposure of parts in this bath may cause severe etching and loss of dimension. The bath must be followed by a thorough rinse

Downloaded from http://www.everyspec.com

in cold running water and then in a hot water rinse to facilitate drying.

7.4.2.11.6 Protective finishes. Since most aeronautical electronic equipment is required to survive a salt fog or spray environment, corrosion resistance is needed to insure a good bond. A protective finish of some sort is required. There are three basic methods to insure protection of the bond:

a. Plating with gold, silver, nickel, tin, or other corrosion-resistant conductors.
b. Chemical films such as alodine, oakite, or iridite.
c. Coating of the entire joint with a protective material after the bond is made.

Each of these methods has numerous advantages and disadvantages in each case. For instance, platings have very low resistance but are sensitive to corrosion and damage; chemical films have much higher resistance but are not easily damaged.

7.4.2.11.7 Bonding summary. The effectiveness of the bond depends on its frequency range and environmental conditions. To accommodate these various considerations, the following summary of bonding considerations is provided:

a. Bonding must never cause damage to the two surfaces that are to be joined.
b. Bonds are always made best with the joining of similar metals.
c. Bonding jumpers (straps) are only substitutes for direct metal-to-metal bonds. If the jumpers are kept short and are higher in the electrochemical (galvanic) series than the bond members, they can be considered a reasonable substitute.
d. Since bonds are subject to corrosion and are susceptible to mechanical shock and vibration problems, their accessibility for preventative and unscheduled maintenance is a key design consideration.
e. It is important that either the bonding jumper or the direct metal-to-metal joint be able to carry the current that may be required to flow through it.
f. In the design of bond straps, the perimeter should be made as large as possible and the length as small as possible.

The following checklist for bonding should be used in bonding design:

a. Clean all bare metal mating surfaces.
b. Weld all mating surfaces, when possible.

Downloaded from http://www.everyspec.com

c. Where protective films are absolutely required, insure that the film material is a good conductor. Some suitable protective films are silver or gold plating or other metal plating of good conductivity.
d. Insure that the fastening method exerts sufficient pressure to hold the surfaces in contact in the presence of deforming stresses, shock, and vibrations associated with the equipment and its environment.
e. If the surfaces are subject to damage or corrosion in their storage and operating environments, provide surface protection according to step a, or take other suitable measures to insure the maintenance of the bond for the service life of the equipment.
f. Do not use paint to establish an electrical or RF bond.
g. Do not use threads of screws or bolts to establish RF bonds.
h. Do not use ohmmeters to evaluate RF bonds or RF gaskets.
i. Follow recommendations for bonding of dissimilar metals.
j. Compress all RF gaskets to form a continuous electrical contact around the entire perimeter of the opening.

7.4.2.12 Functional hardening. Functional hardening can be defined as a logical design that ensures protection against arbitrary transients through coding or timing discrimination, although with a price paid in complexity. This is to prevent one-shot failure. For example, a sequential system can be designed so that a particular sequence of pulses, instead of a single pulse, is necessary for a state change. The pulse sequence can be under the control of well-shielded circuitry so that the chance of the sequence appearing due to EMP-induced transients is small. This example is difficult to apply as a general system protection technique, but might be useful for some special circuits. Time discrimination can be used such that a signal must be present for a particular length of time that is longer than that likely due to EMP.

7.4.2.13 Operational hardening. A useful technique which can be employed, in some cases, for EMP protection is operational hardening. Operational hardening consists of override, restart, and other recovery functions associated with control centers. This technique, however, is only applicable whenever the time or the potential loss of information associated with the recovery function can be tolerated.

7.4.2.14 Electromagnetic shields.

7.4.2.14.1 General guidelines. An EM shield consists of a continuous metal (e.g., steel, soft iron, or copper) sheet surrounding the system to be protected. Shielding of individual components or small subsystems may not be practical, in some cases, because of the complexity of the task. Good shielding practice includes independent zone shields, several thin shields rather than one thick one, and continuous joints. The shield should not be used as a ground or return conductor, and sensitive equipment should be kept

Downloaded from http://www.everyspec.com

away from shield corners. Apertures in shields should be avoided as far as possible. Doors should be covered with metal sheet so that, when closed, they form a continuous part of the whole shield, and ventilation openings, which cannot be closed, should be protected by special types of screens or waveguides. In order not to jeopardize the effectiveness of the shielding, precautions must be taken in connection with penetrations of the housing by conductors such as pipes, conduits, and metal-sheathed cables.

7.4.2.14.2 Direct field penetration. Exterior metallic surfaces of the aircraft significantly reduce the penetration of electric fields. This reduction in penetration can be further enhanced by maintaining the continuity of metallic skin surfaces. The attenuation properties of the exterior metallic surfaces of the aircraft can be augmented by adhering to the following design guidelines:

a. When possible, never bond more than two surfaces at any one joint.
b. Keep the number of joints to a minimum.
c. Mating surfaces should vary smoothly along the joint line, and mating surfaces should be covered with conductive chemical coatings which will not degrade with time.

Direct penetration of time varying magnetic fields can induce currents on conducting surfaces. These currents can cause damage in the same manner as those related to electric fields. Direct penetration of magnetic fields into aircraft should not be allowed. Seams in the enclosure wall produce a type of degradation of the magnetic shielding effectiveness similar to that for electric shielding effectiveness. The seams in a magnetic shield should ideally have the same electrical parameters as the rest of the solid shield wall.

7.4.2.14.3 Welding. The most reliable method of constructing an enclosure to have an assured high level of performance is by means of welding. For very high-performance shields, the characteristics of the seam should be similar to those of the walls. This can be approached by the use of metal-inert gas welding.

7.4.2.14.4 Shielded enclosures and cables. If a large segment of the mission-essential equipment on board the aircraft includes sensitive solid-state devices, shielded enclosures (equipment bays) with shielded cable runs between the enclosures provide a practical method of hardening. Enclosures are constructed as an integral part of the air vehicle structure. The same EMP guidelines that apply to aircraft skin design apply to shielded enclosures. Wire mesh, honeycomb, or perforated metallic sheets should be bonded to metallic structure over unavoidable holes to provide shielding. Wire mesh provides shielding by reflection; honeycomb materials, by the attenuation properties of waveguides beyond the frequency. Cable shields and conduits should be bonded to shielded enclosures with circumferential

Downloaded from http://www.everyspec.com

metal-to-metal bonds. Good bonding to connectors and special connector designs are sometimes required to obtain required levels of shielding. For aircraft with a small amount of wiring, conduit shielding provides a cost-effective approach for EMP hardening.

7.4.2.14.4.1 Cable shielding effectiveness. The factors which should be considered when designing a shielded cable system in aircraft are:

a. Cable length - shielding effectiveness decreases with Increasing length.
b. Cable diameter - shielding effectiveness increases with increased diameter.
c. Number of wires - shielding effectiveness per wire increases with the number of wires in a given cable bundle.
d. Terminating impedance - shielding effectiveness decreases when the terminating impedance is less than the matched values, and increases for values greater than the matched value. (Avoid grounded wires to structure in a cable bundle.)
e. Arcing - shielding effectiveness must be sufficient to limit the current flowing in the capacitive impedance to structure to less than the Impulse breakdown value.
f. Raceways - shielding effectiveness decreases where the hot skin is a part of the raceway.
g. Location - shielding effectiveness increases for locations more remote from the hot skin structure or apertures.
h. Solid conduit - shielding effectiveness is determined by the losses at the joints.
i. Braided cable - double braid adds approximately 6 db of shielding effectiveness at the low end of the EMP band, and 20 db at the high end of the EMP band.
j. Cost and weight shield adds to the cost and weight of the air vehicle; however, a good shielding design minimizes this factor.

7.4.2.14.5 Vehicles. Shielding of the entire vehicle can be provided by a continuous thick metallic enclosure. However, in practice, this is seldom achieved since small cracks and holes, exposed cables and connectors, and communication antennas are nearly always present. Satisfactory EMP shielding can be achieved by minimizing cracks and holes. Energy within the system enclosure can also be reduced by compartment shielding or by internal cable shielding. Components within shielded containers should be as centrally located as possible, certainly away from corners where current concentrations exist.

7.4.2.14.5.1 Outside shields. Outside shields should be circumferentially bonded to cases at both ends, even if this creates a ground loop, because high-frequency leakage at the shield break is almost always greater than the ground-loop effect. Any loop created should be minimized in area to minimize

Downloaded from http://www.everyspec.com

magnetic pickup. If circumferential bonding cannot be used, a wide pigtail connection should be made, although this is usually ineffective at frequencies above 10 MHz. In addition, multiple shield grounds can be used to minimize antenna- type pickup. This requires grounding at about every one-eighth of a wavelength of the highest frequency of interest, but with a periodic spacing.

7.4.2.14.5.2 Open shields. An open shield in an EMP environment can result in two serious effects. First, the potential of the shield relative to the adjacent case or some other nearby ground can become great enough to cause arcing. Arcs can be damaging, and they radiate a broad spectrum of high-frequency energy that can be received by signal lines. Also, an open shield can propagate high frequencies internally by coaxial propagation. One possible solution to this dilemma is to enclose the signal shield (grounded at one end) in a separate RF shield (grounded at both ends). This helps to resolve the conflict between commonly used signal grounding practices and RF grounding practices. It is also sometimes useful to use orthogonal damping or reflecting plates through which the shield must pass.

7.4.2.14.6 Braided and optical coverage. Contrahelical woven (braided wire) shield is the most attractive shield mechanically and can be made electrically sound by using proper design. Specific guides are to achieve 85%-90% optical coverage and weave angles between 30° (52.36×10^{-2} rad) and 45° (78.54×10^{-2} rad) (measured from the cable axis). Optical coverage greater than 85% increases shielding effectiveness by about 1/2 db per percent increase. However, cable flexibility usually limits the combination of optical coverage and weave angle. In practice, it is possible to get only about 85% optical coverage for a 30° (52.36×10^{-2} rad) weave angle, 93% for a 40° (69.81×10^{-2} rad) weave angle, and 96% for a 45° (78.54×10^{-2} rad) weave angle. The shielding effectiveness for these combinations is almost equivalent since the effects of optical coverage and weave angle nearly compensate over the range quoted.

7.4.2.14.7 Insulation. Insulation between wire bundles and the cable shield has little effect on shielding effectiveness, but insulation between shield layers and around shield wires should be avoided. The latter insulation type adds bulk, stiffness, and cost with no improvement in shielding effectiveness, and it also can cause deleterious resonance effects that are a function of the cable length.

7.4.2.14.8 Solid shields. Solid shields can be very effective electrically, but special problems can make them unattractive. To obtain rotational action, rotational joints with RF gaskets must be used. While these joints test out very well initially, there is serious degradation due to vibration and other environmental effects as well as temperature effects on gaskets. Shielding effectiveness usually decreases as gasket thickness decreases.

Downloaded from http://www.everyspec.com

7.4.2.15 Cables. From the viewpoint of EMP protection, cable design represents an extension of both shielding and circuit practices. For cable shields, larger continuity at splices and good junction box contacts are desirable. Ordinary braid shielding should be avoided if more effective shielding can be used, as follows:

a. From an idealized hardening approach, no cabling system is best; however, the cabling system should be replaced by some other type of non-hard-wire communication link, such as a fiberoptic or millimeter wave system. The next best method capable of a continuous solid-wall cylindrical outer shield is used only to provide electric and magnetic shielding. It should not be used for signal return, as in most coaxial cable configurations. The interior communication cable should be in the form of twisted-pair cables connected to carefully balanced differential transformers and loads that are terminated symmetrically in the characteristic impedance for the differential and common modes. The cable sides of these transformers should not be grounded, and the interior equipment treated as the equipment configuration dictated. The parameters of the outer sheath require as thick a material as practicable with the highest permeability that can be obtained.

b. The surface transfer impedance of a cable with a braided outer conductor is such that shielding effectiveness is not greatly different from that of a solid outer conductor at lower frequencies, but shielding effectiveness rapidly decreases when the frequency is increased.

c. The material inductance value, associated with a simple coaxial cable, can be reduced by varying the braid angle (the angle between the braid and the axis of the inner conductor as measured from a line normal to the axis of the braid). Mutual inductance tends to be reduced as the braid angle is increased.

d. The value of the low-frequency transfer impedance, that is, the ohmic resistance per unit length, can be reduced by increasing the amount of copper in the cable, either the wire size or the number of wires for a given size.

e. The shielding effectiveness can also be improved by using multiple braids. The shielding effectiveness also tends to be improved as the amount of separation between the braids is increased.

Downloaded from http://www.everyspec.com

7.4.2.15.1 Design and control of wires and cables. The correct design and control of wires and wire bundles can reduce the coupling of EMP energy onto the wire of concern. The methods given in 7.4.2.15.1.1 through 7.4.2.15.1.3 are not replacements for good shielding design, but, rather, ways of improving the shielding effectiveness of the system.

7.4.2.15.1.1 Wiring types and methods. The use of a twisted pair of wires for the high and return of a circuit tends to reduce the sensitivity of the leads to magnetic (or H) field coupling. The amount of protection afforded by the twisting is related to the number of twists per inch and also to the uniformity of the twists. This method will reduce coupling to sensitive leads from nearby wires or current coupling surfaces. Other methods include:

a. Use shielded twisted pairs to protect sensitive circuits. The shields are usually low-frequency shields that are pigtailed at connectors and interfaces and grounded at a single point. Although such a shield is not a good RF shield, it does provide some attenuation of E fields and should reduce the sensitivity of the circuit to EMP.

b. Careful design of the shield pigtails to improve low-frequency shields on wire pairs or sensitive groups of wires in the high-frequency or EMP case. The shield should come as close to the interface or connector as possible, and the pigtail should be as short as possible. A pigtail does not need to be placed at the extreme end of the shield. Often, the pigtail could be shortened or the shielded portion of the wire increased by connecting the pigtail slightly back from the shield end.

c. Incorporate spares to allow for future changes in the design of cables. The effect of these spares during an EMP event is difficult to predict. When the length of the spare is less than 0.25 wavelength, the current induced on the spare depends on the terminations, whether the ends are left open and floating or connected to ground. The least amount of current will be induced on a spare that is not connected to ground or any load. For frequencies where the length of the spare is much greater than 0.25 wavelength, the current induced on the wire depends more on the wire-to-ground capacity.

7.4.2.15.1.2 Wire layout. Inductive and capacitive coupling between wires that are adjacent but originate in different sources could result in a single entry point, coupling EMP throughout the entire aircraft. The proper positioning of wires and wire bundles will minimize coupling between nonrelated units. Nonrelated wires should be spaced as far as possible from one another; any crossings should be at right angles.

Downloaded from http://www.everyspec.com

Wherever possible, grounded metal barriers should be placed between unlike leads. This may be accomplished by placing the wires or wire bundles in a trough in the side of a junction box or providing baffles to isolate sections of the junction box. The use of these procedures should increase the hardness of the overall system.

7.4.2.15.1.3 Wire and cable variability. Variations in wires and cables, wire lay, methods of terminating leads, length of pigtails, and other construction parameters make predictions of roblem areas, based on sample tests, unreliable. In this way, the system-to-system variability could cause a problem to be identified which only exists in a small part of the system or could mask serious deficiencies in the system. To avoid this, wires and wire bundles should be tightly controlled in several areas:

a. Wire lay - Wire lay should be controlled with respect to other wires and wire bundles and conductive surfaces. This applies to cables, as well as in bays and junction boxes. It is important to make the wiring and cabling as nearly identical unit-to-unit as possible.
b. Spares - Pay attention to wire lay but also to position and termination at wire ends.
c. Shield pigtails - Control length of pigtail, connection to the shield, and the position of the shield end.
d. Twisted pairs - Control number of twists and allow only small variations in twists per in (or per cm).

7.4.2.16 Connectors. Connectors can be a major source of EMP pickup. Vibration, corrosion, dirt, grit, or misuse can result in high transfer impedances in the immediate vicinity of the connectors for sheath currents. Good electrical continuity must be maintained between connector mating surfaces to reduce transfer impedances. The dominant method of pickup is associated with the transfer impedance. Again, it should be emphasized that the most important aspects of connectors may be determined, not by the idealized electrical performance, but rather by unanticipated aspects of the actual operating environment, temperature, vibration, and misuse. Backshell type connectors usually have low pickup.

7.4.2.17 Access doors. A major degradation of the shielding performance of an idealized enclosure occurs in the vicinity of the door. In this case, it is necessary to preserve the electrical continuity between the door and the rest of the enclosure. Resilient "fingerstock" made of flexible brass fingers attached to the door, which contact the fixed sill upon closure, is a favorite solution for doors and hatches that must be opened and closed frequently. The "fingerstock" should be installed in such a way that a wiping action occurs as the door or hatch is opened or closed. The mating surface to the "fingerstock" preferably should be tin-plated or covered with a surface that tends to reduce corrosion and yet maintain high electrical conductivity. To ensure more reliable performance, multiple rows of "fingerstock" can be employed.

Downloaded from http://www.everyspec.com

High-continuity seals can also be achieved through use of pneumatic means of hydraulically operated pressure.

7.4.2.18 Gaskets and seals. As noted in 7.4.2.11.4 and 7.4.2.11.7, possible oxide uildup between conducting metal sheets employed in shields tends to negate the shielding effectiveness. Therefore, if seams are to be formed by mating bare metals together, electrically clean surfaces should be employed for this area. The most successful material is one that can suffer some deformation and not corrode. This includes pure tin, gold, palladium, platinum, and silver. Often, zinc and plain cadmium or other materials with a very thin gold plating can be considered acceptable substitutes. Easily oxidized metals such as aluminum and iron should be avoided; obviously, the anodization of aluminum will completely negate the electrical conductivity of the pressure contact. Almost no oils support conduction. Contacts between bare metals must have a uniform pressure applied between the mating surfaces. This is quite frequently done by means of linear arrays of bolts. However, the bolts tend to weaken in pressure with time. It is necessary to retighten them occasionally to maintain shielding integrity, and afterwards, disassembly may be required to remove the corrosion product. Frequently, an EM gasket is employed to improve the foregoing situation. Such an EM gasket is a section of flexible conducting material that deforms to the irregularities associated with the seam joints or hinges or the connector fittings. The gasket material and related mating surfaces must not corrode and should also be immune to thermal and radiation effects.

7.4.2.19 Filters. Filters can be very effective tools to prevent damaging amount of energy from reaching the load. EMP filters are usually low-pass filters and should be either Tee-type or Pi-type filters. Low-pass T-filters are not desirable for EMP, because high voltages can develop across the input capacitor resulting in degradation or failure where the capacitor resonates with the source. Filters can only be used to attenuate signals out of the normal operating passband of the equipment. When the EMP spectrum is in the operating equipment passband, filters cannot be used effectively. A filter provides a reduction in power to a load of undesired signals while permitting desired signals to pass with little or no attenuation. The filter accomplishes this by discriminating against the frequency content of the undesirable signals, but, in some cases, the interfering signal may have high content in the desired band (pass), thus reducing filter effectiveness. A principal advantage of filters, as opposed to shielding, is the fact that filters should not deteriorate or degrade with time, since filters are less subject to corrosion, vibration, and other sources of physical damage or degradation. The difficulty associated with the use of filters to protect against EMP is caused by the large bandwidth of coupled EMP waveforms. Rejection of signals with such a large bandwidth and acceptance of desired signals may be inconsistent unless some portion of the EMP energy is allowed to enter the system along with the desired signal. Additional considerations for filters are:

Downloaded from http://www.everyspec.com

a. Considering the bandwidth problem, will the filter provide sufficient protection?
b. Will the filter degrade the operational performance of its associated subsystem?
c. Can the components of the filters themselves survive the EMP?

Most systems are required to meet not only EMP specifications, but also radio frequency interference (RFI), lightning, and high-level EM radiation requirements as well. For the non-EMP electromagnetic requirements, filters are extensively employed. Therefore, some appreciation of the non-EMP behavior of filters is needed in order to utilize filters intelligently for EMP hardening purposes. In addition, the filtering requirements for either EMP or RFI are different from those employed in communication circuits. The energy intercepted by a filter has to go somewhere. If it is reflected back into the input system, it will increase the EMP level there. If possible, it should be dumped as heat in an internal filter resistance. The construction and the installation of a protective device are often as critical as its design. If a filter is regarded as a controlled RF barrier, it is clear that its input and output must be isolated from one another. A good filter should be constructed in three separate EM sections: Input interface, interface with system to be protected, and output Interface. Cross coupling between input and output leads can nullify the effect if a large attenuation is clear that shielding by use of compartmentalization is required at EMP frequencies to make a filter effective. The coaxial design of the T-filter helps to reduce the effect of lead inductance on the capacitor, thus maintaining the effectiveness well above 100 MHz. Some general EMP filter design guidelines and specific details for the installation of filters to an enclosure or electronic package are:

a. Maintain RF isolation or shielding between the filter input and output terminals (use compartmentalization).
b. Mount the filters so that RF radiation cannot bypass the filter.
c. Generally, install one filter or one leg of multicircuit filters in each power line to be filtered. The usual practice is to install the filters on the outside of the enclosure against a metal panel of the enclosure.
d. Obtain good electrical grounding between the enclosure and the filter case.

The physical size and weight of EMP filters varies and is largely dependent on the current handling requirements. Typical filters that could be considered for filtering power lines and returns are filter pin connectors, hybrid dissipative filters, and feed-through capacitor filters. The catastrophic breakdown of filter is important, from an EMP viewpoint, and should be determined through laboratory testing. Other types of filter degradation are also of importance, such as arc-over of the series elements. If such an

Downloaded from http://www.everyspec.com

arc-over occurs, the filtering characteristics can be seriously degraded even though the filter itself may not be damaged.

7.4.2.19.1 Characteristics. To be an effective tool, the filter must have some or all the following characteristics:

a. Have extremely high or low input Impedance relative to the source in the frequency rejection (stop) band.
b. Have high loss to frequencies in the stop band.
c. Have high DC current carrying capability without changing stop band characteristics.
d. Prevent cross coupling.
e. Prevent arcing across its elements.
f. Have low DC resistance (primarily, a powerline consideration).
g. Have high reliability.

7.4.2.19.2 Filter application. Filters, including filter pin connectors, can be used to reduce EMP transients. Special filter applications are:

a. Filtering of power leads with hybrid filters.

(1) Hybrid filters are best suited for EMP because they dissipate the energy in the stop band rather than reflect. Hybrid filters are usually very rugged and can handle relatively large currents than filter pin connectors. Hybrid filters are thus well suited for filtering power lines.

(2) If the currents on the lines are too large and are liable to induce failure of the filter, a filter and arc suppressor combination should be considered, or feed-through capacitors used.

b. Use of feed-through capacitors on high-current power lines.

(1) Feed-through capacitors are recommended to shunt off high RF currents on power lines. However, it is necessary to carefully select the feed-through to insure that the EMP voltages will not break down the capacitive element. Feed-through connectors are also well suited at enclosure walls to provide isolation from input to output terminals.

c. Use of filters on engine interface lines.

(1) It is expected that a large amount of energy can be coupled onto the engine electrical and

Downloaded from http://www.everyspec.com

hydraulic lines due to EMP fields penetrating at the many engine POEs.

(2) To avoid coupling the energy at the engine compartment into the aircraft fuselage, it is recommended that the engine interface electrical lines be filtered. In order to shunt energy off the engine hydraulic lines, it is recommended that where these lines pass through the fuselage and bulkheads, feed-through connectors be provided. This should reduce much of the energy entering the fuselage and keep the energy on the exterior of the aircraft.

RF bypass capacitors or a filter with high current-handling capability should be used wherever possible on the engine interface lines to protect electronics either in the engine compartment or in the interior of the aircraft. Furthermore, if filters are used, it is very important to assure that the filter be isolated from the filter output to prevent cross coupling.

7.4.2.20 Transformers, chokes, and coils. Most commonly, available mode-isolation transformers will exhibit some undesired mutual coupling between the primary and secondary windings. This is suppressed but not eliminated by means of electrostatic shields between the primary and the secondary. Since the behavior of coaxial cable with balanced wiring is greatly influenced by the symmetry of the termination, another requirement for a mode-isolation transformer is that the same shunt impedance be exhibited to either wire on the primary side to ground. The nonlinear behavior of the mode-isolation transformer is also of interest. Arc- overs between primary and secondary, although possibly non-catastrophic for the transformer, can provide temporary high-energy paths to more sensitive components. Arc-overs between one primary terminal and ground cause more conversion and transform nearly one-half (or all) of the common-mode voltage into the differential mode. Saturation of the core of the bifilar choke may also occur if long-duration unipolar transients are likely. Power transformers, because of the high levels of operating voltages, are relatively resistant to direct damage, especially if protected by a fast-acting surge arrester; however, the exposure levels are much higher. Power transformers are also designed to provide some protection by reducing common-mode voltages and the differential voltage levels by turns-ratio transformation. In addition, the use of an internal electrostatic shield between windings has been thought to be highly beneficial. However, tests have indicated that neither the turns-ratio reduction nor the static shield is significantly beneficial from an EMP viewpoint. In either case, interwinding capacitances have been found to be responsible for relatively high coupling between primary and secondary circuits in the 1 to 10 MHz frequency range. Both the bifilar choke and the mode-isolation transformer may be subjected to very high levels of common-mode

Downloaded from http://www.everyspec.com

impulse voltages; hence, tests may be required to ensure that these devices will not fail nor arc-over under high-level transient conditions. Coils and transformers can be damaged by excessive levels of applied voltage, either DC or impulse type. Failure thresholds for EMP transients are comparable to the transient test levels employed for lightning protection.

7.4.2.21 Surge protection devices. Spark gaps, Zener diodes, and varistors are not recommended, in general, as a means of circuit hardening. Small, current-limited Zener diodes internal to MOS devices are more acceptable. Surge protective devices are indispensable for the protection of receiver inputs. The devices used should be sufficiently fast to prevent appreciable overshoot. In many cases, it may be necessary to use two devices, such as a spark gap (to reflect most of the energy) followed by a Zener diode (to clip the fast rise overshoot of the spark gap). Varistors are, in general, too slow by themselves for EMP protection. The main purposes of a surge arrester are to detect the surge, decouple, and reflect and/or shunt the energy before damage can occur to the equipment being protected. In any application of a surge arrester or any other protective device, a number of questions must be answered:

a. Will the device adversely affect normal operations?
b. What is the susceptibility of the circuits to be protected?
c. How effectively will the device reduce the expected range of transients, compared to the susceptibility level of the circuits to be protected?
d. How much EMP energy, power, or current can be absorbed by the protective device?

Of additional concern is the ability to extinguish arcing. Usually used in power systems, transmitters and data links, surge arresters are classified into the following two categories:

a. Soft limiters.
   (1) Capacitors.
   (2) Varistors - nonlinear voltage-dependent resistors
   $I = KV^{\alpha}$
   where a is a measure of how well a suppressor approaches the ideal. Good surge protective devices generally have very little frequency selectivity.

b. Hard limiters - breakdown-type devices.
   (1) High impedance to low impedance to high impedance.
   (2) Gas gap (glow region, arc region, spark gap).
   (3) Carbon blocks.
   (4) Zener diodes.
   (5) Rectifier diodes.

Downloaded from http://www.everyspec.com

Typical performances of surge arresters in voltage range are:

a.	Spark gap	1 to 1000 KV.
b.	Diode	0.0004 to 0.75 KV.
c.	Electromechanical	0.0005 to 10 KV.
d.	Hybrid	0.0005 to 1000 KV, depending upon design.

Gap type surge arresters are generally heavy duty but have the disadvantage of a long response time and often excessive spiking which is directly proportional to the current rating. The semiconductor devices are less robust but offer the advantage of faster reaction time. However, the reaction time is still sufficiently slow to allow energy throughput capable of damaging the more sensitive semiconductor devices. Hence, additional hybrid protection techniques may be required in such cases. Gas gaps can handle the highest peak pulse voltage range (1.1 to 6 KV), varistors the intermediate range (0.5 to 4 KV), and semiconductor devices the lowest range (0.1 to 3 KV). The approximate allowable energy throughput for the devices are:

a. Gas gaps, 5 x 10^{4} to 7 x 10^{-3} J.
b. Varistors, 5 x 10^{-5} to 3 x 10^{-5} J.
c. Semiconductor devices, 2 x 10^{-6} to 1.8 x 10^{-3} J.

7.4.2.21.1 Spark gaps. Spark gaps or protector blocks are generally composed of two metal or carbon electrodes separated by a dielectric, usually air at atmospheric pressure. The sparkover voltage is determined by the electrode spacing and geometry, dielectric material and density, and the voltage waveshape. Electrode spacing may vary from 2.8 to 30 mil (7.11 x 10^{-5} to 76.20 X 10^{-5} m), with 2.8 to 6 mil (7.11 x 10^{-5} to 15.24 X 10^{-5} m) gaps typical of carbon block protectors used by the telephone industry. The DC or 60 Hz sparkover potential varies from 500 V for the smallest gap, up to 2500 V or higher for the widest spacing, with air dielectric at atmospheric pressure. Sparkover occurs very rapidly between 0.05 and 0.1 µs, but appears at higher potentials for steep wavefront surges because of the delay in gap ionization. For example, a carbon 2.8 mil (7.11 x 10^{-5} m) gap fires at 500 V DC. A wavefront with a slope of 500 V/ s causes sparkover at 600 V after about 1 s, while a wavefront with a 10,000 V/ µs slope causes sparkover after 80 ns at 800 V. Advantages of spark gap protectors:

a. Simple and reliable.
b. Easily fabricated.
c. Very low voltage drop during conducting stage.
d. Bilateral operation - same characteristics for either polarity.

Downloaded from http://www.everyspec.com

Disadvantages of spark gap protectors:

a. Relatively high sparkover voltage.
b. Simple gaps do not extinguish the following current until the voltage is removed (this disadvantage affects power circuits more than it does low-voltage signal circuits).

7.4.2.21.2 Gas diodes. A gas tube protector consists basically of one or more discharge gaps enclosed in an envelope and containing inert gas at reduced pressure. Their steady-state, current-carrying ability is generally much less than for carbon blocks which, under the influence of heat generated by a sustained discharge, cause a fusible element to melt, bringing metal electrodes into direct contact. A discharge gap of a given spacing will sparkover in a gas at reduced pressure at much lower potential voltages than at normal atmospheric pressure. The most objectionable characteristic of gas tubes is their relatively long ionizing time and lack of any fail-safe characteristic. Because gas tubes employ larger gap spacing than the preceding, any defect in the seal which returns the pressure to atmospheric can cause the operating value of the tube to exceed 2000 V for electrode spacings of 20 to 30 mils (50.80×10^{-5} to 76.20×10^{-5} m). Improved manufacturing techniques and the use of inexpensive radioactive gases such as krypton 85 and tritium to improve ionizing time may overcome these objectionable features. A miniaturized metal envelope tube (WE-460), put in service by Western Electric (WE), appears to be a significant improvement over previously available tubes. In applications with less stringent requirements, even ordinary neon bulbs can be viewed as low-voltage spark gaps. Advantages of gas diodes:

a. Low sparkover voltage -as low as from 60 to 100 V.
b. Ability to pass high currents for a short period of time.
c. Usually self-healing.
d. May be low cost.
e. May be small size.

Disadvantages of gas diodes:

a. Sparkover voltage increases with steepness of surge wave front more rapidly than for spark gap protectors.
b. Do not extinguish current until voltage drops to some value below the sparkover potential.

7.4.2.21.3 Zener diodes and other semiconductor devices. Zener diodes can be used to clip a surge voltage to the Zener voltage level and hold it there. This feature makes them well adapted to the protection of semiconductor devices, or to others having low tolerance to voltage spikes. Other semiconductor diodes can also be used as protective devices. This includes standard forward conducting diodes and controlled avalanche rectifiers (characteristics similar to Zener diodes). For bipolar operation, units in a

Downloaded from http://www.everyspec.com

single package having two ordinary semiconductor diode junctions in parallel, oppositely poled, are available. These are useful where limitation in the low-voltage range (about 0.5 to 3 V) is required. For higher ranges, several types of silicon alloy diodes are available in the range of 6 to 150 peak V. Silicon junctions (both alloy and diffused) are generally preferred over germanium for these applications because of their greater powerhandling ability and a much sharper transition from the high- to the low-resistance region. Inverse surge-carrying ability of silicon diodes varies widely, from the low of about 1 A peak current for a surge, up to about 90 peak A. It should be noted that even semiconductor diodes have finite conduction times. Some diodes are very fast, operating in the nanosecond regime, while others, especially types used as rectifiers, have conduction delays on the order of microseconds. Thus, diodes which may operate essentially instantaneously relative to lightning-induced current waveshapes may have significant conduction delays relative to EMP-induced current waveshapes. Advantages of semiconductor diodes:

a. Small size.
b. Easily mounted.
c. Low firing voltages.
d. Low dynamic impedance when conducting
e. Self-extinguishing when circuit returns to normal state (especially Zener diodes).
f. Low cost of some types.
g. Good surge current ratings.

Disadvantages of semiconductor diodes:

a. Voltage across Zener diodes does not switch to a low value during conduction.
b. Conduction may occur with standard diodes on normal signals with signal clipping and nonlinear product generation effects.
c. Relatively high capacitance.

7.4.2.22 Current-limiting resistors. A means of hardening semiconductor circuits against burnout is current-limiting resistors. Under abnormal Input conditions, a circuit malfunction may include semiconductor junctions biased well above safer power levels. A current-limiting resistor will dissipate the excess power in Itself rather than in the associated junction or cause the device to saturate with a low junction voltage drop, reducing the power dissipated in the junction. A current-limiting resistor in the input lead of a device coupled with another path to common will protect the input junction itself and prevent excessive current from being drawn through an associated base-collector junction. A current-limiting resistor in the emitter lead of a circuit will stabilize the circuit against thermal runaway effects brought on by excessive transient power dissipation in the device. A current-limiting resistor in the collector or power lead will reduce the maximum possible

Downloaded from http://www.everyspec.com

power dissipated in the collector junction. A resistor in series with a substrate bias wire leading to an IC will protect an IC from excessive currents drawn due to abnormal substrate conditions.

7.4.2.23 Disconnects. Fuse relays, circuit breakers, and crowbar circuits can be considered as hardening components. These devices can be designed to remove the less robust circuits from power sources during transient-initiated periods before catastrophic damage occurs. In the case of EMP, the picked-up surge can initiate arc-overs (including surge arresters) in subsystems designed to supply large amounts of electrical RF power on a normal basis. These devices, although too slow to suppress the initial surge, can serve a vital function by limiting the follow- through power. Crowbar circuits are somewhat different from fuses and circuit breakers. These circuits, in effect, can place a dead short (or crowbar) across conductors. This action prevents transient-initiated damage from power follow-through, particularly for partial short circuits. Crowbar circuits require source triggering or sensing for initiation. In the case RF transmitters, impedance bridges or photocells can be used to sense the arc in the exposed twin-sphere type of gas surge arrester (at the base of a large transmitting antenna). In other cases, the trigger can be initiated by a voltage-spike-sensing circuit. Resets are obviously desired when functioning is required during the EMP threat period. Training maintenance personnel to promptly replace fuses or reset breakers is essential.

7.4.2.24 Protective hybrids. Few of the protective devices mentioned are by themselves sufficient as a complete solution to a specific problem because each has some limitation in speed of response, voltage rating, power dissipation capacity, or reset time. Hence, most satisfactory protective devices are hybrids. For example, a bandpass filter may be used preceding a lightning arrester. The filter tends to stretch out the rise time of the EMP, thus providing sufficient time for the arrester to become operative. In general, a hybrid protection device must be designed specifically for each application.

7.4.2.25 Attenuation characteristics of hardening techniques. The EMP protection provided by alternative hardening techniques affects the selection of a hardening approach. Attenuation characteristics of hardening techniques are not invariate, but they do provide a general indication of relative attenuation techniques which could be used in aircraft design. This information, combined with knowledge of the magnitudes and frequencies of the skin currents and the susceptibility of the electrical and electronic equipment, will aid the aircraft designer in selecting an EMP hardening approach for a specific application. The approximate attenuation associated with various EMP hardening techniques for aircraft is:

Downloaded from http://www.everyspec.com

a.	Solid cable shields	82 db.
b.	Cable trays	78 db.
c.	Double-braid shields	68 db.
d.	Surge arresters	58 db.
e.	Airframe shield	58 db.
f.	EMI filters	58 db.
g.	Improved bonding	58 db.
h.	RF gaskets	58 db.
i.	Single-braid shield	45 db.
j.	Feed-through capacitor	40 db.
k.	Windshield closure	40 db.
l	Filter connectors	40 db.
m.	Isolation transformer	40 db.
n.	Cable isolation	30 db.
o.	Twisted wires circumvention	30 db.
p.	Electronic equipment hardening	25 db.
q.	Differential mode	25 db.

7.4.2.26 Effectiveness of hardness approaches. General information on common hardening techniques versus various EM environments is provided in 7.4.2.26.1 through 7.4.2.26.5. Numbers from 1 to 4 are used to describe relative hardness of each technique. These numbers are defined below:

a. 1 = near total fix or primary purpose.
b. 2 = powerful tool but needs some other hardening consideration.
c. 3 = useful but must be supplemented.
d. 4 = minor effect.

7.4.2.26.1 One-point ground. The general effectiveness of a one-point grounding scheme is:

a.	EMP	4.
b.	EMI	3.
c.	EMR/EMC	3.
d.	IEMP (SGEMP)	4.
e.	Lightning	2.
f.	Static electricity	1.
g.	Code leakage	4.

7.4.2.26.2 Total shielded twisted pair concept. The general effectiveness of the total shielded and twisted pair concept is:

a.	EMP	4.
b.	EMI	3.
c.	EMR/EMC	3.
d.	IEMP (SGEMP)	2.
e.	Lightning	3.
f.	Static electricity	4.
g.	Code leakage	3.

Downloaded from http://www.everyspec.com

7.4.2.26.3 Separation of noise source circuitry. The general effectiveness of the separation of noise circuitry is:

a.	EMP	3.
b.	EMI	2.
c.	EMR/EMC	3.
d.	IEMP (SGEMP)	4.
e.	Lightning	3.
f.	Static electricity	4.
g.	Code leakage	4.

7.4.2.26.4 Total exterior shield. The general effectiveness of total exterior shielding is:

a.	EMP	1.
b.	EMI	4.
c.	EMR/EMC	2.*
d.	IEMP (SGEMP)	**
e.	Lightning	3.
f.	Static electricity	3.
g.	Code leakage	3.

*Except where small holes or cracks occur in the GHz range. **Effect unsure.

7.4.2.26.5 Compartmentalized and filtered sensitive circuits. The general effectiveness of compartmentalized and filtered sensitive circuits is:

a.	EMP	2.
b.	EMI	3.
c.	EMR/EMC	3.
d.	IEMP (SGEMP)	3.
e.	Lightning	3.
f.	Static electricity	4.*
g.	Code leakage	1.

*If a one-point ground and an external shield is used, no static discharge would occur; hence, filtering would be unnecessary. But, if isolated shielding resulting in an arc did occur, this would help immensely.

7.4.2.27 Hardening trade-offs. Hardening techniques generally cause additional cost, size, and weight penalties. The amount of the penalty is highly variable, depending upon the technique used and how it is applied. It is important to remember that each technique discussed will involve some trade-offs which are not explicitly discussed, but which must be considered by the user. This applies to hardening to all other nuclear weapons effects as

Downloaded from http://www.everyspec.com

well as EMP. Hardening in general should be balanced. It does no significant good to make one vulnerable component extremely hard if another is extremely soft. It also does no significant good to make a component extremely hard to one environment and soft to another. Probably the most important consideration of all is to assure that hardening is implemented during the system design phases rather than being implemented as a fix after tests reveal vulnerable components.

7.4.2.28 Construction techniques. In determining the EMP hardening approach, the designer should keep in mind the possible application of standard construction and materials to improve the EM shielding and minimize the impact in production cost due to EMP hardening. For example:

a. The use of a particular corrosive protection process can significantly increase shielding.

b. Joints in metallic skin panels can be designed with high and continuous electrical continuity to increase shielding effectiveness with negligible penalty.

c. Wire routing can be configured to minimize EMP coupling, which reduces the amount of shielding required. A tree structure wire layout with branch circuits to individual devices is used for EMP purposes to minimize loop coupling. Circuits are segregated to satisfy EMI requirements. Wire cables should be separated from gaps or aperture in the fuselage and separated from conducting rods or linkages as much as practical to minimize EMP coupling.

7.4.2.29 Power circuits. Electrical power systems can be AC (60 or 400 cycles) or DC. Both have advantages:

a. AC systems are more flexible, have better voltage regulation, and weigh less if more than a few kilowatts are used.

b. DC systems are attractive because of simplicity, safety, and the ready availability of components.

For systems requiring DC power, the use of isolation transformers constitutes a good approach for rejecting the EMP-induced common mode currents (i.e., unidirectional currents induced on the entire wire bundle). For both AC and DC systems, one-point grounding, wire returns, and twisted pairs can be used; these approaches should have priority over shielding.

7.4.2.30 Plume effects. On a missile in flight, the skin current may be altered by the presence of the conducting rocket exhaust. Skin current calculations should include plume effects, when appropriate.

Downloaded from http://www.everyspec.com

7.4.2.31 EMP retrofit. Retrofit is not necessarily an optimal technique for all systems, but it is a powerful technique if good design practices are followed. Possible significant violations are:

a. Wires penetrating the shield.
b. Plumes penetrating the shield.
c. Wires running close to holes in the shield.
d. Poor RF connectors or joints used.
e. Nonoptimal braid designs used in high-current areas.

In aircraft, the major difference from missiles is probably the extensive use of deliberate antennas. In cases where vulnerability is indicated (usually on sensitive receivers), arc suppressor and filter combinations should be used. Most aircraft have leaky Faraday cage designs; this can be corrected with the fixes discussed. Attempting to minimize the time in which violations of the total shield concept exist (for example, bomb bay doors open) is a possibility; however, such fixes are risky since they can be minimized in effect by enemy strategy and are useful only for inadvertent threats. Filtering wires which penetrate the skin of the aircraft is an excellent approach. In a bomb bay area, where many unshielded cables exist, a filtering approach on sensitive compartmentalized packages is the optimum approach.

7.4.2.32 EMP effect uncertainties. Because of the complexities of the EMP response, sole reliance cannot be placed on predictions based on analysis. Testing is essential to verify analysis of devices, components, and complete systems early in the design stage. Testing also is the only known method that can be used to reveal unexpected effects. These may include coupling or interaction modes or weaknesses that were overlooked during the design. In some simple systems, nonlinear interaction effects can be analyzed numerically, but, as a general rule, testing is necessary to reveal them. As a result of the test, many of the original approximations can be refined for future analysis, and the data can Improve the analytic capability for more complex problems. Testing also locates weak or susceptible points in components or systems early enough for economic improvement. After the improvements, testing confirms that the performance is brought up to standard. A complete system should be tested to verify that it has been hardened to the desired level; subsequent testing should be carried out to indicate if any degradation has resulted from environmental or human factors.

7.4.3 Optical systems. The use of fiber optics can be made to decouple or circumvent EMP energy. Fiber optic coupling has both advantages and disadvantages relative to electrical conductors. These advantages and disadvantages are:

Downloaded from http://www.everyspec.com

a. Advantages.

(1) Total electrical isolation.
(2) No dielectric breakdown.
(3) No ringing or echoes.
(4) An order of magnitude reduction in weight.
(5) Reduced power requirements.
(6) A slight reduction in cost (depends on system to be converted).
(7) At least an order of magnitude increase in bandwidth (200 MHz, on 300 m cable).
(8) Usually necessitates only minor modifications to equipment.

b. Disadvantages.

(1) Low shear strength.
(2) Incomplete environmental testing to date.
(3) Existence of trade-offs in using high-loss fibers and low-loss fibers.
(4) Possible production of spurious light signals by nuclear radiation.

7.4.4 Anti-icing subsystems. Engine nacelle and wing anti-icing subsystems should be protected from degradation by the EMP. Malfunction of the anti-icing subsystem will affect mission completion in many cases. This subsystem is susceptible to both EMP and thermal effects because of its proximity to exterior surfaces.

7.4.5 Fire extinguishing subsystems. The electrical and electronic portions of the fire extinguishing subsystems should be designed or protected in a manner which will preclude inadvertent activation by the EMP. Additionally, this subsystem must not degrade as a result of the EMP and fail to activate upon command or demand. Indications should be provided which will notify the pilot of any degradation in the capability of the fire extinguishing subsystem. Applicable documents are MIL-C-22284, MIL-C-22285, MIL-D-27729, MIL-F-7872, MIL-F-23447, and MIL-M-12218.

7.4.6 Crew escape subsystem. The electrical and electronic portions of the crew escape systems such as initiation circuitry should be designed or protected in a manner which will disallow inadvertent activation or degradation by the EMP. Warning of escape system degradation should be available to the pilot. Applicable documents are MIL- C-83124, MIL-C-83125, MIL-E-9426, MIL-P-83126, MIL-S-9479, MIL-S-18471, and MIL-S-58095.

7.4.7 Fuel subsystem. Electrical and electronic components of the fuel subsystem such as electronic fuel control and fuel supply indicator

Downloaded from http://www.everyspec.com

circuitry should be designed or protected in a manner which will preclude malfunctions caused by the EMP. Pilot warning should be given if such degradations occur. Applicable documents are MIL-B-83054, MIL-F-17874, MIL-F-38363, MIL-G-5572, MIL-H-7061, MIL-H-18288, MIL-S-8802, MIL-T-5578, MIL-T-5624, MIL-T-25783, MIL-T-27422, MIL-T-83133, and MIL-HDBK-221(WP).

7.4.8 Propulsion subsystem. Electrical and electronic components of the propulsion subsystem such as fuel ignition devices and circuitry should be protected from EMP-induced transients. Ignition systems of reciprocating, turbojet, and turbofan engines are included in this category and should be examined for their EMP vulnerability. Damage to a reciprocating engine ignition system can result in cessation of engine operations, whereas damage to a turbojet or turbofan engine ignition system may result in loss of restart capability. Applicable documents are MIL-E-5007, MIL-E-8593, MIL-G-83363, MIL-I-83294, MIL-L-7808, MIL-L-21058, MIL-L-23699, MIL-P-26366, MIL-T-5579, MIL-T-5955, and MIL-HDBK-XXX-3.

7.4.9 Landing and position lights. The electrical wiring associated with landing and position lights is vulnerable to the EMP threat mechanism. Such lighting circuits can be protected by the means previously outlined.

Downloaded from http://www.everyspec.com

8. EVALUATION GUIDELINES

8.1 General evaluation procedure. Survivability evaluation provides data which permit determinations of levels of combat attrition of aircraft MEWS and effectiveness of proposed survivability enhancement techniques to various threats, levels, and encounter conditions. Basic considerations are enumerated. The survivability evaluation methodologies specified herein or alternate methodologies, as approved by the procuring agency, are recommended. These methodologies can provide effective iterative survivability capabilities during each phase of the total life cycle (i.e., conceptual, preliminary, point design, and operational). The methodology chosen must be suitable for use by the Navy during the operational life of the aircraft MEWS, so that required survivability evaluation due to changes in mission, tactics, threat, and aircraft configuration can be made.

8.1.1 Mission-threat evaluation. The missions, threats, and threat effects considerations during the life cycle survivability evaluation are those specified by the aircraft MEWS specifications, operational requirements, and implementing documentation. Each of the mission-threat evaluations during the life cycle of the aircraft should include:

a. Identifying and describing the mission(s).
b. Defining the scenario(s).
c. Identifying the threat(s) or threat effects.
d. Defining the operational modes of subsystems.
e. Defining the aircraft-threat encounter conditions.

The mission descriptions include such items as mission objectives, measures of effectiveness, sortie structure and flight profiles. The geographic, physics? environment and force structures are defined in the scenarios. The threat identification contains a description of the threat characteristics and the deployment and use of the specific threat systems. The operational mode of the subsystem covers such items as the sensors, fire control, and countermeasures employed by the aircraft weapon system. The aircraft-threat encounter conditions provide information relative to the operational conditions of the aircraft weapon systems such as speed, altitude, slant range, maneuvers, tactics and configuration variables (e.g., fuel, stores).

8.1.1.1 Mission element need statement. The MENS describes a mission need and justifies the start of a major weapon systems acquisition program. Usually developed in OPNAV and approved by the Secretary of the Navy, it is submitted to the Secretary of Defense for a decision to proceed. The MENS requires an assessment of the threat projected through the time frame for which the capability is required. DOD Directive 5000.2 describes the content of a MENS.

Downloaded from http://www.everyspec.com

8.1.1.2 Mission requirements. The mission requirements and essential functions for flight and mission objectives should be determined for each mission phase. The flight and mission essential functions should be established down to the level that individual aircraft subsystem and major components required to perform the functions can be identified.

8.1.1.3 Scenarios. The scenario(s) should provide a variety of conditions describing the design mission for the aircraft weapon system. The scenario should provide information as to the type of enemy forces the aircraft MEWS is expected to encounter. This information should also Include the type of climate and weather factors (conditions) for which the aircraft weapon system planner intends to deploy the system.

8.1.1.4 Threat analysis. The threat analysis results should define each operational mode of the aircraft weapon system and associated threats and effects. The defined flight profile and threat should be analyzed to define the encounter conditions associated with each. These conditions should be bases for recommending survivability enhancement design features and conducting survivability evaluation and trade-off studies. Survivability design criteria should be influenced by this effort. The mission description should contain sufficient detail to provide adequate aircraft configuration factors (e.g., weights, CG locations, fuel status, armament loadings) and proposed operational concepts and tactics. The threat should be categorized for each type of mission and should include enough detail to allow the evaluator to select the needed data for subsequent evaluations.

8.1.2 Susceptibility to detection evaluation. The combined characteristics of all the factors which determine the probability of detection of an aircraft is termed detection susceptibility. The susceptibility evaluation process involves enemy weapon system characteristics, the performance characteristics of the aircraft weapon system defined by the mission threat evaluation/scenario, and the detectable signatures of the aircraft.

8.1.2.1 Detectable signatures. Detectable signatures include all signatures which can be used to detect and track the aircraft. An aircraft signature analysis should be conducted and updated as required to assess the detection susceptibility of the aircraft. Current signature types include radar, infrared, visual, and aural. The results of this analysis will be used as guidance for minimizing the aircraft signature throughout the design cycle of the aircraft. These results will also be used to establish a signature reduction program for aircraft concepts when the conceptual design does not meet the specification minimum signature.

8.1.3 Vulnerability evaluation. Vulnerability is the characteristics of a system which causes it to suffer a definite degradation (incapability to perform the designated mission) as a result of having been subjected to a certain level of effects in an unnatural (man-made) hostile environment.

Downloaded from http://www.everyspec.com

The objective of the vulnerability evaluation is to quantify the air weapon system vulnerability characteristics. There are several steps and intervals (secondary evaluations) which must be performed in order to reach a measurable and quantifiable vulnerability characteristic. This evaluation establishes the baseline characteristics for the total survivability evaluation. Usually, this evaluation will be performed at the request of the Project Management Air (PMA) office. The major elements of the vulnerability evaluation include:

a. Aircraft weapon system description.
b. FMEA.
c. Criticality analysis.
d. Damage mode and effects analysis (DMEA).
e. Vulnerability results.

8.1.3.1 Aircraft weapon system description. The aircraft MEWS under consideration must be defined, usually by name, model and configuration, in various phases of the developmental cycle from such items as detailed engineering drawings, operations (flight) manuals, maintenance manuals, and by the identification number of the production weapon system.

8.1.3.2 Failure mode and effects analysis. The FMEA is a study of the results or effects of single, independent component failure in a system. It is a single failure analysis. Each component and its effects, both primary and secondary or cascading, are considered to be the only failures in the system. Guidelines for conducting the FMEA are provided in MIL-STD-1629. The FMEA provides the framework for subsequent vulnerability and survivability evaluations and must therefore provide results with high levels of confidence. Performance of an adequate FMEA will result in the identification of mission and flight critical subsystems and components and definitions of their criticalities. Performance of a DMEA requires determination of component and subsystem probabilities of kill conditional upon the occurrence of a hit or interaction with a threat mechanism. These probabilities are usually associated with a time to aircraft kill which in turn are associated with specified kill levels. The accepted definitions of kill levels are identified in MIL- STD- 2089.

8.1.4 Survivability evaluation. The evaluation of the survivability of an aircraft MEWS is stochastic in nature and provides a quantitative measure in the form of a survival probability relative to a predefine scenario. It should be assured that, in a complete survivability analysis, all weapon effects from all expected weapons are considered in their proper environmental, chronological, and synergistic order of occurrence. An aircraft MEWS may be exposed to both nuclear weapons effects and nonnuclear weapons effects in the same scenario. In such situations, survivability expertise from both nuclear and nonnuclear disciplines must be effectively combined and coordinated in order to successfully culminate into a complete survivability evaluation.

Downloaded from http://www.everyspec.com

8.2 Hardness verification. Verification of nuclear hardness can be approached in two ways:

a. Analytically.
b. Testing.

Some verification problems are too complex to be treated analytically and may require verification through testing, while other problems may not be conducive to testing and can be solved more efficiently through analytical evaluation. Between these two approaches lies the problem solution involving some degree of both analytical evaluation and testing combined in the proper measure to achieve the desired verification level. The most useful and efficient approach will be determined by a combination of the following factors:

a. The ability of the verification team to understand and clearly define the characteristics of the problem.

b. The ability of the verification team to determine and enumerate feasible alternative approaches.

c. The confidence level associated with each possible approach.

d. The funding and time constraints imposed on the problem solution.

e. The analytical and testing facilities available for problem solution.

8.2.1 Verification by analysis. Verification of nuclear hardness by testing is usually an expensive process; consequently, testing should be limited to that required to insure the validity of analytical methods of verification. The analytical methods can then be used to evaluate and verify the nuclear hardness of an aircraft at minimal expense.

8.2.2 Verification by test. It is generally desirable that every aircraft be tested in the environment for which it is designed. Testing to verify structural design may be performed on the entire aircraft as a unit or on the different components from which the aircraft is built. The testing must verify structure hardness to both blast and thermal effects. Special facilities are required for such testing.

8.3 Blast. The basic considerations which should be addressed when evaluating or verifying blast effects upon aircraft and identifying techniques and relevant sources of evaluation information are provided in 8.3.1 through 8.3.7.

Downloaded from http://www.everyspec.com

8.3.1 Parked aircraft. Considerations which should be taken into account in the evaluation of blast survivability of parked aircraft are:

a. Blast effects upon aircraft parked with wings, tails, rotors, or fuselages folded.
b. Blast effects upon groups of aircraft parked in proximity on carrier or hangar decks.
c. Blast effects upon aircraft tied down on runways or carrier decks.
d. Blast effects upon aircraft with avionics, service, or bomb bay doors open.
e. Blast damage to wing, tail, fuselage, or blade fold sub-systems which would disallow movement of these structures into a flight-ready or stowed condition.
f. Blast effects on aircraft with open canopies.
g. Damage to aircraft resulting from damage to aircraft shelters.
h. Damage to aircraft caused by blast effects on handling, tie-down, support, or other nearby equipment.
i. Inoperability of aircraft due to damaged support equipment.
j. Terrain configuration and surrounding man-made environmental configuration.
k. Blast front parameters and direction of approach relative to the parked aircraft.

8.3.2 In-flight aircraft. Considerations which should be taken into account in the evaluation of blast survivability of in-flight aircraft are:

a. Blast effects upon foldable wings, tails, rotor, or fuselage.
b. Blast effects upon aircraft flying in close formation.
c. Blast effects upon avionics, service, or bomb bay doors.
d. Effect of blast reflections from terrain at lower altitudes.
e. Blast effects upon aircraft recovery systems.
f. Effects of blast upon mission completion.
g. Structural and g-loads on aircraft when blast effects are encountered.
h. The amplified blast effects due to thermal radiation closely preceding the blast effect and weakening aircraft subsystems prior to blast arrival.

8.3.3 Helicopters. Considerations which should be taken into account in the evaluation of helicopters are the same as those for parked and in-flight aircraft, with the following additions:

a. Clearances between rotor blade and fuselage required to prevent fuselage strikes.
b. The largest tolerable blade tip deflection on relative to the body .

Downloaded from http://www.everyspec.com

c. The largest allowable bending moment at one or more pre selected spanwise blade stations.
d. Rotor blade flapping response.
e. Aerodynamic blade stall.
f. Vertical CG displacement.

Defense Nuclear Agency (DNA) Report Numbers DNA 2910F-1, -2, and -3, respectively, contain analytical formulations, a computer program, and an example application for treatment of a helicopter in a nuclear blast environment.

8.3.4 Missiles and rockets. Considerations which should be taken into account in the evaluation of missiles and rockets are the same as those for parked and in-flight aircraft, with the following additions:

a. Gust effects on guidance accuracy.
b. Loss of aerodynamic stability.
c. Blast damage to target sensing equipment.
d. Blast damage to warhead activation equipment.

8.3.5 Analytical methodologies and considerations. Analytical methods which can be used to evaluate the effects of nuclear blast on aircraft MEWS are described in detail in DASA Handbook No. 2048 and in USAAMRDL-TR-74-48A. AFSC Design Handbook DH-2-7 is also another source of methodological definition.

8.3.5.1 General structure. The verification of aircraft hardness to nuclear blast by analytical procedures may be performed on a completed aircraft design or an existing production aircraft. In both cases, it may apply to the structures as a whole, to single structural members, or combinations of members of which the aircraft is comprised. The principal difference between a design for hardness and verification of hardness is one of viewpoint. Design for hardness answers the question: For a given level of blast pulse or thermal loading, how thick must a given geometry panel be to sustain the nuclear effects? Hardness verification answers questions such as: For a given panel thickness, geometry, and material, what level of threat can be sustained? The referenced analysis methodologies are applicable to both questions. After all loading combinations are determined, each structural member of the aircraft such as plates and shells must be checked from the point of view of elasticity, stability, thermoelasticity, and dynamics. The actual stress in the members must not exceed the allowable stresses (i.e., critical loads). For this purpose, all methods, formulas, and graphs as described in USAAMRDL-TR-74-48A are applicable; however, the modeling of actual response as a function of time presents greater requirements. The following references contain methodology and procedures for dynamic, structural analysis:

a. Structural Analysis of Shells; Backer, E.
b. Handbook for Analysis of Nuclear Weapons Effects on Aircraft; DASA 2098.

Downloaded from http://www.everyspec.com

c. Introduction to Matrix Method of Structural Analysis; Martin, H.S.
d. Theory of Matrix Structural Analysis; Pryemieniecki.
e. The Finite Element Method in Structural and Continuum Mechanics; Zienkiewicz.
f. Air Force Design Manual - Principle and Practices for Design of Hardened Structures, Air Force Special Weapons Center (AFSHC).

The formulation of equations of motion of a continuous system and their exact solution in terms of a denumerably infinite set of normal coordinates is a very complicated process. The processes involved in obtaining solutions to practical problems involve some degree of approximation. It is assumed that the space configuration of the deformed structure, which is an infinite-degrees-of-freedom system, can be approximated by an equivalent system with a finite number of degrees of freedom. Then, the behavior of the system may be defined by a finite set of simultaneous total differential equations in the independent variable, time. The following first two of three methods of approximation are based upon representation of the actual deformation shape as a superimposition of explicitly defined continuous functions or modes:

a. A first-level approximation may be made by taking a finite number of normal coordinates rather than an infinite number. Then, only a relatively small number of the lower natural modes of structure are actually needed to describe its deformation in most cases.

b. A second method is that of approximating the space configuration of a structure by a superposition of a finite number of assumed mode shapes. This method is referred to as the Rayleigh-Ritz method. In this method, each assumed deformation shape or mode represents a degree of freedom, and the multiplier that determines the amount of its contribution to any general deformation represents the generalized coordinate corresponding to that mode.

c. A third approach is a lumped parameter method in which the deformation of a continuous structure is approximated by a finite number of discrete generalized displacements of various parts of the structure. The lumped mass or rigid segment method, in which the structure is divided into a number of rigid segments with interconnecting weightless spring, is a prominent example.

All foregoing methods serve to reduce the problem from one involving partial differential or integral equations, with infinite degrees of freedom, to one involving a finite number of simultaneous total differential equations. The description of approximate analytical procedures is to be found in

Downloaded from http://www.everyspec.com

Aeroelasticity by Bisplinghoff. Simpler methods, applicable for verification analysis, are presented in AFSWC-TDR-62-138. However, the analysis of a complete structure as a unit also can be performed by several methods such as the finite element technique, using classical computer techniques. The entire structure is divided into as many finite elements as practical which are solved as one entity. This provides the analyst with a total picture of aircraft stresses and deformations. This method is described in detail in Introduction to Matrix Method of Structural Analysts by Martin, Theory of Matrix Structural Analysis by Pryemieniecki, and The Finite Element Method in Structural and Continuum Mechanics by Zienkiewicz. An advantageous method is a variation of the finite element method called analysis by substructures. This method can be expensive in terms of computer operating hours, but the calendar time of evaluation can be significantly reduced because different parts of the structure may be modeled and evaluated by different groups at the same time.

8.3.5.1.1 Synopsis of general analytical methodologies. A synopsis of existing general theoretical methods is presented below:

a. Membrane analysis.

Application	Advantages	Limitations
General method applicable where bending can be neglected. Used in combination with bending analysis of discontinuities.	Simplicity	Cannot be used alone when bending has to be considered. Cannot predict stresses and deformations due to concentrated loadings.

b. Linear bending analysis.

Application	Advantages	Limitations
Simple cases of shell revolution with multiple axisymmetrical or asymmetrical discontinuities. Useful in combination with membrane theory for analysis of discontinuities.	Useful for cases in which loading produces stress concentrations in proximity to loaded zone and in which deformations are small.	Can be used only for simple problems. Application to the torus, for example, is unacceptable.

Downloaded from http://www.everyspec.com

c. Force method.

Application	Advantages	Limitations
Common practical method for determination of discontinuity stresses in branched shells and multishells.	Simple to apply with slide rule or calculator.	Limited to shells of revolution with linear characteristics only. Prerequisite existence of tabulated influence coefficients for deformaions at junction due to unit edge loadings.

d. Displacement method.

Application	Advantages	Limitations
Applicable to pressure vessels which are multishells of revolution.	Simple to apply with a slide rule or calculator for small-order uncoupled systems.	Limited to shells of revolution with linear characteristics and with axisymmetrical loading. Stiffness influence coefficients are not readily available for some shells of revolution.

e. Iterative method.

Application	Advantages	Limitations
Applicable to rotationally symmetrical multi shells.	Only slide rule or calculator is needed for performing calcula tions. Evaluation is straightforward and systematic.	Limited to shells of revolution with axisymmetrical loading. Linear characteristics required.

f. Finiteelement method.

Application	Advantages	Limitations
Very general application for shells and multishells. Arbitrary loading and geometry. Arbitrary material properties. Both linear and nonlinear capabilities. Ideal	Numerous computer programs in existence make utilization of this method practical for complex multishells. Generality of method permits application to wide variety of complex	Computer program with adequate library of elements must exist or be developed. Each program has own limitations. Practical for complex multishells; for simple pressure vessels, use of

Downloaded from http://www.everyspec.com

for various intersections of shells. Applicable also for cutouts.	discontinuity problems.	the programs may be more costly than use of closed-form solutions.

g. Finite-difference method.

Application	Advantages	Limitations
Variously shaped symmetrical and nonsymmetrical shells and multishells with symmetrical and non symmetrical loadings. Linear and nonlinear characteristics of geometry and materials. Applicable also for intersection of shells cutouts.	This method is developed more for nonline evaluation than finite element method. Usually requires less computer time. Numerous computer programs are in existence (but not as many as for finite-element method).	Finite difference method is currently applied only to simple types of discontinuities. Not generally applicable to highly redundant complex discontinuuities such as Irregularly shaped, reinforced cutouts. Generally must utilize computer program for solution. or

h. Numerical integration method.

Application	Advantages	Limitations
Evaluation of shells of revolution subjected symmetrical and nonsymmetrical loads.	For some applications, programming simpler and more efficient than for other methods. There is good control of numerical accuracy since segmenting allows variable integration lengths.	Since boundary effects are highly localized, it is to difficult to apply this method at discontinuities. This method can be applied only to problems which can be reduced to a one dimensional mathematical form.

i. Orthotropic analysis.

Application	Advantages	Limitations
Applicable to shells with stiffness properties which vary in the meridional and circumferential directions such as pressure vessels with closely spaced stiffness or waffles.	Required to determine accurately discontinuity stresses in orthotropic pressure vessels.	Not all available computer programs have this capability.

Downloaded from http://www.everyspec.com

j. Plastic analysis.

Application	Advantage	Limitations
Developed only for special cases of cylinders and spheres. Problems of bursting for cylinders with hemispherical caps. Problem of material hardening. Cylinders with rigid ends.	Solves elastic/plastic problems not amenable to other methods.	Evaluation is long and requires computer programs. Developed for limited problems only.

8.3.5.2 Preliminary structural response analysis. If nuclear hardness is to be obtained with minimal weight increments, nuclear response evaluation should begin early in the preliminary design of an aircraft. This permits development of a balanced design which considers manuever, gust, taxi, and landing loads in conjunction with nuclear overpressure and thermal loadings. In fulfilling the basic structural integrity criterion, a wide range of technical disciplines must be considered. Discipline-related factors strongly impacting survivability evaluation include:

a. When evaluating structural performance above the proportional limit, the nonlinear characteristics of the material stress-strain are evaluated for stress and strain predictions.
b. The shape and duration of the overpressure, gust, and thermal pulses are evaluated with respect to the response characteristics of the structure to insure full consideration of magnification or alleviation of nominal pulse loadings.
c. The effect of heating on material strength and stiffness at the time of exposure and after the short-duration loading is evaluated.
d. Where structural deflections are large (exceeding the material thickness), the redistribution of load paths is evaluated.
e. The impact of permanent, large structural deformations upon aerodynamic performance is limited to levels which will permit completion of the mission.
f. Where significant, the strengthening or weakening aspects of post-buckling behavior are considered.

8.3.5.3 Blast loading analysis considerations. To be accurate, a measure of aircraft structural strength under blast loadings should consider:

Downloaded from http://www.everyspec.com

a. The large multiplication factors that must be applied to the nominal blast pressure loading level.
b. The very short duration of pressure load application.

The multiplication factors are:

a. Reflection factor, which depends on surface shape of structural element.
b. Dynamic load factor, which is a function of the natural frequency of the structural element and the time variation of applied loading.
c. Magnification factor, which is the product of multiplication factors a. and b.

The overpressure is increased significantly by these factors. For example, the nominal effect of a suddenly applied load is to double the response attributable to a static loading. The blast loading is usually of a very short duration, and the structure does not develop the large deflections which correspond to static loading of a given level. This decreases the effective stress levels. Even so, because of the multiplication factors, the deformation may be very large, approaching or exceeding the static values. Mathematically, the short-duration loading can be replaced by an equivalent static loading and evaluation performed with known statics and strength of materials methods. The analysis should consider both the elastic and the plastic range of the materials.

8.3.5.4 Thermal influences. Since the nuclear detonation produces a thermal pulse which can induce very high temperatures, thermal stresses must be considered. This may be accomplished through thermal analysis procedures identified in 8.4, A careful evaluation of the degradation of material properties under the application of high temperatures is also necessary. All metals soften with an increase in temperature, thus changing the material characteristics. Consequently, it is of importance to study materials as they behave at high temperatures and short-duration loadings. Thin skins are rapidly heated to temperatures which result in thermal stresses and possibly reduction in material allowable. Aircraft vulnerability to thermal effects can be reduced by coating with paints, eliminating ignitable materials from exposed surfaces, and thickening skin. For a thin skin, there is essentially no temperature variation through the thickness. For thick skins, the temperature distribution across the thickness of the skin must be considered in determining thermal stresses. More complex temperature distributions occur in built-up structures, with air gaps acting as insulators between spars, stringers, and skin. For all but the simplest configurations, computer programs are necessary to define these temperature distributions. The increased temperature has a double effect on a structural member:

a. It reduces the rigidity of material by softening it, which actually causes degradation of the material. Con sequently, the structural member must be evaluated for

Downloaded from http://www.everyspec.com

effective loading, as previously described, at the lowered modulus of elasticity which corresponds to the higher temperature.

b. Unless the structural member is statically determined, the elevation in temperature produces additional thermal stresses. Thermal effects must be calculated at the time of peak temperature and after a period of exposure to the elevated temperature.

8.3.5.4.1 Combined effects The equivalent static loads due to nuclear blast (overpressure and gust) loads must be combined with the thermal stresses, and material response calculated with the material properties that correspond to the elevated temperature.

8.3.6 Computer codes and methodologies available. Computer codes available for use in blast evaluation of aircraft structures are identified. This list is not comprehensive because of the number, the variety, and the updating or replacement of codes available. The codes listed, however, are representative and are of a general blast and structural evaluation nature. Prior to using any of these codes, their applications, limitations, approximations, and inaccuracies should be understood. Additionally, it should be ascertained that the codes are the latest, updated versions or have not been replaced by newer codes.

a. NASA Structural Analysis (NASTRAN) computer code - general availability.
Developed for NASA/FSFC/LRC by Computer Services Corpora tion.
Characteristics: Finite element, three-dimensional, linear, nonlinear considered as piecewise linear, thermal effects, static, dynamic, direct and modal transient response, direct and modal frequency response, real and complex eigenvalues, buckling. Very general. Every kind of aircraft structure and every type of construction.

b. Nuclear Overpressure Vulnerability Analysis (NOVA) computer code - general availability.
Developed for AFWL by Kaman AviDyne.
Characteristics: Nonlinear, dynamic nuclear - applies to aircraft, missiles, rockets.

c. Helicopter Program (HELP) computer code - general avail ability.
Developed for DNA by Kaman AviDyne.
Characteristics: Helicopter response to nuclear gust. Covers teetering, articulated, and rigid rotors.

8.3.7 Testing techniques. Test procedures should be used to demonstrate structural hardness and to verify the logic and validity of the design and evaluation procedures, to disclose possible fabrication

Downloaded from http://www.everyspec.com

errors, and to uncover unexpected stress concentrations and flaws. The simulation of the correct intensity and time of arrival of the thermal pulse should be included in the approaches to the prediction, given the initial peak overpressure and the duration and shape of the positive and negative phases of the blast wave and of the time character of dynamic loading on a structure. The prediction approaches include:

a. Laboratory shock-tube simulation.
b. Use of high-explosive charges to develop blast waves.

8.3.7.1 Shock-tube simulation. The shock-tube is well suited to studies of blast response. It provides a laboratory controlled method for obtaining shock waves of desired peak pressures in a relatively Inexpensive manner. These shock waves may be imposed on structural models of arbitrary shapes with limited dimensions. Accurate pressure time measurements can be made on each face of the model. Disadvantages of the shock-tube for simulating blast waves are:

a. Limited control of the shape of the pressure pulse following initial peak (especially for higher peak pressures).
b. Limited time span for observation due to reflections from sides of shock-tube.
c. Limited range of pressures.

For the purpose of studying the force-time characteristics of the loading on the various faces of a structural element or structure, nondeformable models of proper size may be inserted in the test section of the shock front tube. Pressure measurements may be made using very small pressure gages made of quartz crystals, barium titanate, or other types of transducers, or by the use of the optical interferometer, which determines the density of the air and thus may be used to determine pressure distribution.

8.3.7.2 High-explosive charges. The use of high-explosive charges to develop blast waves has the following disadvantages:

a. A large, secluded area is required.
b. It is difficult to produce the thermal pulse at the intensity and at the time required to simulate the nuclear environment.

8.4 Thermal. The basic considerations which should be addressed when evaluating or verifying thermal effects upon aircraft and identifying techniques and relevant sources of evaluation information are provided in 8.4.1 through 8.4.6.

Downloaded from http://www.everyspec.com

8.4.1 Parked aircraft. Considerations which should be taken into account in the evaluation of thermal survivability of parked aircraft are:

a. Thermal energy entering voids left by folded wings, tanks, rotors, or fuselages and damaging internal wiring, tubing, or other subsystem components.
b. Thermal damage to wing, tail, fuselage, Or blade fold subsystems which would disallow movement of these structures into a flight-ready condition.
c. Thermal energy causing fires by igniting nearby aircraft refueling equipments and facilities.
d. Thermal effects on aircraft with avionics, service, or bomb bay doors open.
e. Effects of thermal energy entering windows or canopies.
f. Thermal effects on aircraft tires resulting In failure and inability to take off, resulting in failure during takeoff or landing, or disallowing or making movement on the carrier deck more difficult.
g. Thermal effects on aircraft using fabrics in their construction.
h. Loss of structural integrity due to thermal effects on composites.
i. Thermal damage to aircraft support equipment.
j. The blast phenomena will closely follow the thermal energy pulses.

8.4.2 In-flight aircraft. Considerations which should be taken into account in the evaluation of thermal survivability of in-flight aircraft are:

a. Aircraft temperature increase over the initial temperatures.
b. Effects of thermal irradiation upon mission completion.
c. Structural and g-loads on aircraft when the thermal energy is encountered.
d. Effects of thermal radiation upon aircraft using fabrics in their construction.
e. Effects of thermal radiation on aircraft using composites in their construction.
f. Loss of structural integrity due to thermal Irradiation.
g. Effects of thermal energy entering windows or canopies.
h. The production of noxious fumes in crew areas.
i. Protection of aircrews.
j. The thermal radiation will be closely followed by the blast phenomena.

Downloaded from http://www.everyspec.com

8.4.3 Helicopters. Considerations which should be taken into account in the evaluation of helicopters are the same as those for parked and in-flight aircraft, with the following additions:

a. Thermal effects on composite rotor blades.
b. Thermal effects on exposed blade control components located near the rotor hub.

8.4.4 Missiles and rockets. Considerations which should be taken into account in the evaluation of missiles and rockets are the same as those for parked and in-flight aircraft, with the following additions:

a. Initial missile or rocket surface temperatures may be higher,
b. Thermal effects on missile guidance subsystems and accuracy.
c. Thermal effects which might degrade missile target sensing capability.
d. Thermal effects which might disallow warhead activation or functioning.

8.4.5 Analytical methodologies and considerations. Analytical methods which can be used to evaluate thermal effects on aircraft MEWS are described in detail in USAAMRDL-TR-74-48A. Additional analytical technique definition is available from other documents referenced in 8.4.5.10.

8.4.5.2 Initial temperatures. For many aircraft, the initial temperature of most components may be approximated by ambient air temperature. This approximation is valid when flight speeds are low enough to prevent appreciable aerodynamic heating, and when flight altitudes are low enough that the high aerodynamic heat transfer coefficient forces skin temperature to approach air temperature. The air temperature approximation is not valid for high-speed aircraft or for components which encounter:

a. Locally high speeds, such as on rotor blades.
b. Heating from the interior, such as engine compartment skins.
c. Cooling from the interior, such as on integral fuel tanks.
d. Discharge of hot gases such as engine exhaust.
e. Other such special local environments.

Downloaded from http://www.everyspec.com

For these cases, initial temperatures can be calculated by solving the heat balance equation which states that the algebraic sum of the following fluxes must equal zero:

a. Aerodynamic heat flux.
b. Solar heat flux.
c. Radiant heat flux exchanged with ambient.
d. Heat flux from interim.

8.4.5.2.1 Aerodynamic heating. Aerodynamic heat flux is computed by taking the product of the aerodynamic heat transfer coefficient and the difference between the adiabatic wall temperature and the initial or skin temperature. The adiabatic wall temperature is the temperature the skin would reach if there were no heating or cooling effects other than the aerodynamic effect.

8.4.5.2.2 Solar flux. Solar flux varies with time of day, cloud cover, and solar activity, as well as altitude. Standard values for use in aircraft design exist only at sea level. For high altitude, a value frequently used is 435 Btu/ft^2-hr (1371.33 W/m2). The absorptance of the skin depends upon the optical properties of the skin. Solar absorptances are, in general, close to the nuclear absorptance values.

8.4.5.2.3 Radiant heat exchange. The skin of the aircraft exchanges heat with its surroundings by radiation, according to the Stefan-Boltzmann Law. The heat flux into the skin is proportional to the product of the skin emittance and the difference of the ambient temperature to the fourth power and the initial or skin temperature to the fourth power.

8.4.5.2.4 Heating from the interior. The temperature at a particular spot on an aircraft skin is influenced by adjacent sources or sinks of heat within the aircraft, such as engines, fuel tanks, and electronic bays. The heat transfer from these sources and sinks depends upon the particular configuration and circumstances which must be evaluated individually. In a highly generalized form, the heat flux from the interior can be expressed as the product of the heat transfer between the skin and the interior of the aircraft and difference between the interior and skin temperatures.

8.4.5.3 Initial temperature variation. The initial temperature of each structural element should be considered separately because of localized variations in aerodynamic heating, radiant heating, and heating from the interior. Additionally, since an aircraft is a three-dimensional object, the maximum solar flux cannot be received by all surfaces simultaneously. Therefore, the magnitude of solar flux will vary over the aircraft surface.

Downloaded from http://www.everyspec.com

8.4.5.4 Fireball flux variation. The flux as a function of time varies with relative motion between aircraft and fireball. The power is distributed over a surface of $4\pi r^2$, where r is the distance between the aircraft and the fireball. This distance will vary as the fireball rises and the aircraft proceeds on its course. As the distance increases, the transmittance of the atmosphere decreases. Thus, the flux becomes a function of two parameters that vary with time:

a. The radiant power from the fireball.
b. The distance between the aircraft and the fireball.

8.4.5.5 Fibrous composites. In fibrous composites, the fibers are usually arranged in layers. Each such layer or ply should be treated as a lamina or node in a heat transfer analysis.

8.4.5.5.1 Effect of flanges. Composite materials run the gamut from simple to highly complex. A skin and underlying supporting member, such as occurs at the outer flanges of frames, longerons, or stringers, may be regarded as a simple composite. When such flanges are in intimate contact with the skin, they provide additional thermal capacity in which to store the incoming heat. Usually, the thermal resistance across such structural joints is small and can be ignored. With the same material in skin and flanges, the composite can be treated as a single solid member having a thickness equal to the sum of the thicknesses of its components. With different metals of thin section, the joint is treated as a skin with a heat capacity equal to that of the skin plus that of the flange. Only one-dimensional heat transfer has been considered; one-dimensional analyses are valid for most situations, because thermal conditions usually do not change rapidly across the skin. Also, the conductive distances, and hence the resistances, are much greater along the skin than through it. The one-dimensional treatment is valid for the bulk of the area where skin covers flange, but may not be applicable to certain precise locations within this area. For instance, the temperature at the edge of a flange will be between that based on the thickness of the skin and that based upon the combined thickness of both skin and flange, but will be closer to the latter temperature.

8.4.5.6 Skin and juncture structure. Junctures of skin and structure composed of different materials must not be treated with uniformity or constant thermal resistance over their thicknesses. Each different material should be treated as a layer with its appropriate heat transfer properties. In such cases, consideration must be given to the abrupt changes in the thermal properties at the interface of the materials.

8.4.5.7 Sandwich materials. Thermal computations for sandwich materials can be made in a continuous material manner if there are no voids in the sandwich or if the voids are small and numerous. For a foam, the voids must be small enough to permit use of the average thermal properties within the thicknesses of the materials. One-dimensional techniques may then be used for evaluation.

Downloaded from http://www.everyspec.com

8.4.5.8 Semitransparent materials. When radiation from a nuclear weapon is incident on semitransparent material, some of the radiation is reflected from the outer surface, some is absorbed at the surface material, and the remainder is transmitted through the surface. Some of the transmitted energy is absorbed within the material; the remainder is incident on the rear surface of the panel, where a portion is absorbed, a portion is transmitted, and the remainder is reflected back into the material. A reflective surface behind the panel can send some of the transmitted energy back into the material . Some of this reflected energy is absorbed in the material; the remainder is Incident on the front surface, where a portion is absorbed, a portion is reflected back into the material, and the remainder is transmitted outward from the aircraft. Calculation of temperature rise within semitransparent material is, thus, more complicated than the calculations required for opaque material.

8.4.5.8.1 Optical properties. Optical properties of interest include absorptance, reflectance, transmittance, and an extinction coefficient. Each of these properties varies with the wavelength of the radiation. The absorptance is usually calculated from measured values of reflectance and transmittance.

8.4.5.8.2 Reflections from within aircraft. Some of the energy transmitted through the last lamina and into the aircraft interior may be reflected back into the material. For example, the crew may be protected from a nuclear flash by means of a reflective shield interposed between the canopy and the crew. Such an interior reflective surface will cause energy to enter the rear lamina and to proceed, governed by Beer’s Law, through each succeeding lamina and cause an overall temperature rise.

8.4.5.9 Composite semitransparent panels. Composite semitransparent panels can be treated the same as single panels using the appropriate analytical methodology, with the following exceptions:

a. Optical properties must be defined for each material and the reflectance at interfaces between different materials must be known. When the spectral indexes of refraction for each material are known, the reflectance of each Interface can be computed by Fresnel’s formula. Where the indexes of refraction of the materials are not known, laboratory measurements of the properties of the individual materials and the composite may be required. However, most canopy materials have similar Indexes of refraction, and internal reflections may frequently be ignored.

b. Electroconductive coatings are frequently deposited at interfaces for purposes of anti-icing and radar reflectivity. These coatings are usually metals (e.g., tin and gold) and

Downloaded from http://www.everyspec.com

their oxides. These coatings can cause appreciable reflec tances and absorptances at internal interfaces. Since the coatings are very thin, it is suggested that their mass be neglected to prevent too small a time constant in the calculations, and that half the energy absorbed in the coating be given to each adjacent lamina.

8.4.5.10 Computer codes and methodologies available. Methodologies available for use in thermal analysis of aircraft are:

a. Thermal Response Analysis Program (TRAP). A digital computer program for calculating the response of aircraft to the thermal radiation from a nuclear explosion, AFWL.
b. A Thermal Source Model from Sputter Calculations, AFWL.
c. Spectral Characteristics of Thermal Radiation from a Nuclear Explosion, AFWL.
d. Fundamentals of Aerodynamic Heating, Truitt.
e. An Engineering Study of Air Conditioning Load Requirements for Aircraft Compartments, Wright Air Development Center.
f. Thermo-Structural Analysis Manual, Wright-Patterson Air Force Base.

This list is not comprehensive because of the number, the variety, and the updating or replacement of codes available; those listed, however, are considered representative. Prior to using any of these methodologies or codes, their application, limitations, approximations, and inaccuracies should be understood. Additionally, it should be ascertained that the codes are the latest, updated versions or have not been replaced by newer codes.

8.4.6 Testing techniques. A very important part of thermal verification is testing. In a typical thermodynamic laboratory, a thermal nuclear simulator is used for testing of structural elements. A typical nuclear simulator consists of a terminal resisting heating system and a test rig incorporating a pair of fast-acting doors actuated by an electropneumatic circuit to produce the required flash simulating the thermal radiation caused by a nuclear weapon detonation. Three parameters are monitored during tests:

a. Elevated temperatures of structural elements measured by thermocouples.
b. Thermal strain and buckling stress at selected locations as measured by strain gages.
c. Heat flux rate measuring the thermal environment to which the specimen is exposed.

Still photographs of conditions before and after test of specimens should be recorded. Structures should be subjected to the specified thermal pulse loading and the specified overpressure pulse loading. The prescribed number of repetitions of these blast loadings provides structural response

Downloaded from http://www.everyspec.com

characteristics data under the nuclear pulse loading. Stress and stiffness values are determined from the structural test data. In cases where theoretical evaluation is of questionable accuracy (e.g., for very complex discontinuities, such as cutouts, reinforcements, and fittings), experimental stress evaluations should be performed to substantiate theoretical evaluations and to determine detailed stresses when theoretical evaluations are not available. An experimental evaluation should be conducted during preliminary design in order to evaluate design feasibility and the resulting discontinue ties before building hardware. Discontinuities of stresses in complex structures due to irregularities are often detectable only by experimental methods.

8.5 Radiation. Basic guidelines for evaluating or verifying radiation effects upon aircraft and identifying relevant sources of evaluation information are provided in 8.5.1 and 8.5.2.

8.5.1 Transient radiation effects on electronics. The word transient in the acronym, TREE, refers to the nuclear radiation environment (radiation pulses lasting from nanoseconds to a few milliseconds) and not to the duration of the effect which may be either transient or permanent.

8.5.1.1 TREE evaluation. TREE evaluation consists of:

a. Gamma dose rate evaluation.
b. Neutron evaluation.
c. Total dose effects.

The evaluations should be statistical in nature because of the intrinsic stochastic nature of the events and device properties involved and should produce results in the form of plots of failure probability versus nuclear environment from component radiation failure test data. The verification of hardness of an electrical or electronic system can be accomplished by analytical evaluations supported by tests of critical circuits or by complete equipment box test.

8.5.1.2 Analytical methodologies and considerations. Either a hand or a computer- aided circuit evaluation should be performed for critical circuits identified in the list of mission-essential equipment. For complex circuits, computer- aided evaluation is recommended over hand evaluation. Limitations in the number of modes and elements in computer codes limit the circuit size which may be evaluated. Additionally, distinctions between codes must be ascertained prior to planned use. For example, some codes require radiation photocurrent values to be input, whereas other codes employ a build in current source capability; some codes are time varying in nature while others are not; some codes have plotting capability while others do not; and some codes require large amounts of computer memory while others do not. Computer-aided evaluation is accomplished by integrating all necessary models

Downloaded from http://www.everyspec.com

and components into a circuit in accordance with the rules and requirements of the computer that is being used. A complete circuit evaluation should include the following items:

a. Complete drawings of the circuit to be evaluated indi cating node numbers, device types, and component values.
b. The coded circuit topology and circuit models for the specific computer program.
c. All computer output data and plots that show relevant effects.
d. An evaluation of the results.

8.5.1.2.1 Gamma dose rate evaluation. Methodology which can be used in conducting gamma dose rate analysis can be found in USAAMRDL-TR-74-48A and AFSC Design Handbook DH 2-7. Computer codes, useful in the computation of gamma dose rate, include:

a. System of Circuit Analysis Program (SYSCAP) - Transient Circuit Analysis Program (TRACAP), Rockwell/Autonetics.
b. SYSCAP - Direct Current Circuit Analysis Program (DICAP), Rockwell/Autonetics.
c. System for Circuit Evaluation and Prediction of Transient Radiation Effect (SCEPTRE) - A computer program for Circuit and System Analysis, Bowers.
d. Transient Circuit Analysis (TRAC), Harry Diamond Laboratory.
e. TESS - Nonlinear Circuit and System Analysis Program, TRW Systems Group.

8.5.1.2.2 Neutron evaluation. The methodology and computer codes in 8.5.1.2.1 for gamma dose rate evaluation are applicable to neutron evaluation. Definition of circuit vulnerability to neutron effects and establishment of hardness assurance requirements both rely heavily on a statistical evaluation of transistor beta degradation This evaluation consists of determining the expectation of failure for transistors exposed to neutron radiation from test data. Transistors exhibit a characteristic initial gain which is functionally dependent on the base current and varies between limits generally specified by the manufacturer. At nuclear radiation levels consistent with aircraft hardening specifications, neutron effects are the primary nuclear radiation effects of concern for hardness assurance.

8.5.1.2.3 Total dose evaluation. Component test data are required to substantiate circuit hardness to total dose environments for critical circuits. Not all components are susceptible to the total ionizing dose environment It affects devices in which the nuclear radiation ionizes gas molecules and foreign particles near the surface of an electronic device and the resulting accumulation of charge causes permanent damage.

Downloaded from http://www.everyspec.com

Specific examples are chemical effects, long- term carrier trapping, and space charge effects in insulators. Components susceptible to such effects should be evaluated regarding total ionizing dose.

8.5.1.3 Testing facilities and techniques. The simulation of radiation environments for aircraft radiation levels can be accomplished at any number of facilities located throughout the United States. A general description of most of these facilities can be obtained from the TREE simulation facilities document. The detailed capabilities of a specific facility can be obtained from the facility of interest. A description of the types of facilities used to simulate various environments, along with methods of reducing unforeseen test problems. include:

a. Pulsed reactors. These reactors are used to simulate the effects of neutrons on electronic devices and components. Reactors can be operated either in the pulsed or the steady- state mode. In either mode, neutron and gamma radiation are produced. The neutron/gamma ratio should be high enough to allow separation of environments and can be increased by adding shielding to attenuate the gammas. A neutron test is normally conducted in discrete steps of increasing fluence levels until device failure. After each neutron exposure and prior to measuring device characteristics, a mandatory cool down period is required so that personnel are not exposed to dangerous radiation levels. Since all metals and most materials used external to a device for mounting also become activated, testing time can be significantly reduced by keeping non- device-related materials to a minimum.

b. Flash X-ray machines. X-rays are used to simulate the effects of prompt gamma rate effects on electronic devices and components. The selection of a flash X-ray machine to simulate a given prompt gamma environment is critical. The pulse width of a given machine is essentially fixed, and only limited variations of dose rate are available. As the requirement for amount of exposed area Increases, larger machines have to be used, and reproducibility from pulse-to-pulse decreases. By taking devices and circuit geometries into consideration, the smaller machines can be used, thus reducing testing cost. Such considerations involve mounting critical test components so that they can be directly exposed to the X-ray beam, shielding all nontested components from the beam, and keeping external circuit components to a minimum.

c. Linear accelerators. The electron linear accelerator (LINAC) is used to simulate the effects of gamma rate

Downloaded from http://www.everyspec.com

effects on electronic devices and components. Its main advantage over the flash X-ray machines is that pulse widths and dose rates may be independently varied over a wide range of values at a single facility.

d. Steady-state gamma sources. These sources are used to simulate total dose radiation. The gammas are obtained from isotope sources such as CO_{60}, and source geometries can take many forms depending on the facility. All forms require device positioning dependent on the specific source geometry for correct dose levels. Testing can be accomplished in either static or dynamic modes, depending on system requirements. Dynamic mode testing requires lead shielding of nontested components and equipment that are in the source chamber.

8.5.1.4 Dosimetry. Dosimetry is the measurement and provision of a quantitative description of a radiation dose, in terms relevant to the radiation effect being studied. The types of dosimetry are many and varied, Some of the types used by radiation facilities are described in the TREE simulation facilities document. In general, dosimetry accuracy varies from facility to facility, with typical accuracies ranging from 10 to 20 percent. General precautions that should be considered in test setups follow:

a. Flash X-ray dosimetry. Passive dosimetry, thermolumines cent dosimetry (TLD), is typically used. To measure this radiation intensity, the thermoluminescent dosimeters are mounted as close to the test device as possible without shielding the X-rays from them. In large X-ray machines, used primarily for testing equipment boxes as opposed to discrete devices, the thermoluminescent dosimeters should be placed on the front, back, and sides of the test box so that results can be averaged over the exposed area.

b. Steady-state gamma source dosimetry. The same types of dosimetry as previously mentioned are used. The mounting precautions are similar, and the thermoluminescent dosimeters should be placed on all external equipment in the chamber during dynamic testing. Because of the high dose levels normally associated with total dose testing, the useful range of the dosimeter is frequently exceeded. Care must be taken to change the dosimetry in these types of tests.

c. Neutron dosimetry. Sulfur tablets are typically used to measure the neutrons, and thermoluminescent dosimeters are used to measure the gammas so that the neutron/gamma ratio can be determined. Reactor personnel usually handle the placement of dosimeters because of the high activation levels present.

Downloaded from http://www.everyspec.com

8.5.2 Aircrew. Aircrew incapacitation resulting from exposure to intense penetrating nuclear radiation represents a significant hazard for aircraft required to operate in the vicinity of nuclear weapon detonations. Crew/pilot vulnerability to nuclear radiation is a primary factor in the conduct of nuclear vulnerability evaluations and the subsequent definition of balanced hardening criteria. Past studies have indicated that, for most aircraft burst orientations, the amount of natural (inherent) shielding afforded crew members and sensitive components by the aircraft structure and surrounding equipment to nuclear radiation is insignificant. The addition of shielding is generally not practical because of the weight penalties incurred. The biologically significant interaction of high-energy neutrons and gamma rays with matter involves the ionization of the atoms and molecules which comprise the matter. When the molecules which comprise a living cell are ionized:

a. The cell may burst or its normal functioning may be altered.
b. The products formed by ionization may act as poisons to the normal biochemical processes of the organism.
c. Alteration of cell membrane chemistry may cause the victim's immune system to attack his own tissue.

8.5.2.1 Tissue sensitivity. There are three classifications of cell and tissue sensitivity to ionizing radiation:

a. Radiosensitive. The cells and tissues most sensitive to ionizing radiation are characterized by rapid self-repopulation and are termed radiosensitive. Examples of radiosensitive tissue are the lymphoid tissue, active in the suppression of infections and the hemopoietic or blood-forming tissue.

b. Radioresistant. Slowly repopulating tissues and tissues which cannot repopulate their functional cells are rela tively radioresistant. An example of radioresistant body tissue is nervous tissue.

c. Moderately radiosensitive. Between the two foregoing classifications, examples Include the mucosa of the gastrointestinal tract and the fine circulatory vascula ture which serves as an interface between blood and body tissue.

8.5.2.2 Dose quantification. The most commonly used measure of radiation dose is the absorbed dose. The unit of absorbed dose, the rad (radiation absorbed dose), refers to a specific amount of energy imparted to a unit mass of the irradiated material. When the absorbing material is living tissue, the unit is termed rad (tissue) and is equal to the absorption of 100 ergs in a gram of tissue. Rad (tissue) and rad (free-in-air) are approximately

Downloaded from http://www.everyspec.com

equal . For the same exposure dose, the value of the absorbed dose will vary depending on the location in the body volume where the dose measurement is taken In radiation response research, a standard location for dose measurement is the center of the head. The measure is called the mid-head-dose (MHD) and is equal to about one- half of the tissue or free-in-air dose due to shielding by body tissues.

8.5.2.3 Response to nuclear radiation. Human response to radiation may be divided into three phases: initial, latent, and final. Only the initial phase is considered relevant to pilot nuclear radiation vulnerability criteria. The responses observed in the initial phase are commonly classified according to the organ system which is responsible for the predominant signs and symptoms. The principal organ systems contributing to the initial response are the hemopoietic system, the gastrointestinal system, and the central nervous system. Although all three systems suffer injury from an irradiation, differences in the radiosensitivity of the tissues of each system cause different responses depending on the dose level. Predominant responses for doses ranging from 200 to 20,000 rad (2 to 200 J/kg) (tissue) are summarized as follows:

a. Symptoms associated with hemopoietic injury and/or gastro intestinal injury are predominant at doses from 200 to 800 rad (2 to 8 J/kg) (tissue). These symptoms include nausea, vomiting, and fatigability. In individuals more sensitive to radiation effects, doses in this range may also lead to diarrhea, fever, and hypotension (low blood pressure) indicating more severe injury to the gastro-intestinal and vascular systems. The onset of symptoms (nausea, vomiting, and fatigability) occurs in most individuals within approximately 1 hour following doses equal to or greater than 300 rad (3 J/kg).

b. For doses between 800 and 3000 rad (8 to 30 J/kg), the onset of the initial response phase is earlier and is predominated by symptoms associated with damage to the gastrointestinal system. Diarrhea, fever, and hypotension occur, in addition to more severe experiences of nausea, vomiting, and fatigability.

c. Symptoms of damage to the central nervous system predominate from 3000 to 20,000 rad (30 to 200 J/kg). Beginning several minutes after exposure, one or more periods of early transitory incapacitation (ETI) may occur and may last from several minutes to a few hours depending again on individual sensitivity.

8.5.2.4 Pilot nonperformance vulnerability criteria. Since the task of effectively piloting a military aircraft requires essentially continuous performance, a variable relevant to pilot vulnerability is the maximum

Downloaded from http://www.everyspec.com

duration of weapon-induced pilot nonperformance or incapacitation consistent with the pilot sure-safe and sure-kill criteria. Sure-safe and sure-kill pilot nonperformance vulnerability criteria are defined as follows:

a. A pilot sure-safe criterion refers to an absorbed radiation dose which would lead to a 1% incidence of aircraft crash due to pilot failure beginning within the first hour after exposure.

b. A pilot sure-kill criterion refers to an absorbed radiation dose which would lead to a 99% incidence of aircraft crash due to pilot failure beginning within the first 5 minutes after exposure.

For sure-safe criteria:

a. The aircraft is assumed to be in its most vulnerable posture and without automatic pilot.

b. If the absorbed radiation dose were such that 1% or less of all pilots would experience a period of nonperformance of the duration specified or greater within the first hour after exposure, then an aircraft loss of 1% or less would be experienced and the absorbed dose could be said to be in the sure-safe region.

For sure-kill criteria:

a. The aircraft is assumed to be in its least vulnerable mode of operation, in a straight and level flight, trimmed, and with its stability augmentation system or automatic pilot on if the aircraft is equipped with such a device.

b. If the absorbed dose were such that 99% or more of all pilots would experience a period of nonperformance of the duration specified or greater within the first 5 minutes after exposure, then an aircraft loss of 99% or greater would be expected and the absorbed dose could be said to be in the sure-kill region.

The results of nonperformance experiments on monkeys, applicable to pilot vulnerability, are presented in Personnel Risk and Casualty Criteria for Nuclear Weapons Effects by the Army Combat Development Command; a synopsis of these data is contained in USAAMRDL-TR-74-48A. Of equal importance, as the duration of nonperformance (incapacitation), is the relationship between the time to incapacitation and dose; applicable data can be found in Personnel Risk and Casualty Criteria for Nuclear Weapons Effects by the Army Combat Development Command.

Downloaded from http://www.everyspec.com

8.5.2.5 Methodology and data. Additional information on and methodology relating to aircrew incapacitation can be obtained from the following documents:

a. The Effect of Nuclear Radiation on the Combat Effective ness of an Aircraft Crew Member, The Boeing Company.
b. Preliminary Neutron and Gamma Ray Shielding Analysis - B-1 Crew/Equipment, Rockwell International.
c. Personnel Risk and Casualty Criteria for Nuclear Weapons Effects, Army Combat Development Command.

8.6 Electromagnetic pulse. Basic guidelines for evaluating or verifying EMP effects upon aircraft and identifying relevant sources of evaluation information are provided in 8.6.1 through 8.6.4.

8.6.1 Parked aircraft. Considerations which should be taken into account in the evaluation of EMP survivability of parked aircraft are:

a. Electrical coupling of aircraft due to their being parked in proximity on a carrier deck.
b. Localized EM fields and currents which are functions of carrier deck and superstructure conductivity and reflectivity.
c. EMP energy entering parked aircraft through openings made available by folding wings, tanks, or fuselages.
d. EMP energy entering parked aircraft through tie-down chains.
e. EMP energy entering aircraft through attached handling equipment tow bars.
f. EMP energy entering aircraft through open avionics, service, or bomb bay doors.
g. EMP energy entering aircraft through canopies and windows.
h. EMP energy impinging upon aircraft parked on the hangar deck through carrier elevator or storm door openings or penetration through the carrier deck.
i. EMP-induced damage to wing, tail, fuselage, or blade fold subsystems which would disallow movement of these structures into a flight-ready condition.

8.6.2 In-flight aircraft. Considerations which should be taken into account in the evaluation of EMP survivability of in-flight aircraft are:

a. EMP energy being coupled into aircraft (aircraft acting as an antenna).
b. EMP energy entering through cracks, holes, voids, or external cables, wiring or antennas.
c. Effects of interfering signals on aircraft electronics.
d. Resulting effects upon aircraft safety of flight.
e. Resulting effects upon aircraft mission completion capability.

Downloaded from http://www.everyspec.com

A detailed treatment of EMP effects upon missiles and aircraft in flight can be found in Electromagnetic Pulse Handbook for Missiles and Aircraft in Flight, AFWL.

8.6.3 Methodology and considerations. This subsection discusses considerations involving EMP analytical evaluation and identifies methodologies applicable for conducting such evaluations.

8.6.3.1 Electromagnetic aperture penetration analysis. There are three basic types of aperture penetration analysis, all dependent on the frequency of the EMP:

a. High-frequency. The high-frequency problem occurs when the wavelength is small compared to the aperture. Canopies for large FOV aircraft cockpits fall in this category for the high-frequency portion of the EMP spectrum.

b. Low-frequency. The low-frequency problem occurs when the aperture dimensions are small with respect to wavelength. The majority of EMP evaluation problems fall in this category.

c. Discrete frequency. The discrete frequency problem occurs when EM energy impinges upon apertures with finite depth and behave electrically as waveguides. The engine inlet and outlet ducts for many aircraft fall in this category.

8.6.3.1.1 High-frequency aperture penetration evaluation. Canopies for large FOV aircraft cockpits fall in this category. Sources of fields inside the cockpit are:

a. Direct free-field penetration through the canopy area.
b. Fields generated by currents flowing in the metallic structure surrounding the canopy.

The fields incident at a critical component in the cockpit area (e.g., instrument panel) are the summation of these foregoing fields. Experience has shown that a preliminary estimate of the fields at a critical cockpit component is the free-field environment. If a conductive coating is applied on the canopy surface (e.g., a gold coating for deicing purposes), the free-field is attenuated approximately 80 db. For such protection, the fields in the cockpit region are primarily magnetic, resulting from the currents flowing in the metallic structure supporting the canopy; the relatively small contribution from the free- field penetration can be ignored.

8.6.3.1.2 Low-frequency aperture penetration evaluation. The low-frequency problem occurs when the aperture dimensions are small with respect to wavelength. Simple geometric shapes can be used to develop analytical models. The surface containing the aperture is either an infinite cylinder

Downloaded from http://www.everyspec.com

or a flat plat; the evaluation method is different for each. Cylindrical modes are used for evaluation of most aircraft problems, but flat plates are useful for the evaluation of small apertures. To determine the worst-case coupling conditions, both the parallel and perpendicular EM wave impingement orientations should be considered. Using computed skin current and the impedance of the aircraft skin, the voltage drop acorss the aperture length is determined This voltage represents the generating source for the E field in the aperture.

8.63.1.2.1 Cockpit instrument panel evluation. Due to the presence of the canopy in the cockpit area, significant fields can be generated at the cockpti instrument panel. The cockpit instrument panel, with its large number of instruments, controls, and displays, contains numerous electrical and electronic components that can be vulnerable to these fields. A typical instrument panel consists of a metallic enclosure with numerous small apertures and, thus, falls into the category of low-frequency, aperture evaluation. Due to the uniqueness of each instrument panel, the number and size of the apertures will vary from panel to panel.

8.6.3. 1.3 Discrete frequency aperture effects. The cutoff frequency, f_{co}, for a circular waveguide is:

$$f_{co} = \frac{6920}{d} \text{ MHz}$$

where

d - diameter in in.

If the waveguide is three to four times longer than its diameter, about 100 db of attenuation can be achieved for frequencies below cutoff frequency, f_{co}. This method can be used to analyze portions of an aircraft that resemble waveguides or ducts. If the desired attenuation is not available for a particular aircraft opening, wire mesh can be used to short the opening and thus significantly reduce field penetration.

8.6.3.2 Electromagnetic gap penetration evaluation. Gaps represent points of entry for EMP energy, and their presence can degrade the shielding effectiveness of the aircraft structure. Examples of gaps are poor conductive joints around a door or access panel in the fuselage skin of an aircraft. The objective of an EM gap penetration evaluation is to predict the internally coupled fields. To illustrate gap evaluation methodology, a typical aircraft access door is considered. The method illustrated was developed by Bascon. An access door presents an impedance to the induced skin currents which disturbs the otherwise uniform current distribution. Some of the current will shunt around the door area, some will cross it on the outside, and some on the inside. The relative magnitudes of these currents are dependent upon the confronting impedances presented by the door. Each of the currents will generate scattered fields that couple with the environment near the joints. A typical door may be modeled as a combination of impedances. Each of the

Downloaded from http://www.everyspec.com

impedances can be examined and modeled separately. It should be observed that the inner surface current directly generates a magnetic field component within each bay which combines with the direct seam-coupled fields at the door joints. These fields should be considered additive to establish a worst-case field solution inside. This type of evaluation is well suited to computer solution for predicting the internally coupled fields in the frequency and time domain. Additional detailed information on developing access doors impedance models and computing the coupled fields is presented in Evaluation of Electromagnetic Field Penetrations through B- 1 Apertures and Gaps, Rockwell International.

8.6.3.3 Current induced on cables. The general prediction of the currents induced on aircraft cables is a formidable task due to the asymmetry of the aircraft configuration combined with an extremely complex definition of the EMP points of entry. However, many useful coupling predictions can be performed, and the results used to estimate the currents induced on the cables of a specific aircraft and to isolate important EMP hardening considerations. The only means of accurately determining cable currents is by total system tests. The following general techniques are recommended:

a. Preliminary estimates.
b. Detailed calculations.
c. Current induced on shielded cables.

8.6.3.3.1 Preliminary estimates. Early in aircraft hardening programs, preliminary estimates can be used to define a worst case or an upper bound of the currents induced onto the majority of the aircraft cables. These worst-case predictions can be used as the basis for determining the preliminary shielding requirements and the levels of voltages and/or currents that the electrical and electronic equipment will be exposed to. Preliminary estimates should be followed by more detailed evaluation for those isolated cases where the worst-case prediction will result in severe hardening penalties. Preliminary estimates of shielding effectiveness are based on existing test data and calculations combined with engineering judgment. Approximately 20 db of attenuation can be expected from the shielding supplied by the airframe. Approximately 20 db of additional attenuation can be attributed to the coupling of the internal fields with the cables and, thus, a first estimate of 35 to 40 db total attenuation can be established.

8.6.3.3.2 Detailed calculations. In detailed methods of predicting cable core currents, the following should be taken into account:

a. Terminating impedance (source and load) of all wires. For analytical methodology descriptions, see:

(1) Electromagnetic Pulse Handbook for Missiles and Aircraft in Flight, AFWL.

Downloaded from http://www.everyspec.com

(2) Cable Coupling and Shielding Analysis Techniques, Rockwell International.
(3) Coupling Analysis of Specific 6- 1 Circuits, Rockwell International.
(4) Models for Determining Skin Current Coupling to International Cables, Rockwell International.

b. The effects of apertures. For analytical methodology descriptions, see:

(1) Electromagnetic Pulse Handbook for Missiles and Aircraft In Flight, AFWL.

c. The relative locations of conductive shafts and rods. For analytical methodology descriptions, see:

(1) Aeronautical Systems EMP Technology Review, AFWL.
(2) Models for Determining Skin Current Coupling to Internal Cables, Rockwell International.
(3) Radio Engineer Handbook, McGraw Hill.

d. The location of the wire bundles relative to the fuselage. For analytical methodology descriptions, see:

(1) Electromagnetic Pulse Handbook for Missiles and Aircraft in Flight, AFWL.

e. Shadowing effects. For analytical methodology descriptions, see:

(1) Electromagnetic Pulse Handbook for Missiles and Aircraft in Flight, AFWL.

8.6.3.3.3 Current induced on shielded cables. Transmission line theory can be used to evaluate the shielding effectiveness of shielded cables. Detailed methodological information can be found in:

a. Electromagnetic Pulse Handbook for Missiles and Aircraft In Flight, AFWL.
b. Cable Coupling and Shielding Analysis Techniques, Rockwell International.
c. Coupling Analysis of Specific B- 1 Circuits, Rockwell International.
d. Models for Determining Skin Current Coupling to Internal Cables, Rockwell International.
e. Preliminary B-1 Analysis and Design Requirements, Rockwell International.
f. Final Report On the B-1 Shielding Effectiveness Study, AFWL.

Downloaded from http://www.everyspec.com

8.6.3.4 Antenna cable currents. Excessive EMP-induced currents on antenna cables can result in damage to associated sensitive circuits. An evaluation should be performed to determine the extent of potential problems in this area. The response calculations of a blade antenna can be evaluated in terms of effective height and impedance characteristics. When computing the antenna effective height, antennas mounted on the aircraft fuselage can be treated as If they are on a ground plane if the physical dimensions of the antenna are comparatively smaller than the physical size of the aircraft fuselage. This is a valid assumption, except for antennas illuminated by the whole aircraft as a transmitting/ receiving antenna system. The computed current is used in conjunction with the antenna Impedance to derive the open circuit voltage. By applying the Thevenin antenna equivalent circuit, the antenna cable current can be obtained. If the computed antenna cable currents are less than the susceptibility of the equipment connected to the antenna cable, the antenna design complies with EMP hardening requirements. If these cable currents are more than the susceptibility of the equipment, then, protective measures may be implemented. Detailed descriptions of antenna evaluation methodologies are documented in:

a. Preliminary Analysis of Deliberate Antenna Cable Current and Voltage Gradient of RC/SK, Rockwell International.
b. Analysis of B-1 EMP Induced HF Antenna Cable Current and Load Voltage, Rockwell International.
c. EMP (Electromagnetic Pulse) Handbook, 6 Volumes, General Electric Company - TEMPO, DNA.

8.6.3.5 Equipment susceptibility. The definition of the EMP-induced currents and voltages that are coupled into the interconnecting wiring, combined with a knowledge of the susceptibility of the electrical and electronic equipment, establishes the vulnerability of the aircraft to the nuclear EMP environment. Equipment susceptibility aspects of the EMP hardening problem include:

a. EMP-induced damage.
b. General hardening techniques against permanent damage.
c. General hardening techniques against temporary damage (upset).

8.6.3.5.1 EMP-induced damage. A basic understanding of the damage that will result when electrical and electronic components are subjected to EMP-induced voltages and currents is essential background for acquiring an appreciation of EMP hardening problems. To provide this background, the following EMP-induced damages are addressed:

a. Causes of permanent damage to components.
b. Susceptibility of integrated and hybrid circuits.
c. Component burnout and upset data.

Downloaded from http://www.everyspec.com

8.6.3.5.1.1 Causes of permanent damage to components. Most EMP component damage is a result of excess heating in the device by the high electrical current. Semiconductor junction electrical shorting, burnout of IC metal-interconnects, and some resistor failures are of this type. Such failure mechanisms can usually be explained in terms of peak-power threshold of the device for short-duration pulses. Other failures are voltage related. Oxide breakdown in IC or MOS/FET devices are of this type. Most EMP failures of electroexplosive devices, relays, transformers, and electromechanical sensors are due to arcing from excess voltage. Because the failures of semiconductor devices are of the greatest concern, a detailed discussion of their failure modes and failure prediction follows:

a. Semiconductor junction burnout. Semiconductor damage thresholds have been investigated, both theoretically and experimentally. The results of these studies clearly indicate that a semiconductor can withstand a much larger peak-power of short duration than the steady-state power rating of the device would suggest. The power threshold is typically orders-of-magnitude for typical EMP transient duration. In general, the shorter the pulse duration, the more peak-power the device can withstand.

(1) Most of the tests to date have been performed with square pulses of different durations. The data are applied to EMP waveforms by the assumption that the failure occurs during the first half-cycle (usually the largest amplitude peak) of the EMP waveform. The difference in waveshapes is probably unimportant, since the failure is total energy dependent. Waveforms of the same energy would be expected to produce the same damage. Cumulative heating by subsequent half-cycles of the EMP waveform are assumed to be negated by the cooling that takes place between peaks. Thus, as a first approximation, the stress on the component is assumed to be defined by the heating of the first (or largest) half-cycle of the EMP waveform. Roughly, the duration of this first half-cycle is analogous to the square-wave pulse duration used for semiconductor tests.

b. Metallization and lead-wire burnout in ICs. In ICs, the burnout of metal conductors is similar to the junction burnout phenomenon in that the material is heated to the melting point (after which it flows and the circuit breaks). These failures often occur near the middle of a span for long-duration pulses because the ends are cooled by conduc tion. For short-duration pulses, the failures often occur near the ends because of the contact resistance at the ends. The failures usually occur at weak points caused by scratches,

Downloaded from http://www.everyspec.com

chips, cracks, or other part defects. Current crowding at sharp corners in the conductor can also cause failures to occur at these corners (corners should be curved).

c. Oxide breakdown in ICs. In general, the oxide failures are due to excessive electric fields across a thin oxide layer. Many oxide layers in ICs are bothered with dimples, or partial pinholes, which can appear as a weak spot in the oxide, particularly if it is directly under a metal lization layer. Such pinholes can be the source of E field concentra tions under the metallization. Under a sustained application of voltage, metal whiskers can form deeper and deeper into the pinhole with time and, thus, become more and more vulnerable to voltage breakdown.

d. Burnout of metal-to-metal bonds in ICs. Metal bonds, such as gold wire-to-aluminum metal lization thermal-compression bonds, can have excessive bond resistance. If originally contaminated by foreign chemicals, the bond may degrade with time, leading to excessive bond resistance. In either case, the resistance of the bond makes burnout at that location more likely by excessive heating at the local resistance point.

e. Damage to devices by arcing. Parts subject to arcing are usually damaged principally by the high currents which flow during the arc. This damage can show Up as pitting of conductors, charring of insulating material, or ignition of explosive materials, fuels, or other combustible materials.

f. Damage to sensitive detectors. Little data are available to identify the causes of failures in sensitive special-purpose detectors, but it is expected they will be related to one of the aforementioned effects, with the possibility of a few new effects. Tests of such components are recommended.

8.6.3.5.1.2 Susceptibility of integrated and hybrid circuits. This class of components includes digital and linear ICs, MSI and LSI devices, and all types of hybrid circuits. Since greatest concern about EMP damage was initially centered around operational systems, only a small population of ICs was encountered. To analyze the EMP susceptibility of newer systems, particularly those currently being designed, requires that integrated and hybrid circuit sensitivity to transient damage be thoroughly assessed. Results of microcircuit tests indicate that:

a. The power required to cause failure is related to the internal impedances.

Downloaded from http://www.everyspec.com

b. More power is required to cause a linear microcircuit to fail than a digital microcircuit.
c. The input terminals are the most vulnerable.
d. The weakest technology (dielectrically isolated, thin-film resistor devices) fails because of the thin-film resistors.
e. The strongest technology is associated with glassivation (i.e., coating the chip with a silicon dioxide layer for protection purposes).
f. The principal failure mechanism was junction shorts.
g. The presence of aluminum in shorted regions is not essen tial for junction failure.
h. Metal lization burnout for very short pulse widths (200 ns) is dependent on the geometry of the metal libation.
i. Metal lization burnout for long pulse widths (200 ns) is dependent on the heat-sinking properties of the device.
j. The time and temperature used for alloying aluminum-silicon contacts has a significant effect-on the failure level.

Recommendations for hardening of microcircuits include:

a. Use high-impedance circuitry.
b. Avoid thin-film resistors.
c. Glassivate the microcircuit.
d. Maximize aluminum thickness and maximize the aluminum-to-oxide thickness ratio.
e. Use low-temperature, short-time aluminum-silicon alloying process.

8.6.3.5.1.3 Component burnout and upset data. Components subject to functional damage include:

a. Active electronic devices, vacuum tube, and semiconductor devices, especially high-frequency transistors, ICs, and microwave diodes.
b. Passive electrical and electronic components, especially those of very low power or voltage ratings or precision components where a small parameter change is significant.
c. Semiconductor diodes or SCRs, especially those used in power supplies.
d. Squibs, detonators, and pyrotechnical devices.
e. Rocket fuels containing premixed oxidizers, especially those having a low-initiation energy.
f. Meters, indicators, or relays, especially those employed to control power or flight and guidance.
g. Insulated RF and power cables, especially those running near maximum ratings and which are exposed to humidity or abrasion.

Downloaded from http://www.everyspec.com

h. Components connected in systems containing large amounts of stored electrical energy which would be sensitive to an unanticipated release of this stored energy.

Components or subsystems subject to operational upset include:

a. Low-power or high-speed digital processing systems.
b. Memory units (especially for digital processing) such as core memories, drum storage, and buffers via wiring.
c. Control systems for in-flight guidance.
d. Protection or control systems for the distribution of 60 or 400 Hz power.
e. Subsystems employing long integration or recycling times for synchronization acquisition or signal processing, such as gyros.

EMP vulnerability evaluations should include all components and subsystems which fall into one or more of the above categories.

8.6.4 Testing. Testing is required to verify compliance with EMP hardening requirements and analytical calculations of system and subsystem response.

a. Component burnout and failure tests are required to determine circuit failure levels due to EMP-induced voltages and currents.
b. Shielding effectiveness tests are performed to verify wire bundle and enclosed shielding requirements.
c. Protection device tests are performed to assess the utility of surge protection.
d. Cable core current injection tests are required to evaluate the response of electrical and electronic equipment boxes to established cable current transients.
e. Total system tests are required to verify analytically predicted system response and hardness of the air vehicle to the free-field EMP hardening requirements.

8.6.4.1 Component burnout/failure tests. Circuit susceptibility can be predicted by calculating the total power delivered to the Individual circuit components and then comparing this power to the power failure levels of the circuit components. Semiconductor junction burnout levels can be predicted from component damage constants; these can be determined by component burnout and/or failure tests. Damage constants are usually defined, as follows:

Downloaded from http://www.everyspec.com

$$\frac{P}{A} = \kappa \tau^{-1/2}$$

where

P = the square wave pulse power threshold of the device in kW,
A = junction area of the device in cm^2,
K = a proportionality constant known as the damage constant in kW- $\mu^{1/2}/cm^2$,
τ = the square wave duration in μs.

The form of the equation is the same for diodes or transistors, but the constant, K, is different. The constant, K, is also slightly different for different types of transistors (i.e., germanium versus silicon, or silicon planar devices versus Mesa construction). The foregoing equation applies to the forward bias condition. Values for current burnout are somewhat lower for reverse bias conditions. Prediction inaccuracies result because the current density is not uniform over the junction area, leading to localized" hotspots which cause premature failure in some cases. While the detailed processes involved in the failure are not completely understood, the phenomenon is known to result from heating of the semiconductor material to approximately its melting temperature. Theoretical predictions of this failure are made difficult by the fact that the specific heat and thermal conductivities are not constant over the temperature range of Interest, nor is the resistance of the junction well known over the required dynamic range. Thus, although theoretical thermal models do exist for the phenomenon, the empirical equation is more useful to engineers. In practice, it is not always easy to determine the constant, K, and the junction area, A, accurately without tests. However, estimates of these parameters can be made in several ways. The failure thresholds can be predicted, within roughly a factor of three, if the junction area can be accurately determined from the part supplier or other source. There are several other techniques by which the damage constant K can be estimated, such as estimates based on case thermal resistance, ambient thermal resistance, or junction capacitance and breakdown voltage. However, these techniques are, in general, less accurate.

8.6.4.2 Shielding effectiveness test. Shielding effectiveness (SE) tests are performed on wire bundle shields and enclosures to verify that the shielding provided satisfies the EMP shielding requirements. SE for wire bundle shields is given by:

$$SE = 20 \log \frac{(Z_1 + Z_2)}{Z_t L}$$

or

$$SE = 20 \log \left(\frac{I_{shield}}{I_{cable}}\right)$$

Downloaded from http://www.everyspec.com

where

Z_1 and Z_2 = wire terminating impedance to the shield,
Z_t = transfer impedance,
L = shield length,
I_{shield} = current on the shield,
I_{cable} = current on the cable (wire bundle).

SE can be calculated from the first of the foregoing equations if Z_1, Z_2, $_t$, and L are known. SE can be determined by tests from the second of the foregoing equations by measuring I_{shield} and I_{cable} at different frequencies. Wire bundles can be effectively tested in two types of fixtures (i.e., the rapid attenuation measurement system (RAMS), or trough fixture and the quadraxial test fixture):

a. RAMS, or trough test fixture. This fixture consists of inner and outer troughs and a variety of resistance net works. With the test specimen installed, the combination serves as a pair of coaxial transmission lines. The two troughs and the installed specimen are spaced relative to one another to yield a uniform impedance along both transmission lines, with both lines terminated in their characteristic impedance. The trough configuration is easy to adjust or calibrate because of ease of access.

b. Quadraxial test fixture. This test fixture consists of two coaxial transmission lines, with the test specimen shielding the center conductor of one transmission line. The outer conductor of the inner transmission line is the center conductor of the second transmission line. This inner cylinder is the driven member. Both transmission lines are matched to the characteristic impedance of the lines. The electrical circuit is the same as for the trough fixture.

The RAMS and the quadraxial test configurations are not to be confused with the triaxial test configuration, which is not a recommended test setup. The triaxial test uses a single cylinder or trough around the specimen. The specimen is the driven member. The specimen shield is the ground return. The cable bundle is terminated in its characteristic impedance at the signal generator with a receiver at the opposite end. This triaxial method has the disadvantage of having the reference for the signal generator and the receiver at two different points. Also, the signal line voltages can be perturbed by the movement of personnel. This device is limited to frequencies below 10 MHz because of resonance effects. The RAMS and quadraxial test fixtures do not have this problem.

Downloaded from http://www.everyspec.com

8.6.4.2.1 Enclosure shield testing. An effective means of providing EMP protection is to use sections of the airframe structure as shielded enclosures. Strip transmission line tests can be used to evaluate the SE of the structural joints of these shielded bays. In a typical strip transmission line test configuration, a uniform current is injected across one side of a sample joint, and the voltage developed on the other side of the joint is measured. From these data, the transfer impedance can be readily determined and converted to SE. Test guidelines for strip transmission line testing Include:

a. Verify DC resistance of all mounting joints of the strip line. A preliminary indication of good joint bonds can be obtained by using a DC current source and measuring the voltage across the joint.
b. Verify that the strip line has a flat response or matched impedance over the frequency band.
c. Verify the calibration of all instrumentation.
d. Record input current and output voltage for four swept frequency bands.

8.6.4.3 Protective device EMP tests. EMP protective devices (e.g., Zener diodes, spark gaps, varistors, filters, etc.), although not generally recommended as a means of circuit hardening, do have specific application for limiting EMP-induced currents or voltages to sensitive devices. Testing is required to assess the utility of these protection devices and to identify the most effective types for a specific application. The following data are required from tests to evaluate EMP protection devices:

a. Power handling capabilities.
b. Response time.
c. Overshoot.
d. Reflection.

Square-wave pulsing will allow easy testing of low-voltage devices. A high-energy capacitive discharge pulser can be used to test high-voltage devices. For either configuration, the maximum power handling capabilities are determined from the voltage across the device and the conducted current through the device. Device response time, overshoot, and reflection characteristics are determined by recording pulser waveshape and device response.

8.6.4.4 Cable core current injection tests. Prediction of the common mode currents induced on aircraft cables provides the basis of defining EMP hardening requirements at the cable interface of electrical and electronic equipment boxes. Cable core current injection tests are required to evaluate the response of electrical equipment boxes to cable current transients. The electrical/electronic equipment test is referred to as bulk current testing. A bulk current pulse generator is used to inject a damped sinusodial current

Downloaded from http://www.everyspec.com

on to the interfacing cables by pulsing one cable at a time with waveshapes that match those predicted to couple into the system. At each frequency, the amplitude of the injected pulse is incrementally increased until the maximum specified amplitude is reached or until a malfunction results. In addition to monitoring the bulk cable current, individual interface line currents and voltages may be measured for added threshold data. Since induced cable transients are ground seeking, Interface lines and circuitry which result in a low impedance to the equipment case are of particular interest for current monitoring. Likewise, interface circuitry which is a relatively high impedance to case will have a potential failure mode due to induced transient voltages which should be monitored. Since system response and susceptibility may be affected by the equipment functional or operational mode, multiple testing in selected or representative modes will account for these variations. In order to perform testing with the equipment operational, the load box must contain necessary bias circuitry. This load box can also be used to supply the necessary control circuitry to simulate the prescribed operational modes during the line replacement unit (LRU) cable pulsing. Additional and more detailed information on cable core current injection tests is available in Guideline for 6-1 EMP Current Injection Testing, Rockwell International.

8.6.4.5 System tests. Because of the complexity of the aircraft systems, analytical predictions of EMP response are at best difficult and contain large uncertainties. Total system tests are required to verify analytically predicted system response and to verify hardness of the air vehicle to the free-field EMP hardening requirements. EMP testing of a complete aircraft system is very complex, requiring experienced test personnel to obtain valid data for reasonable cost. The entire aircraft is immersed in the simulated EMP environment, and cable currents, voltages, and fields are measured to verify the analytical predictions of coupling modes, SE, and system response. System testing can locate weak or susceptible points in the system, which, in conjunction with analytical evaluation, can be used to identify required design changes necessary to produce a hardened system. Primarily, two types of EMP free-field test simulators are available for system tests:

a. Bounded-wave simulator. This is the most widely used EMP field simulator. The principle of operation is to guide an EM wave across a test object situated between two metallic surfaces of a transmission line configuration. Some of the presently operational bounded-wave test facilities are:

(1) AFWL-LASL Electromagnetic Calibration and Simulation (ALECS) facility at Kirtland Air Force Base.
(2) Advanced Research EMP Simulation (ARES) facility at Kirtland Air Force Base.

Downloaded from http://www.everyspec.com

b. Radiated-wave simulator. A free-field is radiated from simulators such as a biconic cone or long-wire. The field is not confined within the boundaries of the simulator, Some of the presently operational radiated test facilities are:

(1) Sandia long-wire facility, at Kirtland Air Force Base.
(2) AFWL EMP dipoles at Kirtland Air Force Base.
(3) TRESTLE at Kirtland Air Force Base.
(4) Harry Diamond Laboratories at Woobridge, VA.

Two concepts of system testing are:

a. Threat level testing. If an adequate simulation of the threat can be provided over a working volume large enough to include the entire aircraft, EMP hardness can be measured by increasing the field magnitude until upset or permanent damage occurs or until threat level is obtained.

b. Less than threat level testing. Testing at less than threat level, field, current, and voltage probes are used to monitor system response at critical points. This response is analytically scaled up to threat level and compared to electrical and electronic equipment damage levels. There is less chance of damaging the aircraft equipment using this concept.

Downloaded from http://www.everyspec.com

9. VULNERABILITY, SURVIVABILITY, AND TRADE-OFF EVALUATIONS

The following subsections present general task identification, flow, interaction, and description which can be used as guidelines in setting up an overall nuclear survivability evaluation or design program. The information presented is meant to serve only as a guideline and may require modification based upon the particular problem under study. Documents applicable to vulnerability, survivability, and trade-off evaluations and design are:

a. USAAMRDL-TR-74-48A, Survivability Design Guide for U.S. Army Aircraft Nuclear Hardening.
b. AFSC Design Handbook DH 2- 7, System Survivability.
c. Defense Intelligence Agency, Physical Vulnerability Handbook.
d. JTCG/AS Simplified Techniques for Vulnerability Trade-off Analysis.
e. JTCG/AS Guidebook for Preparation of Aircraft System Survivability Requirements for Vulnerability Trade-off Analysis.

9.1 Vulnerability and survivability evaluations. Vulnerability and trade-off evaluations should be conducted during the conceptual and detailed design phases of aircraft development since they are prerequisites to the efficient attainment of a viable, survivable aeronautical system. These evaluations Include several essential elements, with the depth or detail varying with the phase of system development. A representative task flow diagram for conducting an overall survivability/ vulnerability effectiveness study for nuclear threat scenarios is depicted in Figure 1. That portion of the evaluation which is contained within heavy-dashed lines is vulnerability-oriented tasks; the dotted lines denote the trade-off tasks. The evaluation is an iterative process, with the appropriate task repeated, as required, to define the optimum level of hardening requirements and hardened design. The flow of tasks in Figure 1 is applicable to different phases of the system development. For example, during the conceptual phase of system development, the vulnerability and trade-off evaluation effort is directed toward:

a. Establishing the level of each nuclear effect that the aircraft is expected to encounter.
b. Defining the baseline hardening criteria.
c. Obtaining data on the impact of varying the hardness level(s) from the baseline values.
d. Supporting the mission/cost-effectiveness evaluation to establish the significance of employing various levels of survival enhancement techniques.

The output of these efforts will form the basis for the system design and development specifications. As the development of the system proceeds and the design becomes more defined, the vulnerability and trade-off evaluations become oriented toward:

Downloaded from http://www.everyspec.com

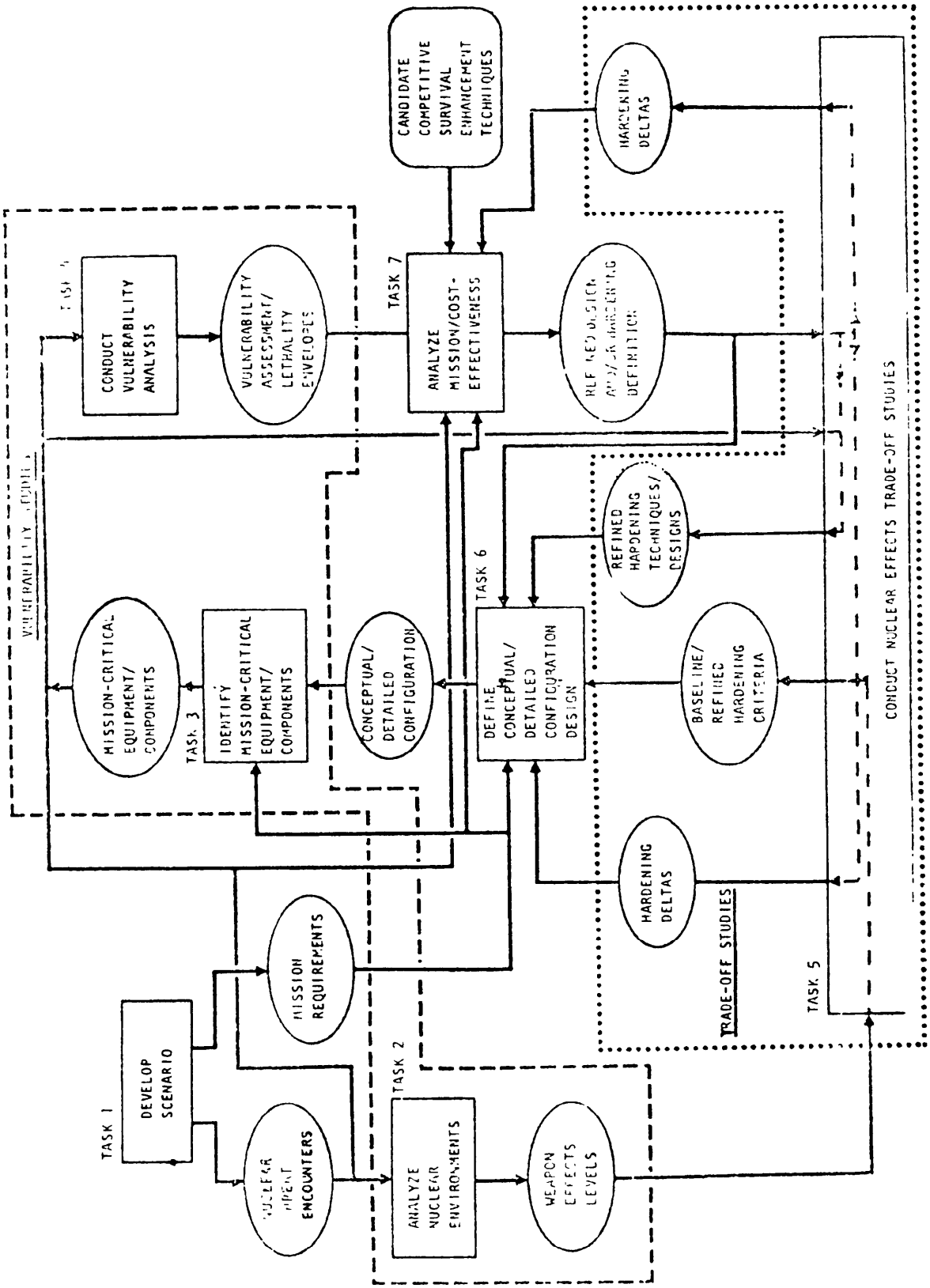

FIGURE 1. Task Flow Diagram for Conducting a Survivabi1ity and Vulnerabi1ity Effectiveness Study for Nuclear Threat Scenarios.

Downloaded from http://www.everyspec.com

a. Identifying the mission-essential equipment/components that are candidates for the imposition of hardening specifications.
b. Insuring that the system is being designed to the hardening specifications.
c. Assessing the inherent hardness of the system design.
d. Evaluating the lethality envelope for each nuclear weapon effect for the selected nuclear threat encounters to promote a balanced protective envelope about the aircraft.
e. Defining the design impact of, or comparing, specific hardening techniques measured in terms of system weight, cost, safety, maintainability, reliability, performance, and schedule.
f. Providing refined support for the mission/cost-effectiveness evaluation.

The development of scenarios for the purpose of defining the nuclear threat encounters and the mission requirements (task 1, Figure 1) is usually accomplished by the procuring agency and is therefore not addressed. Evaluation of the nuclear weapon environments that will result from the specified nuclear threat encounters (task 2) and the conduct of vulnerability evaluation (task 4) both require a capability to predict the nuclear weapon environments that result from nuclear explosions. Hand calculation methods can provide a rapid means of estimating nuclear weapon environments, and computer programs can be used for conducting detailed environmental analyses. The identification of those equipment and components required for an aircraft to complete its designated mission following exposure to nuclear weapon environments (task 3) is essential, not only to the conduct of vulnerability evaluations, but also to the allocation and implementation of nuclear hardening requirements at the component level. The conduct of vulnerability assessment and the development of vulnerability lethality envelopes which define the distances from the aircraft at which nuclear detonations will produce mission kills (task 4) completes the tasks performed under vulnerability. The primary objective of the nuclear effects trade-off studies (task 5) is to provide a data base that will:

a. Permit selection of an optimum level of hardening to each weapon effect.
b. Identify the most effective techniques/designs for hardening.
c. Establish the deltas (e.g., weight, cost, safety, maintain ability, reliability, performance, schedule) associated with increasing or decreasing each hardness level.
d. Support mission/cost-effectiveness evaluations to evaluate hardening the aircraft design, compared to various degrees of other survival enhancement techniques.

Downloaded from http://www.everyspec.com

Design methodologies are applied initially to define the conceptual configuration and then later to refine the detailed design (task 6). Large-scale, scenario-oriented, mission/cost-effectiveness evaluations are performed to establish the significance of employing various levels of enhancement techniques (e.g., nuclear/conventional hardening, EM countermeasures, IR suppression, IR reduction, tactics, defensive weapons) upon selected measures of effectiveness (e.g., unit cost, life- cycle cost, and targets destroyed) (task 7).

9.2 Environmental evaluation. The capability to predict the environmental levels that result from nuclear explosions is an essential element, and it is required to conduct aircraft vulnerability evaluations. Weapon environments must be predicted for the following input data:

a. Weapon type and yield.
b. Height of burst.
c. Altitude of aircraft.
d. Distance separating aircraft and burst.
e. Atmospheric conditions.

In this section, nuclear weapon environmental levels are addressed for:

a. Blast.
b. Thermal radiation.
c. Nuclear (gamma and neutron) radiation.
d. EMP.

9.2.1 Blast environment. Prediction of the blast environment requires knowledge of:

a. The yield of the weapon.
b. The heights of the aircraft, burst, and ground; and the range from the burst to the aircraft at the time of detonation.

See Systems Analysis Blast Environment Routine, AFWL, for Methodology description.

9.2.2 Thermal environment. Prediction of the thermal environment requires knowledge of:

a. The yield of the weapon.
b. The height of the aircraft, the height of the burst, and the range from the burst to the aircraft.
c. The angle between the normal to each panel and the line of sight from the burst to the aircraft.
d. The thermal fraction. The thermal fraction is the proportion of the weapon yield that is generated as thermal energy and is a function of both the height of the burst and its yield.

Downloaded from http://www.everyspec.com

e. Atmospheric transmittance at the altitude of interest. An additional consideration is whether, under the circumstances of the problem, the fireball can be considered as a point source.
f. Thermal flux as a function of time.
g. The spectral character of the radiation from the fireball and its scattering by the atmosphere.
h. Ground and cloud reflections.
i. Relative motion of aircraft and fireball.

See TRAP, A Digital Computer Program for Calculating the Response of Aircraft to the Thermal Radiation From a Nuclear Explosion, AFWL, for methodology descriptions.

9.2.3 Nuclear radiation environments. Prediction of the nuclear radiation environment requires knowledge of:

a. The yield of the weapon.
b. The height of the burst, the height of the aircraft, and the range from the burst to the aircraft.

See SMAUG, A Computer Code to Calculate the Neutron and Gamma Prompt Dose Environment in the Vicinity of an Atmospheric Nuclear Detonation, AFWL, for methodology descriptions.

9.2.4 Electromagnetic pulse environment. The range and area coverage of EMP from a high-altitude burst (above 30 kilometers) are much greater than those for the other weapon environments. In fact, a single high- altitude burst can produce a serious threat for all aircraft within an area the size of the entire mainland United States. Because of this broad coverage, the EMP resulting from a high-altitude burst is not sensitive to distances between the burst point and the aircraft In effecting specified levels of damage or response (e.g., mission completion level of response) to the aircraft. On the other hand, because of the far-reaching EMP effect produced by a high-altitude burst, the specification of EMP hardening criteria is an essential requirement of any nuclear hardening specification. Unlike the high-altitude burst, EMP resulting from surface or near-surface detonations is sensitive to range. For very low yields, EMP resulting from surface detonations can produce a serious threat at distances from the detonation where the other weapon environments have degraded to levels that will result in little or no damage to the aircraft. Prediction of the EMP environment, in general, requires knowledge of:

a. The yield of the weapon.
b. The height of burst, the height of the aircraft, and range from the burst to the aircraft.
c. The local earth magnetic field.

Downloaded from http://www.everyspec.com

Predicting the EMP environments resulting from surface burst involves a very complex set of calculations not amenable to hand calculation methods. It is recommended that guidance be obtained from EMP environment prediction specialists when a requirement exists to predict the EMP for a specific set of conditions. See the following documents for methodology descriptions:

a. EMP (Electromagnetic Pulse) Handbook, General Electric Company - TEMPO, DNA.
b. EMP Handbook for Missiles and Aircraft in Flight, AFWL.

9.3 Mission-essential functions and components identification. Nuclear encounters are unlikely to occur in the everyday military applications of aircraft. For this reason, weight and cost penalties which would result from hardening aircraft to an undamaged criterion are unwarranted. Rather, aircraft should be hardened to a mission completion criterion which allows for some performance degradation in carrying out the mission. A significant reduction in hardening penalties can be realized through the use of a mission completion criterion. Methods for identifying system functions required for the aircraft to complete its designated mission and equipment or components (i.e., mission-essential equipment/components) that are required to withstand the hostile nuclear environments and still perform the mission-essential functions are addressed in this section. While the principles involved in identifying mission-essential equipment are simple and straightforward, the actual task of identifying mission-essential equipment for a specific aircraft can be quite formidable. This task involves the review, evaluation, and categorization of numerous aircraft performance functions and components. Mission-essential components can be identified by sequentially:

a. Identifying the system level functions (e.g., maintain con trolled flight) that must be performed by the aircraft in order to complete its mission in accordance with the speci fied mission completion criteria.
b. Identifying the subsystems (e.g., flight control subsystem) required for the performance of the system level functions identified in a.
c. Identifying the subsystem level functions (e.g., actuate control surfaces) that must be performed by the subsystems identified in a. to Insure mission completion.
d. Identifying the equipment/components (e.g., flight control linkages) required for the performance of the subsystem functions identified in c.

Methods for accomplishing these four foregoing tasks are outlined in subsequent paragraphs, including example data for systematically organizing the identification and correlation process. These tables and example data are presented as an illustration only and do not reflect the identification of mission-essential components for a specific aircraft.

Downloaded from http://www.everyspec.com

9.3.1 Mission completion criteria. Mission completion example criteria - the aircraft should be capable of surviving, after being subjected to the specified nuclear environments, to the following listed criteria:

a. Continued safe operation for at least 30 minutes after damage received during the following operational modes:

(1) In-flight cruise - maximum load.
(2) In-flight cruise - minimum load.

b. Completing at least 30 primary mission flights following a period of 24 hours of elapsed time for repairs after sustaining damage effects during the following operational modes:

(1) Parked - prepared for attack.
(2) Parked - prepared for flight.
(3) In-flight cruise - maximum load.
(4) In-flight cruise - minimum load.

9.3.2 System level functions. System level functions are identified by selecting those functions required for mission completion. A systematic approach is to relate these functions to the mission phases. The system level functions provide the basis for identifying the particular subsystems required for mission completion.

9.3.3 Subsystems. In this step, the mission-essential system level functions are related to the subsystems which are required for the accomplishment of these functions. The identified subsystems provide the basis for defining the subsystem level functions that must be performed to insure mission completion.

9.3.4 Subsystem level functions. In this step, the subsystem level functions required for mission completion are identified. The essential subsystem functions provide the basis for identification of the related equipments and components required for mission completion.

9.3.5 Equipment and components. An FMEA is performed to identify those equipments/components within each subsystem required to perform the mission-essential subsystem functions and to determine which of the identified equipments/components is susceptible to a particular nuclear weapon environment. The FMEA should be carried out for each mission-essential aircraft subsystem, down to the equipment and component level and equipment list assembled. Each equipment and component should be classified according to its mission essentiality and the nuclear environment to which it must be hardened. General degrees of essentiality of equipment and components are:

Downloaded from http://www.everyspec.com

a. Category I - Mission-essential - Primary.

(1) The normal or preferred mode of performing a mission-essential function.

b. Category II - Mission-essential - Backup.

(1) An alternate mode of performing a mission-essential function in the event of loss of the primary mode.

c. Category III - Not mission-essential - Enhances survivability or could cause secondary hazards.

(1) An equipment/component whose loss would not prevent mission completion, but could significantly degrade the performance capabilities of the aircraft, or could result in secondary hazards to mission-essential equipment.

9.4 Vulnerability evaluation. The primary objectives of a nuclear vulnerability evaluation are:

a. To determine the nuclear environmental levels which will produce an aircraft response resulting in a mission kill. This information defines the levels of hardness of the aircraft to the various nuclear weapon environments.

b. To generate nuclear vulnerability envelopes which define the distances from the aircraft at which nuclear detona tions will produce mission kill nuclear environmental levels. The relative sizes of these envelopes should be compared for the purpose of determining if the aircraft is overhardened or underhardened to a particular nuclear environment.

Typical nuclear vulnerability envelopes are those for:

a. Overpressure.
b. Gust velocity.
c. Thermal radiation.
d. Prompt gamma rate.
e. Neutron fluence.
f. Crew dose.

If a weapon is detonated on or inside an envelope, the resulting environment will prevent the aircraft or crew from completing the mission. On the other hand, if the weapon is detonated outside an envelope, the aircraft will retain a mission completion capability. If the gust velocity hardening requirement is driving the design of a particular aircraft, this requirement should be reduced until the gust velocity envelopes are approximately the same size as the other vulnerability envelopes. A trade-offs study is required

Downloaded from http://www.everyspec.com

to evaluate the total system impacts resulting from changes to the hardening criteria. In addition to aircraft design and performance definition, and mission completion criteria, the definition of the nuclear threat encounters is a primary input to the conduct of a nuclear weapon effects vulnerability evaluation. The weapon yield, range of burst heights at which the weapon will be detonated, and the operational status (or point in the aircraft mission) when the weapon is encountered define a nuclear threat encounter. Evaluating the vulnerability of aircraft to a mission completion criterion is emphasized in this section, but the methodology presented is also applicable for evaluating the vulnerability of aircraft to other criteria. Examples of other criteria are sure-kill (the aircraft crashes or is damaged to the extent that it cannot sustain flight) and sure-safe (the aircraft is undamaged). General approach guidelines for performing vulnerability evaluations are presented in subsequent subsections that include:

a. Thermal radiation and blast.
b. Nuclear radiation.
c. EMP.

Detailed vulnerability methodologies are presented in:

a. Handbook for Analysis of Nuclear Weapons Effects On Aircraft, DASA.
b. Survivability Design Guide for U.S. Army Aircraft Nuclear Hardening, U.S. Army Air Mobility Research and Development Laboratory.
c. Design Handbook DH 2- 7, AFSC.

9.4.1 Blast and thermal radiation. A task flow diagram for conducting nuclear thermal radiation and blast vulnerability evaluations is presented in Figure 2. Vulnerability evaluations for nuclear thermal radiation and blast environments are combined in this one diagram, because:

a. They both affect the externally exposed components of the aircraft.
b. The combined effects (if applicable) of the thermal pulse and the blast wave must be considered (i.e., the blast wave impacting a heated surface).

Exposed components that are relatively susceptible to the thermal radiation and blast environments and whose failure would result in mission kill are identified in task 1, Figure 2. The objective of task 1 is to reduce the overall effort by eliminating the unnecessary evaluation of components that are inherently harder to the blast and thermal radiation environments. For example, thick aircraft skins or heavy structural members are less susceptible than possibly the canopy or thin skins. The mission completion criterion provides a basis for selecting susceptible components whose failure

Downloaded from http://www.everyspec.com

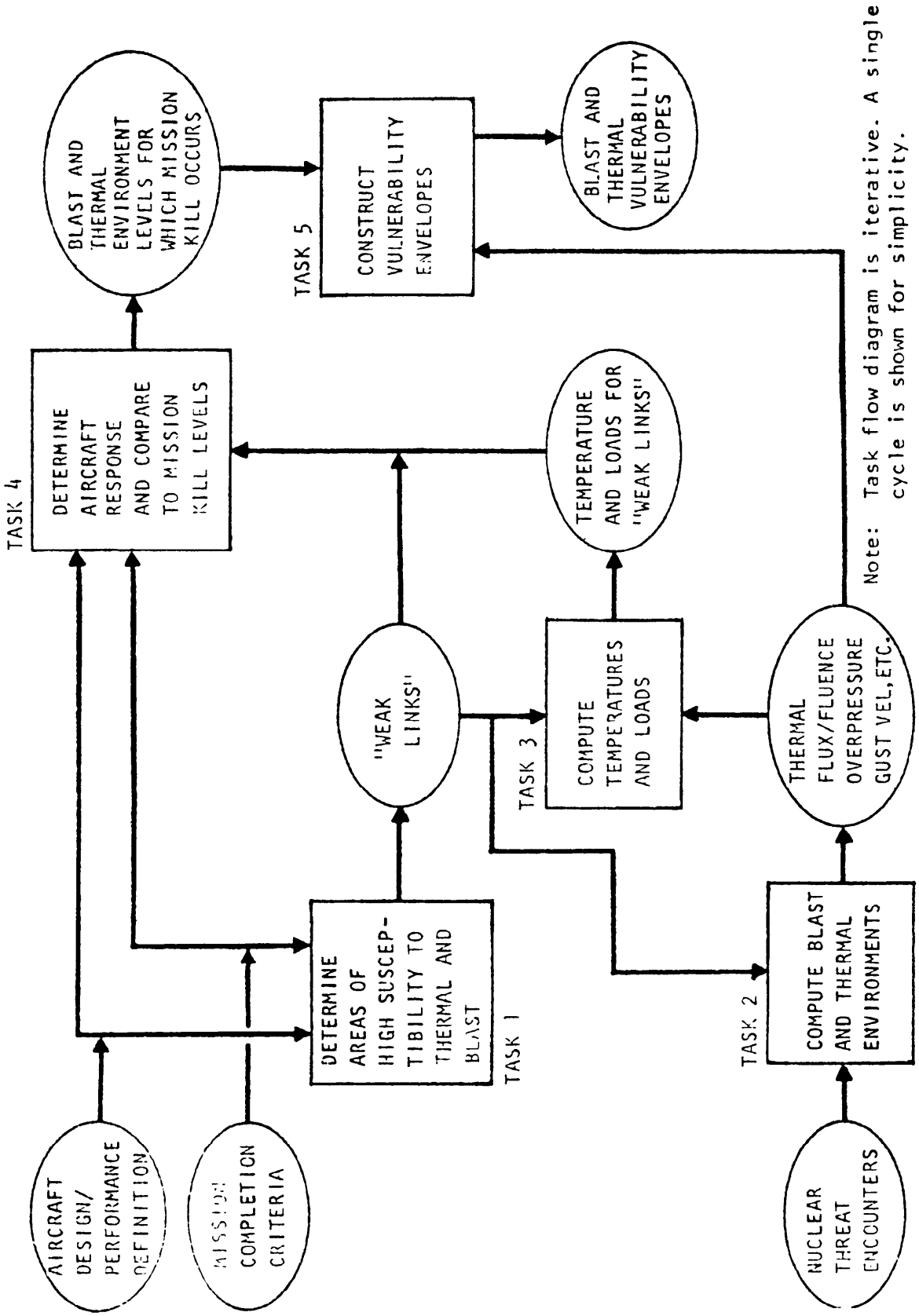

FIGURE 2. Task Flow Diagram for Conducting Nuclear Blast and Thermal Radiation Vulnerability Analysis

Downloaded from http://www.everyspec.com

or combined failures would result in a mission kill. For example, the failure of a non-load-carrying access door would probably not contribute to a mission kill. The output of task 1 is a list of weak links which are analyzed under tasks 2 through 4 which are iterative. For the nuclear threat encounter being evaluated, an aircraft burst range is estimated that will produce a mission kill. The thermal radiation and blast environments produced at the selected range are predicted in task 2, the resulting temperatures and loads are determined in task 3, and the aircraft response is determined in task 4. If the predicted response is less than that required to produce a mission kill, or if the response is much more severe than required to just produce a mission kill, the aircraft burst range is adjusted accordingly and the environments are recalculated in task 2. Tasks 2 through 4 are repeated until the level of response is determined which will just result in a mission kill. Based on the computed mission-kill level of response (output of task 4) and the thermal radiation and blast environment data (output of task 2), vulnerability envelopes which define the distances from the aircraft to burst locations are constructed in task 5. This procedure is repeated until envelopes have been generated for each nuclear threat encounter.

9.4.2 Nuclear radiation. A task flow diagram for conducting a nuclear radiation vulnerability evaluation is presented in Figure 3. Nuclear radiation vulnerability envelopes should be generated in this evaluation for:

a. Crew dose.
b. Prompt gamma rate.
c. Neutron fluence.
d. Total ionizing dose (electronics).

Mission-essential equipment which includes solid-state electronic components is identified under task 1, Figure 3. Using the crew performance requirements as a basis, radiation levels that will result in crew incapacitation and subsequent mission kill are identified in task 2. The vulnerability of the mission-essential electronic equipment is determined by test or evaluation in task 3. A good first approximation is to assume that the aircraft structure does not provide any shielding of the electronic equipment from the nuclear radiation. For most aircraft burst orientations and equipment locations, this is a good approximation. Applying this approximation, the electronic equipment box or circuit that will fail at the lowest radiation level (i.e., is the most vulnerable electronic equipment box) represents the vulnerability of the aircraft electronic subsystems to nuclear radiation. Based on the vulnerability of the crew and the aircraft to the nuclear radiation environments, vulnerability envelopes are constructed which define the distances of burst locations from the aircraft resulting in mission kill.

Downloaded from http://www.everyspec.com

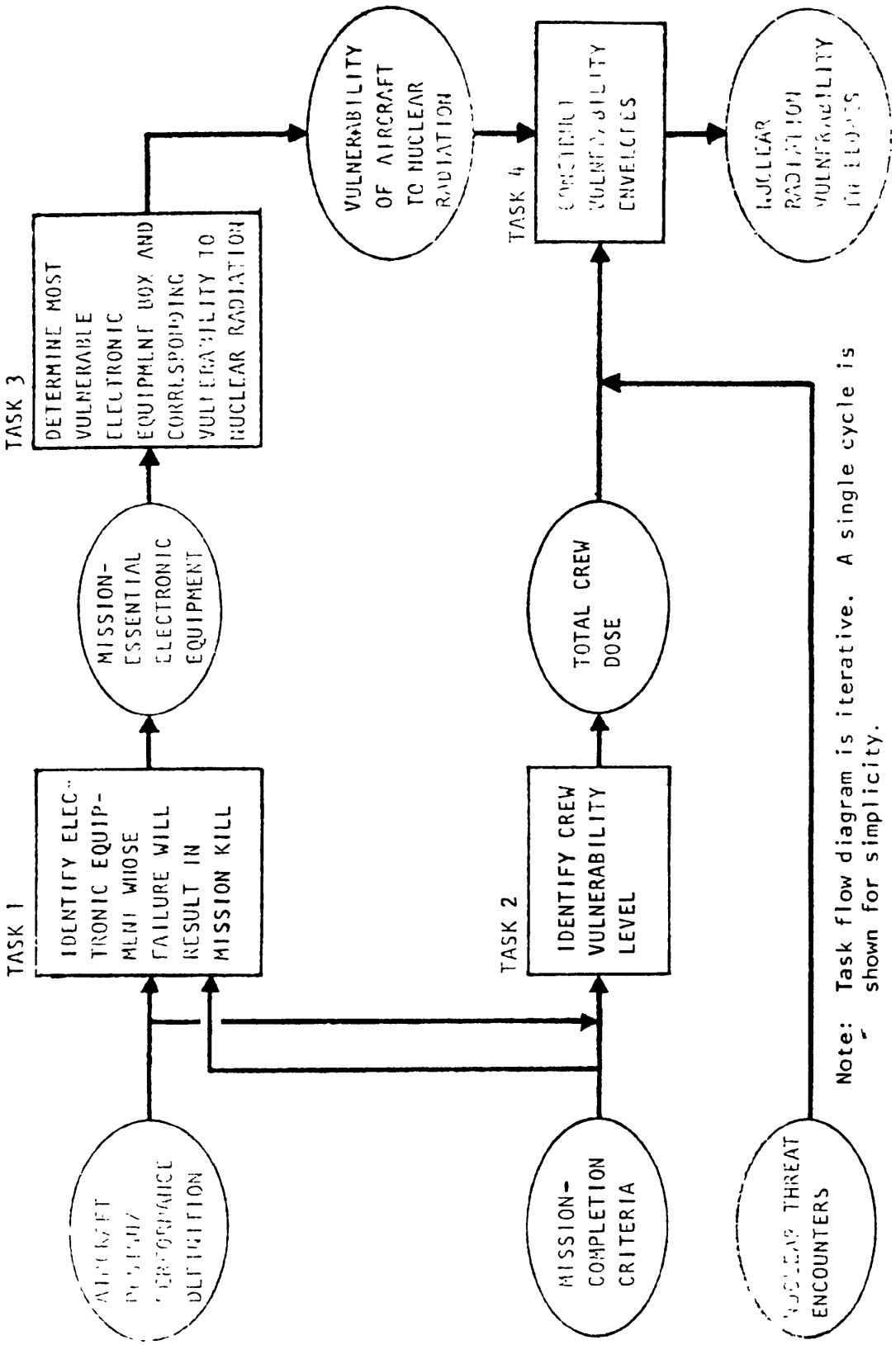

FIGURE 3. Task Flow Diagram for Conducting Nuclear Radiation Vulnerability Analysis

Downloaded from http://www.everyspec.com

9.4.3 Electromagnetic pulse. A task flow diagram for conducting an EMP vulnerability evaluation is presented in Figure 4. The final results of an EMP vulnerability evaluation are twofold:

a. To provide an assessment of the aircraft to complete its mission following exposure to the high altitude threat.
b. To generate envelopes that define the distances from the aircraft at which a surface or near-surface burst will generate EMP environments which will result in mission kill.

Mission-essential equipment which includes electrical and/or electronic components is identified under task 1, Figure 4. In task 2, the nuclear threat encounters are selected which will produce significant EMP threats. Significant EMP threats result from detonations of high yield nuclear weapons at high altitude or at (or near) the surface of the earth. The EMP environments are computed in task 3 which are associated with the nuclear threat encounters identified in task 2. EMP specialists are recommended to conduct this very complex set of calculations. The voltages and currents that are coupled into the mission-essential equipment are determined in task 4. In task 5, the equipment susceptibility to EMP-induced currents and voltages is determined and compared to the currents and/or voltages calculated in task 4. This information determines if the aircraft will survive exposure to the high altitude EMP threat. For a surface or near-surface burst, EMP vulnerability envelopes are determined by repeating tasks 3 and 4 for different aircraft-burst separation distances until the currents and voltages that couple into the equipment are the same as the equipment susceptibility. These envelopes define the distances from the aircraft at which surface or near-surface burst will result in mission kill and are compared to the vulnerability envelopes for the other weapon environments to determine the relative importance of the surface or near-surface EMP threat.

9.4.4 Trade-off studies. The primary objective of conducting nuclear weapon effects trade-off studies is to provide a data base that will:

a. Permit selection of an optimum level of hardening to each weapon effect.
b. Identify the most effective techniques and designs for hardening.
c. Establish the deltas (e.g., weight, cost, safety, main trainability, reliability, performance, schedule) associated with increasing or decreasing effort associated with each hardness level.
d. Support mission and cost-effectiveness evaluations to evaluate hardening the aircraft design as compared to various degrees of other survival enhancement techniques.

A task flow diagram for conducting nuclear weapon effects trade-off studies is depicted in Figure 5. This diagram is an expansion of the trade-off

Downloaded from http://www.everyspec.com

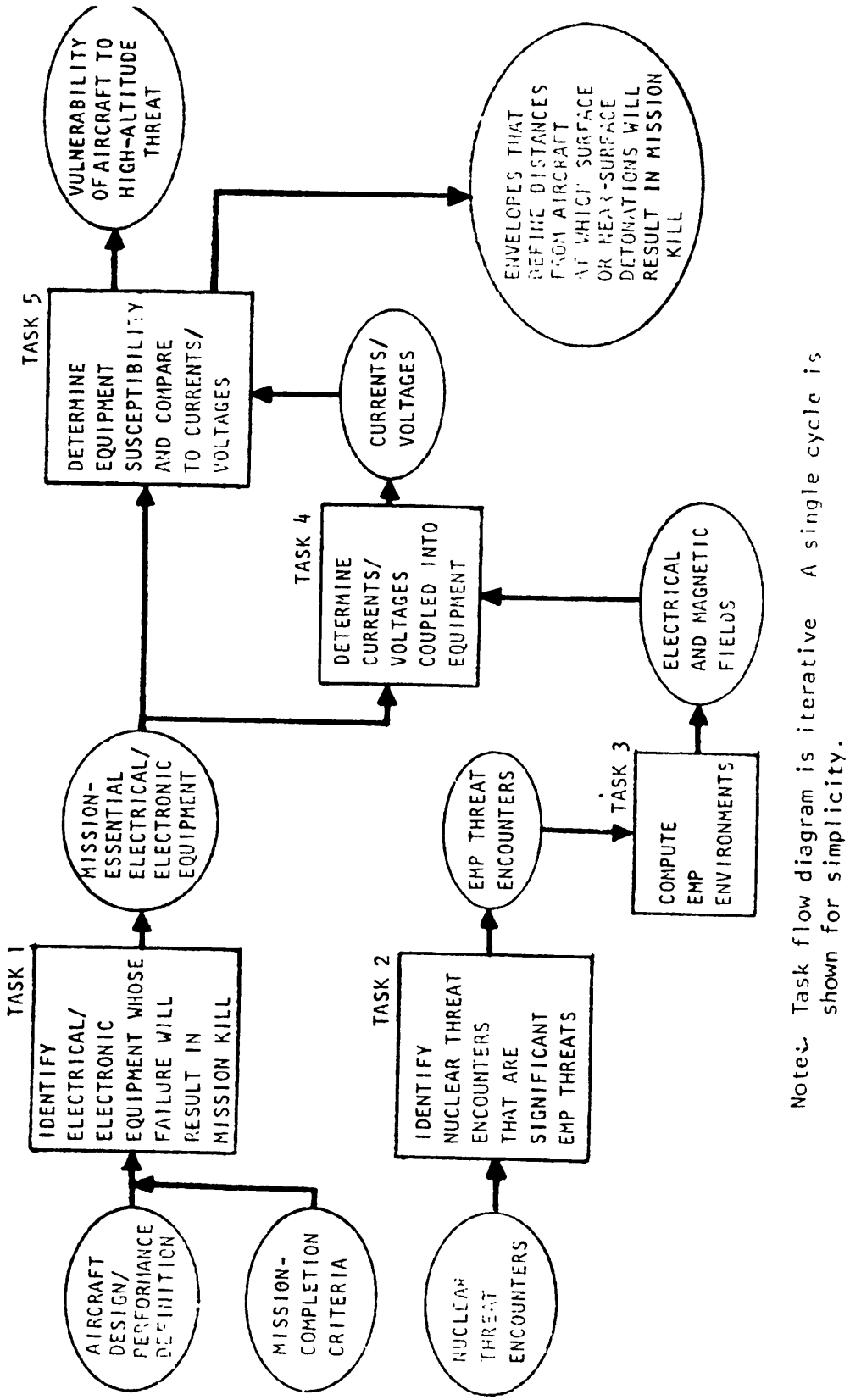

Note: Task flow diagram is iterative. A single cycle is shown for simplicity.

FIGURE 4. Task Flow Diagram for Conducting Electromagnetic Pulse Vulnerability Analysis

Downloaded from http://www.everyspec.com

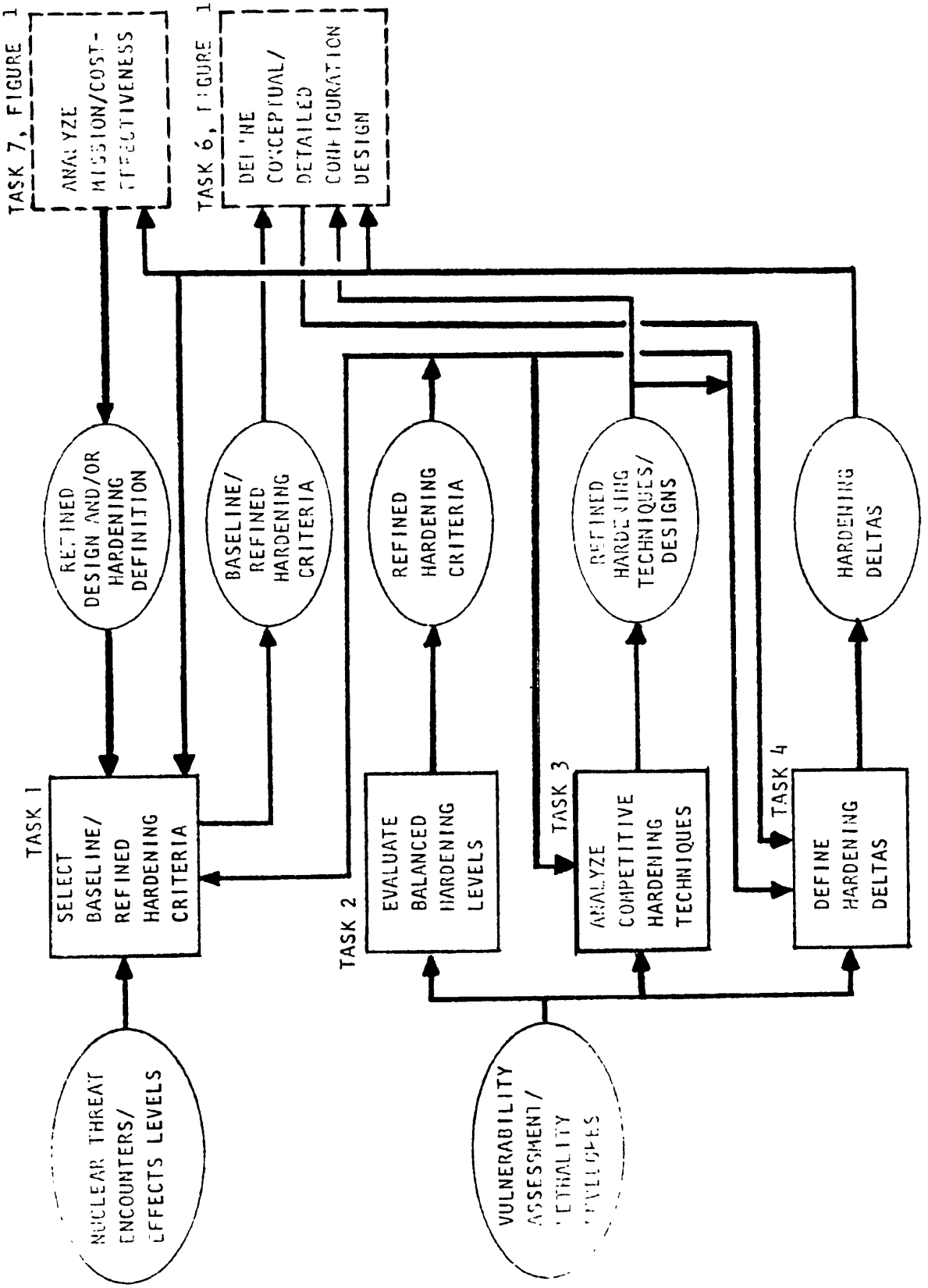

FIGURE 5. Task Flow Diagram for Conducting Nuclear Weapon Effects Trade-off studies

Downloaded from http://www.everyspec.com

study portion of Figure 1. The four major tasks shown in Figure 5 are discussed in the following subsections.

9.4.4.1 Select baseline and refine hardening criteria. This study is directed toward selecting the hardening criteria for the aircraft. During the conceptual stage of development, when the aircraft is still not well defined, the baseline hardening criteria can be selected from consideration of four factors:

a. Nuclear environment.
b. Level of radiation to which the crew can be exposed.
c. Gross penalties associated with increasing or decreasing the degree of hardening.
d. Preliminary mission and cost-effectiveness evaluations which allocate the mix and magnitude of each survival enhancement technique to be employed.

9.4.4.1.1 Nuclear environment. The nuclear environment around the aircraft can be determined from the developed scenario by considering the nuclear threat aircraft encounters occurring throughout all phases of the defined mission(s) and calculating the resultant weapon effect levels at the aircraft. This effort will provide the maximum value of each weapon effect arriving at the aircraft from all encounters.

9.4.4.1.2 Crew exposure to radiation. The level of radiation to which the crew can be exposed should also be considered in selecting the baseline hardening criteria. Since shielding the crew from radiation imposes significant weight penalties on design, the envelope for the selected crew dose level can be used as a basis for deriving a balanced set of hardening levels for the aircraft. This balance is accomplished by adjusting the hardening level of each effect until all of the lethality envelopes are approximately the same size as the envelope for crew dose.

9.4.4.1.3 Gross penalties. The third factor in establishing the baseline hardening criteria is to grossly consider the penalties associated with a variation in hardness levels.

9.4.4.1.4 Preliminary evaluations. Finally, preliminary evaluations should be conducted to determine the proper mix of survival enhancement techniques to be employed and the degree to which each should be implemented, based upon mission/cost-effectiveness considerations. In addition to establishing the level of hardening for each effect, other parameters requiring definition are the waveform for the blast and thermal pulse and the prompt and delayed dose rate for gamma rays. These data can be unique to a specific weapon, or can be a compromise of the extremes from the spectrum of various yields and weapons to be encountered. As system design becomes defined, a detailed vulnerability evaluation will provide the actual hardness of the aircraft to a specific threat, which may vary considerably from the specification requirements.

Downloaded from http://www.everyspec.com

This variance may result from inherent hardness as a result of other specification requirement(s) which produce a design exceeding that cited for vulnerability, or the variance may arise from the threat being analyzed, differing from that used in the aircraft specification. These data should be used to:

a. Evaluate balanced hardening levels (task 2, Figure 5).
b. Provide improved inputs to the mission and cost-effectiveness evaluation (task 7, Figure 1).

The results of both of these efforts should be directed toward refining the hardening criteria.

9.4.4.2 Evaluate balanced hardening levels. This trade-off study task addresses a review of the size of the lethality envelopes developed for the aircraft for each nuclear threat encounter identified previously from the scenario to determine whether the envelopes associated with any threat effect are significantly larger or smaller than the other effect envelopes. A larger or smaller envelope size would denote an underhardened or overhardened design, respectively, for a particular encounter condition. A similar comparison of envelope sizes for all encounters may then provide a basis for refining the hardening criteria. Since the aircraft's vulnerability is dependent upon weapon parameters (e.g., yield, pulse-waveforms, dose rates), nuclear effect transmission characteristics (e.g., altitude of burst, aircraft speed and altitude, fireball rise time, ground reflectance, humidity), and aircraft configuration (e.g., CG, fuel containment), the lethality envelopes for each encounter and effect may vary significantly. During the initial phases of development when the design is not well defined, the hardening levels used to develop the envelopes should be the aircraft specification values. However, as the design becomes more specific, the lethality envelopes should reflect the actual hardness achieved in the aircraft design. These data should be used to refine the mission/cost-effectiveness evaluations.

9.4.4.3 Evaluate competitive hardening techniques and designs. This trade-off study task provides for evaluations of the various competitive hardening techniques or designs to evolve the most efficient, hardened aircraft. The task encompasses all the trade-off studies conducted throughout the development of the aircraft which are directed to attainment of an efficiently hardened configuration. Since this should be a continuing procedure, it may constitute the largest category of trade- off study effort. Initially, this task involves higher order trade-off studies which may establish the hardening philosophy of the aircraft and affect the aircraft configuration. For example, evaluation may indicate that it is more efficient (i.e., in terms of weight or cost) to group mission-critical equipment and components in one section and completely shield that area to EMP rather than deploy the equipment throughout the aircraft with individual protection; or, the nuclear gust requirement may preclude a high-aspect ratio wing configuration. As design progresses, the trade-off studies become more

Downloaded from http://www.everyspec.com

directed toward engineering design solutions (e.g., the effectiveness of two-wire versus three-wire braid for shielding avionics and electrical leads from coupling the currents generated by EMP). The results of these trade-off studies continue to be reflected in the aircraft design as the better techniques and designs are identified, and, together with the associated deltas, are inputs to the mission and cost-effectiveness evaluations,

9.4.4.4 Define hardening deltas. Defining the impact (deltas) on system design of providing various levels of hardness can be achieved only by a detailed evaluation of the aircraft under development. This impact is usually expressed in terms of weight, cost, safety, maintainability, reliability, performance, and schedule. The output of task 4, Figure 5 (the hardening deltas), is provided as input data to the conceptual/detailed configuration design (task 6) and mission/cost-effectiveness evaluation (task 7).

9.4.4.5 Define conceptual and detailed configuration design. The following inputs form a basis for conducting this task:

a. Baseline/refined hardening criteria.
b. Refined hardening techniques/designs.
c. Hardening deltas.

The design hardening methodology previously discussed is applied initially to defend the conceptual configuration and later to accomplish the detailed design.

9.4.4.6 Evaluate mission and cost-effectiveness. Many of the decisions in vulnerability reduction through aircraft hardening can be made solely on the basis of the trade-off study results without going into a detailed evaluation of survivability and system effectiveness. These latter studies can provide, however, the significance of each trade-off in an overall engagement scenario. The output of an engagement simulation should provide:

a. Recommendations and alterantives regarding optimum survivable design.
b. Sensitivity of variations from the optimum design for each survival enhancement technique.
c. A priority listing for survivability enhancement features.

9.5 Nuclear-nonnuclear hardening impacts. Since most aircraft are generally designed primarily to operate and survive in nonnuclear warfare, a great number of an aircraft’s design features have ballistic protection considerations or other means to minimize the probability of detection and tracking by hostile weapon sytems. The impact of nuclear hardening on these survivability enhancement features must be carefully considered. Very little or no degradation of the nonnuclear protection features can ordinarily be

Downloaded from http://www.everyspec.com

tolerated. Higher loss rates could be anticipated for limited war operations with reduced protection. A general statement of the basic impact of nonnuclear survivability enhancement methods on nuclear hardening methods as a function of nuclear threat mechanism is summarized in Table I. These general impact statements and information are provided only as a guide; the actual impacts and their quantitative measures will depend upon the specific nuclear and nonnuclear survivability enhancement techniques employed on the aircraft and the mission of the aircraft. Such impact considerations will allow for achievement of a desirable balance between nuclear and nonnuclear survivability.

9.5.1 Nuclear blast protection. For nuclear blast protection, there will be little impact on nonnuclear protection methods. Some minor benefit to structural damage tolerance may be gained from any addition to reserve strength of panels and main load-carrying members.

9.5.2 TREE and EMP protection. TREE and EMP protection of flight and mission-essential electrical/avionic equipment can be expected to have some benefit in terms of higher reliability. This can affect systems for fire/explosion suppression, leakage suppression/control, delayed failure, and electronic countermeasures. Hardening equipment for protection against nonnuclear threats must receive careful consideration to determine if it would be an effective and practical choice for the expected operations following exposure of the system to nuclear environments.

9.5.3 Thermal radiation protection. Providing thermal radiation protection by increasing the reflectivity of the aircraft exterior to minimize the amount of thermal energy absorbed will increase the possibility of visual detection. Methods used to minimize visual sighting of aircraft include:

a. Finishes that minimize or subdue reflective surfaces.
b. Avoidance of glossy paints.
c. Use of camouflage colors and patterns to minimize contrast with the terrain.

For low nuclear thermal radiation levels, there would be little if any impact upon features to minimize visual detection.

9.5.4 IR reduction. For IR signature reduction, design features may include minimizing transparent areas and avoidance of curved sections, masking hot engine components, use of special structural coatings and finishes to minimize emissions, and insulation and/or shielding of other heat sources (e.g., oil coolers, engine exhaust stacks, hot gun sections). As in the case for visual detectability, there should be little or no impact impact for low levels of nuclear thermal radiation protection, For higher levels of thermal protection, some degradation of IR finishes could be realized. Depending upon the size and operational strength requirements

Downloaded from http://www.everyspec.com

TABLE I. SUMMARY: Impact of Nonnuclear Survivability Enhancement Methods on Nuclear Hardening

Downloaded from http://www.everyspec.com

TABLE I. SUMMARY: Impact of Nonnuclear Survivability Enhancement Methods on Nuclear Hardening (cont'd)

Downloaded from http://www.everyspec.com

of noncurved transparencies, some increase in weight and cost could be imposed by nuclear blast load requirements. Such impacts would be small in relation to overall penalties for the total airframe for higher levels of nuclear blast protection.

9.5.5 Radar cross section reduction. For radar cross section (RCS) reduction, a number of techniques can be employed, including structural shaping, use of radar-absorbing materials, use of transparent metallic film on transparencies (such as canopies, windscreens, windows), radar camouflaged antennas, and egg-crate treatment of engine inlets. There would be little or no impact from nuclear hardening requirements for the levels presently being considered. For higher thermal radiation levels, higher temperature bonding materials might be required for some radar- absorbing material concepts and result in slight cost increases. Nuclear blast hardening of structures could influence the-cross section shape of the fuselage, depending upon the level required. A cylindrical cross section would be a better structural shape for reducing radar signature than a rectangular shape. It would be less effective, however, than an elliptical shape. The use of metal lized coatings on transparencies would provide a benefit to EMP hardening requirements. No impact to RCS features would be imposed by the radiation and EMP hardening techniques.

9.5.6 Acoustic noise reduction. Aural signature (noise) reduction techniques include methods to minimize emissions from propellers or rotors, engine rotation or exhaust, aerodynamic flow, transmissions, shafting, gearboxes, airframe panel vibration, and auxiliary power supplies. Nuclear hardening would have no appreciable impact on these techniques, since they are for the most part mechanical and in areas where significant intrinsic hardness to nuclear weapon effects exists.

9.6 Hardness assurance. Over the lifetime of the system, hardness assurance (HA) could be the most costly element of a system nuclear survivability enhancement program. HA is defined to be those tasks necessary to insure that the initial design hardness is not degraded over the system life and is composed of three elements:

a. Hardness compliance (HC) includes those tasks necessary to insure that the initial hardness is not degraded during production.
b. Hardness maintenance (HM) includes those tasks necessary to insure that the initial hardness is not degraded during the operational phase.
c. Hardness surveillance (HS) includes those tasks during the operational phase to verify that hardness is being main tained.

HC is primarily a contractor task, while HM and HS are the customer’s responsibility. Because of the importance of a sound, yet cost- effective, HA program, HA considerations should be an integral part of the initial phases

Downloaded from http://www.everyspec.com

of a system acquisition process. Ideally, studies would be performed in the conceptual phase to determine the optimum approach to achieving and maintaining hardness. These studies could consider the practice of overdesign which could result in a minimal HA program, but could result in extra effort in the design phase. Other considerations which could impact the hardening approach and HA could be the overall system approach. For example, digital systems could be quite susceptible to logic upset (i.e., memory scrambling, change of state of logic, data signal train disruption). However, if the general system approach reduces system susceptibility to spurious signals of any type, hardening to the gamma rate environments and subsequent HA could be much simpler. Another example may be the derating of piece parts caused by reliability and environmental (operation in intense cold) considerations. In many cases, these deratings may contribute to the neutron fluence hardening effort, which relies heavily on derating. HA should also be considered during the evaluation to select hardness criteria (along with the numerous other factors; i.e., threat, costs, state of the art in hardening technology, system mission, crew limitations). The result of these initial efforts should be an approach which would be applied during the design phase. A specific part of the approach might be the designation of quantitative design margins for various nuclear environments (e.g., neutron fluence). Guidance should also be provided in obtaining the necessary hardness to blast, thermal, EMP, in an optimum manner (i.e., minimum impact on cost and design). A minimum, yet adequate, HA program generally would result from such an approach. HA guidelines for neutron effects can be found in Survivability Design Guide for U.S. Army Aircraft Nuclear Hardening, U.S. Army Air Mobility Research and Development Laboratory; HA guidelines for EMP effects can be found in EMP (Electromagnetic Pulse) Handbook, General Electric Company -TEMPO, DNA. HA guidelines for the other threat effects are not currently available; however, the guidelines available for neutron effects and EMP can provide insights into the formulation of other guidelines.

Downloaded from http://www.everyspec.com

10. SUPPLEMENTAL CONSIDERATIONS

Considerations which are germane to aircraft availability and survivability but which are not directly related to the aircraft are identified in the following subsections. In general, all exposed support and ancillary equipment required for operation of aircraft should be hardened to aircraft levels. To have surviving aircraft not be operable due to support or ancillary equipment inoperability caused by threat effects would be undesirable.

10.1 External stores. The determination of the vulnerability of external aircraft stores should be part of the overall evaluation of aircraft survivability. Store vulnerability can affect aircraft survivability because of the proximity of the store to the aircraft, physical connection to the store, and possible synergistic effects on the aircraft caused by interaction of the store and a nuclear weapon threat mechanism. Even though external stores may not be obviously damaged, their effectiveness may be reduced because of threat effects on guidance accuracy, tracking capability, fuze operation, control capability, or release of the store. If release of stores is inhibited by threat effects, further complications can arise if the store is one which is not allowed on the aircraft during carrier landing. The same design and evaluation guidelines previously discussed are applicable to treatment of external stores.

10.2 Aircraft handling and support equipment. Since the operation of carrier-based aircraft and their movement on the carrier flight and hangar decks is dependent, respectively, upon specialized support and deck-handling equipments, the vulnerability and survivability of these equipments should be a major concern. It should be determined whether such equipments are to be evaluated under the auspices of aircraft or carrier vulnerability programs; however, they should be examined and considered for their effect upon total aircraft MEWS survivability/ operability. Most of the design and evaluation guidelines previously discussed are applicable to aircraft handling and support equipment.

10.3 Extra aircraft effects. Consideration should be given to extra aircraft nuclear weapons effects such as communications blackout or interruption and their effects upon carrier landing of aircraft, coordination of carrier airspaces, and coordination of offensive and defensive air assets. All air assets in the following general warfare areas should be considered:

a. STW - Strike Warfare.
b. AAW - Air-to-Air Warfare.
c. ASW - Antisubmarine Warfare.

Preparing activity:
Navy - AS

(Project No. 15GP-N046)

U S GOVERNMENT PRINTING OFFICE 1984—705-040/A0698

Downloaded from http://www.everyspec.com

STRUCTIONS: In a continuing effort to make our standardization documents better, the DoD provides this form for use in mitting comments and suggestions for improvements All users of military standardization documents are invited to provide ggestions. This form may be detached, folded along the lines indicated, taped along the loose edge *(DO NOT STAPLE)*, and mailed. In block 5, be as specific as possible about particular problem areas such as wording which required interpretation, wa too rigid, restrictive, loose, ambiguous, or was incompatible, and give proposed wording changes which would alleviate the problems Enter in block 6 any remarks not related to a specific paragraph of the document If block 7 is filled out, an acknowledgement will be mailed to you within 30 days to let you know that your comments were received and are being considered

NOTE This form may not be used to request copies of documents, nor to request waivers, deviations, or clarification of specification requirements on current contracts Comments submitted on this form do not constitute or imply authorization to waive any portion of the referenced document(s) or to amend contractual requirements

(Fold along this line)

(Fold along this line)

DEPARTMENT OF THE NAVY
Commanding Officer
Naval Air Engineering Center
Engineering Specifications and Standards Department
(ESSD), Code 93
Lakehurst, NJ 08733

OFFICIAL BUSINESS
PENALTY FOR PRIVATE USE $300

NO POSTAGE NECESSARY IF MAILED IN THE UNITED STATES

BUSINESS REPLY MAIL
FIRST CLASS PERMIT NO 12503 WASHINGTON D C

POSTAGE WILL BE PAID BY THE DEPARTMENT OF THE NAVY

Commanding Officer
Naval Air Engineering Center
Engineering Specifications and Standards Dept.
(ESSD), Code 93
Lakehurst, NJ 08733

Downloaded from http://www.everyspec.com

STANDARDIZATION DOCUMENT IMPROVEMENT PROPOSAL

(See Instructions - Reverse Side)

1 DOCUMENT NUMBER
MIL-HDBK-273

2 DOCUMENT TITLE Survivability Enhancement, Aircraft, Nuclear Weapon Threat, Design & Evaluation Guidelines

3a. NAME OF SUBMITTING ORGANIZATION

b. ADDRESS *(Street, City, State, ZIP Code)*

4 TYPE OF ORGANIZATION *(Mark one)*

- ☐ VENDOR
- ☐ USER
- ☐ MANUFACTURER
- ☐ OTHER *(Specify)* _____

5 PROBLEM AREAS

a. Paragraph Number and Wording

b. Recommended Wording

c. Reason/Rationale for Recommendation

6 REMARKS

7a. NAME OF SUBMITTER *(Last, First, MI)* – Optional

b. WORK TELEPHONE NUMBER *(Include Area Code)* – Optional

c. MAILING ADDRESS *(Street, City, State, ZIP Code)* – Optional

8 DATE OF SUBMISSION *(YYMMDD)*

DD FORM 82 MAR 1426

PREVIOUS EDITION IS OBSOLETE

Downloaded from http://www.everyspec.com

NOTICE OF CHANGE

INCH-POUND

MIL-HDBK-273(AS)
NOTICE 1
1 December 1995

MILITARY HANDBOOK

SURVIVABILITY ENHANCEMENT, AIRCRAFT
NUCLEAR WEAPON THREAT,
DESIGN AND EVALUATION GUIDELINES

TO ALL HOLDERS OF MIL-HDBK-273(AS):

1. THE FOLLOWING PAGES OF MIL-HDBK-273(AS) HAVE BEEN REVISED AND SUPERSEDE THE PAGES LISTED:

NEW PAGE	DATE	SUPERSEDED PAGE	DATE
57	1 December 1995	57	30 December 1983
58	30 December 1983	58	REPRINTED WITHOUT CHANGE

2. RETAIN THIS NOTICE AND INSERT BEFORE TABLE OF CONTENTS.

3. Holders of MIL-HDBK-273(AS) will verify that page changes and additions indicated above have been entered. This notice page will be retained as a check sheet. This issuance, together with appended pages, is a separate publication. Each notice is to be retained by stocking points until the military handbook is completely revised or cancelled.

Preparing activity:
Navy - AS

(Project 15GP-N113)

AMSC N/A FSC 15GP

DISTRIBUTION STATEMENT A. Approved for public release; distribution is unlimited.

Downloaded from http://www.everyspec.com

NOTICE: Paragraph 7.1.11 recommends the use of bromotrifluoromethane, CF_3Br, an ozone depleting substance, for this application. Based on the appropriate Technical Representative's assessment, it has been determined that a suitable substitute is not currently available. The use of bromotrifluoromethane, CF_3Br, is permitted pending approval from the Senior Acquisition Official for each acquisition.

Downloaded from http://www.everyspec.com

Subj: PROPOSED NOTICE 1 TO MIL-HDBK-273(AS), "SURVIVABILITY ENHANCEMENT, AIRCRAFT, NUCLEAR WEAPON THREAT, DESIGN AND EVALUATION GUIDELINES", FOR GUIDANCE ON CLASS 1 OZONE DEPLETING SUBSTANCES (ODS)

Distribution:

Commanding Officer
Naval Air Warfare Center Aircraft Division
Code 4.3.5.2 (P. Lubiejewski)
P.O. Box 5152
Warminster, PA 18974-5091

Commander
Naval Air Systems Command
AIR-4.1.4.1 (David Throckmorton)
1421 Jefferson Davis Highway
Arlington, VA 22243-5110

Downloaded from http://www.everyspec.com

Supersedes page 57 of 30 December 1983.

REPRINTED WITHOUT CHANGE.