Downloaded from http://www.everyspec.com

INCH-POUND
MIL-HDBK-204A(AR)
30 November 1990

MILITARY HANDBOOK

DESIGN OF INSPECTION EQUIPMENT FOR DIMENSIONAL CHARACTERISTICS

AMSC N/A

FSC 5220

DISTRIBUTION STATEMENT A. Approved for public release; distribution is unlimited.

Downloaded from http://www.everyspec.com

FOREWORD

1. This military handbook is approved for use by all Activities and Agencies of the Department of the Army and is available for use by all Departments and Agencies of the Department of Defense.

2. Beneficial comments (recommendations, additions, deletions) and any pertinent data that may be of use in improving this document should be addressed to: Commander, US Army Armament Research, Development, and Engineering Center, ATTN: SMCAR-BAC-S, Picatinny Arsenal, NJ 07806-5000, by using the self-addressed Standardization Document Improvement Proposal (DD Form 1426) appearing at the end of this document or by letter.

3. This handbook was developed under the auspices of the US Army Materiel Command's Engineering Design Handbook Program, which is under the direction of the US Army Management Engineering College. This handbook was written by the Research Triangle Institute under Contract No. DAAA08-80-C-0247.

Downloaded from http://www.everyspec.com

CONTENTS

Paragraph *Page*
FOREWORD ii
LIST OF ILLUSTRATIONS xiii
LIST OF TABLES xviii
LIST OF ABBREVIATIONS AND ACRONYMS xix

CHAPTER 1
INTRODUCTION

1.1 PURPOSE AND SCOPE 1-1
1.2 PRODUCT ASSURANCE 1-1
1.3 CONFIGURATION MANAGEMENT 1-1
1.4 GENERAL DRAWING STANDARDS 1-2
1.5 UNITS 1-2
1.6 KEY DEFINITIONS 1-2
1.7 RELATED DOCUMENTS 1-2
1.7.1 MILITARY 1-2
1.7.2 MILITARY ADOPTED 1-4
REFERENCES 1-5

CHAPTER 2
ELEMENTS OF INSPECTION EQUIPMENT SELECTION AND DESIGN

2.1 INTRODUCTION 2-1
2.2 ANALYSIS OF REQUIREMENTS 2-1
2.2.1 TYPES OF INSPECTION REQUIREMENTS 2-2
2.2.1.1 Size 2-2
2.2.1.2 Form 2-2
2.2.1.3 Orientation 2-2
2.2.1.4 Profile 2-2
2.2.1.5 Location 2-2
2.2.1.6 Runout 2-3
2.2.1.7 Projected Tolerance Zone 2-3
2.2.2 SOURCES OF PARAMETERS TO BE INSPECTED 2-3
2.3 SELECTION OF INSPECTION EQUIPMENT 2-5
2.3.1 PHYSICAL CONSIDERATIONS 2-8
2.3.1.1 Part Geometry 2-8
2.3.1.2 Part Size and Complexity 2-8
2.3.1.3 Location of Inspection Station 2-8
2.3.1.4 Type of Construction 2-10
2.3.1.5 Other Physical Considerations 2-10
2.3.2 ECONOMIC CONSIDERATIONS 2-10

Downloaded from http://www.everyspec.com

CONTENTS (cont'd)

Paragraph *Page*

2.3.2.1 Quantity of Parts to Be Inspected 2-10
2.3.2.2 Time Required for Inspection 2-18
2.3.2.3 Useful Life of Inspection Equipment 2-18
2.3.2.4 Percentage and Costs of Errors 2-18
2.3.2.5 Effect of Engineering Changes 2-18
2.3.2.6 Availability of Commercial Inspection Equipment 2-19
2.4 DESIGN PHILOSOPHY AND POLICY 2-19
2.4.1 FUNDAMENTAL RULES OF DESIGN 2-19
2.4.1.1 Principles of Product Design That Affect Gage Design 2-19
2.4.1.2 Principles of Gage Design 2-20
2.4.2 MINIMIZATION OF REQUIRED SKILL AND EFFORT 2-20
2.4.3 MINIMIZATION OF EQUIPMENT SOPHISTICATION 2-21
2.4.4 DESIGN OF INSPECTION EQUIPMENT FOR REGARDLESS OF FEATURE SIZE (RFS) TOLERANCES 2-21
2.4.5 DESIGN OF INSPECTION EQUIPMENT FOR MAXIMUM MATERIAL CONDITION (MMC) TOLERANCES 2-21
2.4.6 DESIGN OF INSPECTION EQUIPMENT FOR LEAST MATERIAL CONDITION (LMC) TOLERANCES 2-22
2.5 DESIGN AND SPECIFICATION OF INSPECTION EQUIPMENT 2-23
2.5.1 SELECTION OF MATERIAL 2-23
2.5.1.1 Wear Resistance 2-23
2.5.1.2 Useful Life 2-23
2.5.1.3 Thermal Compatibility 2-23
2.5.1.4 Weight 2-24
2.5.1.5 Cost 2-24
2.5.1.6 Availability 2-24
2.5.2 PROTECTION OF MATERIAL 2-24
2.5.2.1 Corrosion Prevention 2-24
2.5.2.2 Plating 2-24
2.5.3 HEAT TREATMENT AND ALLOYING 2-25
2.5.3.1 Annealing and Stress Relieving 2-25
2.5.3.2 Hardening 2-27
2.5.3.3 Tempering 2-28
2.5.3.4 Stabilization 2-28
2.5.3.5 Alloying 2-28
2.5.4 TOLERANCES AND WEAR ALLOWANCES 2-28
2.5.4.1 General Rules 2-29
2.5.4.2 Tolerance Tables 2-30
2.5.5 SPECIFICATION OF INSPECTION EQUIPMENT 2-30
2.5.6 CALIBRATION CONSIDERATIONS 2-32
2.5.7 SAFETY CONSIDERATIONS 2-33
2.5.7.1 Explosion-Proof Designs 2-33
2.5.7.2 Remote Monitoring Facility 2-33
2.5.7.3 Static Electricity-Free Designs 2-33
2.5.7.4 Adequate Grounding 2-33
2.5.7.5 Sharp Edges and Pinch Points 2-33
2.5.7.6 Inspection Equipment Weight Considerations 2-33
REFERENCES 2-34
BIBLIOGRAPHY 2-34

Downloaded from http://www.everyspec.com

CONTENTS (cont'd)

CHAPTER 3
STANDARD MEASURING EQUIPMENT (SME)

Paragraph *Page*
3.1 INTRODUCTION 3-1
3.2 MEASURING INSTRUMENTS 3-1
3.2.1 STEEL RULES 3-1
3.2.2 PROTRACTORS 3-2
3.2.3 COMBINATION SQUARES 3-2
3.2.4 MICROMETERS 3-5
3.2.5 VERNIER CALIPERS 3-7
3.2.6 FEELER GAGES 3-7
3.3 TRANSFERRING DEVICES 3-7
3.3.1 CALIPERS 3-8
3.3.2 DIVIDERS 3-9
3.3.3 BEAM TRAMMELS 3-11
3.3.4 SPLIT SPHERE AND TELESCOPING GAGES 3-11
3.4 SURFACE PLATES AND ACCESSORIES 3-13
3.4.1 SURFACE PLATES 3-13
3.4.2 GAGE BLOCKS 3-15
3.4.3 HEIGHT GAGES 3-16
3.4.4 PARALLELS 3-19
3.4.5 ANGLE BLOCKS 3-19
3.4.6 V BLOCKS 3-22
3.4.7 SQUARES 3-26
3.4.8 STRAIGHTEDGES 3-30
3.4.9 SINE BARS 3-30
3.4.10 PLANER GAGES 3-30
3.4.11 DIAL INDICATORS 3-33
3.5 COORDINATE MEASURING MACHINES 3-33
3.5.1 COORDINATE MEASURING MACHINES EQUIPPED WITH DIAL INDICATORS 3-35
3.5.2 COORDINATE MEASURING MACHINES WITH OPTICAL COMPARATORS 3-35
3.5.3 COORDINATE MEASURING MACHINES EQUIPPED WITH ELECTRONIC MEASUREMENT AND DIGITAL READOUT 3-35
3.5.3 COORDINATE MEASURING MACHINES WITH AUTOMATIC PRINTOUT 3-35
3.5.5 COORDINATE MEASURING MACHINES WITH COMPUTERS 3-37
3.5.6 UNIVERSAL MEASURING MACHINES 3-37
3-6 OPEN SETUPS 3-37
3.6.1 PARALLELISM 3-40
3.6.2 PERPENDICULARITY 3-41
3.6.3 RUNOUT 3-42
3.6.4 TRUE POSITION 3-43
3.6.5 LOCATION 3-44
3.6.6 USE OF WIRES IN MEASURING PITCH DIAMETER OF SCREW THREADS 3-45
REFERENCES 3-47
BIBLIOGRAPHY 3-47

CHAPTER 4
OTHER MEASURING EQUIPMENT

4.1 INTRODUCTION 4-1
4.2 OPTICAL EQUIPMENT 4-1

Downloaded from http://www.everyspec.com

CONTENTS (cont'd)

CHAPTER 4
OTHER MEASURING EQUIPMENT

Paragraph *Page*

4.2.1 OPTICAL INSPECTION INSTRUMENTS 4-2
4.2.1.1 Toolmaker's Microscope 4-2
4.2.1.2 Optical Comparator 4-4
4.2.1.3 Optical Flat 4-8
4.2.2 MANUAL ALIGNMENT INSTRUMENTS 4-10
4.2.2.1 Autocollimator 4-10
4.2.2.2 Alignment Telescope 4-11
4.2.2.3 Theodolite 4-11
4.2.2.4 Sight Level 4-13
4.2.2.5 Alignment Transit 4-13
4.2.2.6 Accessories 4-15
4.2.3 AUTOMATIC AND PHOTOELECTRIC ALIGNMENT INSTRUMENTS 4-25
4.2.3.1 Automatic Autocollimator 4-25
4.2.3.2 Automatic Alignment Telescope 4-26
4.2.3.3 Automatic Alignment Polarimeter 4-27
4.2.3.4 Autocollimator Plus Alignment Polarimeter 4-27
4.2.3.5 Laser Range Finder 4-28
4.2.3.6 Automatic Optical Probe 4-29
4.2.3.7 Laser Alignment System 4-30
4.2.4 INTERFEROMETRIC METROLOGY INSTRUMENTS 4-30
4.2.5 ELECTRO-OPTICAL INSTRUMENTS 4-34
4.2.5.1 Fiber-Optic Probe 4-34
4.2.5.2 Photodiode Array 4-36
4.2.5.3 Image Dissector 4-36
4.2.5.4 Scanning Laser Beams 4-37
4.3 PNEUMATIC GAGING EQUIPMENT 4-40
4.4 INDIRECT MEASURING EQUIPMENT 4-43
4.4.1 EDDY CURRENT 4-43
4.4.2 ULTRASONIC 4-43
4.4.3 PENETRATING RADIATION 4-44
4.4.4 MAGNETIC FIELD 4-44
4.4.5 ELECTRIC CURRENT 4-44
REFERENCES 4-44
BIBLIOGRAPHY 4-45

CHAPTER 5
SPECIAL MEASURING APPLICATIONS

5.1 INTRODUCTION 5-2
5.2 OPTICAL ELEMENTS AND SYSTEMS 5-2
5.2.1 FOCAL LENGTH 5-2
5.2.2 RADIUS OF CURVATURE 5-5
5.2.2.1 Template 5-6
5.2.2.2 Microscope and Lens Bench 5-6
5.2.2.3 Spherometer 5-6
5.2.2.4 Test Glass 5-8
5.2.2.5 Autocollimator and Interferometer 5-11

Downloaded from http://www.everyspec.com

CONTENTS (cont'd)

Paragraph *Page*
5.2.2.6 Interferometer 5-11
5.2.3 THICKNESS 5-13
5.2.4 ANGLES 5-13
5.2.4.1 Divided Circles 5-13
5.2.4.2 Comparison Standards 5-14
5.2.5 OPTICAL COATING THICKNESS 5-15
5.2.6 SURFACE QUALITY 5-19
5.3 SOFT MATERIAL 5-19
5.3.1 ELASTOMERIC MATERIALS 5-19
5.3.2 FABRIC 5-19
5.3.2.1 Thickness 5-19
5.3.2.2 Woven Fabric Length and Width 5-20
5.3.3 PAPER 5-21
5.3.4 THREADS 5-21
5.3.4.1 Projection Method 5-21
5.3.4.2 Eberhardt Fine Thread Measurement Method 5-22
5.4 SURFACE TEXTURE 5-22
5.5 COATING THICKNESS 5-25
5.5.1 COULOMETRIC METHOD 5-25
5.5.2 CROSS-SECTIONAL METHOD 5-25
5.5.3 MAGNETIC METHODS 5-26
5.5.4 BETA BACKSCATTER 5-26
5.5.5 X-RAY SPECTROMETRY 5-26
REFERENCES 5-27

CHAPTER 6
MEASUREMENTS FOR INTERRUPTED DIAMETERS

6.1 INTRODUCTION 6-1
6.2 GEARS 6-2
6.2.1 RUNOUT 6-4
6.2.1.1 Runout Measuring Methods 6-4
6.2.1.2 Recommended Methods of Inspection 6-8
6.2.2 PITCH VARIATION, SPACING, AND INDEX 6-9
6.2.2.1 Measuring Methods for Tooth Spacing 6-9
6.2.2.2 Measuring Methods for Index 6-13
6.2.2.3 Recommended Methods of Inspection 6-17
6.2.3 PROFILE VARIATION 6-17
6.2.3.1 Measuring Methods 6-17
6.2.3.2 Interpretation of Results 6-19
6.2.3.3 Recommended Methods of Inspection 6-21
6.2.4 LEAD VARIATION 6-21
6.2.4.1 Measuring Methods 6-21
6.2.4.2 Recommended Methods of Inspection 6-24
6.2.4.3 Analysis of Gear Tooth Charts 6-24
6.2.5 COMPOSITE ACTION METHOD OF GEAR INSPECTION 6-29
6.2.5.1 Measurement of Tooth-to-Tooth Composite Variation 6-29
6.2.5.2 Measurement of Total Composite Error 6-30
6.2.5.3 Measuring Functional Tooth Thickness 6-30
6.2.6 SINGLE-FLANK TESTING 6-31

Downloaded from http://www.everyspec.com

CONTENTS (cont'd)

Paragraph *Page*
6.2.7 TOOTH THICKNESS VARIATION 6-32
6.2.7.1 Methods of Measurement 6-32
6.2.7.2 Recommended Methods of Inspection 6-35
6.2.8 TOOTH CONTACT PATTERN 6-36
6.2.8.1 Spur, Helical, and Herringbone Gears 6-36
6.2.8.2 Bevel and Hypoid Gears 6-36
6.2.9 BACKLASH VARIATION 6-36
6.2.9.1 Definition and Types 6-36
6.2.9.2 Measuring Methods for Backlash Variation 6-37
REFERENCES 6-38
BIBLIOGRAPHY 6-38

CHAPTER 7
BASIC GAGES

7.1 INTRODUCTION 7-1
7.2 PLUG GAGES 7-2
7.2.1 TYPES 7-2
7.2.1.1 Standard Plug Gages 7-2
7.2.1.2 Special Plug Gages 7-5
7.2.2 DESIGN OF A PLUG GAGE 7-7
7.2.3 EXAMPLE OF PLUG GAGE DESIGN 7-14
7.2.3.1 Requirement 7-14
7.2.3.2 Solution 7-14
7.3 RING GAGES 7-16
7.3.1 TYPES 7-16
7.3.1.1 Standard Ring Gages 7-16
7.3.1.2 Special Ring Gages 7-17
7.3.2 DESIGN OF A RING GAGE 7-18
7.3.3 EXAMPLE OF RING GAGE DESIGN 7-19
7.3.3.1 Requirement 7-19
7.3.3.2 Solution 7-19
7.4 SNAP GAGES 7-20
7.4.1 TYPES 7-20
7.4.1.1 Fixed (Nonadjustable) Snap Gages 7-22
7.4.1.2 Plain Adjustable Snap Gages 7-22
7.4.1.3 Built-Up Snap Gages 7-23
7.4.1.4 Special Snap Gages 7-25
7.4.2 DESIGN OF A SNAP GAGE 7-25
7.4.3 EXAMPLE OF ADJUSTABLE SNAP GAGE DESIGN 7-26
7.4.3.1 Requirement 7-26
7.4.3.2 Solution 7-26
7.5 FLUSH PIN GAGES 7-28
7.5.1 TYPES 7-30
7.5.1.1 Standard Flush Pin Gages 7-30
7.5.1.2 Special Flush Pin Gages 7-32
7.5.2 DESIGN OF A FLUSH PIN GAGE 7-34
7.5.2.1 General Design Procedure 7-34
7.5.2.2 Design Criteria for Special Flush Pin Gages 7-35
7.5.3 EXAMPLE OF FLUSH PIN GAGE DESIGN 7-35

Downloaded from http://www.everyspec.com

CONTENTS (cont'd)

Paragraph *Page*
7.5.3.1 Requirement 7-35
7.5.3.2 Solution 7-35
7.6 TEMPLATE GAGES 7-39
7.6.1 TYPES 7-39
7.6.1.1 Template Gages for Depths, Lengths, and Widths 7-39
7.6.1.2 Template Gages for Profiles 7-39
7.6.2 DESIGN OF A TEMPLATE GAGE 7-39
7.6.3 EXAMPLE OF TEMPLATE GAGE DESIGN 7-42
7.6.3.1 Requirement 7-42
7.6.3.2 Solution 7-42
7.7 TRUE POSITION GAGE 7-43
7.7.1 PROGRESSIVE (COAXIAL) PLUG GAGES 7-44
7.7.1.1 Design of Progressive (Coaxial) Plug Gages 7-44
7.7.1.2 Example of Progressive (Coaxial) Plug Gage Design 7-45
7.7.1.2.1 Requirement 7-45
7.7.1.2.2 Solution 7-46
7.7.2 RECEIVER GAGES 7-47
7.7.2.1 Design of a Receiver Gage 7-47
7.7.2.2 Example of Receiver Gage Design 7-49
7.7.2.2.1 Requirement 7-49
7.7.2.2.2 Solution 7-50
7.7.3 SPANNER GAGES 7-52
7.7.3.1 Types 7-52
7.7.3.2 Design of a Spanner Gage 7-52
7.7.3.3 Example of Spanner Gage Design (Two-Pin Gage for Feature Relation Gaging) 7-54
7.7.3.3.1 Requirement 7-54
7.7.3.3.2 Solution 7-55
7.7.3.4 Example of Spanner Gage Design (Multiple-Pin Gage for Feature Relation and Location Gaging) 7-55
7.7.3.4.1 Requirement 7-55
7.7.3.4.2 Solution 7-57
7.7.3.5 Example of an MMC Special True Postion Gage Design Involving Datum Reference Frame 7-59
7.7.3.5.1 Requirement 7-59
7.7.3.5.2 Solution 7-59
7.7.4 LMC TRUE POSITION GAGES 7-61
7.7.4.1 Design of an LMC Special True Position Gage 7-61
7.7.4.2 Example of an LMC Special True Position Gage 7-61
7.7.4.2.1 Requirement 7-61
7.7.4.2.2 Solution 7-61
7.8 FIXTURE GAGES 7-64
7.8.1 INTRODUCTION 7-64
7.8.2 LOCATION 7-64
7.8.3 CLAMPING 7-64
7.8.4 SENSING AND INDICATING DEVICES 7-69
7.8.5 HARDWARE 7-69
7.8.6 DESIGN OF FIXTURE GAGES 7-69
7.8.7 EXAMPLE OF FIXTURE GAGE DESIGN 7-70
7.8.7.1 Requirement 7-70
7.8.7.2 Solution 7-70
REFERENCES 7-73
BIBLIOGRAPHY 7-73

Downloaded from http://www.everyspec.com

CONTENTS (cont'd)

CHAPTER 8
GAGES FOR INTERRUPTED DIAMETERS

Paragraph *Page*
8.1 INTRODUCTION 8-2
8.2 SCREW THREADS 8-2
8.3 SPLINES 8-2
8.3.1 SPLINE PLUG GAGES 8-5
8.3.1.1 Types 8-5
8.3.1.2 Design of Spline Plug Gage 8-6
8.3.1.3 Example of Spline Plug Gage Design 8-12
8.3.1.3.1 Requirement 8-12
8.3.1.3.2 Solution 8-13
8.3.2 SPLINE RING GAGES 8-14
8.3.2.1 Types 8-14
8.3.2.2 Design of a Spline Ring Gage 8-19
8.3.2.3 Example of Spline Ring Gage Design 8-20
8.3.2.3.1 Requirement 8-20
8.3.2.3.2 Solution 8-20
8.4 KEYWAYS 8-22
8.4.1 TYPES OF KEYSLOT GAGES 8-22
8.4.2 DESIGN OF A KEYSLOT GAGE 8-22
8.5 KNURLS 8-24
REFERENCES 8-24

CHAPTER 9
SPECIAL GAGES

9.1 INTRODUCTION 9-1
9.2 GAGES FOR WEAPON CHAMBERS 9-1
9.2.1 CHAMBER FEATURES TO BE GAGED 9-1
9.2.2 DESIGN OF GAGES FOR WEAPON CHAMBERS 9-2
9.3 ALIGNMENT GAGES 9-5
9.3.1 DESIGN OF A COMPLETE ROUND ALIGNMENT GAGE FOR SMALL ARMS AMMUNITION 9-6
9.3.2 DESIGN OF A COMPLETE ROUND ALIGNMENT GAGE FOR LARGE CALIBER AMMUNITION 9-8
9.3.3 CARTRIDGE CASE PROFILE GAGES 9-10
9.4 INTERCHANGEABILITY GAGES 9-11
9.5 MECHANICAL COMPARATORS (COMPARATOR GAGES) 9-12
9.5.1 BENCH COMPARATORS 9-12
9.5.1.1 C-Frame Bench Comparators 9-12
9.5.1.2 Plate Comparators (Plate Gages) 9-14
9.5.2 PORTABLE COMPARATORS 9-14
9.5.2.1 Portable Comparators for External Dimensions 9-15
9.5.2.2 Portable Comparators for Internal Dimensions 9-15
REFERENCES 9-16

CHAPTER 10
AUTOMATED INSPECTION EQUIPMENT

10.1 INTRODUCTION 10-1

Downloaded from http://www.everyspec.com

CONTENTS (cont'd)

Paragraph *Page*

10.1.1 AUTOMATED INSPECTION EQUIPMENT 10-1
10.1.2 COMPUTER-AIDED INSPECTION SYSTEMS 10-2
SECTION I. HARDWARE 10-2
10.2 DESIGN CONSIDERATIONS 10-2
10.2.1 "FAIL-SAFE" CAPABILITY 10-2
10.2.2 MAINTAINABILITY 10-2
10.2.2.1 Modular Design Concept 10-2
10.2.2.2 Debugging Capability 10-2
10.2.2.3 Simplicity 10-3
10.2.3 INTERFACING 10-3
10.2.4 VERIFICATION AND CALIBRATION CAPABILITY 10-3
10.2.5 SECURITY CONSIDERATIONS 10-3
10.2.6 INDEPENDENT CONTROLS 10-3
10.2.7 SYSTEM SAFETY 10-3
10.2.8 ENVIRONMENTAL CONDITIONS 10-4
10.2.9 RELIABILITY 10-4
10.2.10 TESTING PRODUCTS AT LIMITS 10-4
10.2.11 FLEXIBILITY TO CHANGE 10-4
10.2.12 SYSTEM AVAILABILITY 10-4
10.2.13 DURABILITY 10-4
10.2.14 MARKING OF PARTS 10-4
10.3 ACCEPTANCE CONSIDERATIONS 10-5
10.3.1 VENDOR DEMONSTRATION TEST 10-5
10.3.2 ACCEPTANCE TEST 10-5
10.3.3 USE OF STANDARDS 10-5
10.4 OPERATING CONSIDERATIONS 10-5
10.4.1 VERIFICATION TEST 10-5
10.4.2 CALIBRATION CAPABILITY 10-5
10.4.3 INDEPENDENT CONTROLS 10-6
10.5 MAINTENANCE CONSIDERATIONS 10-6
10.5.1 REPAIR PARTS 10-6
10.5.2 PREVENTIVE MAINTENANCE 10-6
10.5.3 CORRECTIVE MAINTENANCE 10-6
SECTION II. SOFTWARE 10-6
10.6 DESCRIPTION OF SYSTEMS 10-6
10.6.1 CONTROLLERS 10-6
10.6.2 ANALYZERS 10-7
10.6.3 DUAL SYSTEMS 10-7
10.7 SYSTEM DESIGN CONSIDERATIONS 10-7
10.7.1 ACCURACY 10-7
10.7.2 SENSITIVITY 10-8
10.7.3 HARDWARE AND SOFTWARE COMPATIBILITY 10-8
10.7.4 SELF-CALIBRATION 10-8
10.7.5 BUILT-IN TEST EQUIPMENT 10-8
10.8 SOFTWARE QUALITY ASSURANCE 10-9
10.8.1 SOFTWARE QUALITY FACTORS 10-9
10.8.1.1 Correctness 10-9
10.8.1.2 Security 10-9
10.8.1.3 Maintainability 10-9
10.8.1.4 Structure 10-9
10.8.1.5 User Friendliness 10-10

Downloaded from http://www.everyspec.com

CONTENTS (cont'd)

Paragraph *Page*

10.8.2 PROGRAMMING CONSIDERATIONS 10-10
10.8.2.1 Top-Down Design 10-10
10.8.2.2 Incremental Development (Modularity) 10-10
10.8.2.3 Enforced Standard Programming Practices 10-10
10.8.2.4 Independent Testing 10-10
10.8.2.5 Recommended Programming Practices 10-10
10.8.3 SOFTWARE TESTING 10-10
10.8.3.1 Algorithm Evaluation Test 10-11
10.8.3.2 Analytical Modeling 10-12
10.8.3.3 Auditing 10-12
10.8.3.4 Walk-Throughs 10-12
10.8.3.5 Program Inspection 10-12
10.8.3.6 Inspection of Programming Practices 10-12
10.8.3.7 Error-Prone Analysis 10-12
10.8.3.8 Functional Testing 10-12
10.8.3.9 Simulation 10-12
10.8.3.10 Static Analysis 10-12
10.8.3.11 Stress Testing 10-12
10.8.4 DOCUMENTATION 10-13
10.9 INTERFACE 10-13
REFERENCES 10-15
BIBLIOGRAPHY 10-15

GLOSSARY G-1
INDEX I-1

Downloaded from http://www.everyspec.com

LIST OF ILLUSTRATIONS

Figure No.	*Title*	*Page*
2-1	Circular Runout Relative to a Datum Diameter	2-4
2-2	Total Runout Relative to a Datum Diameter	2-5
2-3	Use of Projected Tolerance Zone to Avoid Interference Between Mating Parts	2-6
2-4	Inspection of Alignment by Using Projected Tolerance Zone	2-7
2-5	Design Precautions to Aid Heat Treating	2-26
3-1	Steel Rule	3-1
3-2	Vernier Depth Gage	3-2
3-3	Plain Protractor	3-3
3-4	Universal Bevel Protractor	3-4
3-5	Combination Square Set	3-4
3-6	Applications of Combination Square	3-5
3-7	Outside Micrometer	3-5
3-8	Inside Micrometers	3-6
3-9	Vernier Caliper	3-7
3-10	Feeler Gages	3-8
3-11	Inside and Outside Calipers	3-9
3-12	Transfer Caliper	3-10
3-13	Divider	3-10
3-14	Beam Trammel	3-11
3-15	Beam Trammel Accessories	3-12
3-16	Split Sphere Gages	3-13
3-17	Telescoping Gage	3-14
3-18	Granite Surface Plates	3-15
3-19	Use of Angular Gage Blocks	3-17
3-20	Proper Alignment of Angular Gage Blocks	3-17
3-21	Height Gage With Vernier Scale	3-18
3-22	Bar Parallels	3-19
3-23	Box Parallels	3-20
3-24	Tapered Parallels Used to Measure Inside Diameter	3-21
3-25	Universal Right Angle Block	3-22
3-26	Slotted Angle Block	3-23
3-27	Measuring Iron	3-24
3-28	Toolmaker's Knee	3-25
3-29	V Blocks	3-26
3-30	Thin Blade Steel Square	3-27
3-31	Granite Square	3-28
3-32	Cylindrical Steel Square	3-29
3-33	Direct Reading Cylindrical Square	3-31
3-34	Steel Straightedges	3-31
3-35	Sine Bar	3-31
3-36	Planer Gage	3-32
3-37	Planer Gage Used as a Transferring Device	3-33
3-38	Dial Indicator	3-34
3-39	Minimum Number of Hits for CMM Inspection	3-36
3-40	Coordinate Measuring Machine With Computer	3-38
3-41	Universal Measuring Machine	3-39
3-42	Open Setup for Inspecting Parallelism	3-40

Downloaded from http://www.everyspec.com

LIST OF ILLUSTRATIONS (cont'd)

Figure No.	Title	Page
3-43	Open Setup for Inspecting Perpendicularity	3-41
3-44	Open Setup for Inspecting Total Runout	3-42
3-45	Open Setup for Inspecting True Position	3-43
3-46	Open Setup for Inspecting Location	3-44
3-47	Tolerance Zones	3-45
3-48	Three-Wire Method for Checking Screw Thread Pitch Diameter	3-46
4-1	Toolmaker's Microscope	4-3
4-2	Optical Comparator	4-4
4-3	V Blocks, Centers, and Riser Blocks	4-6
4-4	Rotary Base With Self-Centering Jaws	4-7
4-5	Rotary Glass Staging Fixture	4-7
4-6	Typical Optical Flat Interference Results	4-9
4-7	Production of Interference Bands	4-9
4-8	Autocollimator	4-10
4-9	Alignment Telescope Construction	4-11
4-10	Theodolite	4-12
4-11	Sight Level	4-13
4-12	Jig Transit	4-14
4-13	Alignment Collimator	4-15
4-14	Collimator Viewed Through Alignment Telescope	4-16
4-15	Plumbing Mirror	4-16
4-16	Leveling Mirror	4-17
4-17	Cube Mirror	4-17
4-18	Optical Square	4-18
4-19	A Pentaprism Turns a Line of Sight 90 deg Independent of Its Orientation	4-18
4-20	Optical Micrometer	4-19
4-21	Autocollimation Conversion Unit	4-19
4-22	Combination Autocollimation, Projection, Right-Angle Eyepiece	4-20
4-23	Targets	4-21
4-24	Typical Optical Tooling Scales	4-22
4-25	Optical Tooling Scale Extension Kit	4-22
4-26	Instrument Stand	4-23
4-27	Horizontal Tooling Bar	4-23
4-28	Vertical Tooling Bar	4-24
4-29	Striding Level	4-24
4-30	Functional Diagram for Two-Axis Automatic Autocollimator	4-25
4-31	Operating Arrangement of Two-Axis Automatic Alignment Telescope	4-26
4-32	Operating Arrangement of Alignment Polarimeter	4-27
4-33	Operating Arrangement of Three-Axis Autocollimator-Polarimeter	4-28
4-34	Schematic Diagram of Optical Range Finder	4-29
4-35	Operating Arrangement of Optical Probe	4-29
4-36	Laser Alignment System	4-30
4-37	Schematic of Laser Interferometer	4-31
4-38	Pointing Interferometer	4-32
4-39	Interferometer System	4-33
4-40	Bifurcated Fiber-Optic Probe	4-35
4-41	Characteristic Curve for 0.020-in. Probe	4-35
4-42	Image Dissector Electro-Optical System	4-36
4-43	Scanning Laser Beam System	4-38
4-44	Error Introduced by Gaged Object Tilt	4-39
4-45	Principal Elements of Pneumatic Gaging System	4-40

Downloaded from http://www.everyspec.com

LIST OF ILLUSTRATIONS (cont'd)

Figure No.	*Title*	*Page*
4-46	Schematic of Free Flow Air Gage	4-42
4-47	Basic Back-Pressure-Type Air Gage System	4-43
5-1	Graphical Representation of Focal Length	5-2
5-2	Test Setups for Measuring Focal Length on a Lens Bench	5-3
5-3	Nodal Slide	5-4
5-4	Measurement of Focal Length by Use of Visual Nodal Slide	5-5
5-5	Test Setup For Microscope and Lens Bench Method of Radius of Curvature Measurement	5-6
5-6	Spherometer	5-7
5-7	Electronic Column Spherometer	5-9
5-8	Sagitta Method When Reference Surface S_2 Is a Sphere	5-10
5-9	Test Setups for Radius of Curvature Measurement With an Interferometer System	5-12
5-10	Accuracy of Radius Measurement	5-13
5-11	Twyman-Green Form of Michelson Interferometer	5-14
5-12	Precision Spectrometer	5-15
5-13	Arrangement for Measuring Thickness of Thin Films	5-16
5-14	Method of Preparing Sample Film for Thickness Measurement in Multiple Beam Interferometer	5-17
5-15	Appearance of Narrow Fringes When Thickness of Film Is a Small Fraction of a Wavelength and Film Occupies Portion Below Edge AB	5-17
5-16	Ellipsometer	5-18
5-17	Shirley Yarn Diameter Projector	5-21
5-18	Schematic Drawing of Eberhardt Fine Thread Measuring Device	5-23
5-19	Pictorial Display of Unidirectional Lay Surface	5-24
6-1	Major Gear Types	6-2
6-2	Gear Tooth Profile Nomenclature	6-3
6-3	Runout Measurement by Indicating Overpins	6-5
6-4	Single-Probe Check for Spur and Helical Gears	6-6
6-5	Single-Probe Check for Bevel and Hypoid Gears	6-6
6-6	Double-Probe Check for Spur and Helical Gears	6-7
6-7	Double-Probe Check for Bevel and Hypoid Gears	6-7
6-8	Rolling Check of a Small Gear	6-8
6-9	Schematic of Pitch Checking Instrument	6-10
6-10	Automatic Tooth-Spacing Checker or Comparator	6-11
6-11	Tooth-Spacing Tester	6-12
6-12	Index-Measuring Machine	6-13
6-13	Charts of Both Sides of Gear Teeth Placed Side by Side for Easy Comparison	6-14
6-14	Determination of Maximum Pitch Variation and Maximum Index Variation	6-15
6-15	Angular Measurements for Index Variation	6-16
6-16	Tooth Profile and Corresponding Plot	6-20
6-17	Tooth Tolerance and Corresponding Plot	6-21
6-18	Lead-Checking Machine	6-23
6-19	Setting of Pointer for External Spur and Helical Gears for Lead Check	6-23
6-20	Graph of Right-Hand External Helical Gear Teeth With Short Lead	6-25
6-21	Graph of Right-Hand External Helical Gear Teeth With Long Lead	6-25
6-22	Graph of Left-Hand External Helical Gear Teeth With Long Lead	6-26
6-23	Graph of Left-Hand External Helical Gear Teeth With Short Lead	6-26
6-24	Graph of External Spur Gear With Crowned Teeth	6-27
6-25	Graph of External Helical Gear With Crowned Teeth	6-27
6-26	Graph of External Spur Gear With Tapered Teeth	6-28
6-27	Graph of External Helical Gear With Tapered Teeth and Lead Variation	6-28
6-28	Gear-Rolling Fixture With Suspended Weight	6-29

Downloaded from http://www.everyspec.com

LIST OF ILLUSTRATIONS (cont'd)

Figure No.	Title	Page
6-29	Graph of Gear Tooth Variations Obtained From a Rolling Test	6-30
6-30	Schematic of Single-Flank Testing	6-31
6-31	Single-Flank Testing Data	6-32
6-32	Vernier Tooth Caliper	6-33
6-33	Few of Possible Arrangements Indicating Correct Reading in Span Measurement	6-34
6-34	Addendum Comparator in Use	6-35
6-35	Indicator Method of Blacklash Measurement	6-37
7-1	Single-Ended, Double-Ended, and Progressive Plug Gages	7-3
7-2	Wire-Type Plug Gages	7-3
7-3	Taperlock Plug Gages	7-4
7-4	Trilock Plug Gages	7-4
7-5	Annular Plug Gage	7-5
7-6	Taper Plug Gages	7-5
7-7	Flat Plug Gage for Internal Diameters	7-6
7-8	Flat Plug Gages for Slots and Noncircular Holes	7-6
7-9	Product and Plug Gage Tolerance Relationship	7-15
7-10	Plug Gage Design Example	7-15
7-11	Ring Gages	7-16
7-12	Taper Ring Gages	7-17
7-13	Stepped Ring Gage	7-17
7-14	Product and Ring Gage Tolerance Relationship	7-21
7-15	Ring Gage Design Example	7-21
7-16	Plain Adjustable Snap Gages	7-23
7-17	Built-Up Snap Gages	7-24
7-18	Special Snap Gages for Features Inaccessible by Standard Snap Gage	7-25
7-19	Product and Adjustable Snap Gage Tolerance Relationship	7-28
7-20	Principles of Flush Pin Gage Operation	7-29
7-21	Standard Flush Pin Gages	7-30
7-22	Flush Pin Gage for Drilled Holes	7-32
7-23	Multiple-Pin Flush Pin Gage	7-32
7-24	Internal Flush Pin Gage	7-33
7-25	Flush Pin Gage Design Example—Inspection Requirement	7-36
7-26	Flush Pin Gage Design Example	7-38
7-27	Template Gages for Depth and Length	7-40
7-28	Alternate Designs for a Template Gage for Depth and Length	7-41
7-29	Product and Template Gage Configuration	7-42
7-30	Progressive Plug Gage Design Example—Inspection Requirement	7-45
7-31	Progressive Plug Gage Design Example	7-47
7-32	Receiver Gage Design Example—Inspection Requirement	7-49
7-33	Receiver Gage Design Example	7-51
7-34	Spanner Gage for Feature Relation Gaging Design Example—Inspection Requirement	7-54
7-35	Spanner Gage for Feature Relation Gaging Design Example	7-56
7-36	Spanner Gage for Feature Relation and Location Gaging Design Example—Inspection Requirement	7-56
7-37	Spanner Gage for Feature Relation and Location Gaging Design Example	7-58
7-38	MMC Special True Position Gage Design Example—Inspection Requirement	7-59
7-39	MMC Special True Position Gage Design Example	7-61
7-40	LMC Special True Position Gage Design Example—Inspection Requirement	7-62
7-41	LMC Special True Position Gage Design Example	7-63
7-42	Strap Clamps	7-65
7-43	Lever Classes of Strap Clamps	7-65

Downloaded from http://www.everyspec.com

LIST OF ILLUSTRATIONS (cont'd)

Figure No.	*Title*	*Page*
7-44	Swing Clamp	7-66
7-45	Hook Clamp	7-66
7-46	Quick-Acting Knob	7-66
7-47	Cam Clamps	7-67
7-48	Wedge Clamps	7-68
7-49	Toggle-Action Clamps	7-68
7-50	Fixture Gage Design Example—Inspection Requirement	7-71
7-51	Fixture Gage Design Example	7-72
8-1	Spline Terms, Symbols, and Drawing Data	8-3
8-2	Sector Spline Plug Gage With Two Teeth per Sector (Paddle Gage)	8-4
8-3	Sector Spline Ring Gage With Two Teeth per Sector (Snap Ring Gage)	8-4
8-4	Involute Spline Space Width and Tooth Thickness Inspection	8-4
8-5	Composite Spline Plug Gages and Equations "Go" and "Not Go", Side Fit and "Not Go" Major Diameter Fit	8-8
8-6	Composite Major Diameter Fit Spline Plug Gage and Equations: "Go"	8-8
8-7	Sector Spline Plug Gage and Equations: "Not Go"	8-9
8-8	Major Diameter Spline Plug Gage and Equations: "Go" and "Not Go"	8-10
8-9	Tapered Tooth Composite Spline Plug Gage and Equations: Side Fit	8-10
8-10	Tapered Tooth Sector Spline Plug Gage and Equations	8-11
8-11	Composite Spline Ring Gages and Equations: "Go" and "Not Go" Side Fit and "Not Go" Major Diameter Fit	8-15
8-12	Composite Major Diameter Fit Spline Ring Gage and Equations: "Go"	8-16
8-13	Sector Spline Ring Gage and Equations: "Not Go"	8-17
8-14	Tapered Tooth Master for Composite Ring Gage and Equations	8-17
8-15	Tapered Tooth Master for "Not Go" Sector Ring Gage and Equations	8-18
8-16	Woodruff Keyslot Gages and Dimensions	8-23
9-1	Typical Weapon Chamber Features	9-2
9-2	Gages for Small Caliber Chamber	9-3
9-3	Inspection of Barrel With MMC Gaging Element and Gaging Ring	9-3
9-4	Ammunition Nomenclature	9-6
9-5	A C-Frame Comparator	9-13
9-6	Work-Holding Centers for C-Frame Comparator	9-13
9-7	Various Shapes of Contact Points for Bench Comparators	9-14
9-8	Plate Comparator	9-15
9-9	Portable Comparator for External Dimensions	9-16
9-10	Portable Comparator for Internal Dimensions	9-16

Downloaded from http://www.everyspec.com

LIST OF TABLES

Table No.	Title	Page
2-1	Cross-Reference Table—Elements and Inspection Methods	2-9
2-2	Characteristics and Applications of Standard and Special Measuring Equipment	2-11
2-3	Effects of Alloying Elements on Steel	2-29
2-4	Sample Gage Tolerance Table	2-31
4-1	Accuracy of Electro-Optical System Employing an Image Dissector	4-37
6-1	Recommended Methods for Control of Runout	6-9
6-2	Recommended Methods of Control of Pitch Variation	6-17
6-3	Recommended Methods of Control of Profile	6-22
6-4	Recommended Methods of Control of Lead	6-24
6-5	Recommended Methods of Control of Tooth Thickness	6-36
7-1	Product Geometry Selection Criteria	7-7
7-2	Choice of Standard Plug Gage Design	7-7
7-3	Types of Gage Design or Construction	7-8
7-4	Recommended Gage Materials for Various Applications	7-8
7-5	Materials Recommended for Large Inspection Quantities	7-9
7-6	Gage Maker's Tolerances	7-11
7-7	Flat and Groove Dimensions	7-12
7-8	Recommended Surface Finish Values for Gaging Elements	7-12
7-9	Recommended Surface Finish Values for Nongaging Surfaces	7-13
7-10	Recommended Hardness Values for Commonly Used Gage Materials	7-13
7-11	Ring Gage Selection Based on Size	7-18
7-12	Ring Gage Selection Based on Performance Requirements	7-18
7-13	Snap Gage Selection Based on Performance Requirements	7-26
7-14	Flush Pin Gage Selection Based on Size	7-34
7-15	Flush Pin Gage Selection Based on Performance Requirements	7-34
8-1	Product Screw Threads Reference Documents	8-2
8-2	Types and Uses of Spline Plug Gages	8-5
8-3	Gage Maker's Tolerances as a Function of Methods of Dimensioning and Type of Gage	8-6
8-4	Variation Allowances	8-6
8-5	Tolerances for Actual Spacing and Tooth Thickness of Gages in Hundred Thousandths of an Inch (20 = 0.00020 in.)	8-7
8-6	Tolerances for Major and Minor Diameters	8-7
8-7	Wear Allowances	8-7
8-8	Chamfer Cutting Angle β for "Go" Composite Major Diameter Fit Plug Gage	8-12
8-9	Types and Uses of Spline Ring Gages	8-15
9-1	Gages Required For Small Caliber Chamber Inspection	9-4
9-2	Gages Required For Large Caliber Chamber Inspection	9-5
10-1	Data Item Description List	10-14

Downloaded from http://www.everyspec.com

LIST OF ABBREVIATIONS AND ACRONYMS

A = tooth thickness code
AGD = American Gage Design
AGMA = American Gear Manufacturers Association
ANSI = American National Standards Institute
AR = Army Regulation
ASME = American Society of Mechanical Engineers
ASTM = American Society for Testing and Materials
AWS = automatic withdrawal standardization
BIT = built-in test
BITE = built-in test equipment
CAIS = computer-aided inspection system
CMDP = "Go" major diameter plug
CMM = Coordinate Measuring Machine
CPCI = computer program configuration item
CPU = central processing unit
CRT = cathode ray tube
DA = Department of the Army
DARCOM = US Army Materiel Development and Readiness Command
DID = data item description
DoD = Department of Defense
DOD-STD = Department of Defense Standard
ECP = Engineering Change Proposal
F/number = effective focal length divided by clear aperture
FED-STD = Federal Standard
FIM = full indicator movement
FMS = flexible manufacturing systems
GCP = "Go" composite plug
GCR = "Go" composite ring
GMDP = "Go" major diameter plug
GT = group technology
H = horizontal
HC = material designation for carbon steel
ILS = instruction-level simulator
LED = light-emitting diode
LMC = Least Material Condition
MIL-STD = Military Standard
MMC = Maximum Material Condition
MTBF = mean-time-between-failures
NAS = National Aeronautical Society
NDT = nondestructive testing
NGCP = "Not Go" composite plug
NGCR = "Not Go" composite ring
NGMDP = "Not Go" major diameter plug
NGMDR = "Not Go" major diameter ring
NGSP = "Not Go" sector plug
NGSR = "Not Go" sector ring
Q = tolerance source identifier
QWOT = quarter wave optical thickness
R/number = radius of curvature divided by clear aperture
RAM = reliability, availability, and maintainability
RAM = random access memory
RFS = regardless of feature size
RMS = root mean square
ROM = read only memory
SI = International System of Units
SME = Standard Measuring Equipment
TDP = technical data package
TPI = threads per inch
TTCP = taper tooth composite plug
TTM = tapered tooth master
TTSP = taper tooth sector plug
UUT = unit under test
V = vertical
V&V = validation and verification

Downloaded from http://www.everyspec.com

CHAPTER 1
INTRODUCTION

This chapter addresses the purpose and scope of the handbook, describes the role of dimensional inspection in the product assurance mission, and alerts the reader to related configuration management and standard drawing practice requirements. Key definitions and a list of related documents are also presented.

1.1 PURPOSE AND SCOPE

The purpose of this handbook is to assist personnel involved in the design, procurement, or production of materiel for the Department of the Army (DA) with the selection or design of inspection equipment for dimensional characteristics. The handbook covers three main topic areas: (1) measuring equipment and methods, (2) gage design and use, and (3) automated and computer-aided inspection techniques.

In the area of measuring equipment and methods, a discussion of the principles and applications of basic instruments includes descriptions of currently available general-purpose measuring equipment. This discussion is intended to provide some background information for personnel who may be involved in selecting measuring equipment, either for a specific purpose or for a number of different purposes.

A significant portion of the handbook deals with gage design. This discussion is intended to serve as a primer and as a policy document for personnel involved in gage selection or design. The intent of including gage design policy in this handbook is to provide designers, manufacturers, and inspectors with a common reference point that will result in greater uniformity of design practice.

The chapters that deal with automated and computer-aided inspection equipment are intended to identify considerations in the design and selection of such equipment. Although it would be nearly impossible to prescribe the appropriate equipment to be used in any particular set of circumstances, the criteria set forth will save time and perhaps allow the purchaser to avoid some mistake that might have been made because an important consideration had been overlooked. This is an area in which changes in technology should be expected.

1.2 PRODUCT ASSURANCE

The Army's product assurance mission consists of both design assurance and product conformance. Dimensional inspection is but one facet of that mission. The product assurance program is designed to enhance quality throughout the life cycle of a product. The concepts, policies, equipment, and techniques presented in this handbook are valid for all phases of the life cycle.

1.3 CONFIGURATION MANAGEMENT

Product design is a process that attempts to optimize numerous factors. The designer has input from many interested parties, such as the user and the manufacturer as well as those representing safety, quality assurance, human factors engineering, and standardization interests. Because of this necessarily complex organization, numerous changes to the technical data package (TDP) that supports procurement are likely. DA has adopted a formal procedure known as configuration management to control these changes and insure proper coordination and input from all the parties involved. Configuration management also provides an audit trail that ties together information about the original manufactured item and subsequent changes. This information is imperative in order to provide proper continuing support for fielded items since many areas are covered with a change order, waiver, etc.

As noted in par. 1.1, the primary purpose of this handbook is to provide guidance relative to the design and selection of inspection equipment for dimensional characteristics. Basic guidance of this type is based on engineering principles and remains valid over a long time period. Configuration management, on the other hand, is an evolving process that undergoes frequent change. For that reason, the topic is introduced here only

Downloaded from http://www.everyspec.com

to make the reader aware of existing requirements. For additional information see Army Regulation (AR) 70-37, *Configuration Management* (Ref. 1); Department of Defense Standard (DOD-STD)-480, *Configuration Control—Engineering Changes, Deviations, and Waivers* (Ref. 2); and Military Standard (MIL-STD)-481, *Configuration Control—Engineering Changes, Deviations, and Waivers (Short Form)* (Ref. 3).

1.4 GENERAL DRAWING STANDARDS

Because of the size and geographical diversity of the Department of Defense (DoD), standardized drawing practices are essential if engineering drawings are to be interpreted correctly and efficiently by all users. Guidance on the uniform drawing practices adopted by DoD can be found in DOD-STD-100, *Engineering Drawing Practices* (Ref. 4), and DOD-D-1000, *Drawings, Engineering and Associated Lists* (Ref. 5).

1.5 UNITS

United States Customary Units are featured in this handbook consistent with the currently predominant dimensioning practice. The International System of Units (SI) could have been used equally well without prejudice to the principles established. Unless otherwise noted, all dimensions are specified in the US system.

1.6 KEY DEFINITIONS

Definitions are included throughout the text as appropriate and also in the glossary. There are several key terms, however, that are fundamental to the understanding of this handbook. To sensitize the reader to these key terms, definitions follow:

1. *Tolerance*. The deviation from the specified (basic) size of the feature that will still permit the proper assembly and functioning of mating parts. Tolerance is specified as "+" or "−" from the basic dimension.

2. *Gage*. An instrument that permits a pass or fail determination of a dimensional characteristic without knowledge of the actual dimension.

3. *Standard Measuring Equipment (SME)*. Commercially available measuring equipment commonly used in a machine shop. In this handbook SME includes measuring instruments, transferring devices, surface plates and accessories, and coordinate measuring machines.

4. *Automated Inspection Equipment*. Measuring or gaging instruments that make a pass or fail determination of a dimensional characteristic without human interaction. Automated inspection equipment is usually integral to a production line and is often computer controlled.

5. *Interrupted Diameter*. A cylindrical or spherical part whose surface is not smooth. In this handbook this category of parts includes threads, gears, splines, and knurls.

6. *Wear Allowance*. Extra material left on gaging surfaces to accommodate the wear expected during the useful life of a gage.

7. *Maximum Material Condition (MMC)*. The condition in which a feature contains the maximum amount of material within the stated size limits. MMC also refers to a dimensioning concept (based upon the condition) to insure a noninterference fit between mating parts. With this concept the allowable tolerance varies as the feature size departs from MMC.

8. *Least Material Condition (LMC)*. The condition in which a feature contains the least amount of material within the stated size limits. LMC also refers to a dimensioning concept (based upon the condition) in which the allowable tolerance varies as the feature size departs from LMC.

9. *Regardless of Feature Size (RFS)*. A dimensioning concept used when the tolerance is independent of the feature size.

1.7 RELATED DOCUMENTS

1.7.1 MILITARY

Document No.	Title
AR 70-37	*Configuration Management*
DARCOM-R 702-2	*Product Assurance and Test—Quality Engineering for Army Material*
DOD-STD-100	*Engineering Drawing Practices*

Downloaded from http://www.everyspec.com

DOD-STD-480	*Configuration Control—Engineering Changes, Deviations, and Waivers*
MIL-STD-105	*Sampling Procedures and Tables for Inspection by Attributes*
MIL-STD-109	*Quality Assurance Terms and Definitions*
MIL-STD-110	*Gages, Plug, Plain, Cylindrical, Go*
MIL-STD-111	*Gages, Plug, Plain, Cylindrical, Not Go*
MIL-STD-112	*Gages, Ring, Plain, Go*
MIL-STD-113	*Gages, Ring, Plain, Not Go*
MIL-STD-114	*Gage, Plug, Thread, Go (Class X) for Unified American National Standard Internal Thread*
MIL-STD-115	*Gage, Plug, Thread, Not Go, Unified American National Standard Internal Thread*
MIL-STD-116	*Gage, Ring, Thread, Go, (Class X) and Related Setting Plug Gages, Go and Not Go Plain Plug Minor Diameter Acceptance Check Gages for Unified and American National Standard External Threads*
MIL-STD-117	*Gage, Ring, Thread, Lo (Not Go) and Related Thread Setting Plug Gages, Go and Not Go Plain Plug Minor Diameter Acceptance Check Gages for Unified and American National Standard External Threads*
MIL-STD-118	*Gage, Snap, Plain Adjustable*
MIL-STD-120	*Gage Inspection*
MIL-STD-134	*Gage, Plug, Plain Cylindrical, Not Go for Minor Diameters of Standard Classes 3F Internal Threads*
MIL-STD-273	*Gage, Plug, Thread Setting, Class W, for Go Gages, Unified Standard Classes 2A and 3A and American National Standard Class 3 External Threads*
MIL-STD-274	*Gage, Plug, Thread, Setting, Class W, for Lo (Not Go), Gages, Unified Standard Classes 2A and 3A and American National Standard External Threads*
MIL-STD-454	*Standard General Requirements for Electronic Equipment*
MIL-STD-481	*Configuration Control—Engineering Changes, Deviations, and Waivers (Short Form)*
MIL-STD-483	*Configuration Management Practices for Systems, Equipment, Munitions, and Computer Programs*
MIL-STD-1235	*Single and Multilevel Continuous Sampling Procedures and Tables for Inspection by Attributes—Functional Curves of the Continuous Sampling Plans*
MIL-STD-1267	*Dimensioning of Barrel Chambers of Small Arms Weapons*
MIL-STD-1472	*Human Engineering Design Criteria for Military Systems, Equipment, and Facilities*
MIL-STD-45662	*Calibration Systems Requirements*
MIL-A-002550	*Ammunition, General Specification for*
MIL-C-675	*Coating of Glass Optical Elements (Antireflection)*
MIL-G-10944	*Gages, Dimensional Control*
MIL-G-45654	*Gage, Plug and Ring, Thread*
MIL-G-46382	*Gage, Snap, Thread Roll*
MIL-G-62454	*Gear, Bevel, Inspection of*
MIL-G-83984	*Gage, Surface Plate Flatness Checking*
MIL-G-87955	*Gage, Snap, Adjustable, Dial Indicating*
MIL-O-13830	*Optical Components for Fire Control Instrument, General Specification Governing the Manufacture, Assembly, and Inspection of*
MIL-Q-45970	*Quality Assurance for Weapons and Support Material*
MIL-S-8879	*Screw Threads, Controlled Radius Root With Increased Minor Diameter, General Specifications for*
DOD-D-1000	*Drawings, Engineering and Associated Lists*
MS-90406	*Gage, Ring, Spline (Go-No-Go)*

Downloaded from http://www.everyspec.com

1.7.2 MILITARY ADOPTED

Document No.	Title
FED-STD-H28	*Screw Thread Standards for Federal Services*
FED-STD-368	*Quality Control System Requirements*
GGG-G-15	*Gage Blocks and Accessories (Inch and Metric)*
GGG-G-17	*Gage, General-Purpose*
GGG-G-61	*Gage, Plug and Ring, Plain and Thread*
GGG-P-463	*Plate, Surface (Granite) (Inch and Metric)*
GGG-S-656	*Squares, Carpenters', Diemakers', and Machinists'*
MIL-HDBK-108	*Quality Control and Reliability—Sampling Procedures and Tables for Life and Reliability Testing (Based on Exponential Distribution)*
MIL-HDBK-109	*Quality Control and Reliability—Statistical Procedures for Determining Validity of Suppliers Attributes Inspection of*
ANSI B1.1-1983	*Unified Inch Screw Threads—UN and UNR Thread Forms*
ANSI B1.3-79	*Dimensional Acceptability, Screw Thread Gaging Systems for*
ANSI B1.15	*Unified Inch Screw Threads—UNJ Thread Form*
ANSI B1.21M-78	*Metric Screw Threads—MJ Profile*
ANSI B6.1-68R74	*Gears, Spur, Coarse-Pitch Involute, Tooth Proportions for—68R74*
ANSI B17.2-67R78	*Keys and Keyseats, Woodruff*
ANSI B46.1-78	*Surface Texture (Surface Roughness, Waviness and Lay)*
ANSI B47.1-81	*Gage Blanks*
ANSI B47.1A-79	*Gage Blanks*
ANSI B92.1-70	*Involute Splines and Inspection*
ANSI/ASME B1.7M-84	*Screw Threads, Nomenclature, Definitions, and Letter Symbols for*
ANSI/ASME B1.16M-84	*Gages & Gaging for Metric M Screw Threads*
ANSI/ASME B1.22M-85	*Gages & Gaging for M&J Series Metric Screw Threads*
ASTM B244-79	*Coatings, Anodic, Measuring Thickness of, on Aluminum With Eddy Current Instruments*
ASTM B567-84	*Coating Thickness, Measurement of, by the Beta Backscatter Method*
ANSI/ASTM D1776-79	*Standard Practice for Conditioning Textiles for Testing*
ASTM E376-69R79	*Standard Recommended Practice for Measuring Coating Thickness by Magnetic Field or Eddy Current (Electromagnetic) Test Methods*
ASME B1.2-83	*Gages & Gaging for Unified Inch Screw Threads*
ASME B1.13M-83	*Screw Threads Metric M Profile*
ASME B47.1AM-82	*Gage Blanks*
ASME B94.6-1966	*Knurling*
ASTM B487-85	*Metal and Oxide Coating Thickness by Microscopial Examination of Cross Section, Measurement of*
ASTM B499-85	*Coating Thickness by the Magnetic Method, Nonmagnetic Coatings on Magnetic Base Metals, Measurement of*
ASTM B504-82	*Metallic Coatings by the Coulometric Method, Measuring of Thickness of*
ASTM B530-85	*Nickel Coatings, Electrodeposited, on Magnetic and Nonmagnetic Substrates, Measurement of Coating Thickness by the Magnetic Method*
ASTM B568-84	*Spectrometry, Measurement of Coating Thickness by X Ray*
ASTM D1186-81	*Film Thickness, Dry, of Nonmagnetic Coatings Applied to a Ferrous Base, Nondestructive Measurement of*

Downloaded from http://www.everyspec.com

REFERENCES

1. AR 70-37, *Configuration Management*, 1 July 1974.
2. DOD-STD-480A, *Configuration Control—Engineering Changes, Deviations, and Waivers*, 12 April 1978.
3. MIL-STD-481A, *Configuration Control—Engineering Changes, Deviations and Waivers (Short Form)*, 18 October 1972.
4. DOD-STD-100C, *Engineering Drawing Practices*, 1 March 1983.
5. DOD-D-1000B, *Drawings, Engineering and Associated Lists*, 13 May 1983.

Downloaded from http://www.everyspec.com

CHAPTER 2
ELEMENTS OF INSPECTION EQUIPMENT SELECTION AND DESIGN

Inspection equipment selection and design considerations for various situations encountered in manufacturing are discussed in this chapter. A comprehensive cross-reference table facilitates selection of inspection equipment for a particular requirement. General design sequence and safety, material selection, heat treatment, calibration, and protection considerations are described.

2.1 INTRODUCTION

Many types of inspection requirements are contained in the procurement, production, and maintenance of materiel for the Department of the Army (DA). Usually these requirements include the inspection of one or more dimensional features.

The tolerances specified on a product drawing dictate the accuracy and ultimately the cost of the required inspection equipment. Especially in cases where positional tolerances are involved, the tolerances and complexity of inspection change with the dimensioning and tolerancing concepts used. For example, the regardless of feature size (RFS) concept usually requires more complex and more costly gaging equipment than the maximum material condition (MMC) concept, but in certain cases the RFS concept may be the only applicable tolerancing concept. Therefore, a clear policy must exist regarding tolerancing concepts and design and selection of inspection equipment. Lack of such a policy can cause excessive rejection of parts and high product and rework costs. The policy must be based firmly on the theories of inspection and gaging and upon knowledge of modern manufacturing methods.

This chapter discusses the identification of features to be inspected and elaborates upon the basic policy for the design of inspection equipment enumerated in US Army Materiel Development and Readiness Command (DARCOM) Regulation 702-2, *Product Assurance and Test—Quality Engineering for Army Materiel*, (Ref. 1), which states that inspection equipment design considerations are an integral part of a total quality assurance system and that commercially available, rather than specially designed, inspection equipment will be used whenever possible.

Inspection equipment undergoes changes in size and form due to wear, corrosion, and occasional abuse. All equipment must be checked and calibrated periodically to insure proper performance. Because of the potential cost associated with improper performance of inspection equipment and the possibility of accepting nonconforming parts, the Army has adopted a formal calibration system to monitor periodically the accuracy of each item of inspection equipment in use. Needed adjustments are made before the equipment is returned to service. This calibration system is described in Military Standard (MIL-STD)-45662, *Calibration System Requirements*, (Ref. 2). Calibration considerations that affect inspection equipment design are discussed in this chapter.

2.2 ANALYSIS OF REQUIREMENTS

All product inspection requirements can be expressed in terms of a toleranced value relating to dimensions, function, performance, composition, or physical properties of material. Because this handbook covers only dimensional characteristics, the major inspection requirements discussed are size, form, orientation, location, and runout. The various source documents for these requirements are also presented.

American National Standards Institute (ANSI) Standard Y14.5, *Dimensioning and Tolerancing*, (Ref. 3) has been adopted by the Department of Defense (DoD) and is the primary reference source on geometric symbology, dimensioning methods, and tolerancing concepts. As such, it is referenced throughout this handbook. Familiarity with this document is essential to a complete understanding of the material covered herein.

Downloaded from http://www.everyspec.com

To aid in understanding the paragraphs that follow, the definitions of a datum and a feature are quoted from Ref. 3:

1. A *datum* is "a theoretically exact point, axis, or plane derived from the true geometric counterpart of a specified datum feature. A datum is the origin from which the location or geometric characteristics of features of a part are established.".

2. A *feature* is the "general term applied to a physical portion of a part, such as a surface, hole, or slot".

2.2.1 TYPES OF INSPECTION REQUIREMENTS

2.2.1.1 Size

The size of any feature normally is expressed in terms of linear dimensions or in a combination of linear and angular dimensions and their associated tolerances, and size is generally considered to be one of the requirements most easily verified by inspection. Note that unless otherwise specified, the limits of size of a feature also prescribe the limits of allowable variations in geometric form (par. 2.7, Ref. 3). Form is discussed in par. 2.2.1.2. Thus if inspection of the form tolerance is justified, the inspection method used to verify the size must also verify the form or the form requirement must be treated separately. A positional requirement also may be contained in the same callout, but it is a distinctly separate requirement and must be so treated. Positional requirements are discussed in par. 2.2.1.5.

2.2.1.2 Form

Form is a general term used to define the geometrical characteristics of a part. Form requirements may be expressed in terms of tolerances for straightness, flatness, roundness, and cylindricity.

"*Straightness* is the condition in which an element of a surface or an axis is in a straight line" (Ref. 3).

"*Flatness* is the condition of a surface in which all elements are in one plane" (Ref. 3).

"*Roundness (Circularity)* is a condition of a surface of revolution where

1. For a cylinder or cone, all points of the surface intersected by any plane perpendicular to a common axis are equidistant from that axis.

2. For a sphere, all points of the surface intersected by any plane passing through a common center are equidistant from that center" (Ref. 3).

"*Cylindricity* is a condition of a surface of revolution in which all points of the surface are equidistant from a common axis" (Ref. 3).

2.2.1.3 Orientation

Feature orientation requirements may be expressed in terms of tolerances for angularity, perpendicularity (squareness), and parallelism—all of which relate to a datum.

"*Angularity* is the condition in which a surface or axis is at a specified angle (other than 90 deg) from a datum plane or axis" (Ref. 3).

"*Perpendicularity* is the condition in which a surface, median plane, or axis is at a right angle to a datum plane or axis" (Ref. 3).

"*Parallelism* is the condition in which all points of a surface are equidistant from a datum plane or all points of an axis are equidistant from a datum axis" (Ref. 3).

2.2.1.4 Profile

"Profile is the outline of an object in a given plane. Profiles are formed when a three-dimensional object is projected onto a plane or when cross sections are taken through the figure" (Ref. 3). Similarly, projecting a line or a surface onto a plane produces the profile of the line or the surface, respectively.

2.2.1.5 Location

Location requirements control the location of features—such as holes, slots, bosses, and tabs—on a part and also the center distances among these features. Location requirements are expressed in terms of position, symmetry, and concentricity.

Downloaded from http://www.everyspec.com

Position can be defined as the location of features in relation to each other or to a datum. Basic dimensions establish the true (theoretically exact) position of the feature. A positional tolerance defines a zone within which the feature is allowed to deviate from the true position. The method of specifying tolerances for position is known as positional tolerancing, which is the basis for functional gaging. *Symmetry* is the condition in which a feature is (or features are) symmetrically disposed about the axis or center plane of a datum feature (Ref. 3). Although older drawings may show symmetry as a separate locational requirement, Ref. 3 now calls for such a requirement to be specified in terms of positional tolerances.

Concentricity is the condition in which the axes of all cross-sectional elements of a surface of revolution are common to the axis of a datum feature (Ref. 3). Because irregularities in the surface of the feature to be inspected make it difficult to establish its axis, determining the conformance of a product to a concentricity requirement may require excessive inspection time. Therefore, unless the need to control the axis rather than the surface is compelling, use of a runout or positional tolerance is recommended. Runout is discussed in par. 2.2.1.6.

2.2.1.6 Runout

Runout is the composite deviation of a surface of revolution from the specified form and is measured normal to the surface by full indicator movement (FIM) through one complete revolution of the part about the datum axis.

Circular runout is the composite deviation of an individual circular element of a surface of revolution from the specified form as measured through one revolution of the part. Circular elements are generated when a part is rotated past a fixed point. Fig. 2-1 shows circular runout relative to a datum diameter. The representation of this inspection requirement on the product drawing is shown in Fig. 2-1(A), and the proper method of performing the inspection is shown in Fig. 2-1(B). Where the requirement applies to a portion of the surface as opposed to a singular circular element, each circular element must be within the specified runout tolerance. A circular runout tolerance represents the combined effect of variations in circularity and coaxiality. When applied to a surface perpendicular to the datum axis, circular runout controls wobble.

Total runout is the composite deviation of all part surface elements from the true geometrical form, attitude, and position. The representation of total runout relative to a datum diameter is shown in Fig. 2-2(A), and the proper method of inspecting the requirement indicated is shown in Fig. 2-2(B). The entire surface must be within the specified runout tolerance zone—0.02 FIM in this example—when the part is rotated 360 deg about the datum axis with the indicator placed at every location along the surface in a position normal to the true geometric shape without resetting the indicator. Thus the total runout tolerance forms a sleeve of constant thickness defined by forms coaxial with the datum axis. As such, it controls the cumulative error due to variations in circularity, straightness, coaxiality, angularity, taper, and profile of a surface.

2.2.1.7 Projected Tolerance Zone

Projected tolerance zone is a concept used to prevent alignment and interference problems between mating parts that can be caused by variations in perpendicularity of threaded or press-fit holes. The tolerance zone is "projected" to a point in space where the improper alignment could cause the assembly to malfunction or where interference could occur. Fig. 2-3 shows use of a projected tolerance zone to avoid interference between mating parts. Fig. 2-3(A) demonstrates the problem that can result if the tolerance zone is limited to the length of the threaded or press-fit hole, and Fig. 2-3(B) shows how the problem can be avoided by using a projected tolerance zone. Fig. 2-4 shows a projected tolerance zone used where alignment is important even though there is no interference between parts. In this case the projected tolerance zone insures that the rocket does not wobble in flight. Thus projected tolerance is concerned with the location and variation in perpendicularity of the threaded or press-fit holes only to the extent that they affect a mating or functioning of parts at some distance from the hole. The tolerance then also identifies maximum permissible dimensions of the mating part.

2.2.2 SOURCES OF PARAMETERS TO BE INSPECTED

The DA uses several different documents to communicate inspection requirements to the vendor or shop floor. In the usual order of precedence the documents are the contract, the product drawing, and product specifications. The relevant portion of the specification is Section 4, "Quality Assurance Provisions".

Downloaded from http://www.everyspec.com

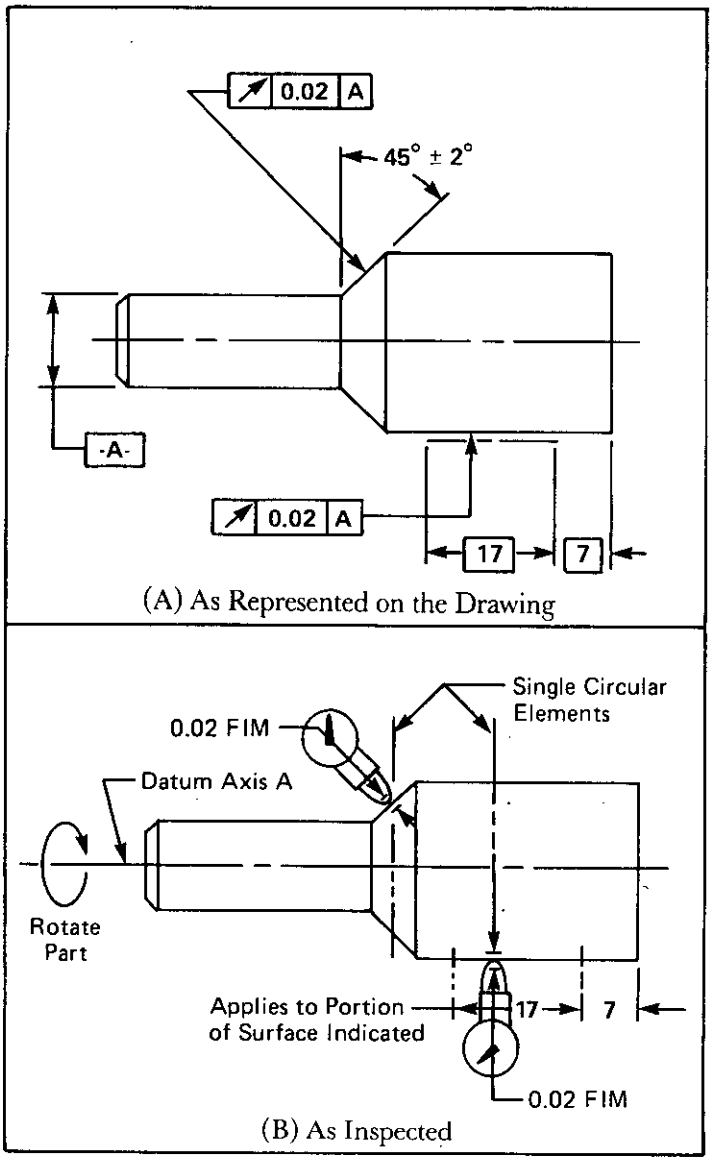

Adapted from ANSI Y14.5M-1982, *Dimensioning and Tolerancing*. © copyright 1982 by The American Society of Mechanical Engineers, New York, NY.

Figure 2-1. Circular Runout Relative to a Datum Diameter (Ref. 3)

In virtually all hardware procurement activities, a product drawing is the primary document used to define the product, and it defines each product feature in terms of dimensions and tolerances. Additionally, the drawing may define the functional and performance requirements of the product by notes and by references to military specifications or purchase descriptions.

Study and analysis of the component drawings are the most important phases of inspection equipment design. They serve as an engineering check on the drawings from the perspective of interchangeability of parts and ease of inspection, and they provide feedback to the engineer where necessary. To eliminate ambiguities, omissions, and errors, the following steps are recommended:

1. Insure that the drawing is correct and as specified in the contract by checking the part number and revision level.

Downloaded from http://www.everyspec.com

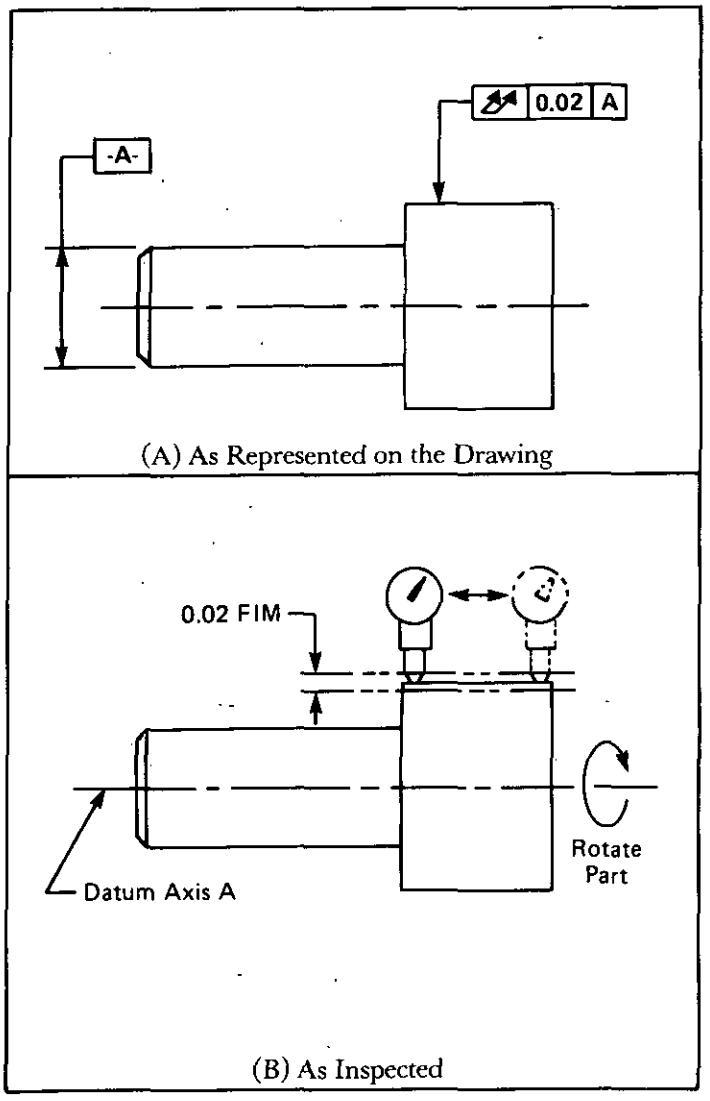

Adapted from ANSI Y14.5M-1982, *Dimensioning and Tolerancing*. © copyright 1982 by The American Society of Mechanical Engineers, New York, NY.

Figure 2-2. Total Runout Relative to a Datum Diameter (Ref. 3)

2. Ascertain that no conflict exists among any of the documents on which inspection equipment design is to be based, such as the drawings, specifications, and quality assurance provisions.

3. Insure that the product characteristics are adequately defined to be practical for inspection purposes. Specification of datum and tolerancing concepts such as MMC should be defined clearly.

For callouts, symbols, dimensioning, and tolerancing, refer to the dimensioning and tolerancing standard specified on the product drawing. If technical data fail to comply with any of these requirements, the ability to design inspection equipment maybe seriously impaired, and engineering change proposal (ECP) action must be initiated.

2.3 SELECTION OF INSPECTION EQUIPMENT

The selection of an appropriate inspection method and type of equipment is basically an economic decision because the designer seeks to achieve the inspection objectives at the lowest cost. In addition to the purely

Downloaded from http://www.everyspec.com

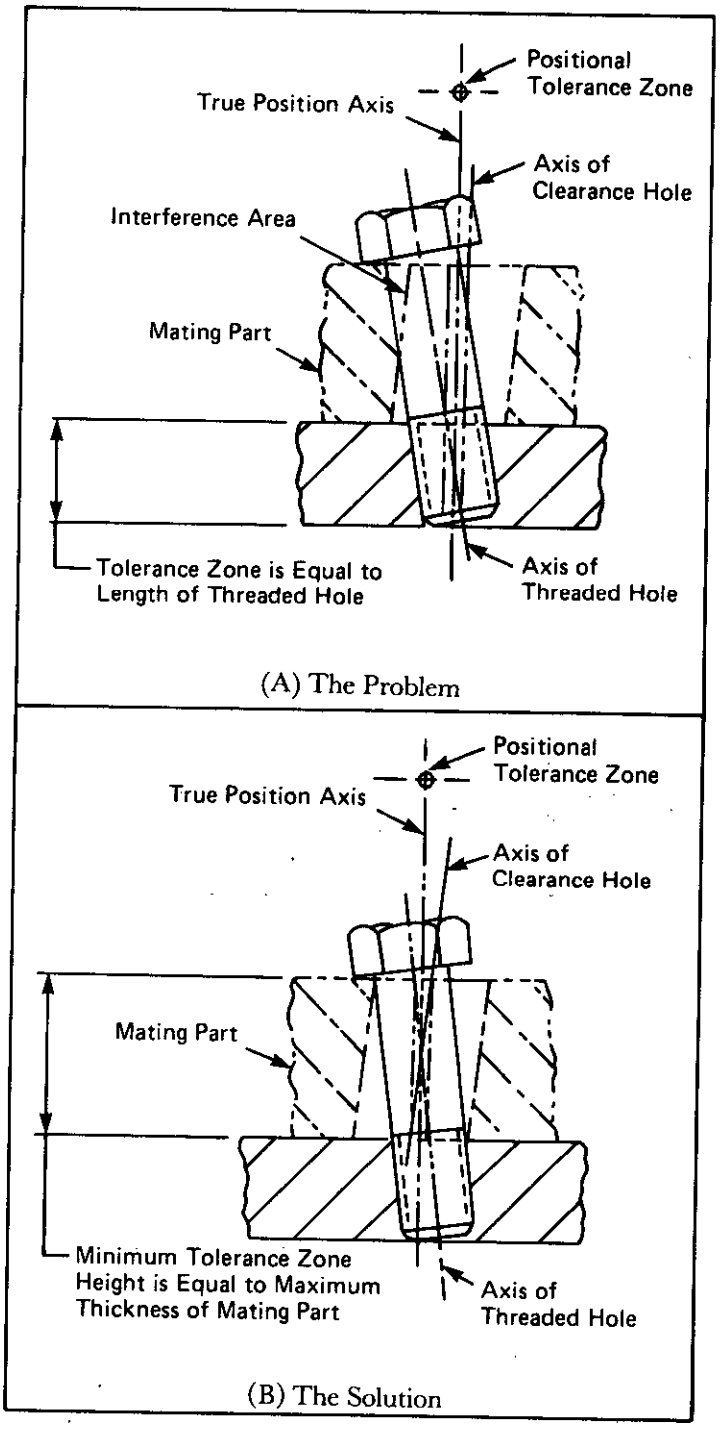

Adapted from ANSI Y14.5M-1982, *Dimensioning and Tolerancing*. © copyright 1982 by The American Society of Mechanical Engineers, New York, NY.

Figure 2-3. Use of Projected Tolerance Zone to Avoid Interference Between Mating Parts (Ref. 3)

Downloaded from http://www.everyspec.com

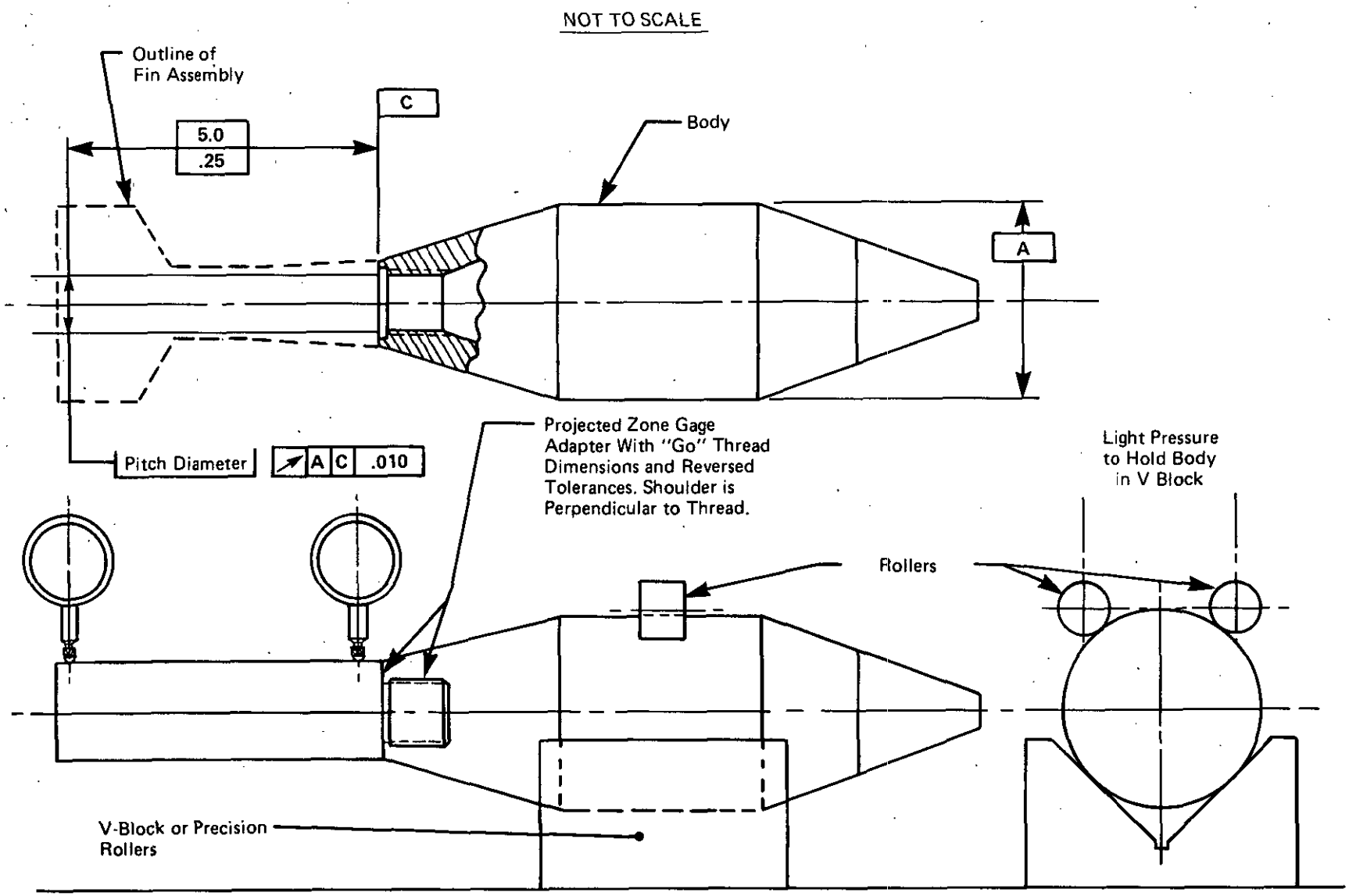

Figure 2-4. Inspection of Alignment by Using Projected Tolerance Zone

Downloaded from http://www.everyspec.com

economic considerations, numerous physical considerations impact the decision. Both types of factors are discussed in this paragraph.

Inspection of dimensional characteristics can be accomplished in two different ways, namely, through inspection by variables or inspection by attributes. Inspection by variables involves measuring individual product elements. Standard, as well as special measuring and indicating, instruments are used. The major advantage of knowing the absolute value of each dimension is that this information can be used to control manufacturing tools and processes.

Inspection by attributes, however, does not require knowledge of the absolute value of product dimensions. Rather, special devices (gages) are used to establish upper and lower limits of product acceptability. Violating either limit results in product rejection. Although inspection by attributes is often more economical, it does not provide information sufficient for manufacturing process control. The organization of much of the remainder of this handbook is based upon the distinction between inspection by variables (measuring) and inspection by attributes (gaging).

At the outset the equipment selected must be suitable for the dimension to be inspected and appropriate for the tolerance specified. Table 2-1 cross references inspection requirements with inspection methods and is provided to help the designer narrow the field of inspection equipment that might be appropriate for any particular requirement. Table 2-2 lists characteristics of standard and special measuring equipment. References to additional information contained elsewhere in this handbook are also indicated in these tables.

2.3.1 PHYSICAL CONSIDERATIONS

2.3.1.1 Part Geometry

To a large extent, part geometry determines the type of inspection equipment that will be most appropriate. For example, an external diameter requires inspection equipment with measuring surfaces on the inside of the jaws, whereas an internal diameter requires equipment with measuring surfaces on the outside of the jaws. Therefore, study and analysis of part geometry are imperative.

2.3.1.2 Part Size and Complexity

Part size is an important aspect in the selection of inspection equipment. Smaller parts are usually easier to handle than larger and heavier parts, and smaller parts can be moved to an inspection station, whereas larger parts often must be inspected in place with portable inspection equipment.

The degree of part complexity also has a significant impact on the selection of inspection equipment. For instance, complex part geometry may hamper or prevent simultaneous contact with the datum surface and the measured surface. In such cases special inspection equipment must be designed or the part design modified. Inspectability must be considered during the part design process.

2.3.1.3 Location of Inspection Station

The location of the inspection station can be an important consideration in the selection of inspection equipment. The location of the inspection station may be dictated by part characteristics or size, but it is equally likely that the location may depend on inspection equipment requirements or economic factors. Temperature, humidity, vibration, dust, and corrosive fumes are examples of environmental factors that can affect the performance of inspection equipment. Therefore, the inspection equipment must be able to withstand the effects of the operating environment and still perform at the desired accuracy. Thus location of the inspection station is one of many factors that must be integrated into the decision process. A discussion of various locations follows:

1. *At the Machine.* Rework of a part is often impossible after it is unloaded from the machine; this makes inspection at the machine mandatory. A small batch size may render a separate inspection station uneconomical and thus also dictate inspection at the machine.

2. *In the Inspection Department.* When the required inspection equipment is relatively large and heavy or when it requires an operating environment different from that of the shop floor, parts may have to be transported to and inspected in separate inspection facilities. Also when parts are produced in low or moderate

Downloaded from http://www.everyspec.com

TABLE 2-1. CROSS-REFERENCE TABLE—ELEMENTS AND INSPECTION METHODS

Element	Inspection Method	Par.	Remarks
1. Length	Template Gage, Length Gage	7.6	
2. Diameter (Internal)	Plug Gage	7.2	
	Dial Bore Gage (Portable comparators for internal diameters)	9.5.2.2	Commercially available adjustable gage
3. Diameter (External)	Ring Gage	7.3	
	Snap Gage	7.4	
	Dial Snap Gage	9.5.2.1	
	Plate Comparator	9.5.1.2	
4. Radius (Internal and external)	Template Gage	7.6	
5. Chords and Arcs	Template Gage	7.6	
6. Rounded Ends and Corners	Template Gage	7.6	
7. Profiles with Arcs	Template Gage	7.6	
8. Irregular Profiles	Template Gage	7.6	
9. Symmetrical Profiles	Template Gage	7.6	
10. Slotted Holes	Flat Plug Gage	7.2.1.2	
11. Counterbored, Countersunk and Counterdrilled Holes	Plug Gage	7.2	
12. Spot Faces	SME only		
13. Machining Centers	Plug Gage and SME	7.2	
14. Chamfers	Template Gage	7.6	
15. Keyways	Key Slot Gage	8.4	
16. Knurling	SME only	8.5	
17. Rods	Ring Gage	7.3	
	Snap Gage	7.4	
18. Tubing and Pipes	Plug and Ring or Snap Gage	7.2, 7.3, 7.4	
19. Screw Threads (Internal)	Thread Plug Gage Indicating Plug Gage	8.2.1	Length of thread is a very important measurement.
20. Screw Threads (External)	Thread Ring Gage	8.2.2	Length of thread is a very important measurement.
	Thread Snap Gage	8.2.3	
	Indicating Thread Gage	6.3.4	
	Ring Snap Thread Comparator	6.3.4	
21. Surface Texture	Comparator Blocks		
22. Gears	SME only	6.2	
23. Splines (Internal)	Spline Plug Gage	8.3.1	
24. Splines (External)	Spline Ring Gage	8.3.2	

(cont'd on next page)

Downloaded from http://www.everyspec.com

TABLE 2-1. (cont'd)

Element	Inspection Method	Par.	Remarks
25. Angles	SME only		
26. Perpendicularity	SME only		
27. Location	True Position Gage	7.7	
28. Small Items	Optical Projection	3.5.2	
29. Depth	Flush Pin	7.5	

NOTES:
1. Not all product elements or features can be measured by Standard Measuring Equipment (SME). Special measuring equipment must be developed to measure some product elements or features.
2. Gages are limited in size only by handling inconvenience, manufacturing limitations, dimensional instability, and costs.
3. Accuracy and reliability of gaging depends on gage manufacturing tolerance, quality control, and gage maintenance and calibration.

quantities but in large variety, specialized inspection methods may not be economical. In such situations a centrally located inspection station with a variety of capabilities is most suitable.

3. *In the Assembly Area.* Inspection may have to be performed in the assembly area just prior to the assembly operation to facilitate and insure a selective fit. For example, inspection in the assembly area might be preferred when close-toleranced parts produced in small quantities are fitted onto high-cost assemblies. Even when the production quantity is large, if individual part selection is critical to the performance of the assembly, it is advisable to locate the inspection equipment in the assembly area.

4. *In the Receiving Department.* Subcontracted and vendor-supplied items may be inspected in the receiving department before acceptance and/or use.

2.3.1.4 Type of Construction

Inspection equipment may be constructed in several basic arrangements, each of which has certain advantages. Depending on the size of the feature, method of inspection, and durability required, solid, segmented, or adjustable inspection equipment may be appropriate. Solid equipment items, made of one-piece construction, are the most durable, but they are limited to small sizes because of weight considerations. Because it weighs substantially less than an equivalent solid gage, segmented inspection equipment may be desired for large dimensions. A segmented gage has a segmented or discontinuous gaging surface, and inspection is performed by rotating or advancing the gage to make more than one observation. For example, a segmented thread ring gage contacts only approximately 75% of the thread circumference, and the gage is advanced along the entire length of the thread to perform the inspection. Adjustable inspection equipment allows a range of measurement.

2.3.1.5 Other Physical Considerations

Other important considerations in the selection of inspection equipment include required operator skill, durability (resistance to wear and tear), repairability, and weight (ease of use).

2.3.2 ECONOMIC CONSIDERATIONS

2.3.2.1 Quantity of Parts to Be Inspected

The quantity of parts to be inspected largely determines whether general-purpose or specially made equipment is more advantageous. Unless inspection quantities are large, the cost of inspection per part with general-purpose inspection equipment is usually lower because such equipment can be used for measuring a wide range of dimensions and characteristics. Special-purpose inspection equipment, however, may be limited to inspecting either a single dimension or a very small range of dimensions. Thus large inspection quantities are necessary to justify the use of expensive special-purpose inspection equipment.

Downloaded from http://www.everyspec.com

TABLE 2-2. CHARACTERISTICS AND APPLICATIONS OF STANDARD AND SPECIAL MEASURING EQUIPMENT

Inspection Device	Size Range English	Size Range SI	Accuracy English	Accuracy SI	Par.	Common Uses	Remarks
1. Tape	0-100.0 ft	0-30.0 m	1/16 in.	1.0 mm		Lengths	
2. Steel Rule	0-144 ft	0-1200.0 mm	0.01 in.	0.5 mm	3.2.1	Lengths	
3. Depth Gage	0-6.0 in.	0-150.0 mm	1/64 in.	0.5 mm	3.2.1	Depths	
4. Depth Gage With Vernier	0-40.0 in.	0-1000.0 mm	0.001 in.	0.02 mm	3.2.1	Depths	
5. Depth Gage With Digital Indicator	0-40.0 in.	0-1000.0 mm	0.0001 in. to 0.001 in.	0.001 mm to 0.01 mm			
6. Height Gage	0-72.0 in.	0-1500.0 mm	0.001 in.	0.5 mm	3.4.3	Heights, diameters	
7. Height Gage With Vernier	0-72.0 in.	0-1500.0 mm	0.001 in.	0.02 mm	3.4.3	Heights, diameters	
8. Height Gage With Dial Indicator	0-100.0 in.	0-250.0 mm	0.001 in.	0.02 mm	3.4.3	Heights, diameters	
9. Height Gage With Digital Indicator	0-10.0 in.	0-250.0 mm	0.001 in.	0.02 mm		Heights, diameters	
10. Calipers (Inside and Outside)	0-6.0 in.	0-150.0 mm	1/64 in.	0.5 mm		Lengths, internal and external diameters	
11. Calipers With Vernier, (Inside and Outside)	0-120.0 in.	0-1600.0 mm	0.0001 in.	0.02 mm	3.2.5	Lengths, internal and external diameters	
12. Calipers With Digital Indicators	0-8.0 in.	0-200.0 mm	0.0005 in.	0.01 mm		Internal and external diameters	
13. Inside Micrometer	0-294.0 in.	0-2650.0 mm	0.001 in.	0.01 mm	3.2.4	Internal diameters, recesses	
14. Outside Micrometer	0-96.0 in.	0-2400.0 mm	0.001 in.	0.01 mm	3.2.4	Thicknesses, external diameters	
15. Outside and Inside Micrometer With Vernier	0-12.0 in.	0-300.0 mm	0.0001 in.	0.002 mm	3.2.4	Thicknesses, internal and external diameters	
16. Plain Protractor	0-180 deg. Rule length = 6.0 in.	0-180 deg. Rule length = 150.0 mm	1 deg	1 deg	3.2.2	Angles, lengths	
17. Bevel Protractors	0-180 deg Blade length = 24.0 in.	0-180 deg Blade length = 300.0 mm	1 deg. 1/64 in.	1 deg 0.5 mm	3.2.2	Angles, lengths	
18. Universal Bevel Protractors	0-360 deg Blade length = 6.0 and 12.0 in.	0-360 deg Blade length = 150.0 mm and 300.0 mm	5 min 1/64 in.	5 min 0.5 mm	3.2.2	Angles, lengths	
19. Combination Squares	0-360 deg Blade length = 24.0 in.	0-360 deg Blade length = 600.0 mm	5 min 0.01 in.	5 min 0.5 mm	3.2.3	Angles, lengths Location of centers of cylinders	
20. Squares	Blade length = 6.0-48.0 in.	Blade length 150.0-914.0 mm	1/64 in.	0.5 mm	3.4.7	Perpendicularity	

(cont'd on next page)

Downloaded from http://www.everyspec.com

TABLE 2-2. (cont'd)

Inspection Device	Size Range English	Size Range SI	Accuracy English	Accuracy SI	Par.	Common Uses	Remarks
21. Cylindrical Squares	Height = 4.5 in. Diameter = 3.0 in. to Height = 48.0 in. Diameter = 12.0 in.	— —	Concentricity 0.0001 in. to 0.0002 in. Squareness 0.001 in./ft	—	3.4.7	Perpendicularity	
22. Direct Reading Cylindrical Squares	Height = 4.5 in. Diameter = 3.0 in. to Height = 48.0 in. Diameter = 12.0 in.	— —	Concentricity 0.0001 in. to 0.0002 in. Squareness 0.001 in./ft	—	3.4.7	Perpendicularity	
23. Mechanical (Dial) Comparator	Base = 8.0 in.×9.0 in. Vertical Capacity = 9.25 in.	Base = 20.52mm× 228.0 mm Vertical Capacity = 29.2 mm	0.001 in.	0.01 mm	9.5	External diameters, profiles	
24. Optical Comparators	9.0 in.×12.0 in. 360 deg	228.6 mm×304.8 mm 360 deg	0.00005 in. 1 min	0.001 mm 1 min	6.3.3	Profiles, angles, forms, lengths	
25. Toolmaker's Microscopes	2.0 in.×6.0 in.	50.0 mm×150.0 mm	0.00005 in.	0.001 mm		Lengths, angles, position	Equipped with a micrometer head and digital indicator
26. Coordinate Measuring Machines	x = 28.0 in. y = 28.0 in. z = 18.0 in. to x = 76.0 in. y = 46.0 in z = 32.0 in.	— —	±0.0002 in. to ±0.0008 in.	±0.005 mm to ±0.02 mm			Repeatability English ±0.0002 to ±0.0004 in. SI ±0.0005 to ±0.01 mm Resolution 0.0001 in. or 0.002 mm
27. Thread Micrometer	0-6.0 in. PD and 3.5-64 in. TPI	0-50.0 mm PD and 0.4-7.0 mm pitch	0.001 in.	0.01 mm	6.3.1	Screw thread	PD = pitch diameter TPI = threads per inch
28. Ballpoint Thread Micrometers	Same as outside micrometers		0.001 in.	0.01 mm	6.3.2	Screw thread	Ballpoints are mounted on regular outside micrometers
29. Indicating Instruments for Threads	0-4.0 in. PD	—	0.0001 in.	0.003 mm	6.3.4	Screw threads	PD = pitch diameter
30. Surface Plates (Cast Iron)	8.0 in.×10.0 in. to 48.0 in.×144.0 in.	—	Flatness 0.0001 to 0.0009 in.	—	3.4.1	Reference surface for open setups	
31. Surface Plates (Granite)	8.0 in.×12.0 in. to 72.0 in.×144.0 in.	—	Flatness 0.00005 to 0.004 in.	Flatness 0.0012 to 0.1016 mm	3.4.1	Reference surface for open setups	
32. Gage Blocks	0.01-24.0 in.	0.5-500.0 mm	—	±1-10 μin.	—	3.4.2	Setting up products for linear dimensions

(cont'd on next page)

Downloaded from http://www.everyspec.com

TABLE 2-2. (cont'd)

Inspection Device	Size Range English	Size Range SI	Accuracy English	Accuracy SI	Par.	Common Uses	Remarks
33. Angle Gage Blocks	0-99 deg	0-99 deg	0.25 s	0.25 s	3.4.2	Setting up products for angular dimensions	
34. Granite Block or Squares	6.0 in. × 6.0 in. × 6.0 in. to 18.0 in × 18.0 in × 18.0 in.	150.0 mm × 150.00 mm × 150.0 mm to 450.0 mm × 450.00 mm × 450.0 mm	Surface finish 0.000025 in./ 6.0 in. Dimensions within 1/16 in.	Surface finish 0.0006 mm/ 150 mm Dimensions within 1.6 mm	3.4.7	Setting up and supporting products in open setups	
35. Bar Parallels	6.0(L) in. × 1.0(W) in. × 0.25(H) in. to 12.0(L) in × 1.5(W) in × 3.0(H) in.	—	Dimension Tolerance ± 0.0002 in. Parallelism 0.0001 to 0.0002 in.	—	3.4.4	Supporting and setting up products in open setups.	
36. Box Parallels	6.0(L) in × 4.0(W) in. × 4.0(H) in. to 6.0(L) in × 14.0(W) in. × 16.0(H) in.	—	Surface finish 0.0005 in. Parallelism 0.00075/6.0 in. Squareness 0.0005 in./6.0 in.	—	3.4.4	Supporting and setting up of products in open setups	L = length W = width H = height
37. Tapered Parallels	0.125-2.25 in.	—			3.4.4	Accessories for measuring internal diameters, widths and parallelism of slots, center distances of holes, and for layout work.	
38. Straight Edges	12.0(L) in × 1.5(W) in. × 0.25(T) in. to 120.0(L) in. × 6.0(W) in. × 0.75(T) in.	—	Parallelism and straightness 0.0001-0.0010 in.	—	3.4.8	Straightness	L = length W = width T = thickness
39. Planer Gage	0-10.25 in.	—	Length tolerance 0.0002 in.	—	3.4.10	Accessory in open setup measurements; provides reference surfaces at various heights.	Size range given is with auxiliary extension.
40. Angle Iron	40(L) in × 3.75(W) in. × 5.0(H) in.	—	—	—	3.4.5	Open setup accessory provides vertical resting and clamping surface for product	
41. Universal Right Angle Irons	9.0(L) in. × 8.0(W) in. × 16.0(H) in.	—	Squareness and Parallelism 0.002 to 0.003 in.	—	3.4.5	Open setup accessory provides vertical resting and clamping surface for product	
42. Slotted Angle Irons	40(L)in. × 5.0(W)in. × 5.5(H)in. to 16.0(L) in. × 20.0(W) in. × 18.0(H) in.	—	Squareness 0.0005 in./6 in.	—	3.4.5	Open setup accessory provides vertical resting, clamping surface for product; additionally, has slots for clamping.	

(cont'd on next page)

Downloaded from http://www.everyspec.com

TABLE 2-2. (cont'd)

Inspection Device	Size Range English	Size Range SI	Accuracy English	Accuracy SI	Par.	Common Uses	Remarks
43. Measuring Irons	6.0(L) in. × 2.5(W) in. × 12.5(H) in. to 8.0(L) in. × 4.0(W) in.	—	Squareness between vertical and horizontal faces 0.002 in./ft Parallelism within 0.0003 in.	—	3.4.5	Open setup accessory provides a vertical reference surface	
44. Toolmaker's Knee	3.0(L) in. × 2.5(W) in. × 4.0(H) in.	—	Squareness and Parallelism within 0.0001 in.	—	3.4.5	Open setup accessory provides vertical reference surface	
45. Toolmaker's Adjustable Knee	10.0(L) in. × 7.0(W) in. × 9.0(H) in. to 10.0(L) in. × 24.0(W) in. × 18.0(H) in.	—	Squareness = 0.0003 in./6.0 in.	—	3.4.5	Open setup accessory provides adjustable reference surface	
46. V Blocks	1 3/8 in. × 1 3/8 in. × 1 1/8 in. to 8.0 in × 8.0 in. ×. 8.0 in. Product capacity = 0.75 in. to 6 3/8 in. diameter	—	Squareness/ Parallelism of sides 0.0002 in. Parallelism and squareness of grooves with sides 0.0003 in.	— —	3.4.6	Location of round products for inspection	
47. Sine Bars	Center distance between rollers = 3.0-20.0 in.	—	Flatness 0.00005 to 0.0002 in. Tolerance on center distance 0.0001 to 0.0004 in.	—	3.4.9	Accurate angle measurements	
48. Calipers	0-36.0 in.	—	—	—	3.3.1	Transfers dimensions	
49. Dividers	0-24.0 in.	—	—	—	3.3.2	Transfers dimensions	
50. Beam Trammels	Beam Length = 20.0 in.	—	—	—	3.3.3	Transfers dimensions	
51. Split Sphere Gages	0-0.5 in.	—	—	—	3.3.4	Transfers dimensions	
52. Telescoping Gages	0-6.0 in.	—	—	—	3.3.4	Transfers dimensions	
53. Optical Flat	Diameter = 10.0 in.	—	1 μin.	—	4.2.1.3	Flatness, taper	
54. Autocollimator	±5 min	±5 min	0.2 s	0.2 s	4.2.2.1	Angles	
55. Automatic Autocollimator	±100 s	±100 s	0.2 s	0.2 s	4.2.3.1	Angles	
56. Alignment Telescope	Displacement ±0.05 in.	Displacement ± 1.2 mm	0.001 in.	0.02 mm	4.2.2.2	Vertical and horizontal displacement	Equipped with micrometer
57. Automatic Alignment Telescope	Displacement = 3.4-34 min		—	Resolution 10^{-6} m at 1.0 m	4.2.3.2	Horizontal and vertical displacement	
58. Theodolite	Field of view = 29 ft at 1000 ft		1 s	1 s	4.2.2.3	Angles	Equipped with digital indicator

(cont'd on next page)

Downloaded from http://www.everyspec.com

TABLE 2-2. (cont'd)

Inspection Device	Size Range English	Size Range SI	Accuracy English	Accuracy SI	Par.	Common Uses	Remarks
59. Sight Level	Field of view = 55 min at infinity		1 s	1 s	4.2.2.4	Vertical displacement	
60. Alignment Transit	Field of view = 50.5 min at infinity		1 s	1 s	4.2.2.5	Vertical displacement	
61. Automatic Alignment Polarimeter	3.4-34 min	3.4-34 min	0.2 s	0.2 s	4.2.3.3	Rotation about line of sight	
62. Laser Range Finder	60.0 mi	100.0 km	1 in 10^6 parts	1 in 10^6 parts	4.2.3.5	Distance	
63. Automatic Optical Probe	3.0 ft	—	1%	—	4.2.3.6	Distance	
64. Laser Alignment Device	±0.1 in.	—	0.001	—	4.2.3.7	Alignment	
65. Distance Measuring Interferometer	150.0 ft	—	1 in 10^6 parts	—	4.2.4	Distance	
66. Angle Measuring Interferometer	0.02 s (minimum)	—	0.005% for 40 min	—	4.2.4	Angles	
67. Interferometer System	Aperture = 0.5-32.0 in.	—	For plano testing 1/20λ; for spherical testing 1/10λ; for cylindrical testing 1/4λ	—	4.2.4	Optical component inspection	λ = wave length of light source λ = 24.9 μin. for HeNe system
68. Fiber Optic Probe	4.5 min 1.0 in.	4.5 min.	±2 μin.	—	4.2.5.1	Diameters, face dimensions, flatness, displacement	
69. Photodiode Array	1.0 in.	—			4.2.5.2	Lengths, position, forms	
70. Image Dissector	Diameter of field of view = 1.0 in.	—	±0.0001 in.	—	4.2.5.3	Lengths, position, forms	
71. Scanning Laser Beams	0.01-8.0 in.	—	±0.00001 to ±0.0005 in.	—	4.2.5.4	Lengths, diameters, position, ovality	
72. Pneumatic Comparator	Size Variation = 0.1 in.	—	0.00012 in.	—	4.3	Lengths, diameters, position, form	
73. Eddy Current	0.0005 to 0.017 in.	—	2 to 49%	—	4.4.1	Plating thickness, diameters, coating thickness	
74. Ultrasonic	0.004 in. of copper brass to several ft of soft material	—	0.02 to 1%	—	4.4.2	Thickness, coating thickness	
75. Penetrating Radiation	0.000015 in. aluminum to 1.0 in. of steel	—	± 1%	—	4.4.3	Thickness	
76. Magnetic Field	100.0 in.	—	10%	—	4.4.4	Thickness	

(cont'd on next page)

Downloaded from http://www.everyspec.com

TABLE 2-2. (cont'd)

Inspection Device	Size Range English	Size Range SI	Accuracy English	Accuracy SI	Par.	Common Uses	Remarks
77. Electric Current	3.0-in. thick cast iron	—	2.5 to 5%	—	4.4.5	Wall thickness	
78. Lens Bench			±0.0004 in.	—	5.2.1	Focal length	
79. Focal Collimator	Diameter = 8.0 in.	—	±0.0004 in.	—	5.2.1	Focal length	
80. Spherometer	Diameter = 1.0-3.0 in.	—	2%	—	5.2.2.3	Radius of curvature	
81. Test Glass			λ/5	—	5.2.2.4	Radius of curvature	λ = wave length of light source
82. Interferometer	—	—	0.01-0.00004 in.	—	5.2.2.6	Radius of curvature	
83. Michelson Interferometer	—	—	±0.00004 in.	—	5.2.3	Thickness	
84. Precision Spectrometer	—	—	1 s	—	5.2.4.1	Angles	
85. Twymon-Green Interferometer and Comparison Standards	—	—	λ	—	5.2.4.2	Angles	λ = wave length of light source
86. Automatic Collimator and Comparison Standards	—	—	±6 s	—	5.2.4.2	Angles	
87. Multiple Beam Interferometer	—	—	0.039-0.236 μin.	—	5.2.5	Film thickness	
88. Ellipsometer	—	—	Few thousandths λ of light	—	5.2.5	Film thickness	
89. Beta Backscatter	—	—	±1%	—	5.3.1	Elastomeric material thickness, paper thickness, coating thickness	
90. Presser Foot and Anvil	—	—	1%	—	5.3.2.1	Fabric thickness	
91. Shirley Yarn Diameter Projector	—	—	0.001 in.	—	5.3.4.1	Thread diameter	
92. Eberhardt Fine Thread	0.5-10.0 μin.	—	±4%	—	5.3.4.2	Thread diameter	
93. Coulometric Method	0.00003-0.002 in.	—	±10%	—	5.5.1	Metallic coating thickness	
94. Cross Section Method	Not less than 0.003 in.	—	Greater of ±10% or ±0.00004 in.	—	5.5.2	Metallic and oxide coating thickness	
95. Electromagnetic Methods	—	—	2 to 15%	—	5.5.3	Coating thickness for metal substrate	

(cont'd on next page)

Downloaded from http://www.everyspec.com

TABLE 2-2. (cont'd)

Inspection Device	Size Range English	Size Range SI	Accuracy English	Accuracy SI	Par.	Common Uses	Remarks
96. Magnetic Methods	—	—	3 to 49%	—	5.5.3	Film thickness of nonmagnetic coating on ferrous base, nonmagnetic coating thickness on magnetic base metal, nickel coating thickness	
97. X-Ray Spectrometry	—	—	±10%	—	5.5.5	Metallic coating thickness	

NOTES:
1. Unless otherwise stated, the accuracies of direct-reading measuring equipment in this table are the smallest graduations on their scales.
2. For nonmeasuring equipment, the accuracies stated are the allowable deviations from the specified size or manufacturing tolerances.
3. Wherever an accuracy range is specified, the lower accuracy is associated with the larger size equipment and the higher accuracy relates to smaller size equipment.
4. The size ranges and accuracies in English and SI units stated in this table are not direct conversions. Equipment with these size ranges and accuracies are commercially available.

Downloaded from http://www.everyspec.com

The number of parts to be inspected is determined from the inspection plan contained in the quality assurance provisions of the specification. Although 100% inspection may be appropriate for short-run, job shop, or high-cost products, inspection of a statistically valid sample of high-production runs of low-cost items may be sufficient. In the latter situation the cost of 100% inspection could outweigh the cost of erroneously rejecting a small fraction of acceptable parts or accepting a small fraction of rejectable parts. Such economic factors are considered in the development of the inspection plan; therefore, the plan may call for a 100% inspection, a sampling inspection, or a combination thereof.

A sampling inspection plan may be incorporated into the specification by reference to documents such as MIL-STD-105, *Sampling Procedures and Tables for Inspection by Attributes* (Ref. 4), or MIL-STD-1235, *Single and Multilevel Continuous Sampling Procedures and Tables for Inspection by Attributes—Functional Curves of the Continuous Sampling Plans* (Ref. 5), or may be unique for the inspection prescribed. Because the quantity of parts to be inspected usually determines the type of inspection equipment selected and is also an important factor in the design of that equipment, the inspection equipment designer must review the inspection plan carefully. The plan may also contain other information—such as the referee procedure or a requirement that different inspection procedures be used depending upon existing conditions—that the inspection equipment designer must consider. For example, the plan may require that a 100% inspection be conducted if more than a specified number of parts are rejected within a certain time and that the 100% inspection continue until the rate of rejection falls to a predetermined level. Provisions must be made to accommodate all the specified conditions.

2.3.2.2 Time Required for Inspection

Speed of inspection can significantly affect inspection equipment design. Automated or computer-aided inspection may be justified for fast production runs or large inspection quantities. Conversely, for slow runs or small inspection quantities, the use of general-purpose measuring instruments may be more appropriate; however, in-between cases may warrant special gages or special-purpose equipment.

2.3.2.3 Useful Life of Inspection Equipment

If a large quantity of parts is to be inspected, the higher cost of longer lasting inspection equipment may be justified. The life of inspection equipment can be prolonged by using harder materials or harder coatings on the wearing surfaces or through design of more durable equipment. When the wear of all elements is not uniform, the life of inspection equipment can be extended with construction of a multiple-piece gage. A multiple-piece gage, i.e., a gage for inspecting several part elements simultaneously, is constructed so it can be disassembled. When a particular element wears out, it can be replaced and the useful life of the entire assembly prolonged. If, however, all elements of the gage wear uniformly and need to be replaced at the same time, the only savings achieved would be through reuse of the nonfunctional parts of the gage. Thus, in this instance the concept may not be advantageous. Also it may be more difficult to build and assemble a multiple-piece gage with the desired accuracy than it is to make several one-piece gages.

2.3.2.4 Percentage and Costs of Errors

The reliability of inspection equipment becomes more important as the cost of inspection errors increases. For example, the costs of errors could be very high if the fitting of a defective part renders a high-cost assembly unusable, especially if rework is impossible. For low-cost parts on low-cost assemblies, the proportion of allowable errors may be greater because the replacement of parts is not expensive. Even the inspection of low-cost parts can be critical, however, if failure of the part could result in injury or death. Thus it is very important to consider the reliability of the inspection equipment before it is selected.

2.3.2.5 Effect of Engineering Changes

Engineering changes after the release of drawings for manufacture will impact inspection costs profoundly, especially if special-purpose inspection equipment is required. A relatively small change in a dimension can render such inspection equipment completely useless and add to the total cost of the product. Therefore, in cases where many engineering changes are likely, general-purpose equipment with greater versatility and wider

Downloaded from http://www.everyspec.com

dimensional ranges should be selected because this equipment often can accommodate engineering changes at little or no additional cost.

2.3.2.6 Availability of Commercial Inspection Equipment

If commercially available equipment can be used for a particular inspection requirement, inspection equipment costs are usually lower than they would be if specially designed inspection equipment were used. For this reason, Army policy dictates the use of commercial inspection equipment in preference to specially designed equipment (Ref. 1).

2.4 DESIGN PHILOSOPHY AND POLICY

2.4.1 FUNDAMENTAL RULES OF DESIGN

Because the established tolerance represents the extreme limits of acceptability for the requirement specified, any product that falls within the limits is acceptable, and any product that falls outside the limits is unacceptable. As a matter of policy, the acceptability of a product must be proven, but an indication of nonconformance is sufficient for its rejection. When approved inspection equipment is properly maintained and used within its specified calibration limits, any part accepted by that equipment has been proven to be within its specified limits. However, because the tolerance limits on drawings are always absolute and no allowances are made for the tolerances and wear allowances of the inspection equipment, rejection of a part by that equipment does not necessarily prove that it is not within specified limits. Therefore, manufacturers often use slightly smaller tolerances for in-process inspections than those specified. This guarantees the acceptance of a larger number of parts during final inspection.

As a practical matter, initial rejection of a certain number of acceptable parts is to be expected. Use of inspection equipment with greater accuracy may prove some of these parts to be acceptable. The reinspection of an initially rejected part is known as a "referee decision". A typical referee decision clause is contained in par. 4.3.3.3, MIL-A-002550, *Ammunition, General Specification for**, (Ref. 6):

"*Referee decisions.* In the event that gage or other equipment accuracy limits operate to reject any part, it shall be the responsibility of the supplier to satisfy the Government Quality Assurance Representative, using a mutually agreed upon procedure, that the part is in fact within the limits permitted by the component tolerance specified. When it is demonstrated that the part conforms thereto, it shall be accepted, provided it otherwise complies with all other applicable requirements.".

It is necessary to introduce the concept of functional gage design to understand the design principles that follow. Because the sole purpose of dimensions and tolerances is to insure that a part functions satisfactorily, this concept seeks to inspect parts functionally through the use of a gage that simulates the mating part and uses fixed elements, such as pins and bushings, to inspect individual part elements. Because functional gages inspect several requirements simultaneously, the number of gages needed is reduced. Functional gaging methods also have a beneficial effect on practical tooling, in-process gaging requirements, and gage design. For example, when used in conjunction with positional tolerancing, true position dimensioning, and MMC callouts, functional gaging tends to reduce the cost of inspection. This concept is discussed further in Chapter 7.

2.4.1.1 Principles of Product Design That Affect Gage Design

The principles of product design that affect gage design follow:

1. Because it is impossible to produce finished parts that are exactly alike, part tolerances are specified to establish limits to control the variation in finished part features.

2. Gage designers should not have to make arbitrary decisions regarding size and location of gage elements; all dimensions should be readily extractable from product drawings or specifications. Gage designers should be involved only in designing a gage structure that properly aligns and relates the fixed gaging elements and in tolerancing the size and location of these elements within the acceptable limits.

*A limited coordination document prepared by the US Army Armament Research, Development, and Engineering Center.

Downloaded from http://www.everyspec.com

3. The number of datum reference frames, i.e., three mutually perpendicular part datum features, should be minimized because any increase in the number of datum reference frames will increase manufacturing and inspection costs.

4. The datum reference frame specified on the drawing should be used for manufacturing and inspection. When a feature is selected as a datum, it must be of sufficient size to be used as a datum during manufacture and inspection.

5. Product tolerancing concepts—MMC, RFS, and least material conditions (LMC)—significantly affect gage design. The tolerancing concept specified on the product drawing dictates gage element sizes and the method of locating the datum feature for inspection. For example, fixed-size gage elements can be used for datum and related features when MMC or, in most cases, when LMC is specified. In contrast, fixed-size gage elements cannot be used with the RFS concept, and expanding devices may be required to locate the centers of datum features.

2.4.1.2 Principles of Gage Design

A discussion of the principles of gage design follows:

1. The fundamental rule governing the design of inspection equipment is that the inspection equipment must never accept a product that exceeds the specified limits. Because it is impossible to manufacture inspection equipment without tolerances, the possibility of error exists because of those tolerances. The extreme limits of product acceptability must be modified by subtracting this potential error from product tolerances to insure adherence to this fundamental rule. The end result is that the inspection equipment will not accept a product that exceeds the specified limits, but it may reject products that are within, but close to, those limits. This is often called tolerancing the inspection equipment in the direction of safety. When wear allowances are applicable, they are also applied in the direction of safety. See MIL-A-2550, par. 4.3.3.1, for additional information on wear allowance and tolerance.

2. The datum reference frame specified on the drawing must be used for inspection. This insures correct inspection of the specified dimensions by preventing introduction of additional errors due to the change of datum reference frame.

3. A fixed element functional gage should simulate the mating part at the part/gage interface to insure that the part assembles properly with the actual mating part.

4. As many related dimensions as are possible or convenient should be incorporated in the "Go" gage, whereas separate "Not Go" gages should be provided for each dimension (Taylor's Principle).

5. All functional gage elements should "Go" into or over part features concurrently, if possible, because all actual part features—bolts, pins, etc.—must be in place concurrently in the mating parts.

6. Functional gage fixed elements must be located at basic locations (true position) of a part feature. Especially when an MMC callout is used, a gaging element of fixed size and location automatically will allow hole location and perpendicularity to vary as finished holes vary in size.

7. Because the available clearance is a minimum at MMC, a receiver gage is functional only when it physically simulates the MMC mating part. Inspection at this condition guarantees proper assembly with the actual mating part. (A *receiver gage* is a gage that receives the part and insures that the part is within specified limits. The name applies only to gages that consist primarily of internal surfaces or portions of internal surfaces arranged to inspect part dimensions.)

2.4.2 MINIMIZATION OF REQUIRED SKILL AND EFFORT

All variables that can adversely affect the accuracy of the inspection results must be controlled to the maximum extent possible in order to conduct the inspection properly. The inspection equipment designer must create a design that will minimize the effect of the uncontrollable variables on the inspection performed. Although the operator or user of the inspection equipment must be regarded as one such uncontrollable variable, the designer may assume that the operator will exercise reasonable care in the use of the equipment. The accuracy of the inspection, however, should not depend on a particular operator skill or talent. Simplicity of operation and elimination of procedures requiring operator judgment should be regarded as primary design objectives.

Downloaded from http://www.everyspec.com

2.4.3 MINIMIZATION OF EQUIPMENT SOPHISTICATION

The goal of inspection equipment design is to specify the least-cost combination of equipment and procedures that will accomplish the required inspection adequately and completely. Equipment sophistication is one cost component and is added to reduce inspection time, to permit simultaneous inspection of multiple features, or to analyze the detected error—any of which could prove advantageous under certain circumstances, but at added cost. For example, analysis of the error could assist the production contractor by detecting tool wear, which would enable him to correct a machine setting before product limits were exceeded. Analysis of errors may also be advantageous to the Government in the areas of product development or product improvement. Increased sophistication often decreases versatility, however, and the advantages of sophisticated equipment can be nullified through design or production changes. Therefore, inspection equipment should be as simple as possible, and other features should be added only to reduce inspection costs.

2.4.4 DESIGN OF INSPECTION EQUIPMENT FOR REGARDLESS OF FEATURE SIZE (RFS) TOLERANCES

RFS is a term used to indicate that a geometric tolerance or datum reference applies at any increment of the feature size within its size tolerance (Ref. 3). As such, the form or positional tolerance is independent of the finished size of the feature. Also when used as a modifier for a position control callout, RFS can be applied to the datum feature surfaces and to the other features whose axes or center planes are controlled by geometric tolerances.

With this concept the actual axis of a part datum feature must be used for inspection regardless of the part datum finished size of the feature. Therefore, this type of inspection equipment usually is characterized by expanding devices, tapered locators, vee blocks, spring-loaded devices, or other units capable of locating the centerline or central plane of the datum feature. Because the position of the datum can vary, fixed elements are not appropriate for ascertaining the location of other features. Therefore, when a positional tolerance is independent of feature size, these designs frequently use dial indicators, air gages, or other devices capable of versatile measurement.

It is obvious that inspection equipment designs of this nature would apply to situations in which the callout for positional tolerance directly states the RFS requirement. When no modifier is specified, refer to the dimensioning and tolerancing standard specified on the product drawing.

The basic advantage of the RFS type of inspection equipment design is its ability to perform a measurement accurately and independently of feature size variations. In some cases, such as inspecting for alignment of diameters of large components on a common axis, RFS is the only practical inspection method. Also designs for RFS callouts usually employ dial indicators, which provide easy recalibration because wear adjustments are an inherent part of their design. This ease of recalibration also provides an easy means of compensating for revisions in product size or tolerance requirements. Such revisions may result from product redesign or inclusion of permissible product wear limits to be used with maintenance or to rebuild program inspections. When dial indicators or similar units are incorporated into the design, RFS inspection equipment can determine not only whether or not the product is within its specified limits but also the magnitude and direction of any error that exceeds those limits. This concept is particularly advantageous in the operating and support phase of the life cycle, in which the product rebuild design may provide for adjustment to compensate for wear. Under these circumstances RFS is the only appropriate tolerancing concept.

The disadvantage of the RFS concept is that the cost of the required inspection equipment is generally higher, as is the level of operator skill needed. Also, an infinite range of gage element sizes would be required to gage a part dimensioned with an RFS modifier, and this modifier does not allow use of fixed-size gaging elements.

2.4.5 DESIGN OF INSPECTION EQUIPMENT FOR MAXIMUM MATERIAL CONDITION (MMC) TOLERANCES

MMC is the condition in which a feature contains the maximum amount of material within the stated size limits. Thus it is either the maximum specified size of an external feature or the minimum specified size of an internal feature. When assembly is involved, the MMC is the most crucial size of a part feature.

Downloaded from http://www.everyspec.com

Geometric tolerances modified with an MMC modifier are variable, and when the size of a feature is anything other than MMC, the stated form or positional tolerance is automatically increased by the amount of the size difference. This fact makes the MMC method more practical than the RFS method because, as the size of the finished hole varies, a fixed-size gaging element will automatically allow the part hole location and perpendicularity to vary. The inspection equipment required to verify MMC requirements usually is of special design and is generally characterized by fixed-size locators and gaging surfaces at fixed locations. Gages designed to inspect this type of callout are alternately known as "Go" composite gages, receiver gages, functional gages, spanner gages, and fixed-size pinhole location gages. The product is acceptable if it mates with the gage without interference.

MMC usually is used to insure noninterference fits between mating parts that require either a positive clearance or a transition fit to assemble properly. The MMC concept can be applied to form, orientation, and location tolerances.

One of the advantages of the gages used to verify MMC requirements is that they are relatively inexpensive to design and fabricate because they normally do not require moving parts. Assembling the product with the gage makes simultaneous inspection of complex relationships possible and thus reduces inspection time. Compensatory tolerance of size and location is automatically interrelated in a manner that does not require operator decision. This feature reduces both the need for operator skill and the possibility of operator error. The absence of precision moving parts and adjustments reduces the need for calibration surveillance. Because a functional gage simultaneously inspects location and the "Go" size when "0" tolerance of form or location at MMC is specified, a separate "Go" gage is not needed. MMC also allows the manufacturer to choose his own working tolerance when he chooses the drill sizes for holes.

The primary disadvantage of the MMC concept is that the gages for large dimensions may be heavy and unwieldy because the gage must fit over or in the features being inspected. For instance, a pin is required to gage the inside of a hole, and a gage to inspect several large holes is likely to be quite heavy. In contrast, an RFS gage need only locate the center or axis of the feature, an action that can be done without contact with the entire surface. Another disadvantage of the MMC concept is that any change to an MMC positional dimension will necessitate a modification in the gage or may render it useless. An RFS gage, on the other hand, may still be useful without modification.

2.4.6 DESIGN OF INSPECTION EQUIPMENT FOR LEAST MATERIAL CONDITION (LMC) TOLERANCES

LMC is the condition in which a feature contains the least material within the stated limits of size, i.e., maximum size of an internal feature (hole diameter) or minimum size of an external feature.

Form or positional tolerances modified by LMC vary with the actual size of the feature. If the feature is finished at its LMC limit of size, the tolerance is limited to the specified value. When the finished size of the feature departs from its LMC limit of size, an increase in the tolerance, equal to the amount of departure, is allowed. The maximum permissible variation is reached when the feature is finished at its MMC limit of size.

Similarly, a datum feature referenced with an LMC modifier implies that it is the axis or center plane of the feature at its LMC limit. When the finished size of the datum feature has departed from LMC, a deviation is allowed between its axis or center plane and the axis or center plane of the datum. In short, additional tolerance of form or position is gained as the feature departs from its LMC, and the amount of this gain equals the departure from LMC.

The LMC concept is rarely used in cases of functional fit. It is specified, however, when MMC fails to provide the desired control and RFS proves too restrictive—e.g., in cases in which wall thickness is critical, in which alignment of critical parts of features is important, and in which play between parts and fixtures must be controlled. Application of functional gaging techniques is relatively more difficult for LMC than for MMC. Functional gaging is discussed further in Chapter 7.

Downloaded from http://www.everyspec.com

2.5 DESIGN AND SPECIFICATION OF INSPECTION EQUIPMENT

2.5.1 SELECTION OF MATERIAL

Selection of the material from which a gage is to be fabricated is a critical step in inspection equipment design because the material selected affects inspection costs not only through initial equipment cost but also through maintenance and replacement costs. Selection of the construction material is often one of the more difficult steps for the gage designer because no guidelines exist to indicate the appropriate material for a particular purpose. Material selection is often a matter of experience and judgment. Fortunately, many requirements can be met with commonly specified materials whose characteristics are well-known. Additional information on the commonly used materials is found in Chapter 7. The subparagraphs that follow describe the more important selection criteria in general terms.

2.5.1.1 Wear Resistance

The required frequency of gage calibration and of rebuilding of wearing surfaces depends in large part on the wear resistance of the surfaces. Wear is a function of the number of parts to be inspected per gage, and the wear resistance—which often can be improved by alloying or heat treating—of any material is directly proportional to its hardness. Depending on their constituent elements, different materials can be hardened to different degrees; these processes are discussed in par. 2.5.3. Because they heat and cool more evenly, uniform sections should be used for gages that must be heat treated. For applications involving nonuniform sections, materials that need limited heat treatment should be specified. Additional wear resistance can be achieved by chromium plating, which is discussed in par. 2.5.2. For very high production extremely hard materials, such as cemented carbide, may be substituted for the wearing surfaces. Although most gaging and wearing surfaces are made of hardened alloy steel, selection of a particular material depends on its final application.

2.5.1.2 Useful Life

Wear is a major factor in determining the useful life of a gage. Chromium plating, cemented carbide surfaces, alloying, and various hardening techniques that increase wear resistance also extend the useful life of a gage. When alloy steel gages wear out, they can be chromium plated and lapped down to size. Depending on the potential need to extend the life of a gage, a material that facilitates rebuilding processes, such as plating, should be selected. Besides wear, however, the life of a gage also depends on the abrasive action of the material being gaged, the condition of surfaces, and the care taken when the gage is used.

2.5.1.3 Thermal Compatibility

All materials change size with changes in temperature, but the degree of thermal expansion or contraction varies with the material. Temperature will not affect inspection results if the workpiece and the inspection equipment are constructed of the same material provided both are in thermal equilibrium. Depending upon the mass, surface area, color, and thermal conductivity, however, a workpiece may take several days to reach equilibrium. If the workpiece and the inspection equipment are of different materials and the equilibrium temperature is not the internationally accepted norm of 68° F, inspection accuracy can be significantly affected unless the temperature effects are considered. Necessary adjustments can be calculated based on the thermal coefficient of expansion. Additional operator care will be required, however, to insure inspection accuracy. Therefore, selection of a material that has the same coefficient of thermal expansion as the workpiece is recommended.

Temperature changes and nonuniform temperatures on the shop floor can be caused by bad ventilation, ill-fitting doors and windows, radiators, heat-generating operations (such as metal cutting), direct sunlight, and shutting off of environmental control units during weekends and holidays. Because measuring instruments are usually small, they have low thermal inertia and are quickly affected by local heating sources. Large measuring equipment is usually made lighter through the use of lightweight alloys. These alloys have high coefficients of expansion and thus are greatly affected by temperature changes. Wood may be used for larger portions of gages to avoid excessive expansion, but wood is dimensionally very sensitive to humidity. Currently, the trend is toward the use of modern composite materials such as carbon-fiber-loaded resins because of their strength, lightweight, and very low coefficients of expansion.

Downloaded from http://www.everyspec.com

2.5.1.4 Weight

Excessively heavy gages can cause operator fatigue. For weight reduction either lighter materials can be used for the entire gage or a composite gage with wearing surfaces made of wear-resistant material and the rest of the gage made of lightweight material can be used. With composite gages, however, care must be taken not to jeopardize the structural integrity of the gage. Also adjustments may be required to compensate for thermal effects.

2.5.1.5 Cost

The ultimate objective in material selection should be to minimize cost without sacrificing the ability to inspect parts at the desired level of accuracy. Selection affects inspection cost per part through raw material cost; cost of manufacturing, machining, and heat treatment; and cost of storage, handling, and protection. Costs over the life of the gage are required in order to determine the true per part inspection cost.

2.5.1.6 Availability

Availability and delivery time must be considered and verified during material selection. If an exotic material is specified that cannot be procured within the available time, all the possible advantages of using that particular material may be nullified.

2.5.2 PROTECTION OF MATERIAL

It is important to protect inspection equipment from the detrimental effects of environmental conditions and wear. Humidity is the principal environmental condition from which the equipment must be protected both while in use and during extended storage periods. Corrosion prevention is discussed in par. 2.5.2.1. The major protection afforded against wear is through plating, which is discussed in par. 2.5.2.2.

2.5.2.1 Corrosion Prevention

Nonfunctioning parts of inspection equipment, such as bases, frames, and handles, should be protected by an enamel paint or similar commercial finish. A finish of black oxide may also be used on nongaging surfaces. Black oxide prevents fingerprints, moderately enhances corrosion resistance, and results in a surface buildup of only 0.000025 in. It should also be applied to all optical staging fixtures to prevent glare. Par. 3.5 of MIL-G-10944, *Gages, Dimensional Control* (Ref. 7), sets forth the minimum requirements for paint and other protective finishes applicable to gages. According to this specification, unless otherwise specified the functional surfaces of basic gages will not require protective finishes. However, functional surfaces usually are plated to prevent corrosion.

If inspection equipment is protected as outlined in the preceding paragraph, the effects of humidity will probably not be a serious concern while equipment is in day-to-day use. If the operating environment is particularly harsh or otherwise corrosive, however, the periodic application of a light coat of oil is advisable. As an additional precaution, precision instruments should not be handled directly because perspiration contains acids that can cause corrosion, and heat transferred from the hands can introduce uneven expansion. For these reasons the use of gloves or tongs should be encouraged wherever possible—particularly during calibration or the transfer of the gage from place to place.

Inspection equipment in storage must also be protected from the effects of humidity. If left exposed to a humid atmosphere, most finished surfaces rust or form oxides, and although this film of oxide is not necessarily visible to the naked eye, it can make a substantial difference in readings taken with precision instruments or gages. A rust inhibitor, rust-preventing coat of oil, or chemically inert material should be applied, and the equipment should be covered to prevent rust or corrosion. Another way to protect the equipment from rust is to control humidity with electric dehumidifiers, silica gel, or calcium chloride.

2.5.2.2 Plating

Chromium is the most widely used material for plating gages because chromium-plated surfaces last 2 to 19 times longer than the best tool steels. Chromium plating is used to increase wear life beyond that attainable by normal hardening techniques, to reconstruct worn-out gages, or to modify gages. The chromium plating

Downloaded from http://www.everyspec.com

process involves deposition of a thin layer of chromium on the surface. The hardness of the base metal should be a minimum of Rockwell C60 to prevent chipping of the plating.

When chromium plating is used as a wearing surface, because of its additional wear resistance, less wear allowance can be specified and greater accuracy is possible. The thickness of chromium plate after grinding to size is usually specified as 0.0001 to 0.0005 in. When chromium is applied as a wear allowance—usually in amounts of 0.00005 to 0.0002 in.—a surface finish of 6 μin. or finer should be specified on the base metal because the plating follows the base metal with high fidelity. This type of plating usually is limited to plug and ring gages. During use, a copper sulfate solution is applied to the gage to indicate when the wear allowance is expended and when it is time to replate the gage because copper will precipitate on any exposed steel but not on a chromium surface.

To salvage or modify a gage, plating thicknesses up to 0.02 in. may be used. Expensive inspection equipment may be refurbished by grinding the worn-out areas, building up the surface with chromium, and then regrinding to size.

One of the outstanding properties of aluminum is the natural formation of a film of aluminum oxide, which has excellent corrosion resistance. The anodizing process, a process that is somewhat the reverse of electroplating, substantially increases the thickness of this protective layer. One of the important advantages of anodizing is that the change in dimension is insignificant, so there is no need to provide any dimensional allowance as there is in conventional electroplating.

2.5.3 HEAT TREATMENT AND ALLOYING

Hardness of gaging surfaces should be specified on the gage drawings. In most cases Rockwell C60 to C63 is specified. In some cases, however, different hardness values are specified because the geometric characteristics of the gage affect the hardenability of gage material such that hardnesses equivalent to Rockwell C60 to C63 cannot be attained. When greater hardness is required, an appropriate material must be selected. Recommended hardness values for various materials used for gages are presented in Chapter 7. Design precautions to aid the heat treating process are shown in Fig. 2-5.

The hardness and internal stability of most materials can be altered by heat treatment. Properties such as hardenability, toughness, and ductility can be increased by alloying. Even though the gage designer is not normally required to specify heat treatment and alloying requirements for gage materials, he should be familiar with the basics of the major processes. Accordingly, a brief discussion of the major heat treatment and alloying processes follows. Additional details can be found in any standard textbook on metallurgy.

Steel is a combination of iron, carbon, and other elements that either exist as impurities or are added to impart certain qualities such as hardness, toughness, or machinability. The two main types of steels are carbon and alloy. Carbon steels contain up to 1.0% carbon, whereas alloy steels contain lesser amounts of carbon (up to 0.7%) as well as elements such as chromium, vanadium, nickel, molybdenum, and tungsten—all of which impart special properties. The crystalline structure of iron and the location of carbon atoms in this crystalline structure together determine the properties of the steel. The three different states of carbon that exist in steel at various temperatures are pearlite, austenite, and martensite. Pearlite is formed by carbon and iron in a fully annealed steel. With further heat treatment the pearlite structure changes to austenite, a solid solution of iron and carbon above the transformation temperature. The martensite structure, which is produced when the steel is cooled quickly from its upper critical temperature range, results in hardening. A slow cooling rate in the quenching media can provide a small amount of retained austenite that can be detrimental to the final required properties.

2.5.3.1 Annealing and Stress Relieving

The purposes of annealing are to soften steel for greater ease in machining, to relieve stresses and hardness resulting from cold working, or to refine the grain and reduce brittleness. Annealing may be performed by one of several methods; the choice depends on the results desired. A discussion of the major methods of annealing follows:

1. *Full Annealing*. In full annealing, steel is heated to about 100 deg F above the critical temperature range, soaked at that temperature for a predetermined time, and allowed to cool very slowly in the furnace.

Downloaded from http://www.everyspec.com

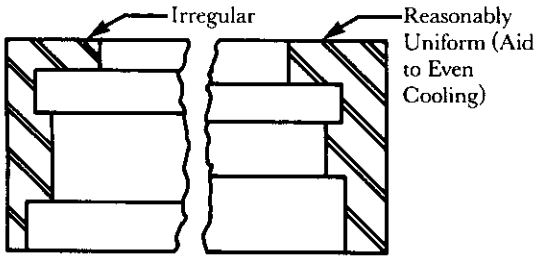

(A) Parts Should be Designed With Uniformity of Section

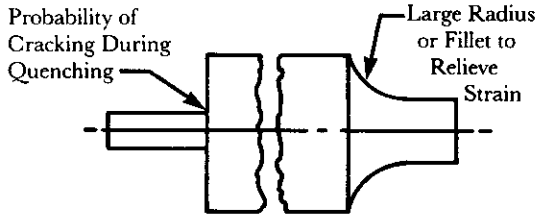

(D) A Light Section Should Not Abruptly Join a Heavy Section

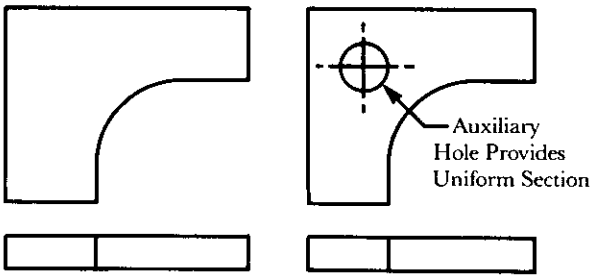

(B) Use Auxiliary Holes to Give Uniform Cooling

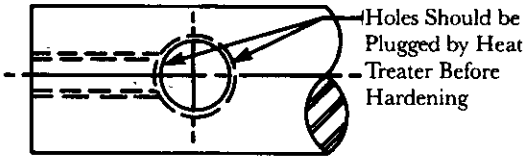

(E) Intersecting Holes Concentrate Strain at Their Junction

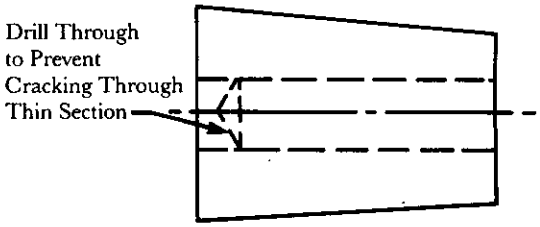

(F) Blind Holes Should be Eliminated Whenever Possible

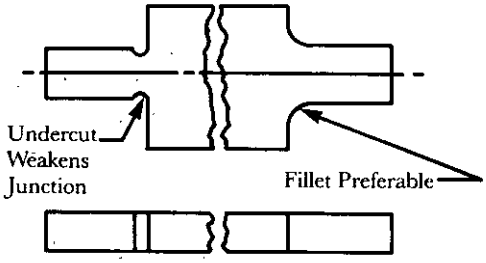

(C) Parts Should be Designed Without Sharp Corners or Undercuts Adjoining Thin Sections

(G) Comparison of Quenching Media for Steel Relative to Cracking

1. Water—Most Severe Hardening Medium
2. Oil—Less Severe
3. Air—Mildest

When thin section or odd-shaped contours cannot be avoided, an advisory note should be added to the drawing to specify oil- or air-hardened tool steel to lessen the possibility of cracking.

Figure 2-5. Design Precautions to Aid Heat Treating

Downloaded from http://www.everyspec.com

This slow cooling rate can also be achieved by placing the steel in insulated boxes. In fully annealed steel, carbon exists as pearlite and the steel is soft, ductile, and free of internal stresses.

2. *Subcritical Annealing*. The purpose of subcritical annealing is to relieve the steel of all internal stresses created when large amounts of metal are removed through machining. This process involves heating steel in containers packed with protective material to just below the critical temperature range and then cooling it at a predetermined rate that depends on the carbon content. The resulting product is practically free of stresses.

3. *Normalizing*. Normalizing is a process to make the steel of proper, uniform, and refined grain size and to relieve stress so that the steel responds well to further heat treatment. It involves heating steel about 100 deg F above its upper critical temperature range, soaking it at that temperature long enough to transform it completely to the austenitic structure, and cooling it to ambient temperature in still air.

4. *Spheroidizing*. The spheroidizing process increases the machinability of high-carbon steel due to the spheroidal condition of the iron carbide. In this process steel is heated to just above the critical temperature range, soaked at that temperature for a predetermined time, cooled to just below the critical range, and held there for a predetermined time. Finally, the steel is cooled slowly to the ambient temperature.

2.5.3.2 Hardening

Hardening is done to increase wear resistance. In steel, carbon is the chief hardening element. Two major hardening methods are full body hardening and case hardening. These methods are briefly discussed in the following paragraphs:

1. *Full Body Hardening*. Full body hardening is a process in which the entire part is subjected to heat treatment to increase its hardness uniformly. Steel is hardened by heating in a furnace to a predetermined temperature (usually the upper critical temperature) and quenching in a proper medium. The rate of cooling determines the hardness of the steel at ambient temperature. The martensite structure, produced when the steel is cooled quickly, makes the steel very hard and strong but brittle. Too fast a cooling rate can also leave internal stresses in the material. Therefore, it is advisable to use the mildest quenching that will cool the steel with sufficient speed to develop the required hardness. The cooling rate also determines the depth of hardening from the gage surface. Alloying elements allow deeper hardening by permitting slower cooling rates. The most commonly used quenches are water, brine, oil, and air. Brine is considered the severest quenching medium because the salt removes the vapor barrier formed when using plain water. A water medium is used primarily for carbon steels and medium-carbon, low-alloy steels. Brine quenching frequently is preferred because it does not form bubbles on material surfaces or leave behind soft spots. Oil is a slower and milder quenching medium and allows for hardening with less distortion and internal stress. Air is the slowest of the quenching mediums. However, if it can produce the required hardness, air is the best cooling medium because it is very uniform and leaves behind the least distortion and internal stress.

2. *Case Hardening*. This process is known as case hardening because a hardened case is formed around the softer core. To harden low-carbon steels, the carbon and/or nitrogen content of the material surfaces has to be increased before heat treatment. The four major methods of case hardening are pack carburizing, gas carburizing, nitriding, and cyaniding. In pack carburizing the items to be carburized are loosely packed in a box in the presence of a carbonaceous material such as coal, charcoal, charred bones, bone meal, and hide scraps. The box is then heated to 1,700°F for a predetermined time. Barium, ammonium compounds, soda ash, and various salts act as energizers and hasten carbon diffusion into the steel. Gas carburizing is done with a gaseous atmosphere such as carbon monoxide or hydrocarbons—e.g., butane, ethane, methane, or propane—and provides better control than pack carburizing. Nitriding consists of heating steel in the presence of nitrogen (usually ammonia gas) for a predetermined time. Extremely hard surfaces can be produced by this process with little distortion and internal stress. Special nitriding steels have been developed that do not become too brittle after hardening. Cyaniding—in which steel is immersed in a molten salt bath containing a cyanide, usually sodium cyanide—is a combination of carburizing and nitriding. Quenching to impart hardness follows each of the processes.

Downloaded from http://www.everyspec.com

2.5.3.3 Tempering

The hardening process can leave a part brittle with a lot of internal stresses. Tempering is carried out to decrease brittleness, to relieve some of these stresses, and to add toughness to the part. Usually a slight loss of hardness results from the tempering process. Steel is tempered by reheating the part to the temperature required to provide the desired hardness, a temperature much below the hardening temperature; maintaining (soaking) it at that temperature for a predetermined time; and following with any desired rate of cooling. The color method, austempering, and martempering are the three major tempering processes. Selection of a particular method depends upon the composition and cross-sectional area of the part as well as on the desired hardness and degree of temper. Additional information about the interaction of these variables can be found in metallurgical texts or handbooks. In general, the color method, in which the temperature of the steel is estimated by its color, is not particularly reliable because color is affected by composition as well as by temperature. The austempering method, which changes austenite into banite—an intermediate structure between martensite and pearlite—involves an interrupted quenching process. This method is most suitable for case-hardened parts, parts with small cross-sectional areas (less than 1 in.^{2}), and high-carbon, low-alloy steels. The martempering process also involves interrupted quenching but results in the retention of the martensitic structure. This process is generally more suitable for high-alloy steels and parts with large cross-sectional areas.

2.5.3.4 Stabilization

Complete transformation to the martensite form is the objective of most hardening processes. Internal stresses created during the hardening process are partially relieved by tempering. The remaining austenite decomposes at normal temperature and results in a slightly enlarged product. The dimensional changes are very small (0.0001 to 0.0002 in./in.) and, therefore, affect only very high-precision gages. Transforming the remaining austenite to martensite through a process called subzero or cold treatment dimensionally stabilizes the gages. This treatment also increases the hardness and resistance to cracking during grinding. During the cold treatment process, the part is heated to its tempering temperature, cooled to ambient temperature, subsequently chilled to −120°F, and returned to the ambient temperature. This process may have to be repeated three to four times before grinding and lapping.

2.5.3.5 Alloying

Besides carbon, a number of materials can be added to steel in varying proportions to increase hardenability, toughness, ductility, machinability, and resistance to cracking, distortion, and wear. Table 2-3 shows the effect of each alloying element on steel.

2.5.4 TOLERANCES AND WEAR ALLOWANCES

The determination of a suitable part tolerance is governed primarily by the functional requirement of the dimension and secondarily by the cost of manufacture. Where standard fits are involved, such as with screw threads and antifriction-bearing mountings, the tolerances have been standardized and reference tables are available. In other cases manufacturing experience may be the best guide for establishing part tolerances.

Inspection equipment tolerances, wear allowances*, and wear limits** are always applied within the product limits—i.e., the extreme limits of the inspection device must in all cases fall within the acceptable product limits. The unilateral method of applying tolerances, in which the variation is permitted only in one direction from the specified dimension, is used for gaging dimensions that control extreme product limits. The bilateral system, in which the variation is permitted on both sides of the specified dimension, is preferred when tolerances are applied to gaging dimensions that are based on mean or intermediate product dimensions such as location of holes. Gage tolerances are usually a percentage of the product tolerance, but for many applications standard tables of gage tolerances have been developed.

*Wear allowance is the amount of material applied on fixed gage contact surfaces to provide a small amount of extra material for gage life.

**Wear limit is the point, i.e., dimension, of wear at which the gage must be removed from service.

Downloaded from http://www.everyspec.com

TABLE 2-3. EFFECTS OF ALLOYING ELEMENTS ON STEEL

Element	Content, %	Comments
Carbon (C)	≤ 0.90	Increases hardenability
	> 0.90	Improves wear resistance without appreciably increasing hardness; increases hardenability
Manganese (Mn)	≤ 0.5	Present in all steels and adds strength, toughness, and elasticity
	> 0.5	As an alloy, increases hardness penetration, allows rapid hardening, and improves dimensional stability; must be oil quenched
Silicon (Si)	0.10-0.30	Present in all tool steels
	0.50-2.0	As an alloy, used in conjunction with deep hardening elements such as manganese or chromium to add strength and toughness and to help increase hardness penetration
Phosphorus (P) and Sulphur (S)	≤ 0.03 combined	Generally considered to be impurities, but phosphorus increases machinability and resistance to atmospheric corrosion; sulphur improves machinability. Better quality tool steels have phosphorus and sulphur content below 0.015%
Chromium (Cr)	5.0-14.0	Increases hardness penetration and imparts great wear resistance; facilitates oil quenching; in combination with molybdenum, forms very deep hardening steel suitable for air quenching
Chromium (Cr)	11.0-14.0 Cr and 1.5-2.2C	Called "high-carbon, high-chromium steels"; imparts high wear resistance and high dimensional stability; can be oil or air quenched.
Nickel (Ni)	0.15-0.60	Adds toughness and greater tensile strength; makes suitable for oil quenching
Tungsten (W)	≤ 1.5	Increases wear resistance and imparts extreme hardenability in high-carbon steel
Vanadium (V)	≤ 0.15	Adds elasticity; if added to plain carbon steel, it increases toughness but does not affect hardness.
Molybdenum (Mo)	0.20-5.25	Makes suitable for oil or air quenching; minimizes enlargement of grain, resulting in more retained toughness; increases hardenability and wear resistance; also encourages decarburization during heat treatment.

The wear limit is the boundary of the wear allowance. It represents the point at which a gage must be withdrawn from service because all of the wear allowance has been expended. It is good practice to show the wear limit on the gage drawing and/or on the gage itself.

2.5.4.1 General Rules

In general, for fixed-limit-type gages, the gage tolerance should not exceed 10% of the product tolerance. For very large or complex parts, for which the tolerance computed by the 10% rule or from a reference table becomes impractical, the product designer may allow additional tolerance. Master check gages, used for checking other gages, should have a tolerance of 5% of the product tolerance. Due to economical considerations, the tolerances assigned are seldom less than 0.0001 in. and are very rarely less than 0.00005 in.

When product dimensions are prescribed as maximum or minimum values without a given tolerance and no other guidance is available, the inspection equipment tolerance shall be based either on a product tolerance obtained from the product designer or on the sum of the tolerances on the overall dimension to be gaged,

Downloaded from http://www.everyspec.com

whichever is less. When the tolerance cannot be determined by either of these methods, the following rules may be applied:

1. For all dimensions up to 15.0 in., use a gage tolerance of 0.001 in.
2. For dimensions greater than 15.0 in., use a gage tolerance of 0.0002 in./in. of product dimension.

For limit-type inspections, usually two gages are used to verify that a part feature falls within the limits of acceptability. The "Go" gage represents the MMC of the product, i.e., maximum shaft size or minimum hole size, and controls the minimum clearance between mating parts. A "Not Go" gage represents the minimum metal limit, i.e., minimum shaft size and maximum hole size, and controls the maximum clearance between mating parts.

Another rule applicable to functional gage designs is commonly known as the 40% rule. The rule is actually a gage design procedure whose name is derived from the fact that the basic size of the gage is related to 40% of a known parameter. This rule is specially applicable where geometric considerations such as concentricity and alignment are not specified on the part drawing, but the implied requirement is that the parts must assemble. The first step in the application of the 40% rule is to determine the minimum clearance between each of the mating parts. The assembly operating conditions should be thoroughly analyzed because the minimum clearance does not necessarily occur when a mechanism is in a rest position.

To establish the basic size of the functional gage, add 40% of the minimum clearance to the male part size. Similarly, subtract 40% of the minimum clearance from the female part size to establish the basic size of the functional gage. The resultant neutral zone of 20% of minimum clearance is essential for interchangeability. Use 10% of the minimum clearance as the tolerance for the gage. This amount should not be less than 0.0001 in. nor greater than 0.001 in.

Wear allowance is provided on many fixed-gage contact surfaces to provide a small amount of extra metal to lengthen the useful life of the inspection device. The following gages do not require wear allowances: "Not Go" gages; adjustable gages, which can be reset; height, depth or flush pin gages, on which wear occurs on both surfaces in the same direction; certain classes of thread gages; taper gages with an included angle greater than 15 deg; "after painting" gages; and inspection devices with extremely wear-resistant material such as tungsten carbide or chromium-plated steel.

2.5.4.2 Tolerance Tables

As noted, the tolerance to be provided on a gage depends primarily on the tolerance on the part dimension to be checked and secondarily on the part dimension itself. The gage tolerance should be practical from a functional and economical standpoint and should deprive the part of the least amount of part tolerance.

The wear allowance to be provided on a gage depends largely on the material used for the wearing surface of the gage and the part tolerance. The wear allowance should not be excessive because it reduces the range of part sizes that will be accepted by the gage. For many applications standard tables of gage tolerances have been developed that incorporate the previously mentioned rules, and these tables are included in the gage design chapters of this handbook. As an example, Table 2-4 shows a tolerance table for taper plug and ring; flat plug; fixed snap gages; and depth, length, and flush pin types.

2.5.5 SPECIFICATION OF INSPECTION EQUIPMENT

The selected inspection equipment can fall into the following three categories:

1. Existing Government designs
2. Standard or commercially available equipment
3. Specially designed equipment.

When Government designs are specified, only the stock number or drawing number is required. For standard or commercially available equipment, the type of equipment, the required measuring capacity, and other features essential for performance should be specified. Complete manufacturing drawings should be prepared for specially designed inspection requirements.

Downloaded from http://www.everyspec.com

TABLE 2-4. SAMPLE GAGE TOLERANCE TABLE

This table applies to

1. Taper plug and ring gages (included angle up to and including 15 deg). Fixed snap gages and flat plug gages (excluding flat cyindrical type). Wear allowances are required.
2. Taper plug and ring gages (included angle greater than 15 deg). Wear allowances are not required.
3. Maximum and minimum gages—e.g., depth, length, and flush pin types. Wear allowance not required. "Go" tolerance should be used for both maximum and minimum gages.

Size Range (in.)		Component Tolerance	Wear Allowance	Tolerance	
Above	To and Including			"Go"	"Not Go"
.0	.825	.0005		.00004	.00004
.825	1.510			.00006	No "Not Go" Gage Used
1.510	2.510			.00008	
2.510	4.510			.00010	
4.510	6.510			.00013	
6.510	8.510			.00015	
8.510	10.510			.00017	
10.510	UP			.00020	
.0	.825	.001	.00010	.00005	.00005
.825	1.510		.00010	.00006	.00006
1.510	2.510			.00008	.00008
2.510	4.510			.00010	.00010
4.510	6.510			.00013	No "Not Go" Gage Used
6.510	8.510			.00015	
8.510	10.510			.00017	
10.510	UP			.00020	
.0	4.510	.002	.00010	.00010	.00010
4.510	6.510			.00020	.00013
6.510	8.510			.00020	.00016
8.510	UP			.00020	.00020
.0	.825	.003	.00010	.00010	.00010
.825	4.510		.00010	.00020	.00010
4.510	8.510		.00010	.00020	.00020
8.510	10.510			.00030	.00020
10.510	UP			.00030	.00030
.0	2.510	.004	.00020	.00020	.00010
2.510	4.510		.00020	.00020	.00020
4.510	8.510		.00020	.00030	.00020
8.510	12.510		.00010	.00040	.00020
12.510	UP		.00010	.00050	.00020
.0	2.510	.005	.00030	.00020	.00010
2.510	4.510		.00020	.00020	.00020
4.510	8.510		.00020	.00030	.00020
8.510	10.510		.00020	.00040	.00020
10.510	UP		.00010	.00050	.00030
.0	2.510	.006	.00030	.00020	.00010
2.510	4.510		.00030	.00020	.00020
4.510	6.510		.00020	.00030	.00020
6.510	8.510		.00020	.00030	.00030
8.510	10.510		.00020	.00040	.00030
10.510	12.510		.00020	.00050	.00040
12.510	UP		.00010	.00060	.00040
.0	1.510	.007	.00040	.00020	.00010
1.510	2.510		.00030	.00020	.00020
2.510	4.510		.00030	.00030	.00020
4.510	6.510		.00030	.00030	.00030
6.510	8.510		.00030	.00040	.00030
8.510	10.510		.00020	.00050	.00030
10.510	12.510		.00020	.00060	.00040
12.510	14.510		.00020	.00070	.00040
14.510	UP		.00010	.00080	.00050
.0	1.510	.008	.00040	.00020	.00010
1.510	2.510		.00040	.00020	.00020
2.510	4.510		.00030	.00030	.00030
4.510	6.510		.00030	.00040	.00030
6.510	8.510		.00030	.00040	.00040
8.510	10.510		.00030	.00050	.00040
10.510	12.510		.00020	.00060	.00050
12.510	14.510		.00020	.00070	.00050
14.510	UP		.00020	.00080	.00060
.0	.825	.009	.00040	.00020	.00010
.825	1.510		.00040	.00030	.00010
1.510	2.510		.00040	.00030	.00020
2.510	6.510		.00040	.00040	.00030
6.510	8.510		.00040	.00050	.00040
8.510	10.510		.00030	.00060	.00040
10.510	12.510		.00030	.00070	.00050
12.510	14.510		.00030	.00080	.00050
14.510	UP		.00030	.00090	.00060
.0	.825	.010	.00040	.00030	.00010
.825	1.510		.00040	.00030	.00020
1.510	4.510		.00040	.00040	.00030
4.510	6.510		.00040	.00050	.00040
6.510	8.510		.00040	.00060	.00040
8.510	10.510		.00040	.00070	.00050
10.510	12.510		.00040	.00080	.00050
12.510	14.510		.00030	.00090	.00060
14.510	UP		.00030	.00100	.00060
.0	1.510	.012	.00040	.00060	.00020
1.510	4.510		.00040	.00070	.00030
4.510	8.510		.00040	.00080	.00040
8.510	12.510		.00040	.00090	.00050
12.510	UP		.00030	.00100	.00060
.0	1.510	.014	.00040	.00060	.00020
1.510	4.510		.00040	.00080	.00030
4.510	8.510		.00040	.00100	.00040
8.510	12.510		.00040	.00120	.00050
12.510	UP		.00040	.00140	.00060
.0	2.510	.016	.00040	.00080	.00020
2.510	6.510		.00040	.00100	.00040
6.510	12.510		.00040	.00120	.00060
12.510	UP		.00040	.00140	.00080
.0	4.510	.020	.00040	.00100	.00040
4.510	6.510		.00040	.00100	.00060
6.510	12.510		.00040	.00150	.00080
12.510	UP		.00040	.00200	.00100
.0	4.510	.025 Up	.00040	.00100	.00080
4.510	6.510		.00040	.00100	.00100
6.510	12.510		.00040	.00150	.00150
12.510	UP		.00040	.00200	.00100

For component tolerance and/or size range not shown, use next smaller component tolerance.

Downloaded from http://www.everyspec.com

2.5.6 CALIBRATION CONSIDERATIONS

An established accuracy is a fundamental requirement for all inspection equipment. Therefore, inspection equipment designs must provide for the establishment and verification of the accuracy necessary to accomplish the intended purpose. Calibration of standards and inspection equipment shall be conducted in accordance with the procedures in MIL-STD-45662 (Ref. 2). This standard

1. Provides for the establishment and maintenance of a calibration system to control the accuracy of the inspection equipment
2. Applies to all contracts involving the use of inspection equipment
3. Discusses calibration requirements, the need for a written system description, adequate accuracy of measuring equipment, environmental controls, calibration intervals and procedures, and traceability to the National Institute of Standards and Technology. Also included in the standard are discussions of adherence to national standards, recordkeeping, inspection equipment labeling, and storage and handling. Calibration of automatic inspection equipment requires special consideration and procedures, and these are discussed in detail in Chapter 10.

MIL-STD-45662 (Ref. 2) also stipulates that calibration should be conducted in an environment controlled to the extent necessary to assure measurements of the required accuracy. This general guidance may be amplified as in MIL-A-002550 (Ref. 6), which delineates specific temperature, humidity, vibration, and other requirements. Records that demonstrate adherence to the specific conditions must be maintained and be available for review by the Government.

Several specialized types of gages are used to insure accuracy. A *master gage* is used as a referee gage to accept or reject products that were initially rejected by acceptance gages. A master gage is made to one of the specified (maximum or minimum) product limits to a high degree of accuracy relative to the product tolerance. For noninterference-type mating parts, master gages simulate the minimum size of the female part and maximum size of the male part; this simulation permits inspection at a point at which interference should begin.

A *master check gage* or *set master gage* simulates the product dimensions to be gaged and usually is made either to a maximum or minimum condition. These gages are used for setting and monitoring other inspection equipment to include gages and master gages. The master check gage is a very accurate gage made to within 5% of the product tolerance.

Thread-setting gages are used for setting adjustable thread ring gages, thread snap gages, and thread comparators. These gages are made to tolerances contained in FED-STD-H28/6, *Screw Thread Standards for Federal Services* (Ref. 8). Detailed information about these gages is provided in Chapter 8.

The following guidance applies to inspection equipment calibration:

1. Master equipment used for checking inspection equipment should not be used for any other purpose. Other uses could affect accuracy through accumulated dirt, rust, scratches, nicks and dents, etc.
2. All features and surfaces used as references during calibration should be true to geometric form. The geometric requirements for gaging and precision functional surfaces should be in accordance with par. 3.2.2, MIL-G-10944 (Ref. 7).
3. Surface finish and hardness of masters should be adequate to meet the inspection requirements. Surface roughness can affect the accuracy. If the surfaces being used are not hard enough, they will be nicked and dented within a short period of use and rendered inaccurate.
4. Handling should be minimized while gages are being checked because heat transfer and sweat from hands can adversely affect readings. The use of gloves, tongs, etc., is advised whenever gages must be handled during checking.
5. A definite order of events or procedures is essential to insure repetitiveness of test conditions and to eliminate the possibility of error caused by step omissions.
6. Calibration should be accomplished in the following sequence:
   a. Isolate the values of all specified acceptance limits to be tested or inspected.
   b. Isolate all variables inherent in the inspection equipment design that can affect the accuracy of the results.

Downloaded from http://www.everyspec.com

c. Analyze each variable relative to its effect on the final test results, and establish an acceptable tolerance range for each.

d. Ascertain that the design permits achievement and verification of each tolerance limit established during initial construction of a gage.

e. Based on consideration of wear, fatigue, abuse, and/or unauthorized adjustment, isolate all points that require periodic recalibration during the life of the equipment.

f. Provide notes as necessary to explain adequately unusual or complex calibration procedures.

g. Note on the design whether the design is known to possess an inherent instability that may require unusually frequent recalibration.

2.5.7 SAFETY CONSIDERATIONS

The safety of inspection personnel must be a major consideration in the design or selection of inspection equipment. In addition, for economic reasons the protection of the product should also be given adequate consideration, i.e., products that are damaged or destroyed during inspection can significantly increase manufacturing costs. The subparagraphs that follow describe techniques helpful in achieving human and product safety.

2.5.7.1 Explosion-Proof Designs

If products are flammable or explosive, inspection equipment must be designed to minimize the chances of such occurrences. This protection is accomplished by using explosion-proof electrical designs and by making maximum use of nonsparking materials.

2.5.7.2 Remote Monitoring Facility

Where handling of the product or proximity to the product could be hazardous to humans, inspection controlled from a remote facility should be specified.

2.5.7.3 Static Electricity-Free Designs

Accumulation of static electrical charges that can cause injury should be prevented. This prevention may be achieved by keeping equipment and personnel at the same electrical potential, usually ground.

2.5.7.4 Adequate Grounding

Whenever a current-carrying conductor makes contact with the conductor enclosure—raceways, cabinets, exposed metal parts of tools, etc.—the enclosure assumes the same voltage as the current-carrying conductor and causes a flow of current through the path of least resistance from the energized conductor to ground. A person who touches such an exposed metal surface may provide a path through his body back to ground and receive a painful or even lethal shock. Sparking or heat could also damage the product or other equipment. These problems can be avoided by (1) interconnecting and independently grounding all metal parts to the *same* ground or (2) installing a ground fault interrupter in the main power circuit. The ground fault interrupter senses any leakage of current to ground and instantaneously disconnects the power source.

2.5.7.5 Sharp Edges and Pinch Points

An edge is called a sharp edge if the radius at the edge is less than 0.005 in. If left exposed, sharp edges can be hazardous; therefore, rounding or chamfering should be specified to eliminate nonfunctional sharp edges.

Pinch points on inspection equipment should, if possible, be eliminated or covered to avoid injury. If pinch points are left exposed, the use of personal safety equipment should be strongly encouraged.

2.5.7.6 Inspection Equipment Weight Considerations

Lifting of heavy inspection equipment can result in back or muscle injuries and should be avoided if possible. Common sense and recurring instruction in proper lifting techniques are the best means of preventing such injuries. MIL-STD-1472, *Human Engineering Design Criteria for Military Systems, Equipment, and Facilities*, (Ref. 9) contains additional information relative to lifting capabilities and limitations.

Downloaded from http://www.everyspec.com

REFERENCES

1. DARCOM-R 702-2, *Inspection Equipment Design, Supply, and Maintenance*, 27 May 1966.
2. MIL-STD-45662, *Calibration System Requirements*, 9 February 1980.
3. ANSI Y14.5M-1982, *Dimensioning and Tolerancing*, American Society of Manufacturing Engineers, New York, NY, 1982.
4. MIL-STD-105D, *Sampling Procedures and Tables for Inspection by Attributes*, 29 April 1983.
5. MIL-STD-1235A, *Single and Multilevel Continuous Sampling Procedures and Tables for Inspection by Attributes—Functional Curves of the Continuous Sampling Plans*, 28 June 1974.
6. MIL-A-002550C, *Ammunition, General Specification for*, 17 November 1977.
7. MIL-G-10944B, *Gages, Dimensional Control*, 12 October 1965.
8. FED-STD-H28, *Screw Thread Standards for Federal Services*, 31 March 1978.
9. MIL-STD-1472C, *Human Engineering Design Criteria for Military Systems, Equipment, and Facilities*, 2 May 1981.

BIBLIOGRAPHY

Clifford W. Kennedy and Donald E. Andrews, *Inspection and Gaging*, Fifth Edition, Industrial Press, Inc., New York, NY, 1977.

Leno C. Michelon, *Industrial Inspection Methods*, Revised Edition, Harper and Brothers Publishers, New York, NY, 1950.

Edward S. Roth, Ed., *Gaging: Practical Design and Application*, Society of Manufacturing Engineers, Dearborn, MI, 1981.

Edward S. Roth, *Functional Gaging*, Second Edition (Revised), Society of Manufacturing Engineers, Dearborn, MI, 1970.

Downloaded from http://www.everyspec.com

CHAPTER 3
STANDARD MEASURING EQUIPMENT (SME)

This chapter describes measuring instruments, transferring devices, surface plates, surface plate accessories, and coordinate measuring machines. Considerations involved in selecting the right kind of instrument, device, or surface plate accessory for any application are discussed. The major performance characteristics of standard measuring equipment (SME)—accuracy and inspection speed—also are discussed.

3.1 INTRODUCTION

Depending primarily upon the speed and frequency with which an inspection must be made, an inspection requirement can be verified either by measurement or by gaging. The distinction between the two methods is that the inspector must compare a measurement with the toleranced dimension specified, whereas a gage allows the inspector to render a pass or fail determination without knowledge of the exact dimension. Gaging is faster and less prone to operator error, but the gages have very limited applicability, i.e., the use of any particular gage is restricted to a small range of dimensions. In some cases gages are unique to one part feature. Measuring equipment, on the other hand, is more generally applicable and, therefore, less costly when a small quantity of parts is to be inspected.

Various types of measuring equipment and some special measuring applications are discussed in this chapter and the following two chapters. This chapter also deals with measuring equipment typically available from commercial sources and commonly known as standard measuring equipment, or SME. Because there is no universally accepted definition of SME, for the purposes of this handbook, SME includes various measuring instruments, devices for transferring dimensions, surface plates and accessories, and coordinate measuring machines. Each of these categories is covered in the paragraphs that follow. The material in this chapter is, by necessity, mostly introductory in nature. Additional information may be found in any metrology textbook; a partial list of these textbooks is provided in the bibliography.

3.2 MEASURING INSTRUMENTS

3.2.1 STEEL RULES

The steel rule shown in Fig. 3-1 is a basic measuring instrument used for making linear measurements. Use of the steel rule involves making a visual comparison of the dimension and the scale. For this reason, the rule is only accurate within 0.01 in. and, therefore, is considered a nonprecision instrument.

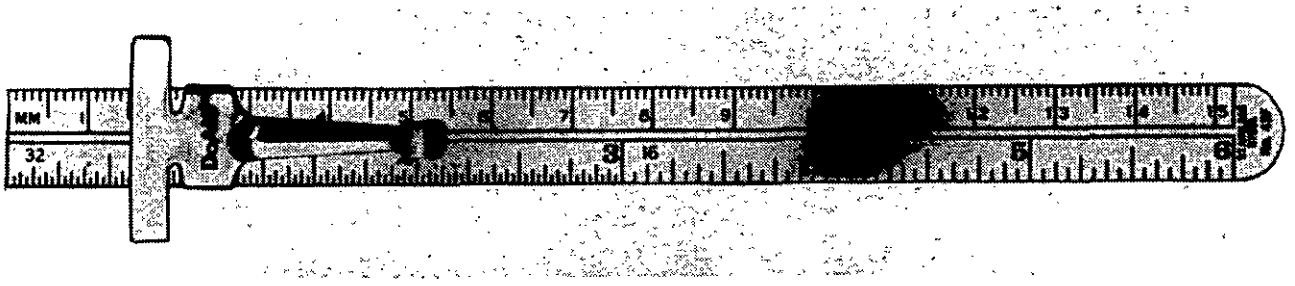

Courtesy of DoALL Company.

Figure 3-1. Steel Rule

Height and depth gages have an arm that slides upon the rule, contacts one end of the dimension, and simultaneously points to the appropriate division on the scale. This design is a variation of the steel rule, and both of these gages are sometimes equipped with vernier scales. A vernier depth gage is shown in Fig. 3-2. Height gages are commonly considered surface plate accessories and are discussed in par. 3.4.3.

Downloaded from http://www.everyspec.com

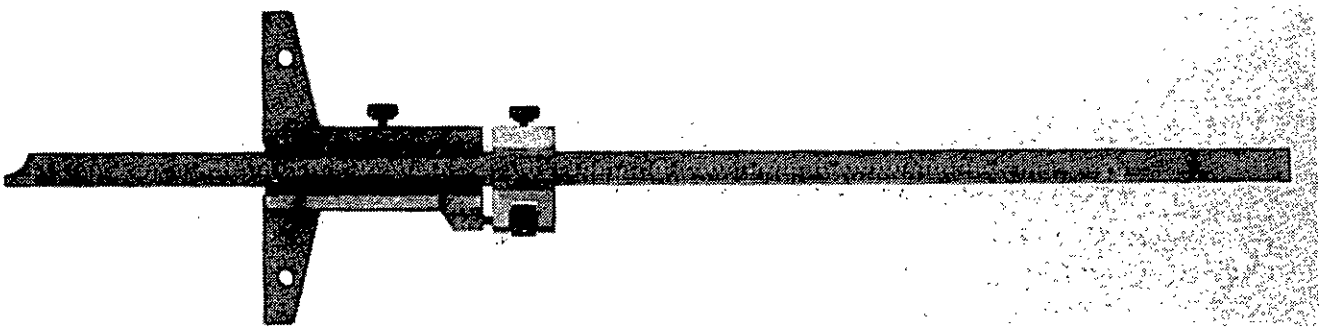

Compliments of MITUTOYO/MTI Corporation.

Figure 3-2. Vernier Depth Gage

Basic rules are classified according to either the system of graduation of the scale or the type of construction. Steel rules are available in lengths ranging from a fraction of an inch to 4 ft or more. No established selection criteria exist for steel rules other than to select a rule of appropriate accuracy and of the type of construction most appropriate to the inspection requirement.

Three major types of errors are associated with the use of steel rules. The first is inaccurate alignment of the scale and the product feature to be measured. The second occurs when the direction of observation is not normal to the line being measured, which distorts the view of the scale and point to be aligned. The error thus introduced is known as a parallax error. The third type of error is introduced into the measurement by wear on the ends of the rule.

The major advantages of steel rules are their simplicity and the speed with which they can be used. The primary disadvantages are lack of sensitivity and accuracy.

3.2.2 PROTRACTORS

The protractor is a basic instrument for measuring angles and is also used to transfer angles. The principles of use for protractors are similar to those for making direct linear measurements, but the referencing technique is different. A linear distance is defined by two points, but two straight lines are needed to form an angle. Therefore, the aligning members of angle-measuring instruments are provided with functional elements that represent straight lines. The measurements are made either by encompassing the two bounding elements of the angle or by using a common reference plane, such as resting the product and the protractor on a surface plate.

The two major types of protractors are plain and universal bevel protractors. The plain protractor is shown in Fig. 3-3, and the universal bevel protractor in Fig. 3-4. Although one type of protractor may be easier to use in a particular situation, the instruments are interchangeable; this versatility leaves accuracy as the only selection criterion. Protractors without verniers are typically accurate within 30 min of a degree, and those with verniers are accurate within 5 min of a degree.

3.2.3 COMBINATION SQUARES

A combination square is basically a 12-in. steel rule equipped with several attachments to enhance its versatility. The attachments, which slide in a groove in the rule and can be locked in place by a thumb nut, allow the instrument to be used as a protractor and as a height or depth gage. A combination square set is shown in Fig. 3-5. The centering head and the fixed 45-deg and 90-deg references on the sliding head also make the combination square extremely useful in layout work. A spirit level provided on the sliding head facilitates the measuring of angles in relation to the horizontal or vertical plane. When detached from the rule, the sliding head can be used as an ordinary level.

Several applications of the combination square as a measuring instrument are illustrated in Fig. 3-6. The accuracy and sources of error associated with combination squares are the same as those previously discussed for steel rules and protractors. Because the sliding head makes positive contact with one end of the object being measured, however, the extent of alignment errors is reduced.

Downloaded from http://www.everyspec.com

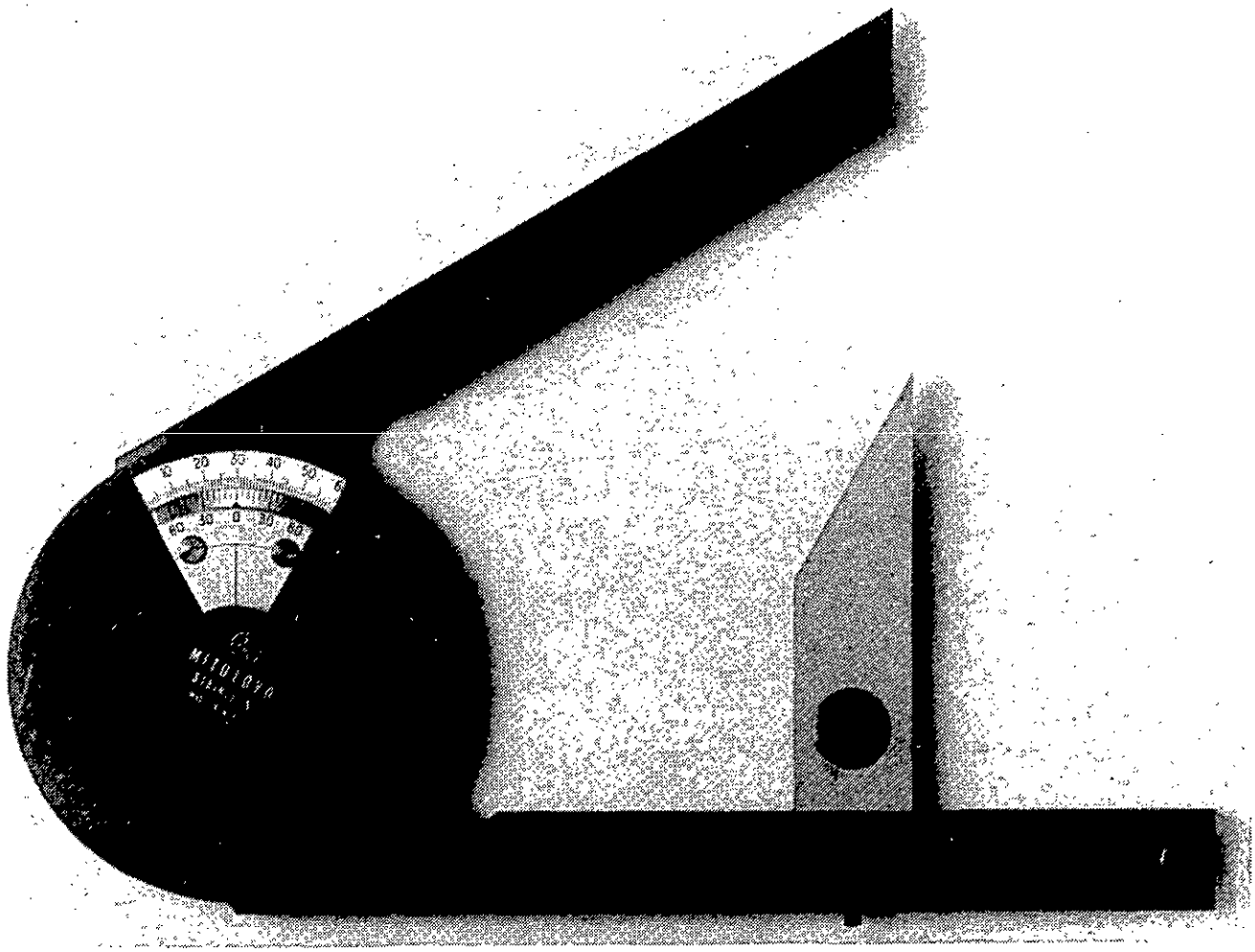

Compliments of MITUTOYO/MTI Corporation.

Figure 3-3. Plain Protractor

Downloaded from http://www.everyspec.com

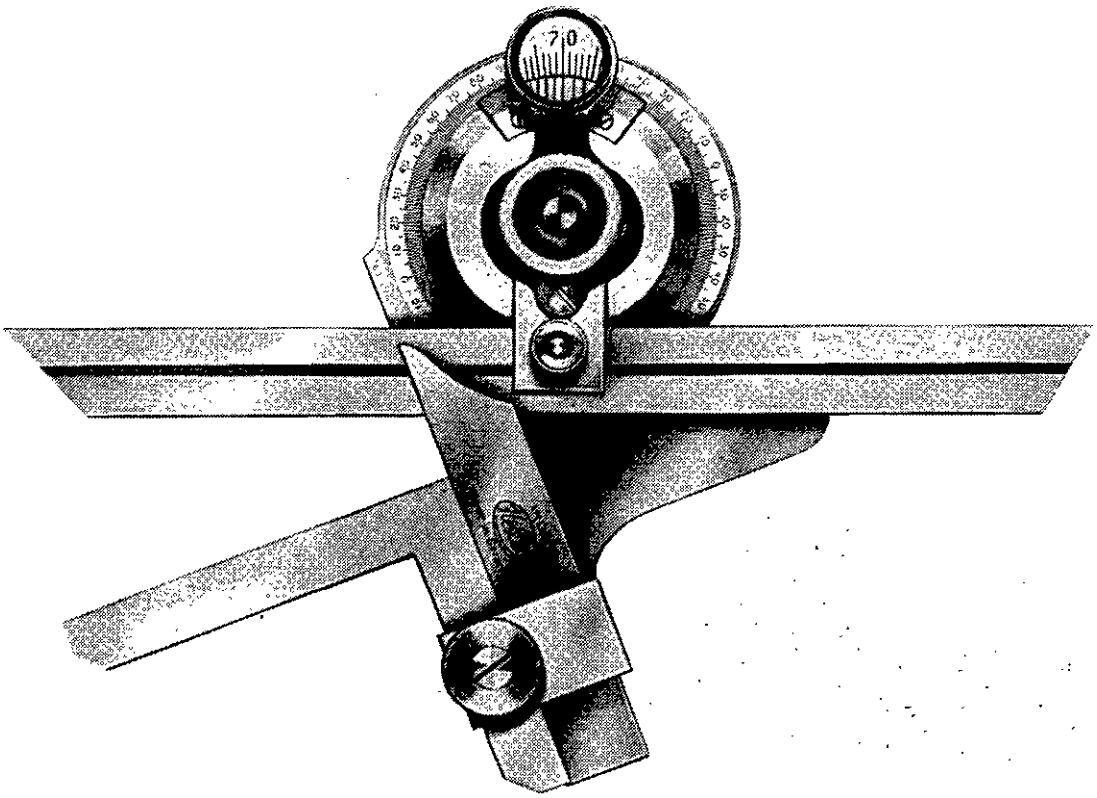

Provided by the Fred V. Fowler Co., Inc., Newton, MA.

Figure 3-4. Universal Bevel Protractor

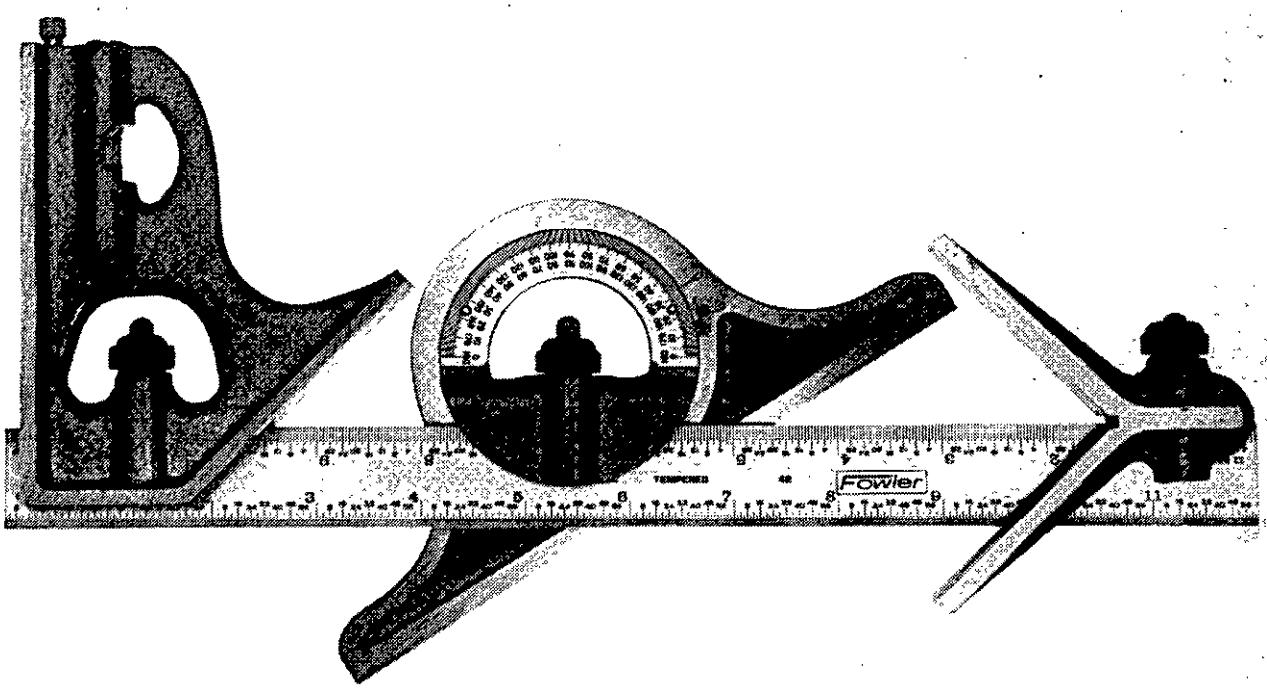

Provided by the Fred V. Fowler Co., Inc., Newton, MA.

Figure 3-5. Combination Square Set

Downloaded from http://www.everyspec.com

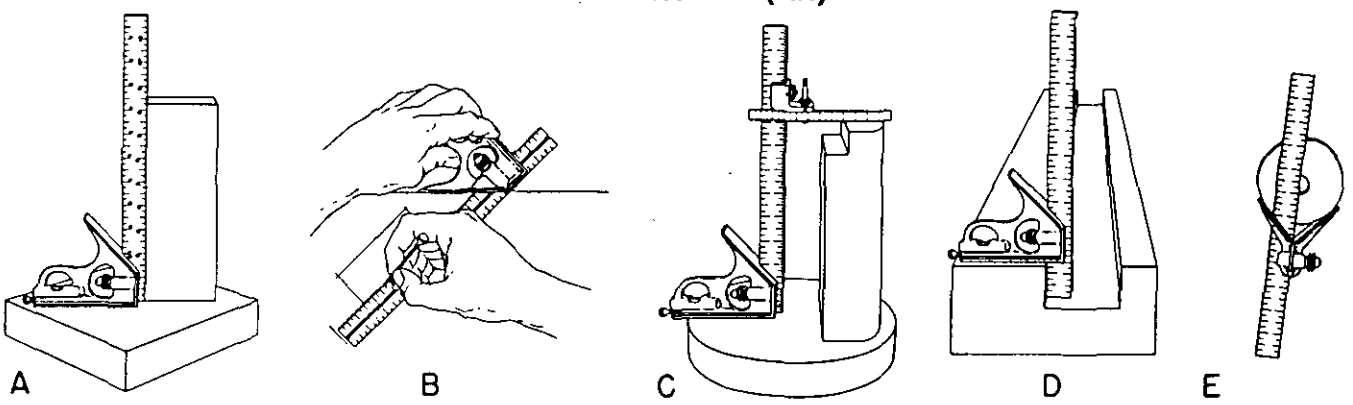

From *Inspection and Gaging* by C. W. Kennedy and D. E. Andrews. © copyright 1977 by Industrial Press, Inc., New York, NY.

Figure 3-6. Applications of Combination Square

3.2.4 MICROMETERS

Micrometers are precision measuring instruments, accurate within 0.0001 in., used for measuring internal and external dimensions. Micrometers have a fixed measuring surface known as the anvil and a movable measuring surface called the spindle, which is operated by the thimble. The thimble is turned until both the spindle and anvil are in contact with the workpiece. The measurement is displayed on two scales—a linear scale that registers direct axial advance and a circumferential scale that indicates partial rotation of the thimble. Finer measurements can be achieved by incorporating a vernier with the circumferential scale.

Micrometers are categorized according to the type of measurement they make. For example, Fig. 3-7 shows an outside micrometer with the typical "U"-shaped frame. The inside micrometer, shown in Fig. 3-8, differs only in the shape of the frame. Both the outside and inside micrometers can be adapted for special applications with different frames, anvils, or spindles. Several other less common micrometers used for special applications include the supermicrometer, the indicating micrometer,and the inside micrometer calipers. Sources of error associated with the use of the micrometers are parallax and measuring pressure.

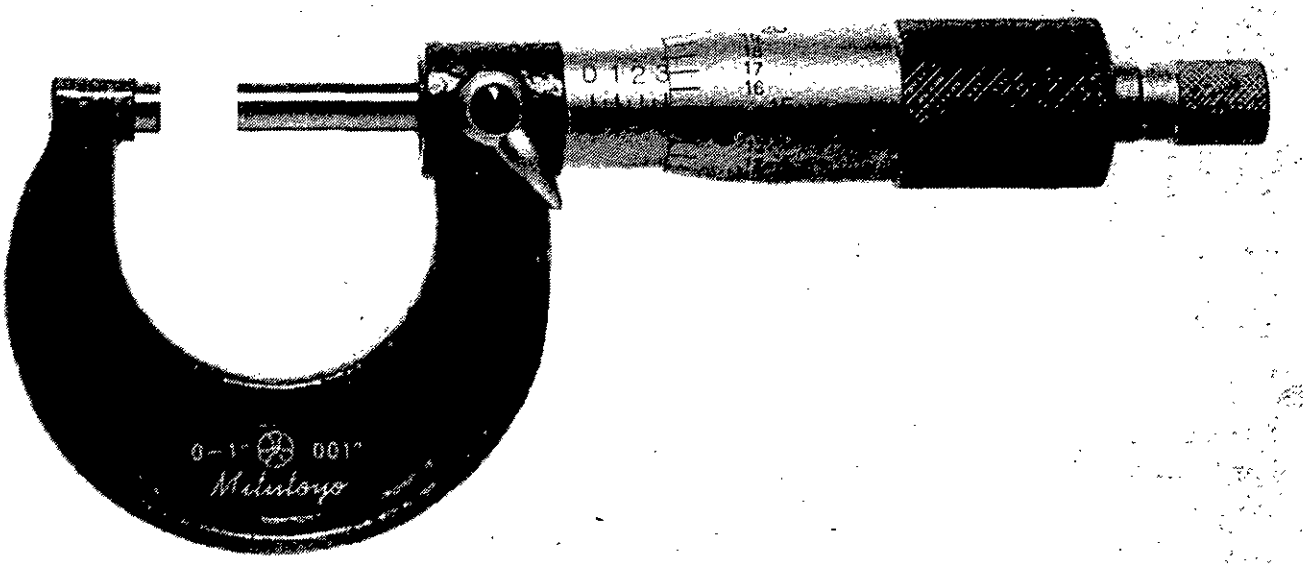

Compliments of MITUTOYO/MTI Corporation.

Figure 3-7. Outside Micrometer

Downloaded from http://www.everyspec.com

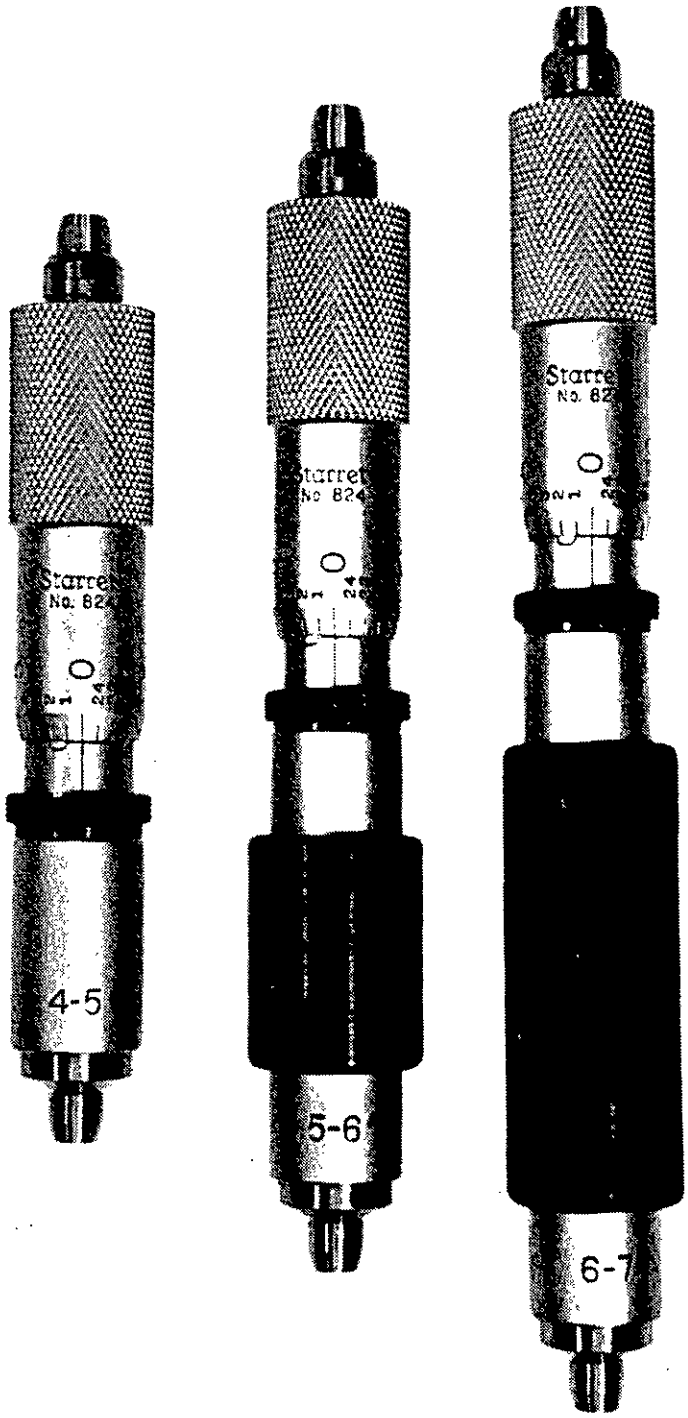

Courtesy of The L. S. Starrett Company, Athol, MA.

Figure 3-8. Inside Micrometers

Downloaded from http://www.everyspec.com

3.2.5 VERNIER CALIPERS

The basic vernier caliper consists of a graduated rule known as the beam, a fixed jaw (called the base or cross beam), and a sliding jaw. The useful measuring range of vernier calipers varies from a few inches to several feet. Like the micrometer, verniers are available for inside or outside measurements, depending upon the construction of the jaws. Many vernier calipers, like the one shown in Fig. 3-9, are equipped with jaws that permit both types of measurements. Generally, vernier calipers are accurate to within 0.001 in.

Some vernier calipers also have a depth gage tongue that projects beyond the end of the body. Although this feature is useful for making quick measurements, the precision of these depth measurements is not considered equivalent to measurements between the jaws of the same instrument.

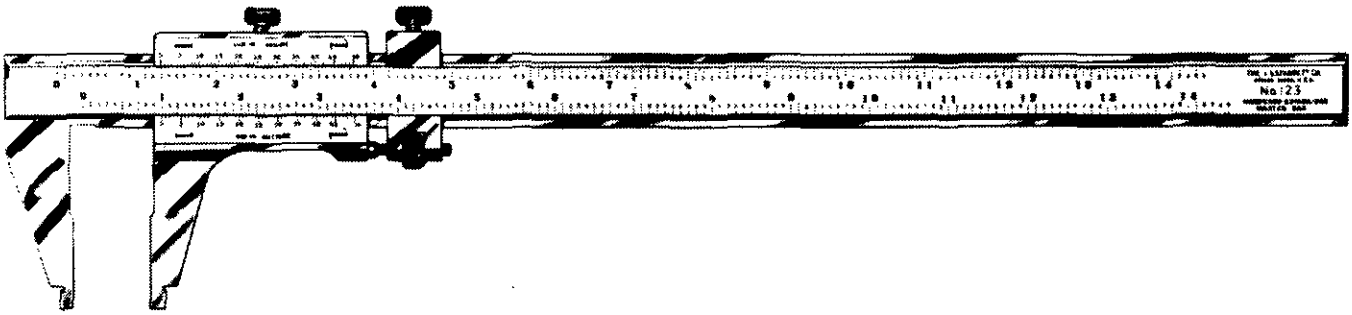

Courtesy of The L. S. Starrett Company, Athol, MA.

Figure 3-9. Vernier Caliper

3.2.6 FEELER GAGES

Feeler gages, also known as thickness gages, are commercially available sets of metal leaves of known thickness used for measuring the widths of narrow gaps, slots, recesses, or clearances. Because a measurement—rather than a simple pass or fail determination—is made, these "gages" are, in actuality, measuring instruments. They are known as feeler gages because the operator must rely on his sense of feel to determine when both sides of the gage are in contact with the product. Consequently, considerable experience is required to make consistently accurate measurements.

As Fig. 3-10 shows, a set of feeler gages may consist of 25 or more leaves or blades mounted on a common spindle. The leaves are hardened and tempered steel and can be detached from the set if necessary. The leaves made to dimensions in English units usually increase in steps of from 0.0005 to 0.002 in., and the thickness is marked on each blade. When a measurement lies between available leaf thicknesses, leaves can be combined to construct the desired dimension.

Feeler gages frequently are used as "Not Go" instruments. For example, when a gap between two assembled parts is specified as ".010 in. max", a .010-in. feeler would be specified as a "Not Go" gage. Because the leaves of feeler gages are quite delicate, they are easily bent, burred, or worn. Therefore, when the gages are in constant use, they should be checked regularly and the worn or damaged leaves replaced.

3.3 TRANSFERRING DEVICES

Where accessibility is limited, direct measurement of a dimension is not always possible. Several devices that temporarily record the dimensions for subsequent transfer to a measuring instrument are available for use in such instances. Similarly, a dimension may be transferred from a measuring instrument to the workpiece or between workpieces. Some of the more common transferring devices are discussed in the paragraphs that follow.

Downloaded from http://www.everyspec.com

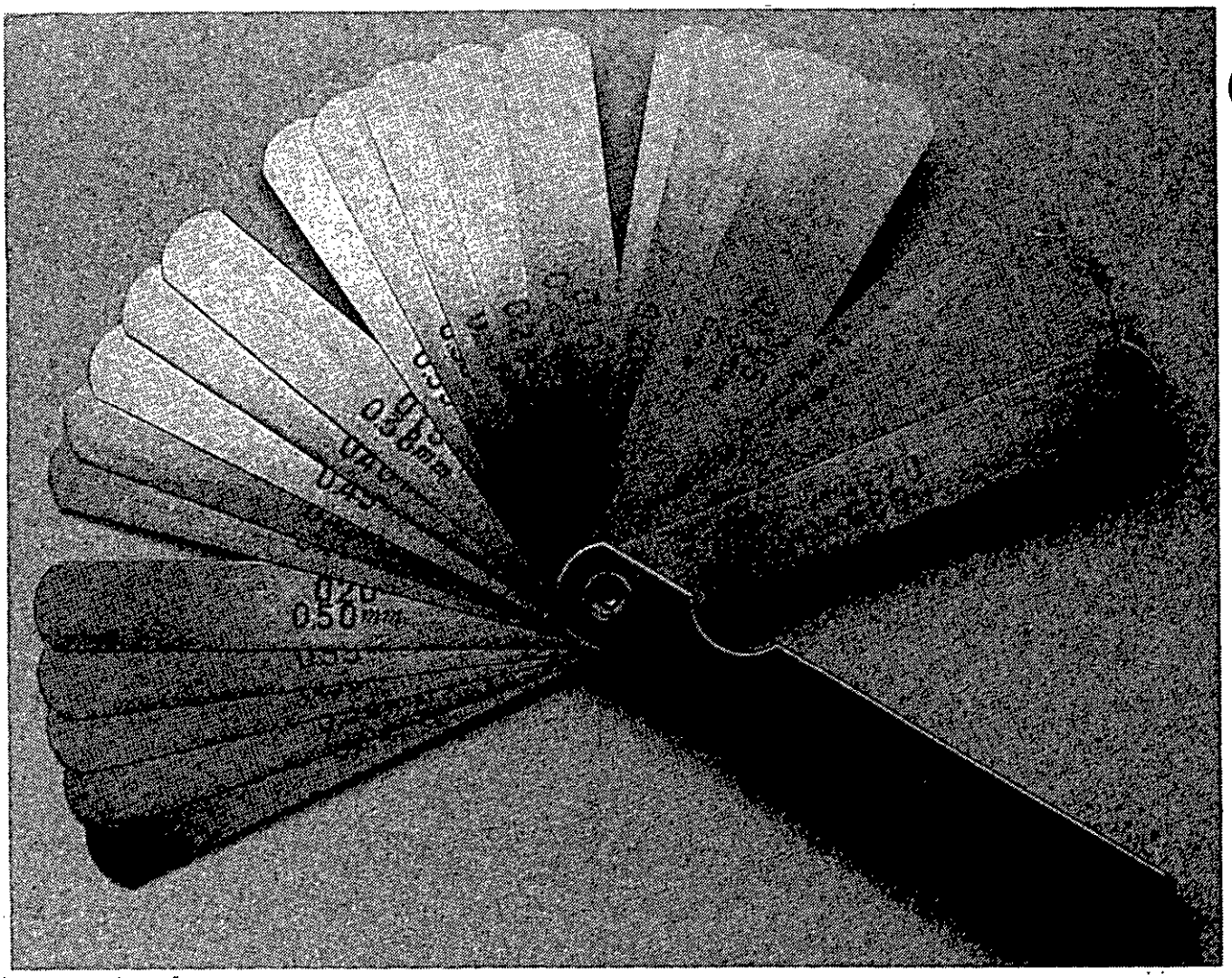

Figure 3-10. Feeler Gages

3.3.1 CALIPERS

Calipers are transferring devices that consist of two adjustable legs joined at the apex. They differ from the dividers discussed in par. 3.3.2 in that the contact points are rounded rather than pointed, and the ends of the legs are bent to contact the product feature positively. Rounded contacts provide greater rigidity than sharply pointed contacts do and still allow a point contact that is particularly advantageous for working with inside diameters. Inside and outside calipers, the two basic types, are shown in Fig. 3-11. As the names imply, these devices are used for transferring inside and outside dimensions, respectively. Other classifications exist within each category according to the method used to secure the legs. For example, several types of inside calipers are available—i.e., the spring caliper; screw-adjusting, firm joint caliper; and firm joint caliper. The gear tooth vernier caliper is a specialized device discussed in par. 6.2.5.1.

Toolmaker's spring calipers are available for size ranges of 2 to 8 in. Spring calipers are more accurate than other types are because the hoop spring tension holds the legs firmly against the adjusting nut. This feature enables the operator to develop a sense of touch for the instrument. Firm joint calipers, for which friction in the joint holds the legs in position, are available for larger dimensions (3 to 36 in.), and these calipers sometimes are equipped with an adjusting screw to facilitate fine adjustment in setting the legs.

Downloaded from http://www.everyspec.com

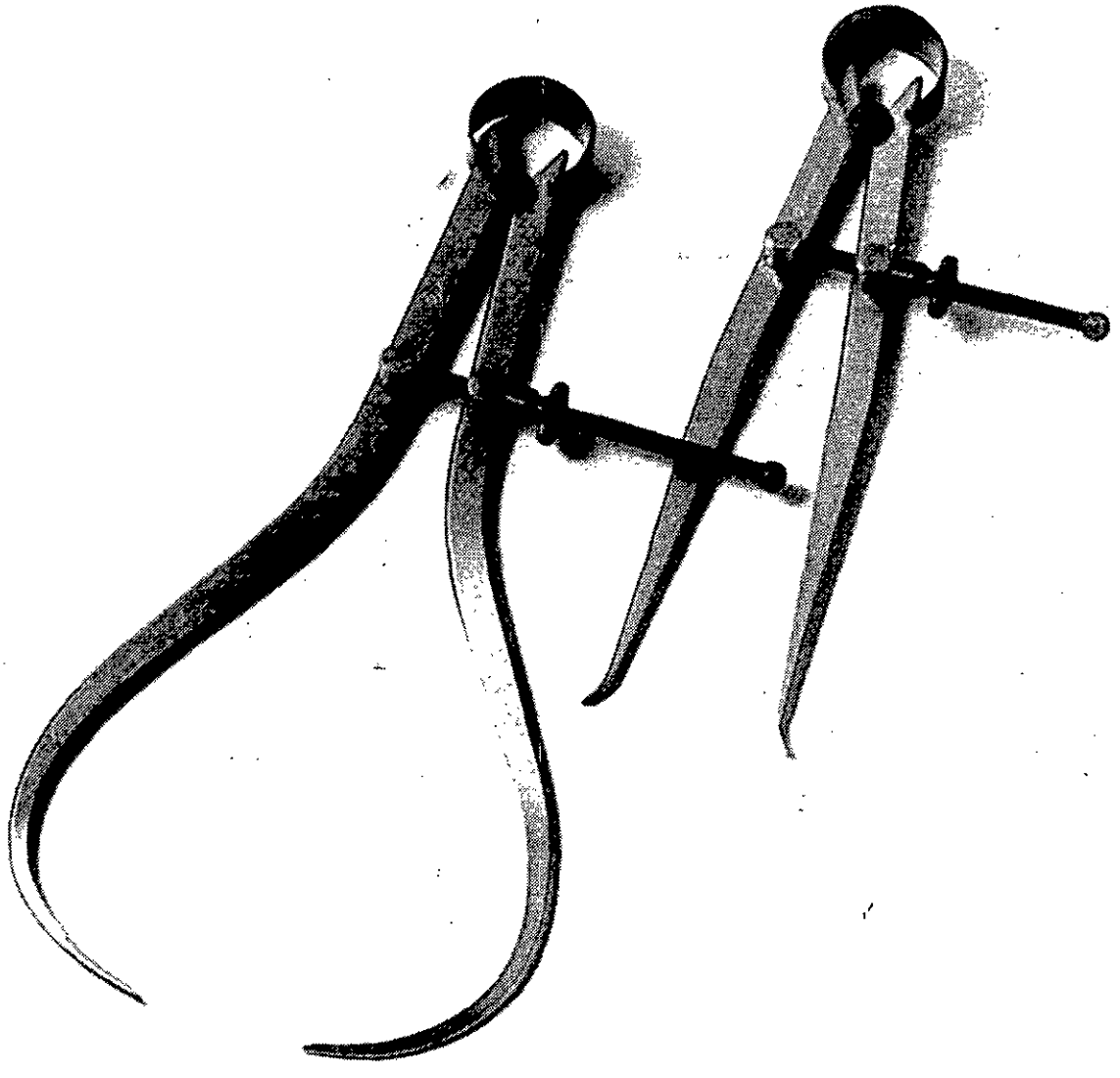

Compliments of MITUTOYO/MTI Corporation.

Figure 3-11. Inside and Outside Calipers

Another type of caliper known as a transfer caliper, shown in Fig. 3-12, is used in situations in which the legs, once set, must be moved to withdraw the instrument from the work. The transfer is accomplished through the use of a stationary auxiliary arm attached to one leg. Once the caliper is adjusted to the work, the auxiliary arm is set to make contact with the movable leg. The auxiliary arm then indicates the position to which the movable leg must be returned to transfer the measurement accurately.

Measurements transferred with calipers are subject to the accuracy limitations of the measuring instruments used. For example, calipers set with a micrometer will be more accurate than those set with a steel rule. In both cases, however, additional inaccuracies may be introduced by leg movement during transfer.

3.3.2 DIVIDERS

The divider, shown in Fig. 3-13, is a transfer device used primarily as a scribe. Arcs, radii, or circles are laid out on castings or machined parts from distances set from a rule. The divider consists of two sharply pointed

Downloaded from http://www.everyspec.com

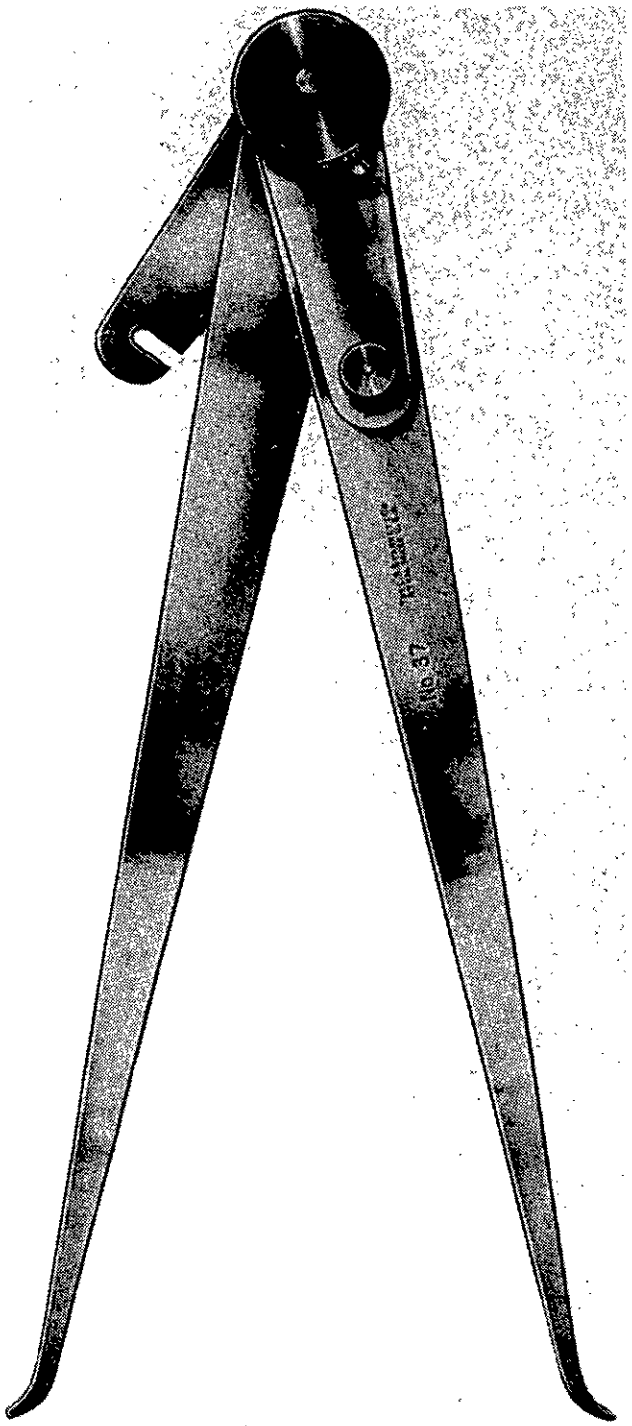

Courtesy of The L. S. Starrett Company, Athol, MA.

Figure 3-12. Transfer Caliper

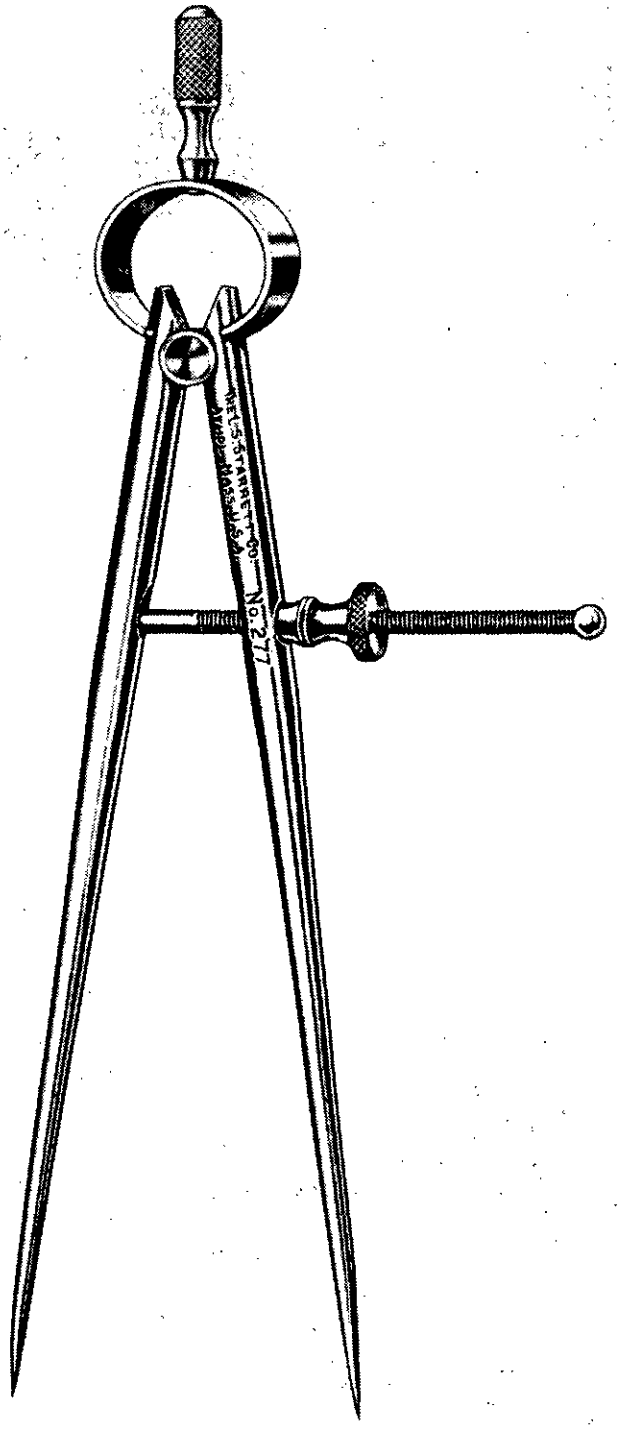

Courtesy of The L. S. Starrett Company, Athol, MA.

Figure 3-13. Divider

legs that are held apart by a spring or friction (firm) joint, and an adjusting screw is often provided. As with calipers, dividers are categorized by the type of leg connection, and the two major types are known as spring and firm joint dividers. These dividers are available in sizes from 2 to 12 in. Previous comments relating to the accuracy of calipers also apply to dividers; however, divider points must be kept sharp to insure accuracy.

Downloaded from http://www.everyspec.com

Another transferring device that is neither a caliper nor a divider is the hermaphrodite caliper. It has one leg of a divider, and the other is the curved leg of a caliper. This device is used for scribing a line parallel with an edge and for locating the centers of barstock. Even though its use is limited to these specialized applications, it is a very important tool.

3.3.3 BEAM TRAMMELS

A beam trammel is a multipurpose transferring device that performs the same functions as dividers and calipers and is subject to the same accuracy limitations. A beam trammel consists of a steel or wooden beam to which "trams" can be fastened. For improved accuracy one of the trams may be equipped with a fine adjustment screw. The instrument can be configured as a divider, inside or outside caliper, or hermaphrodite caliper by mounting various accessories on the trams. A beam trammel configured with divider points is shown in Fig. 3-14, and several accessories are shown in Fig. 3-15. The hollow hemispherical accessories are centering devices that enable a dimension to be taken from the center of a hole.

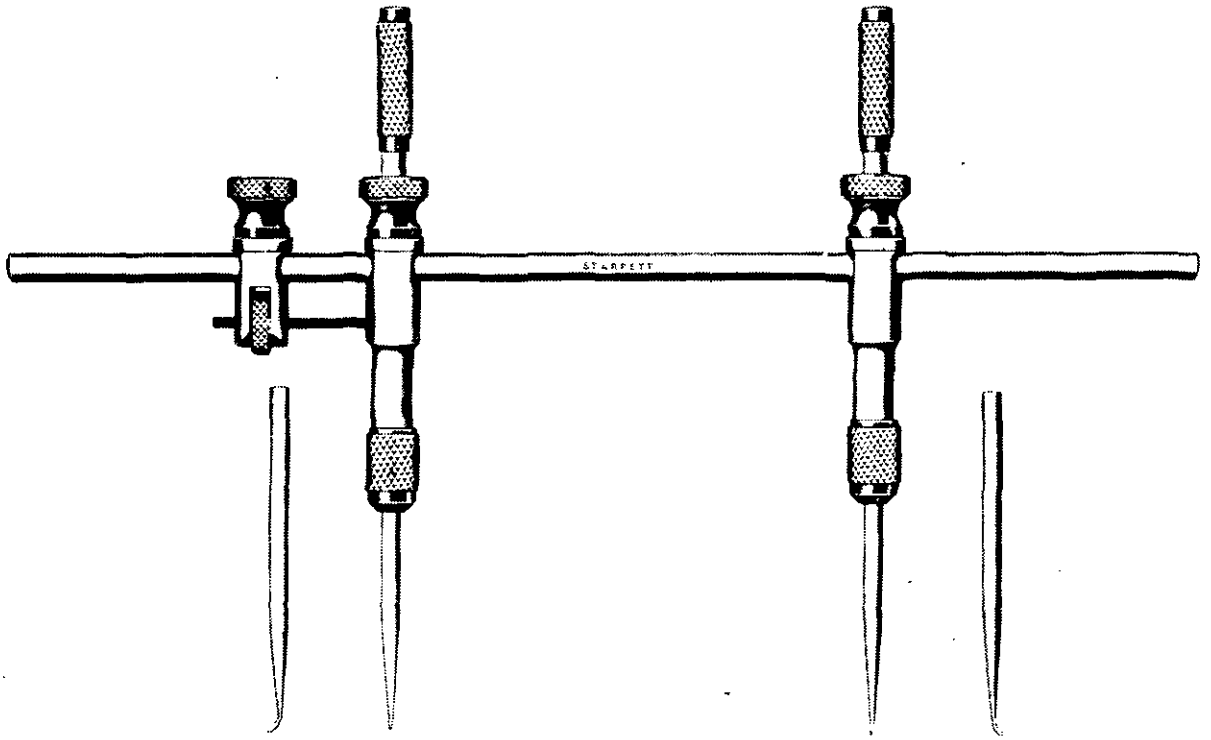

Courtesy of The L. S. Starrett Company, Athol, MA.

Figure 3-14. Beam Trammel

The usual range of beam trammels is from a few inches to 2 ft, although this range can be increased through the use of extenders. Thus its customary use is for dimensions beyond the normal range of dividers and calipers.

3.3.4 SPLIT SPHERE AND TELESCOPING GAGES

Split sphere and telescoping gages are not gages in the sense that the term is used in this handbook. Rather, they are transferring devices used to transfer inside dimensions. Also both are expanding devices operated by a

Downloaded from http://www.everyspec.com

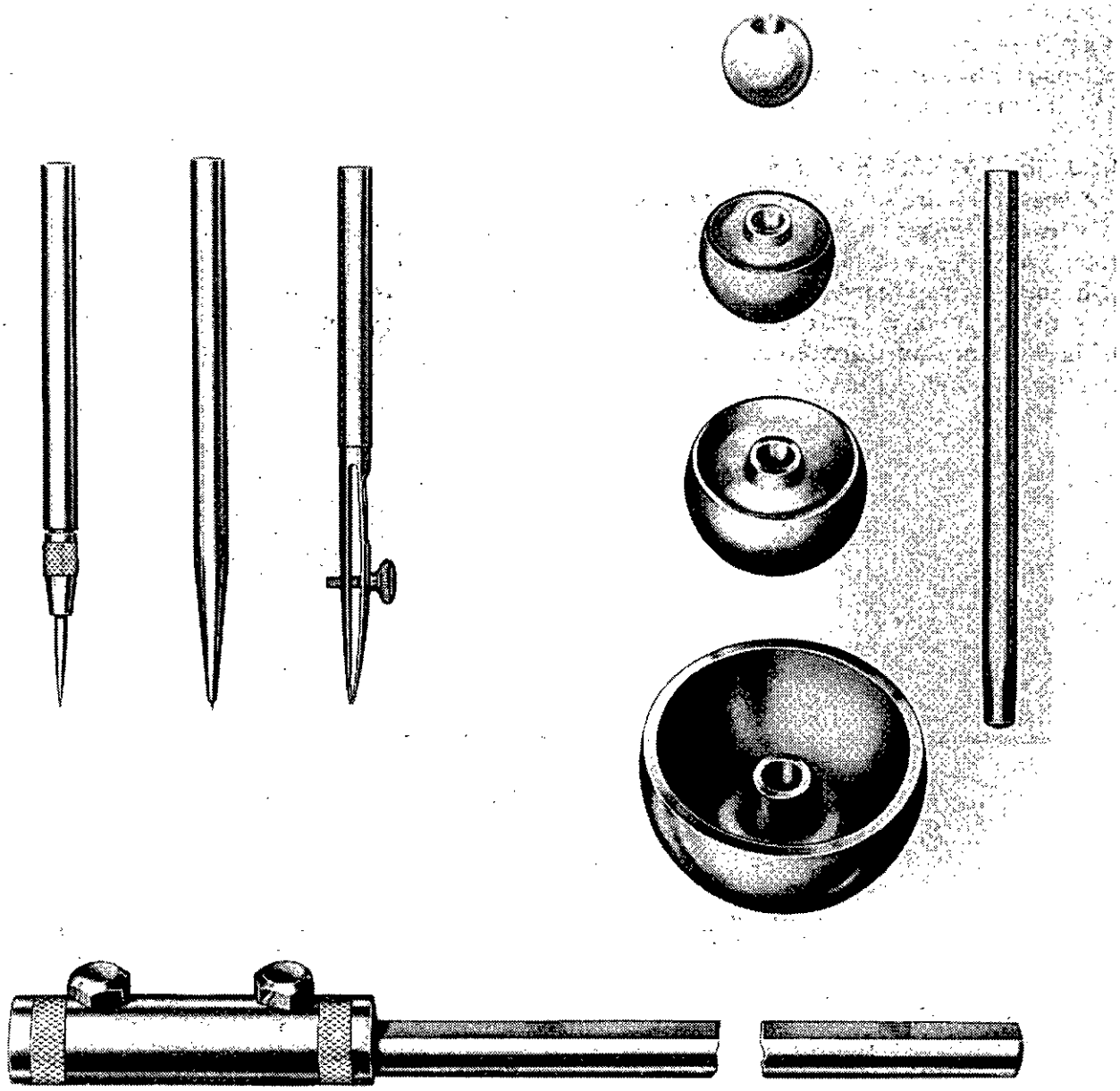

Courtesy of The L. S. Starrett Company, Athol, MA.

Figure 3-15. Beam Trammel Accessories

screw. The split sphere gage, four of which are shown in Fig. 3-16, uses a split hollow sphere to record the dimension. The range of these instruments is usually 0.125 to 0.5 in.

A telescoping gage is shown in Fig. 3-17. The expandable portion is a hollow cylinder that opens and closes in the same manner as a telescope. This instrument is used for dimensions from 0.25 to 6 in. As with other transferring devices, the accuracy of split sphere and telescope gages depends primarily on the accuracy of the instrument used to measure or set the dimension. An inside dimension measured from a split sphere gage with an outside micrometer will be more accurate than will the same dimension measured with a vernier caliper.

Downloaded from http://www.everyspec.com

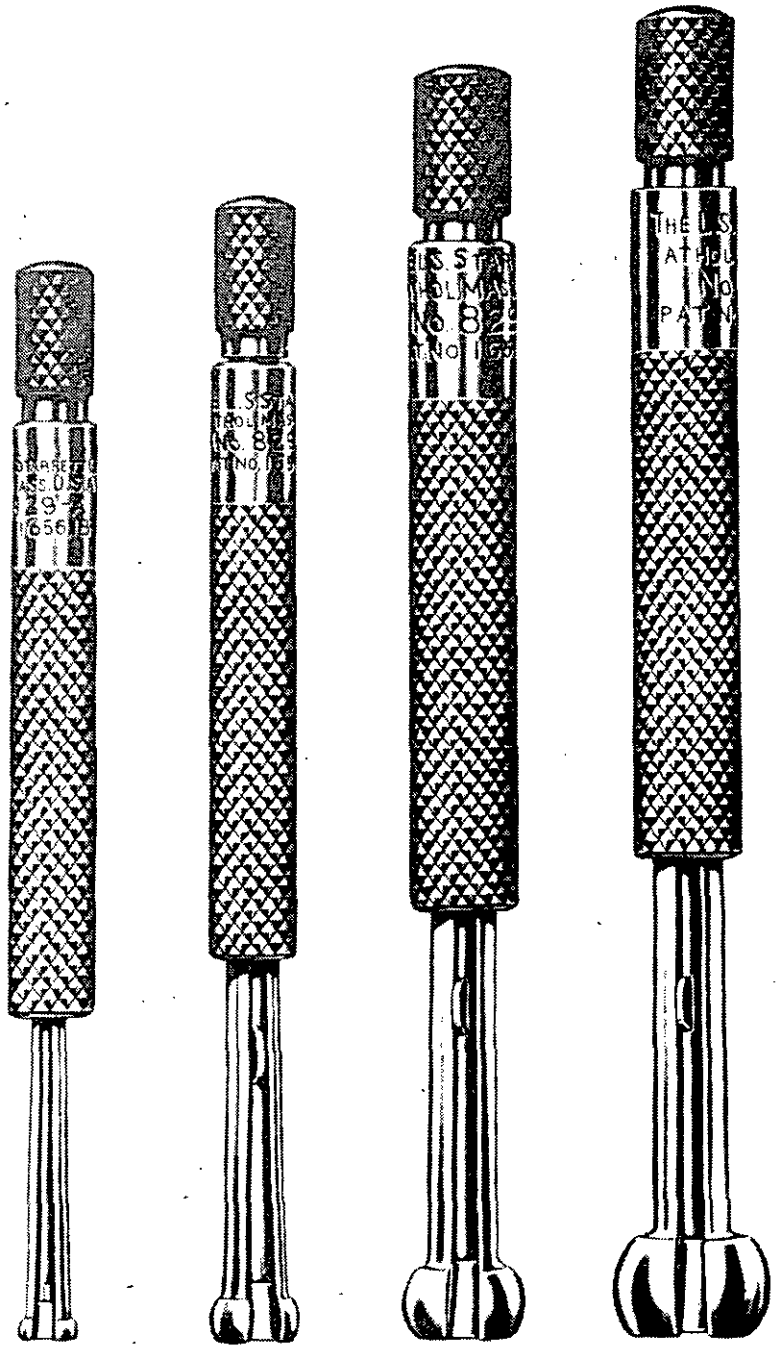

Courtesy of The L. S. Starrett Company, Athol, MA.

Figure 3-16. Split Sphere Gages

3.4 SURFACE PLATES AND ACCESSORIES

3.4.1 SURFACE PLATES

A surface plate is a massive block of cast iron or granite that has been finished to a very high degree of flatness and is used as a platform upon which to perform inspections. The surface plate itself only provides a stable, flat, and firm surface for reference. Actual measurements are accomplished with measuring instruments or accessories that are mounted on or used in conjunction with the surface plate and take

Downloaded from http://www.everyspec.com

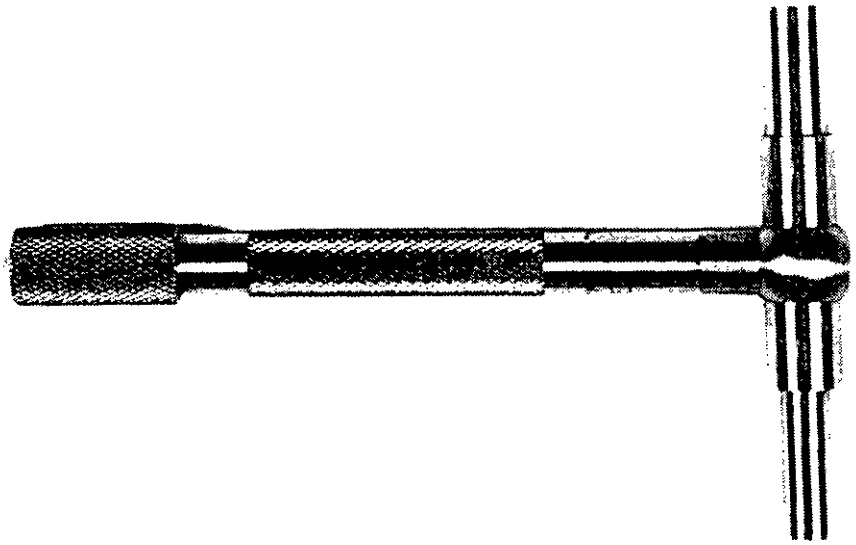

Courtesy of DoALL Company.

Figure 3-17. Telescoping Gage

advantage of its accurate flatness. Examples of these instruments and their applications are contained in subsequent paragraphs. Generally, measurements are taken from the surface plate up. Thus the surface plate serves as a datum for the inspection.

Cast iron surface plates are available in sizes ranging from 8 in.×10 in. and weighing 22 lb to 48 in.×144 in. and weighing 6000 lb. Ribbed castings are used to enhance rigidity. Legs are also part of the casting and make the platform more stable by preventing rocking.

There is no American standard covering the size or accuracy of cast iron surface plates, but American gage manufacturers generally guarantee that deviations from the mean plane of cast iron surface plates will not exceed 0.0002 in. per ft and that there will be an average of 18 bearing spots per in^2. Usually the surface is prepared by planing or hand scraping because grinding and lapping result in a surface finish that tends to cause the surface plate and other flat objects to wring together.

Typical granite surface plates are shown in Fig. 3-18. Granite surface plates, covered in Federal Specification GGG-P-463 (Ref. 1), offer several advantages. Granite is granular in structure and is composed of quartz, a very hard material, and softer materials such as feldspar and mica. When lapped, the softer materials are abraded more quickly and leave natural bearing points of the harder quartz. The resulting surface permits gage blocks, instruments, and tools to slide easily across the surface without wringing or freezing. Granite is also harder than cast iron and chips rather than distorts if objects are dropped on the surface. Distortion affects the accuracy of a cast iron surface plate, but minor chipping does not affect the accuracy of a granite surface plate. Granite surface plates have low coefficients of thermal expansion and are not appreciably affected by ordinary temperature changes. Because abrasives will not imbed in the surface, they can be used in proximity to grinding operations. The fact that granite is rustproof and nonmagnetic is also an advantage. Granite surface plates for general machine shop applications are available in sizes from 8 in.×12 in. to 72 in.×144 in. and with flatness accuracies from 0.0005 to 0.004 in.

The accuracy of a surface plate obviously affects the accuracy of any measurements taken directly or indirectly from that datum. If damaged, granite surface plates can sometimes be relapped. Cast iron surface plates can be refinished to restore their accuracy, but rescraping is an expensive operation done by hand. Proper care and use of a surface plate is the preferred alternative. The major sources of error in surface plate use can be avoided if the following commonsense precautions are observed:

1. Surface plates should be kept free of oil and grit and should be covered when not in use. For rough castings, forgings, and other large work, use of parallels (See par. 3.4.4.) will protect the surface plate from imbedded grit or hard scale that may be on the workpiece.

Downloaded from http://www.everyspec.com

Courtesy of DoALL Company.

Figure 3-18. Granite Surface Plates

2. Heavy parts, blocks, and tools should be slid from the edge of the plate into working position. This practice tends to push foreign material out of the way and also minimizes the risk of dropping an object on the surface plate, which would scratch or otherwise mar the surface.

3. Accessories should not be left on or clamped to a cast iron surface plate for an extended time because of the increased likelihood of corrosion.

3.4.2 GAGE BLOCKS

Gage blocks are blocks of a precisely known width or length made of hardened alloy steel, tungsten carbide, or chromium carbide. They are usually square or rectangular in cross section, and their measuring surfaces are lapped and polished until optically flat. The distance between the measuring surfaces is the dimension of the block, and in gage terminology it is called the length. Gage blocks are commonly used as (1) basic measuring instruments and (2) standards for calibrating other instruments, and they are available individually or in sets of blocks that range in size from 0.01 to 20 in. Different dimensions are obtained by wringing together blocks whose lengths sum to the desired dimension. Because of their resistance to wear and resulting long life, chromium-plated blocks often are used in working sets of blocks. Although complete sets of solid carbide blocks are manufactured, such blocks are most often used as wear blocks at each end of a stack because of their excellent wear resistance.

Gage blocks are the customary industrial standards of length. Normally, a hierarchical system of primary and secondary standards is used. Such a system conforms to the calibration system requirements introduced in par. 2.5.6. The primary standard is a set of master gage blocks used only to check the accuracy of working sets.

Downloaded from http://www.everyspec.com

These master gage blocks are certified to a secondary standard or grand master set of blocks. The grand master set, in turn, is traceable to or certified by the National Institute of Standards and Technology.

Federal Specification GGG-G-15, *Gage Blocks and Accessories (Inch and Metric)* (Ref. 2), prescribes gage blocks for use by the Federal Government. This specification classifies gage blocks according to the following criteria: (1) style, (2) grade, and (3) class and type. Style refers to the shape of the block, grade to the accuracy, and class and type to the material of construction and surface coating. There are two types of grades, namely, tolerance grades and accuracy grades. Tolerance grades pertain to block length, and accuracy grades pertain to flatness and parallelism and are specified only when a specific accuracy is required over the entire gaging surface. The specified classifications are

1. Styles (Shapes):
   Style 1. Rectangular
   Style 2. Square, with center accessory hole
   Style 3. Other shapes as specified
2. Grades:
   a. Tolerance Grades:
      Grade 0.5. (Formerly Grade AAA)
      Grade 2. (Formerly Grade AA)
      Grade 3. (Compromise between former Grades A and B)
   b. Accuracy Level Grades:
      Accuracy level grade 1 μin.
      Accuracy level grade 2 μin.
3. Classes and Types (Material):
   Class I. Steel
   Class II. Faced blocks, steel
      Type (1) Chromium-plated
   Class III. Carbide
      Type (1) Chromium carbide
      Type (2) Tungsten carbide.

Tolerances on length range from ± 1.0 μin. to $+8.00$ μin. and -40.0 μin., depending upon tolerance grade and gage block size.

The total error in a stack of blocks rarely exceeds twice that of a single block because the allowable error is in both directions and a random assembly of blocks will contain both long and short blocks.

Blocks of angular construction can be stacked similarly to build any angle between 0 and 90 deg. Angular gage blocks are used for many applications—including checking the dividing accuracy of rotary tables and dividing heads, setting tools or work stands at the desired angle, and inspecting angular features of products. Flexibility in building angles is achieved by the additive and subtractive properties of a pair of angles. As illustrated in Fig. 3-19, for example, a 30-deg block and a 15-deg block can be stacked to form angles of 15 deg and 45 deg. When a stack of blocks is wrung together, a compounding error can be introduced if the blocks are not aligned properly. For this reason, side faces are made perpendicular to working faces within 30 sec or better. Thus a stack can be readily checked visually for a common virtual vertex by verifying that block sides align as shown in Fig. 3-20. This is commonly accomplished with angle blocks. Angle blocks are discussed in par. 3.4.5.

Proper use and care are essential to maintaining the accuracy of any gage block. Gage blocks arrive from the manufacturer with a coating of rustproofing that must be removed prior to use. As with other instruments, the presence of grease, oil, or grit will affect accuracy. Particular care should be observed when gage blocks are used to measure hardened products because if the object to be measured is as hard as the measuring surface of the block, the danger of scratching the measuring surface is greatly increased.

3.4.3 HEIGHT GAGES

As noted in par. 3.2.1, a height gage is a variation of the basic steel rule. The height gage is so universally associated with surface plates, however, that it is considered an accessory. A height gage equipped with a

Downloaded from http://www.everyspec.com

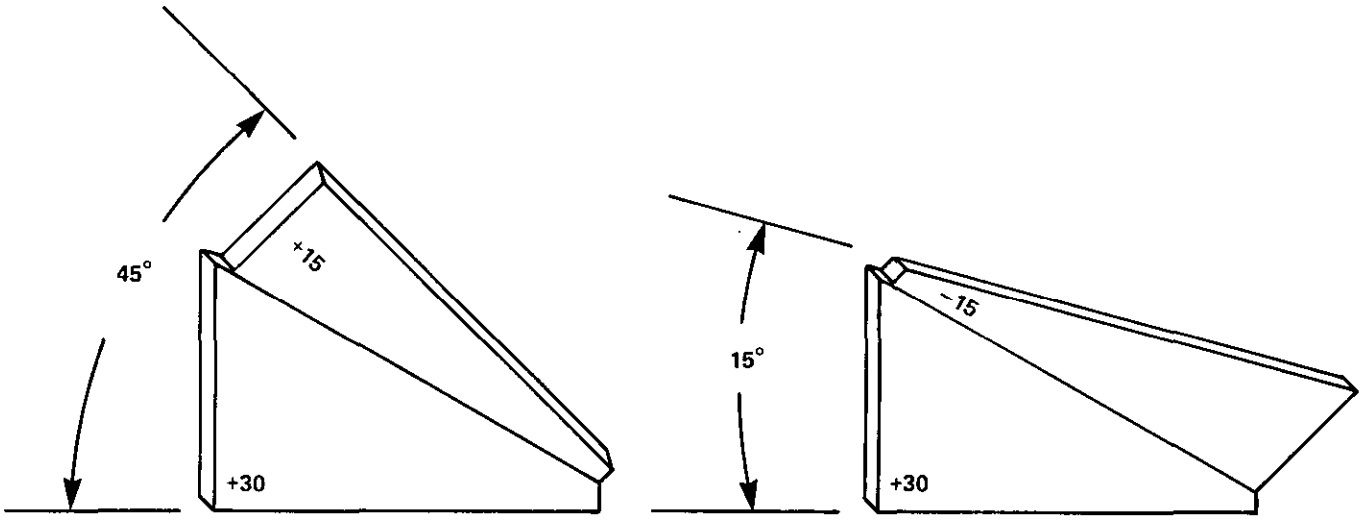

(A) For a 45° Angle (B) For a 15° Angle

Figure 3-19. Use of Angular Gage Blocks

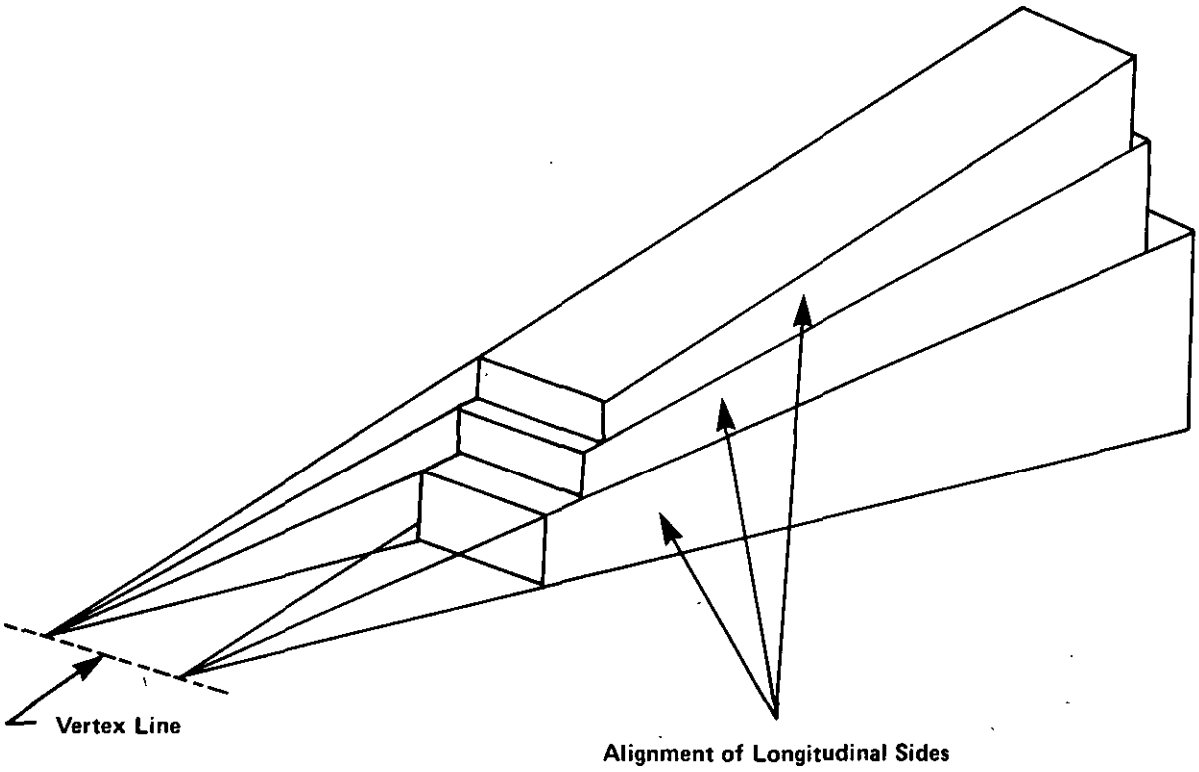

Figure 3-20. Proper Alignment of Angular Gage Blocks

vernier scale is shown in Fig. 3-21. The gage consists of a base, a graduated beam, and a sliding frame equipped to accept several attachments. The height gage in Fig. 3-21 is configured with an adjustable jaw assembly. In addition, height gages can be used with dial indicators and scribing or depth gage attachments. Measurements can be made under a surface if the indicator is used.

Downloaded from http://www.everyspec.com

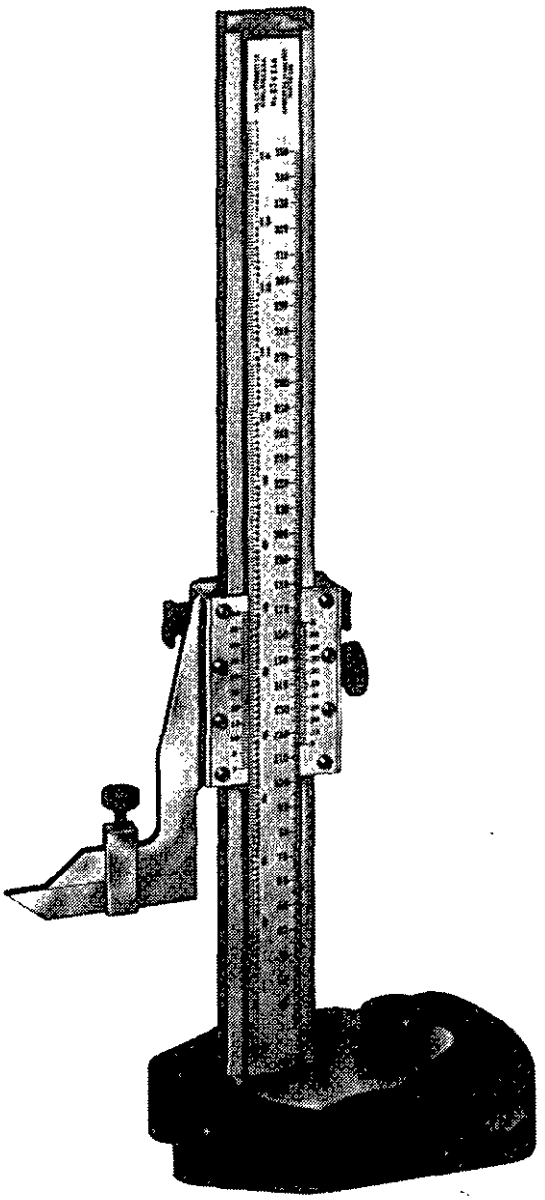

Courtesy of The L. S. Starrett Company, Athol, MA.

Figure 3-21. Height Gage With Vernier Scale

The height gage is an extremely versatile tool. It can be used in layout work, as a measuring instrument, or as a gage. Measurements can be obtained when the difference between readings taken at both ends of the product is calculated or when the height of the gage is raised with gage blocks to create an arbitrary zero position. If several parts are to be inspected, a height gage with either an adjustable jaw or a dial indicator can serve as a gage to make a pass or fail determination without the operator's knowledge of the actual product dimension.

Height gages are available in heights of 10 in., 18 in., and 24 in. and are generally accurate within 0.001 in. However, accuracy can be affected adversely by dirt or grit; damage to the height gage base; and wear, warp, or lack of parallelism of accessories. Proper use and care will prevent most of these problems. As with steel rules, alignment is the major source of error, particularly for instruments without vernier scales.

Downloaded from http://www.everyspec.com

3.4.4 PARALLELS

Parallels are divided into three categories—bar parallels, box parallels, and tapered parallels. The first two types are used primarily to support objects for inspection on a surface plate. The third type, tapered parallels, is actually a type of transferring device.

Bar parallels are shown in Fig. 3-22 and box parallels in Fig. 3-23. Bar parallels are used for smaller products and are available in sizes from 6 in. to 12 in. long and 1 in. to 3 in. wide, and they are usually made of hardened alloy steel or granite. Their height variations are finished within 0.0002 in., and their sides are parallel within 0.0001 in. in 6 in. Bar parallels usually are supplied and used in matched pairs to reduce the possibility of error that results from machining to different limits within the tolerance zone.

Box parallels are used for larger workpieces. Another common use is as an elevated base for a height gage that, in effect, increases the range of the height gage. Box parallels are made of cast iron or granite and are available in lengths of up to 16 in. and in various rectangular and square sizes from 4 in.×4 in. to 6 in.×14 in. Because of their size, box parallels are not as accurate as bar parallels. (Their height variations are within 0.0005 in., and their sides are parallel within 0.00025 in. in 6 in.). A complete specification for box parallels must include a tolerance for squareness—normally 0.0005 in. in 6 in.

Tapered parallels are used for an entirely different purpose than bar or box parallels. As previously mentioned, they are actually transfer devices used to record an internal dimension. As Fig. 3-24 shows, when used as a pair, these blocks provide two parallel surfaces and a mechanism for varying the distance between them. The surfaces that contact the workpiece are rounded to insure a linear contact when a hole diameter is measured, but tapered parallels are equally useful for checking the width and parallelism of slots and for establishing the center distance between holes. The most common means of measuring the dimension recorded by the parallels is with a micrometer. The accuracy of tapered parallels depends primarily upon the accuracy of the measuring instrument, although wear, nicks, and burrs can cause errors. Tapered parallels are available for dimensions from 0.125 in. to 2.25 in.

3.4.5 ANGLE BLOCKS

Angle blocks are accessories that provide a perpendicular surface against which a workpiece may be rested or clamped. They are also known as angle plates and are commonly used in machining operations as well as during inspection.

The basic angle block is the universal right angle block shown in Fig. 3-25. Other types of angle blocks are variations that have been developed for specific purposes. The universal right angle block is available in many sizes, ranging from 3.75 in. × 4 in. × 5 in. to 8 in. × 9 in. × 16 in. Small angle blocks are accurate within 0.0002

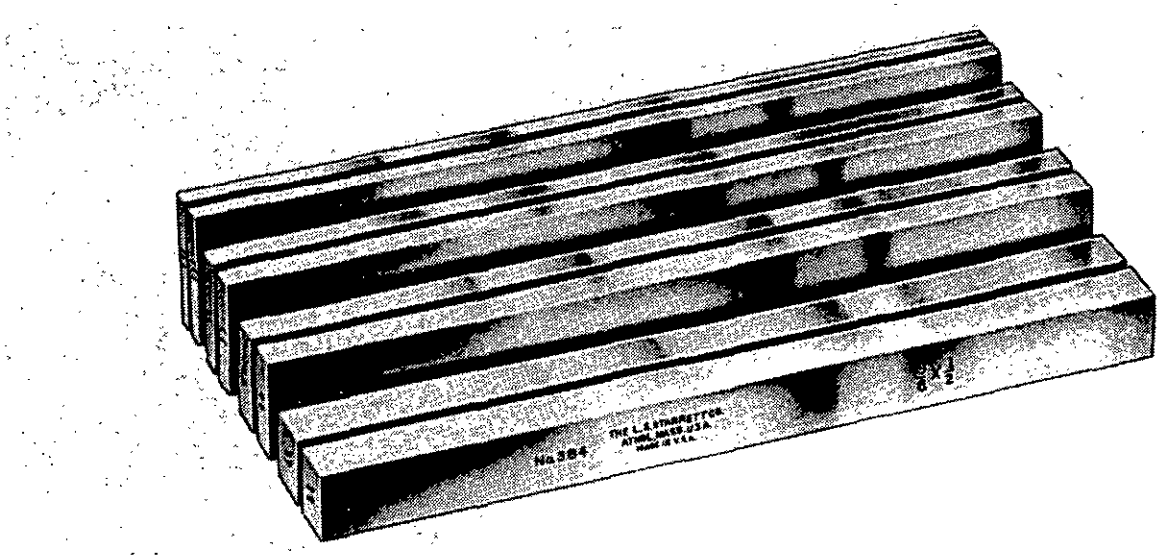

Courtesy of The L. S. Starrett Company, Athol, MA.

Figure 3-22. Bar Parallels

Downloaded from http://www.everyspec.com

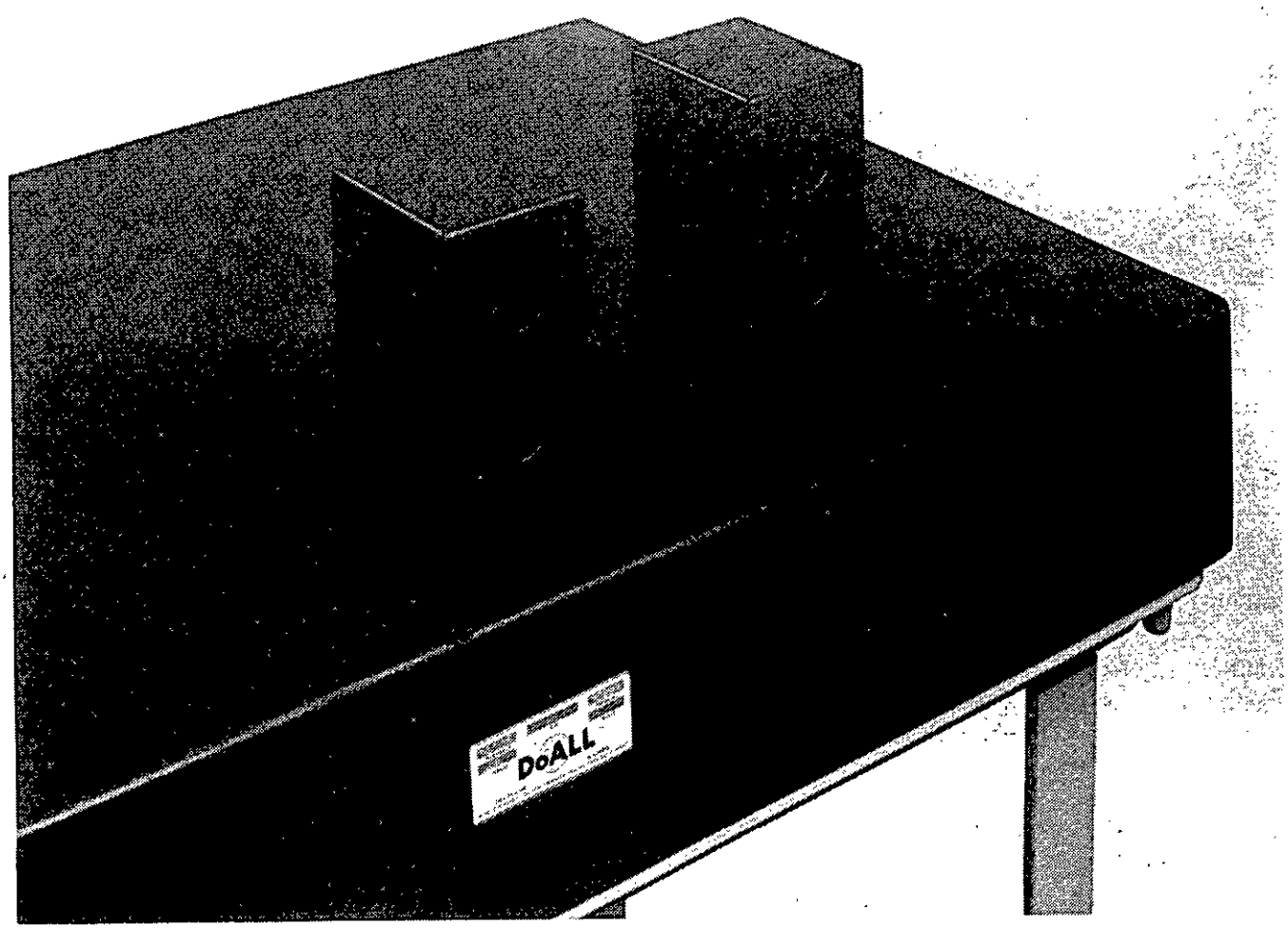

Courtesy of DoALL Company.

Figure 3-23. Box Parallels

Downloaded from http://www.everyspec.com

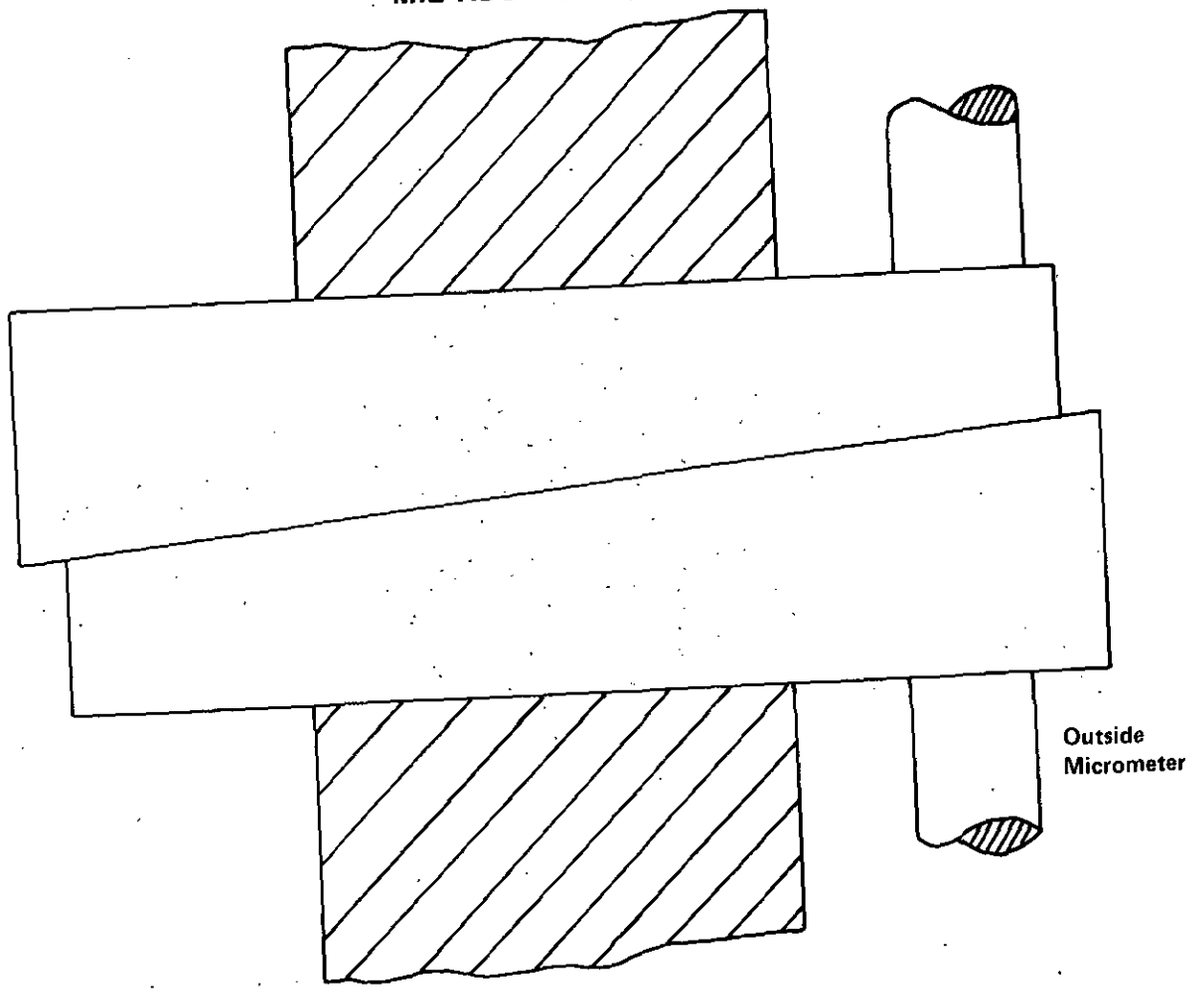

Figure 3-24. Tapered Parallels Used to Measure Inside Diameter

Downloaded from http://www.everyspec.com

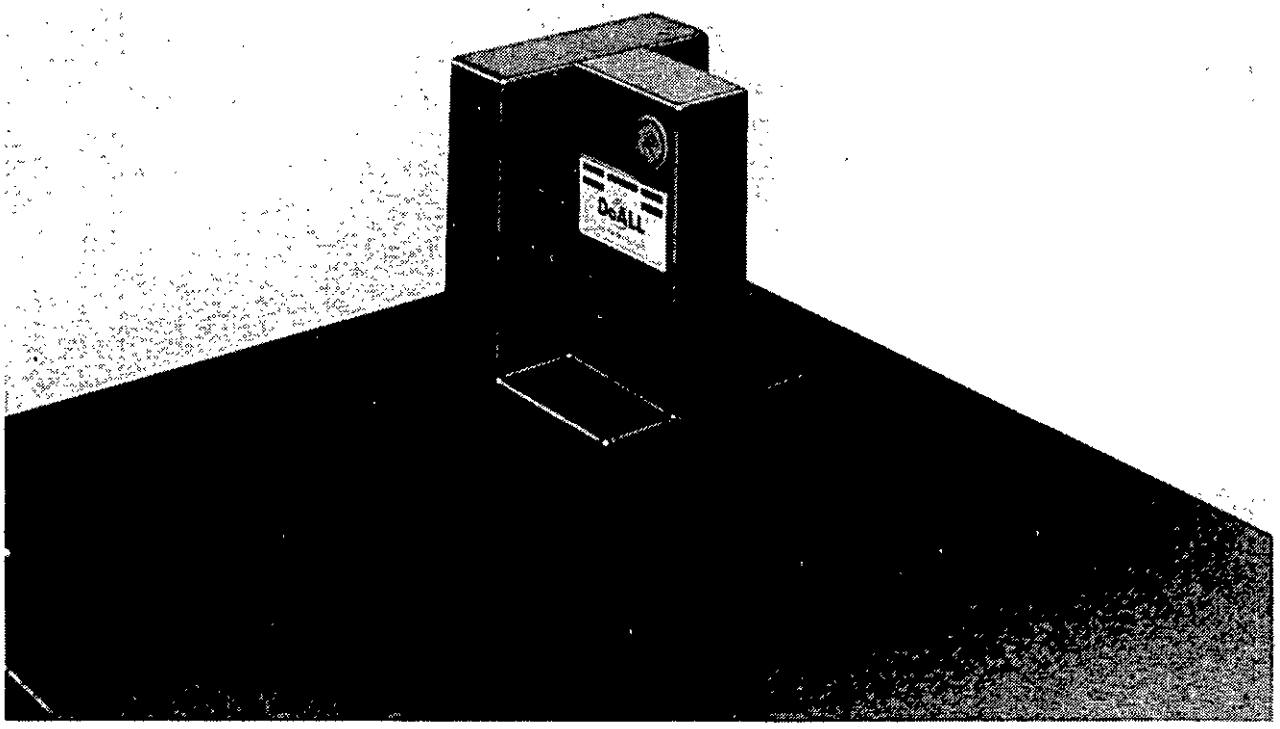

Courtesy of DoALL Company.

Figure 3-25. Universal Right Angle Block

in., and the larger ones are guaranteed within 0.0003 in. Because of their accuracy, these instruments are also used as height blocks on a surface plate.

Slotted angle blocks, as the name implies, have slots cut in the legs. These slots facilitate the bolting of products to the blocks. They are particularly useful for heavier parts and are available with leg sizes from 4 in. to 16 in. and in widths from 5½ in. to 18 in. A slotted angle block is shown in Fig. 3-26.

The measuring iron shown in Fig. 3-27 is a narrow angle block equipped with a bolt with which it can be fastened to a surface plate or machine table. Its primary purpose is to provide a vertical surface from which horizontal distances can be measured. Because these irons are narrow and do not require much table space, they are frequently used as jigs for machining operations.

A toolmaker's knee, shown in Fig. 3-28, is an angle block used for small precision products. The sides and faces are ground square within 0.0001 in. The legs are of different lengths—usually 2.5 in. × 3 in. and 2.5 in. × 4 in.—to accommodate workpieces of different size.

3.4.6 V BLOCKS

A V block is a precisely made rectangular parallelepiped of hardened tool steel into which two V grooves have been cut. A pair of blocks is shown in Fig. 3-29. Its major purposes are to restrain cylindrical products and precisely locate their axes. V blocks commonly are used in the inspection of runout and other requirements for which a cylindrical product must be rotated about its axis. V blocks are also used in layout and machining.

V blocks are usually sold in pairs and, as shown in Fig. 3-29, come with a pair of clamps that are removable when the clamp screw is released. The sides and ends of the blocks are square or parallel within 0.0002 in., and the groove faces are square or parallel to the other surfaces within 0.0003 in. Thus V blocks can be used lying flat, turned on the side, or standing vertically. The most common angle of the V is 90 deg, although blocks with angles of 60 and 120 deg are available for special purposes such as inspecting round products for triangle effect and for inspecting three-fluted drills.

Downloaded from http://www.everyspec.com

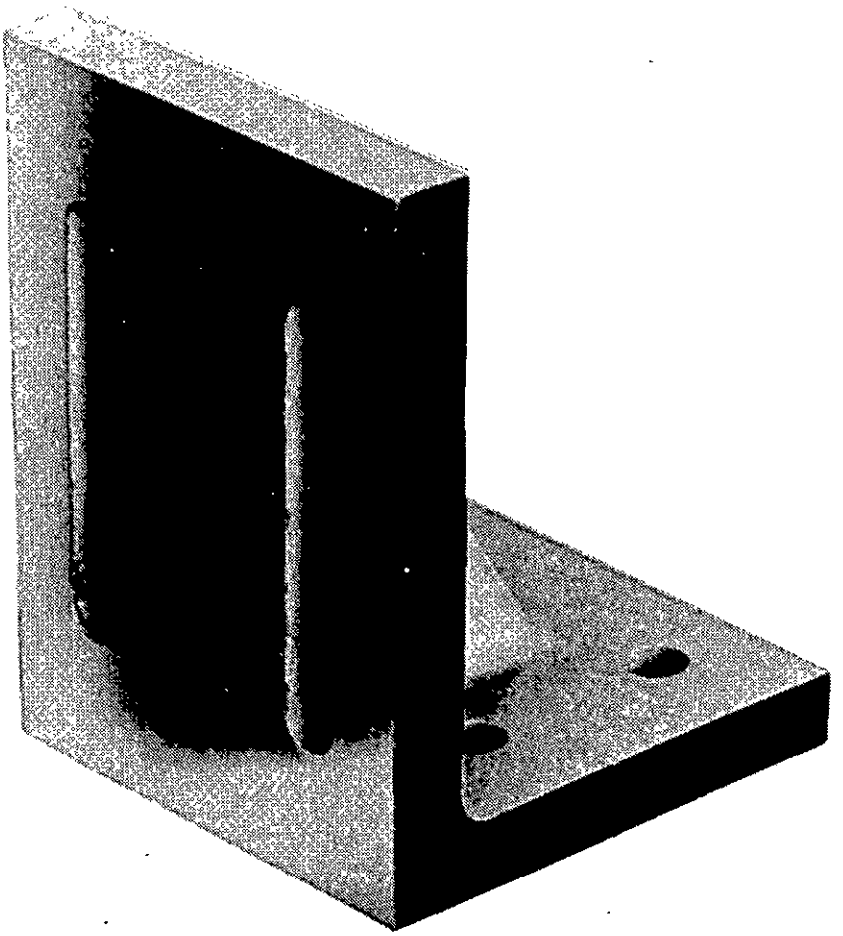

Courtesy of Taft-Peirce Manufacturing Company, Cumberland, RI.

Figure 3-26. Slotted Angle Block

Downloaded from http://www.everyspec.com

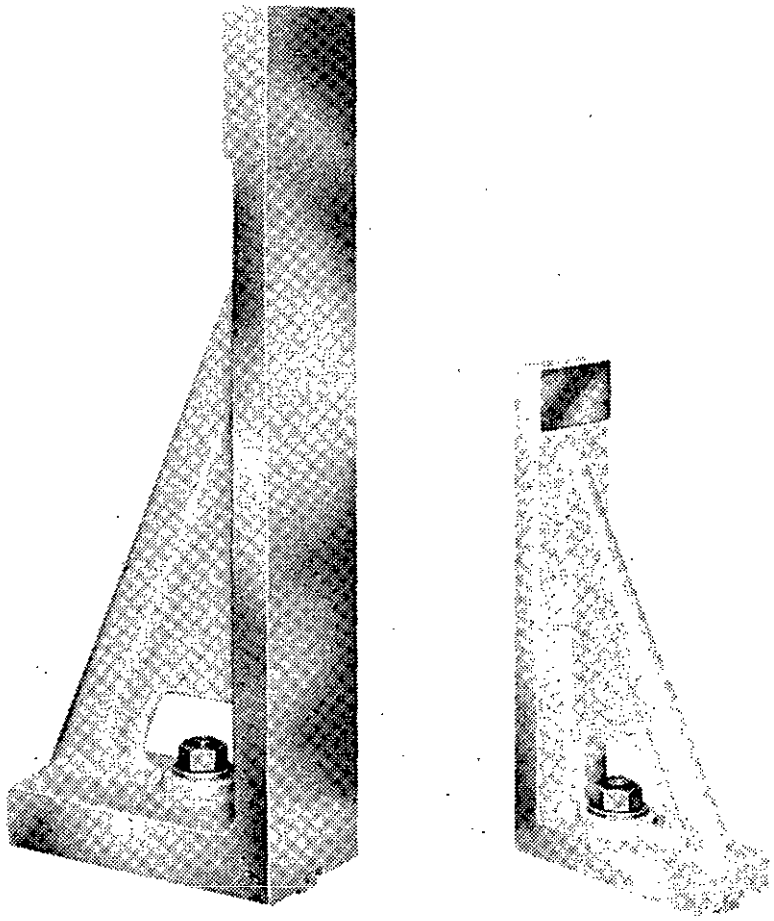

Courtesy of Taft-Peirce Manufacturing Company, Cumberland, RI.

Figure 3-27. Measuring Iron

Downloaded from http://www.everyspec.com

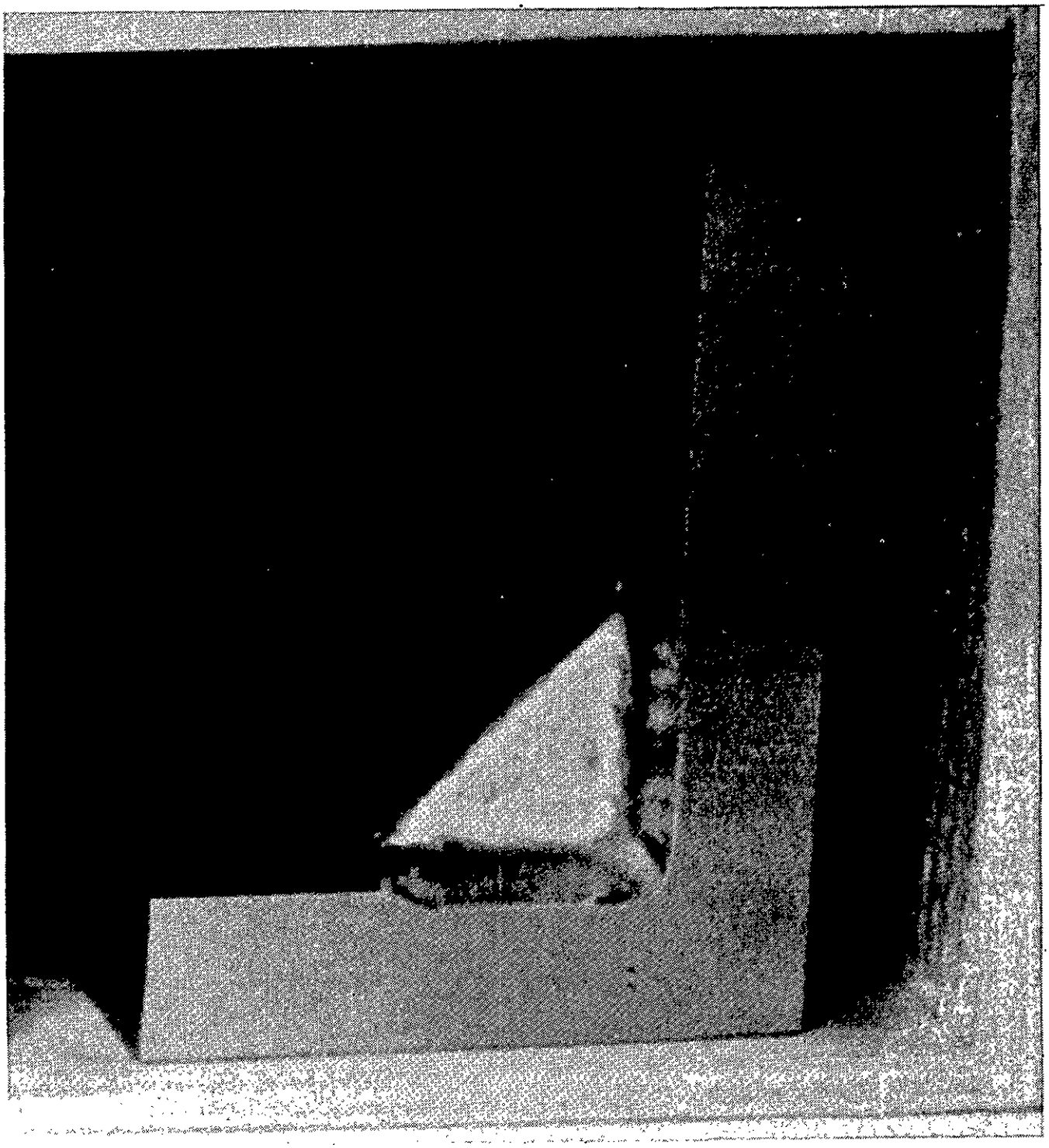

Courtesy of Taft-Peirce Manufacturing Company, Cumberland, RI.

Figure 3-28. Toolmaker's Knee

Downloaded from http://www.everyspec.com

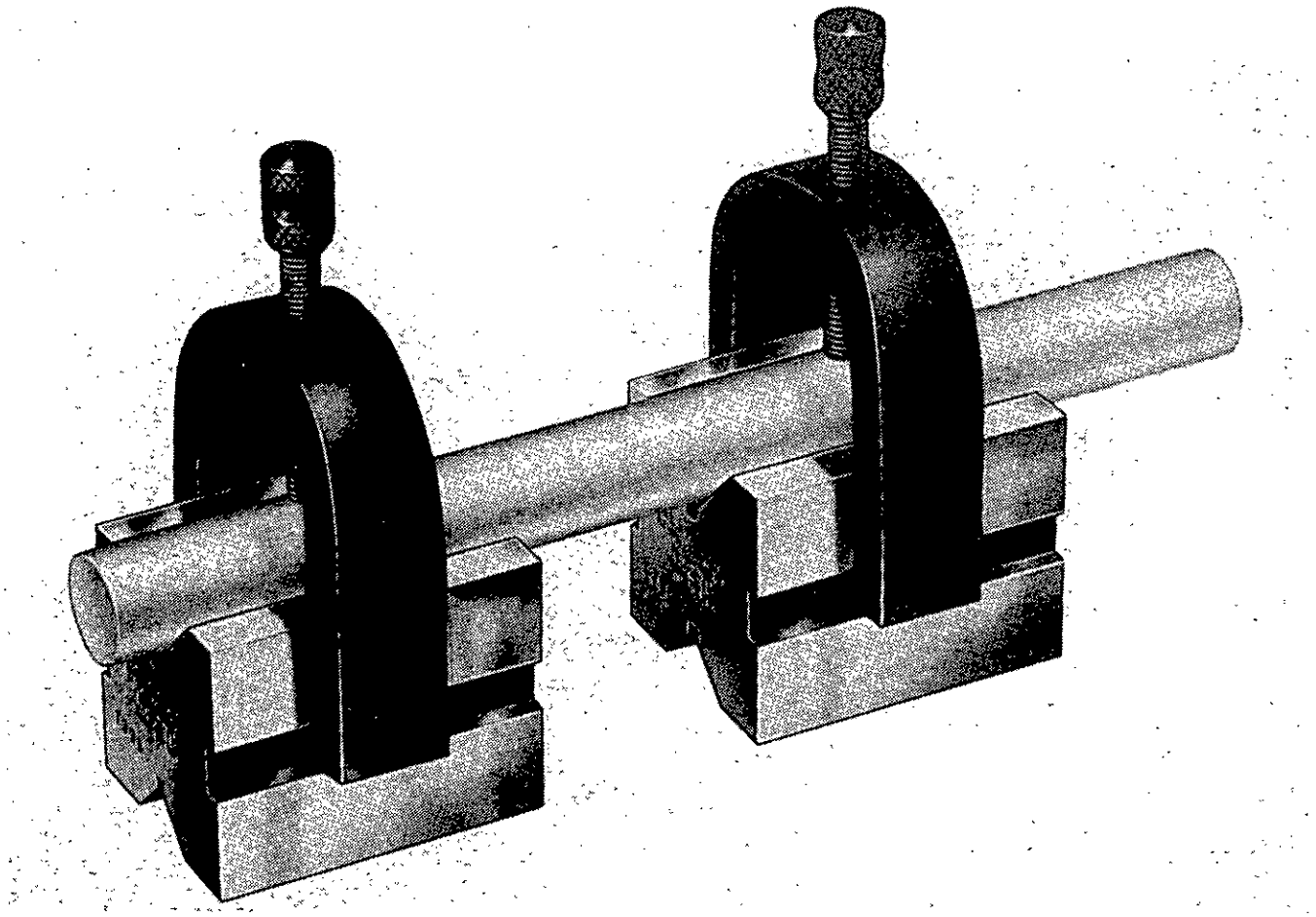

Courtesy of The L. S. Starrett Company, Athol, MA.

Figure 3-29. V Blocks

A major drawback of V blocks is they are unreliable if the product being inspected is out of round. This condition, also known as lobing or the triangulation effect, is caused by manufacturing operations such as centerless grinding. Two or more lobes may result. When out of round products are inspected in an open setup with a V block, there is a difference between the measured and effective diameter. The magnitude of the error depends on the spacing and height of the lobes. Each V angle is sensitive to specific lobing conditions and masks others. For example, a 60-deg V block magnifies the diameter of a 3-lobed product, whereas a 5- or 7-lobed product in the same V block appears perfectly round.

Abuse, corrosion, lack of cleanliness, and wear are the factors likely to affect the accuracy of V blocks. Periodic visual inspection and an occasional check for wear should suffice to insure good service.

3.4.7 SQUARES

Squares are used for assessing the perpendicularity of interrelated or adjoining surfaces. The four main types of squares are (1) steel squares, (2) granite blocks, (3) cylindrical squares, and (4) optical squares, which are discussed in par. 4.2.2.6. Precision steel squares are the most common and versatile of these instruments. They are either of one-piece construction or have a thin blade mounted in a beam as shown in Fig. 3-30. Although both types serve the same purpose, the one-piece square is sturdier and, therefore, more likely to retain its accuracy for a longer period of time. On the other hand, the thin blade square is manipulated more

Downloaded from http://www.everyspec.com

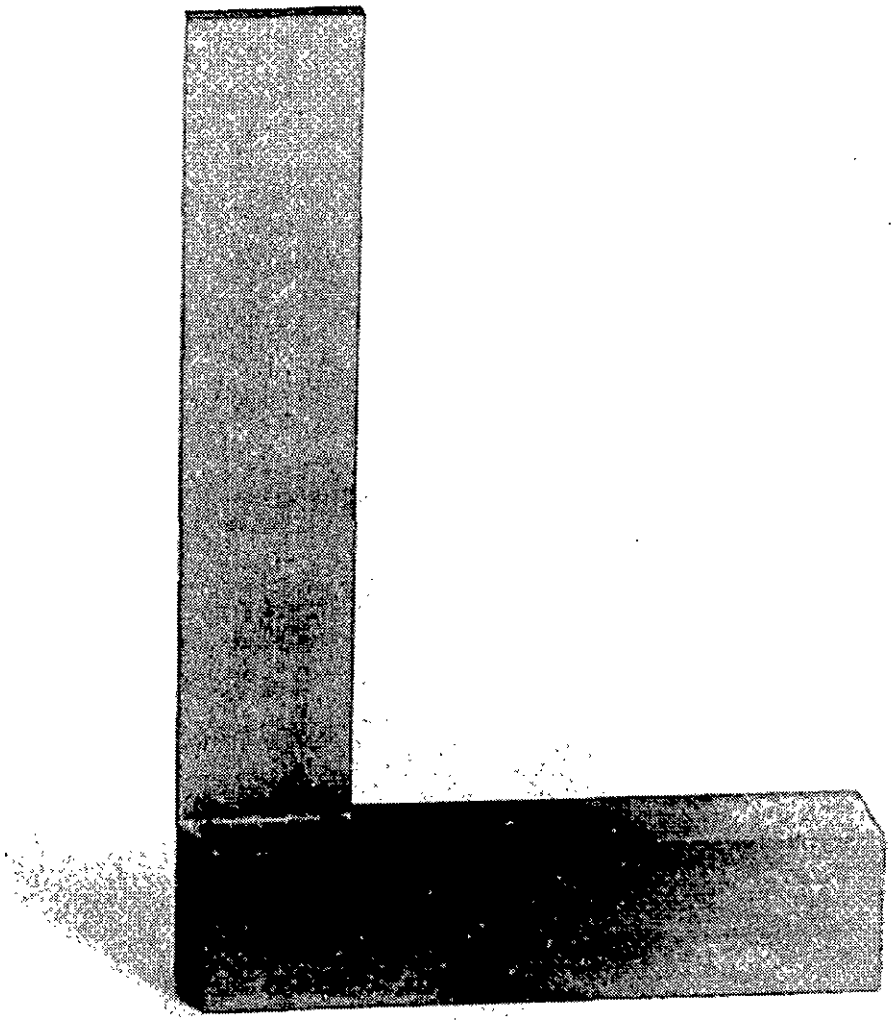

Compliments of MITUTOYO/MTI Corporation.

Figure 3-30. Thin Blade Steel Square

easily. Steel squares are available in sizes up to 20 in. × 36 in. Accuracy is expressed as the amount of allowable deviation per unit of blade length and is calculated by the equations that follow:

For straight edge squares

$$\text{Allowable deviation} = 0.00008 + \frac{\text{length}}{100{,}000} \text{ in.} \tag{3-1}$$

For bevel edge squares

$$\text{Allowable deviation} = 0.0002 + \frac{\text{length}}{50{,}000} \text{ in. (Ref. 3).} \tag{3-2}$$

Thus for a blade length of 8 in., the allowable deviation ranges from 0.00036 in. to 0.00016 in.

Downloaded from http://www.everyspec.com

For all squares except the optical square, perpendicularity is assessed by bringing the surface being inspected in contact with the perpendicular surface of the square. If the surface is perpendicular to its base, perfect contact between the surface and the instrument will result. If not, the contact will not be complete. A light source behind the setup facilitates viewing the gap between the surfaces. Normally, a gap of as little as 0.0005 in. can be detected visually in this manner. If the absolute value of departure from the perpendicular is required, the gap can be measured with a feeler gage (See par. 3.2.6.) at a specified distance from the base. Difficulty in measuring the gap and inaccuracies in the instrument are the major sources of error associated with the use of squares.

The main use of right-angle granite blocks is to provide very accurate perpendicular and parallel reference surfaces for inspection setups. A stepped right-angle granite block, the most common type, is shown in Fig. 3-31. The advantages of using granite as a material for a reference surface are given in par. 3.4.1. Right-angle granite blocks range from 6 in. to 18 in. in height and are accurate within 2 sec of arc in squareness. The larger blocks are manufactured with radial holes that lead to various positions on the bottom of the block from a common inlet hole at the top. Compressed air, which allows easy and accurate movement of the heaviest blocks without any surface wear, is then used to form an air cushion under the block.

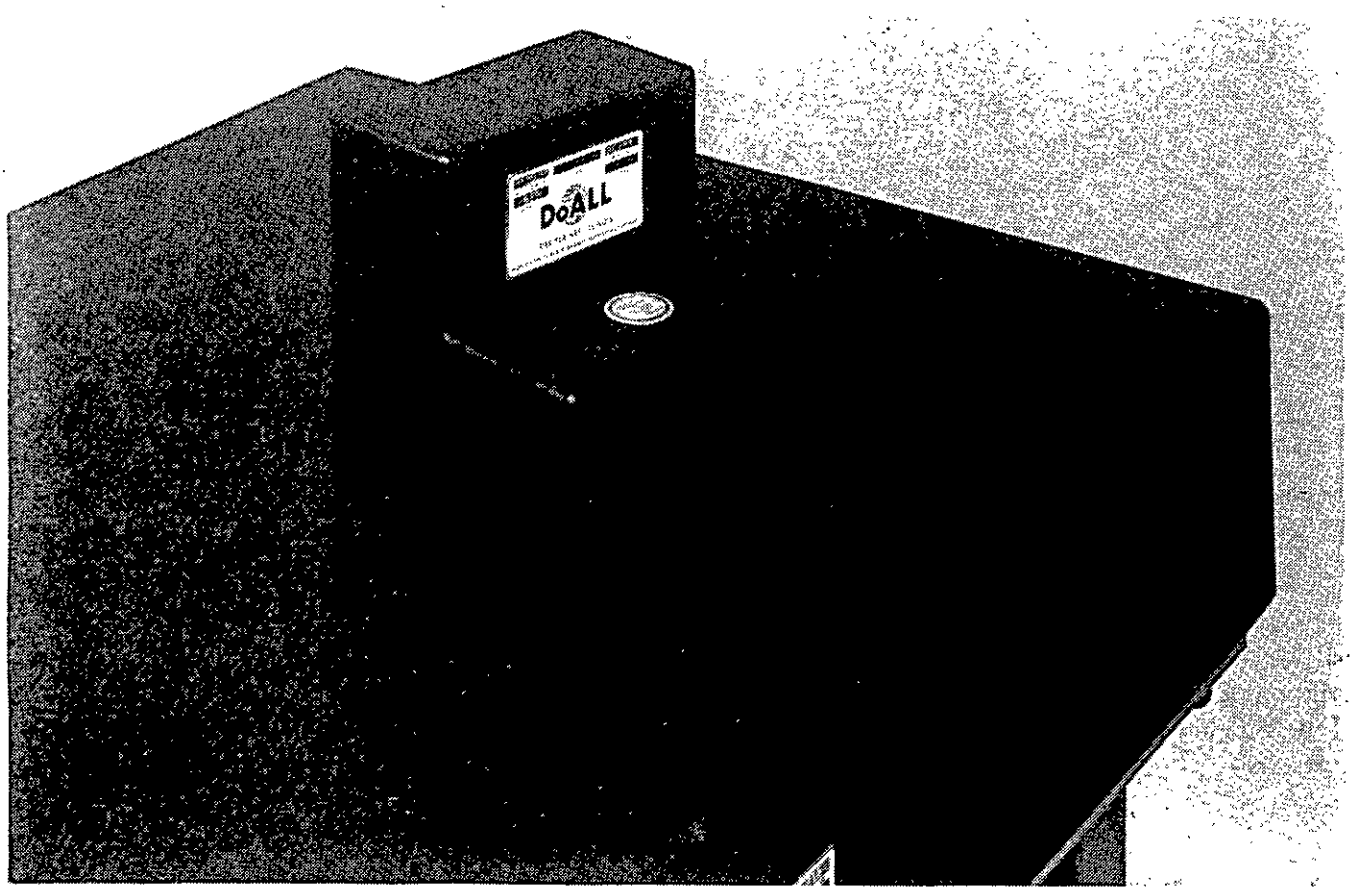

Courtesy of DoALL Company.

Figure 3-31. Granite Square

Two different instruments are classified as cylindrical squares. One is a very precise right circular cylinder, shown in Fig. 3-32, that is used as a reference for setting a dial indicator mounted on a special stand. The stand is unique in that the front of its base is curved to insure a point contact with the lower portion of the cylinder. After the dial indicator is adjusted to the desired height, the instrument is set to zero when the indicator and

Downloaded from http://www.everyspec.com

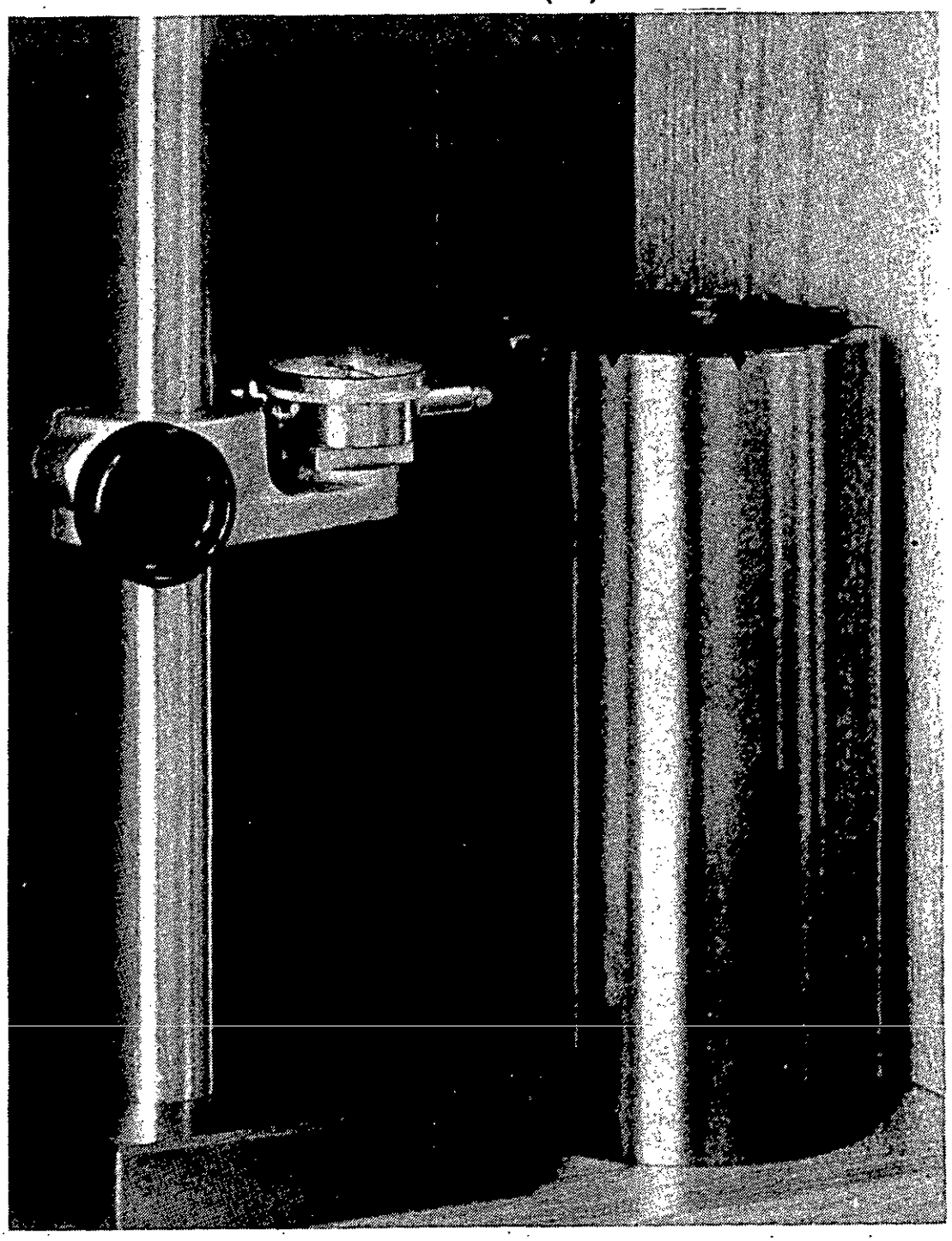

Courtesy of Taft-Peirce Manufacturing Company, Cumberland, RI.

Figure 3-32. Cylindrical Steel Square

Downloaded from http://www.everyspec.com

base are in simultaneous contact with the cylinder. With this setup the deviation from the perpendicular plane of the two selected points can be checked. The cylinders are made of alloy steel and are accurate within 2 sec of arc. The most common size is 5 in. in diameter and 12 in. high.

Direct-reading cylindrical squares are used to measure perpendicularity directly. One such instrument—a very precise circular cylinder whose base is not perpendicular to the axis of the cylinder—is shown in Fig. 3-33. The shape of the base is, therefore, elliptical rather than circular. When resting on this elliptical base, the angle that a plane tangent to the surface of the cylinder makes with a line perpendicular to the base and intersecting the line of tangency of the plane and the cylinder depends upon the orientation of the cylinder. For example, the plane tangent at the point of intersection of the minor axis of the ellipse will be parallel to the line, and the maximum deviation will occur when the plane is tangent at the point of intersection of the major axis. Thus when the cylinder is rotated past a vertical or near-vertical surface, the points of contact will form a curve on the cylinder. These are the graduated lines scribed on the cylinder and shown in Fig. 3-33.

In actual use the cylinder is rotated in contact with the surface being inspected until the least light gap is reached. The perpendicularity can then be read directly from the curve where the contact is made. Accuracies of 0.0002 in. over a length of 6 in. are possible with these instruments.

3.4.8 STRAIGHTEDGES

Straightedges are used for checking the straightness of a surface or the alignment of distinct points. Straightedges are made of hardened steel and manufactured in sizes ranging from 12 in. to 6 ft in length. A set of steel straightedges is shown in Fig. 3-34. The edges are semicircular in cross section to form a line contact with the piece to be inspected. Accuracies of 0.00012 in. per ft are common.

A variation of the steel straightedge is known as the leveling straightedge. It is made of cast iron and contains a spirit level. Although it is much more accurate, the leveling straightedge is comparable to the common mason's level in appearance and function. The leveling straightedge is particularly useful for leveling and setting up machinery and fixtures.

The straightness of a surface is checked by sighting between the instrument blade and the product in the manner discussed in par. 3.4.7 for inspecting perpendicularity. Because deflection of long straightedges can also introduce errors, these instruments should be supported laterally, if possible.

3.4.9 SINE BARS

Sine bars are instruments used to measure or set acute angles. The trigonometric principle employed is that the ratio of the length of a side to the length of the hypotenuse of a right triangle is the sine of the angle opposite the side. A sine bar consists of three precision parts—a bar of known length and two cylinders of equal diameter. In operation, the bar forms the hypotenuse of the triangle, and a surface plate constitutes the side adjacent to the angle to be measured. The length of the third side, which determines the sine of the angle, is measured or set—usually with gage blocks.

A sine bar is shown in Fig. 3-35. As illustrated by the figure, the diameters of the cylinders are relatively immaterial provided they are the same. The diameters must, however, be large enough to contact the surface plate and be small enough to contact the bar properly.

Sine bars are available in a variety of shapes, widths, and thicknesses and with base attachments for special applications. Bar lengths are fairly standard at 5 in. or 10 in. If the accuracy of the instrument (usually gage blocks) used to measure the opposite side is equal to or better than the accuracy of the center-to-center distance between the cylinders (usually 0.0002 in.), accuracies of 5 to 10 sec are possible with sine bars.

3.4.10 PLANER GAGES

A planer gage is a very versatile surface plate accessory that can be used either as a transferring device or as an adjustable reference surface. It operates on the same geometric principle as tapered parallels do. As Fig. 3-36 shows, the main member is a 30-60-90-deg triangle that can rest on either side. The adjustable component slides along the hypotenuse and can be clamped at any location. This mechanism provides a very quick and convenient means of securing a dimension or a height above a surface plate. Fig. 3-37 shows a planer gage

Downloaded from http://www.everyspec.com

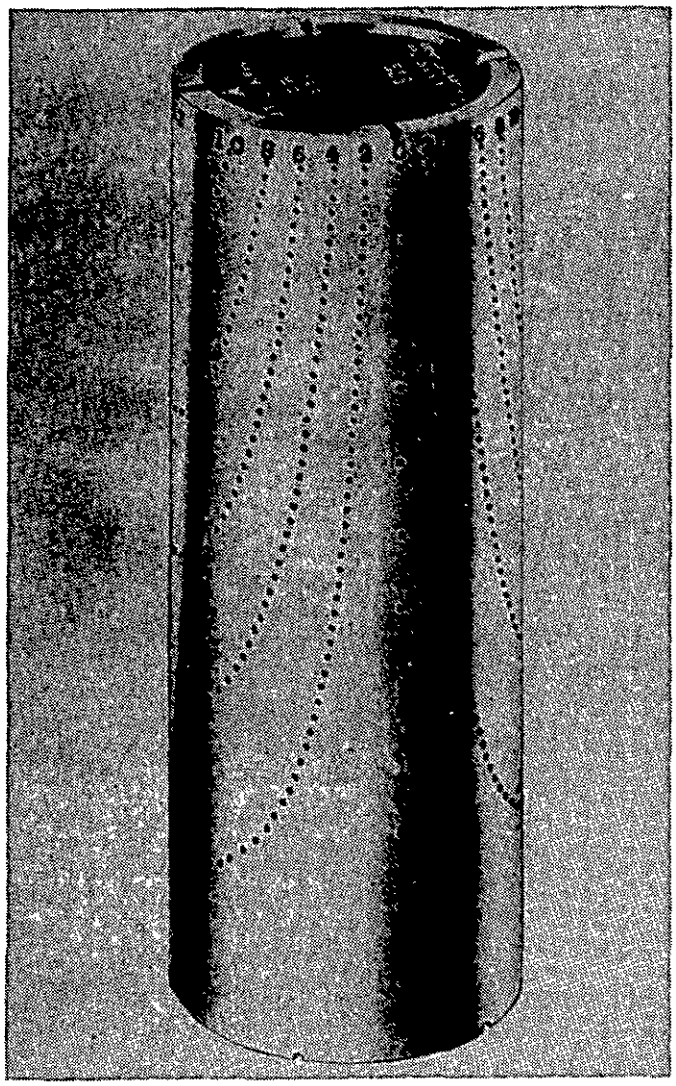

Courtesy of Brown & Sharpe Manufacturing Company, North Kingstown, RI.

Figure 3-33. Direct Reading Cylindrical Square

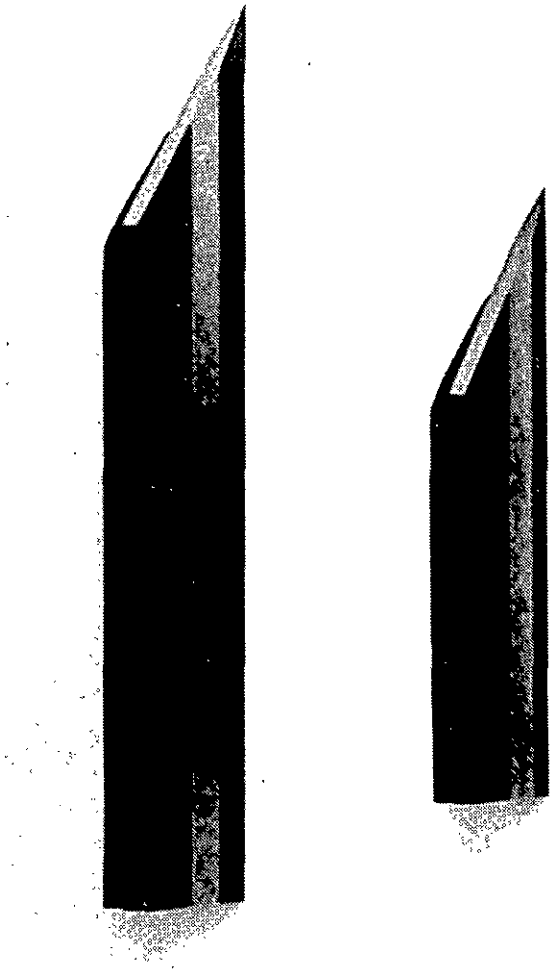

Compliments of MITUTOYO/MTI Corporation.

Figure 3-34. Steel Straightedges

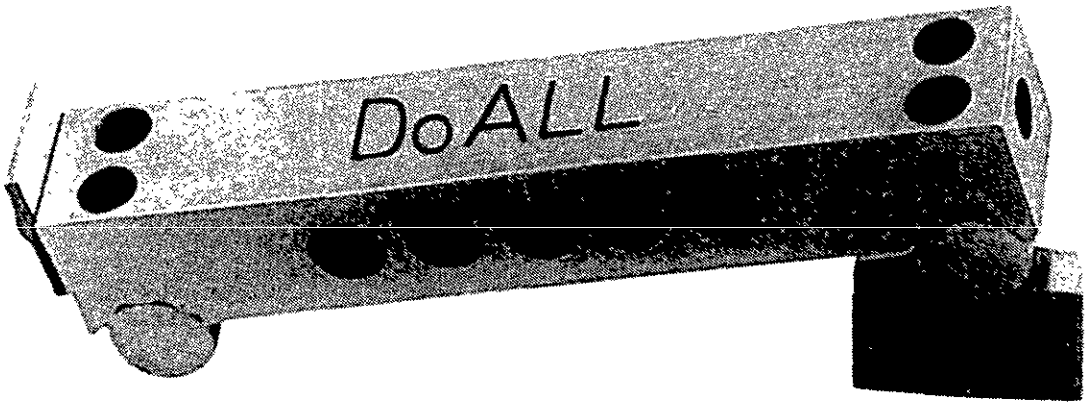

Courtesy of DoALL Company.

Figure 3-35. Sine Bar

Downloaded from http://www.everyspec.com

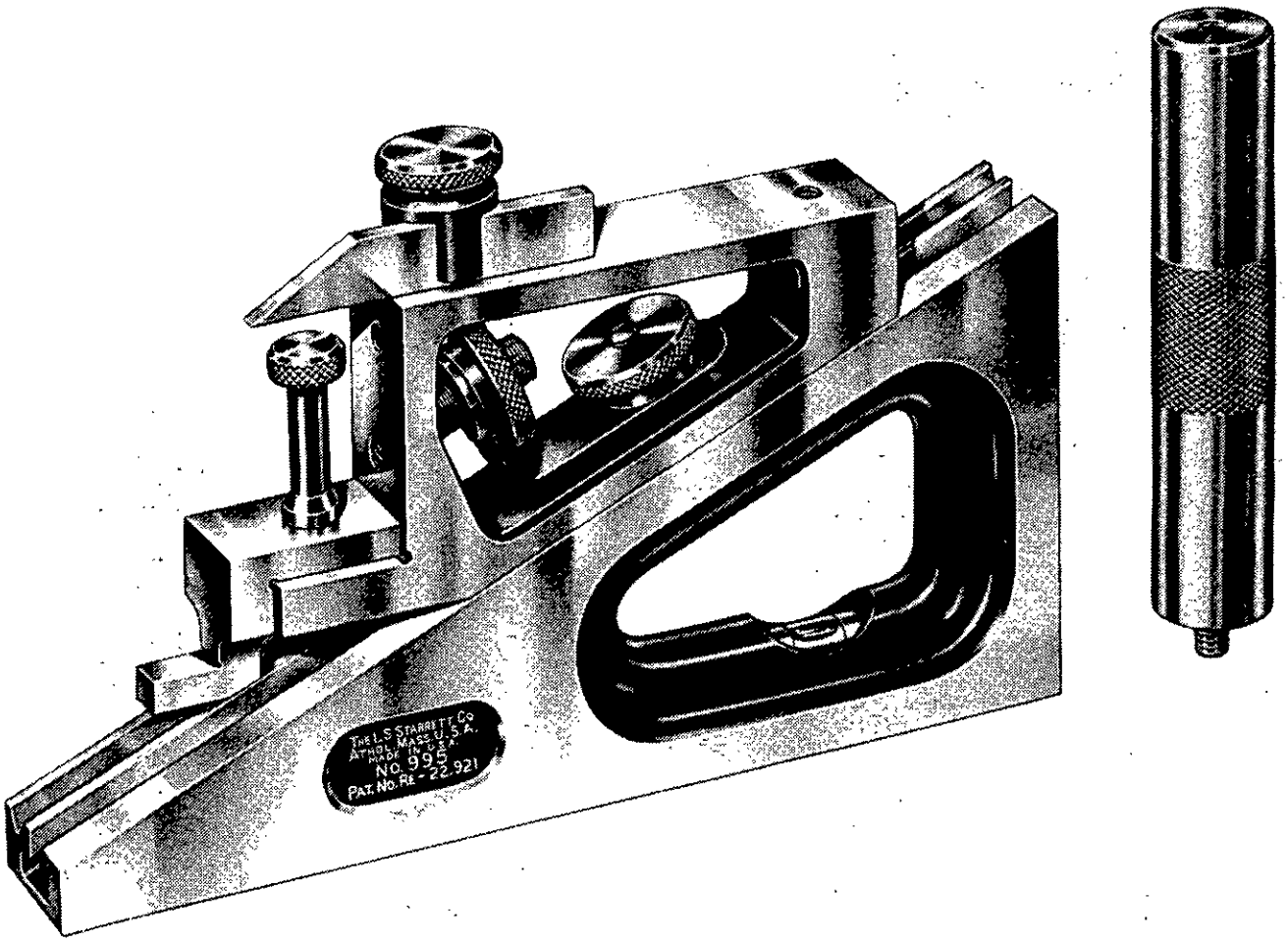

Courtesy of The L. S. Starrett Company, Athol, MA.

Figure 3-36. Planer Gage

Downloaded from http://www.everyspec.com

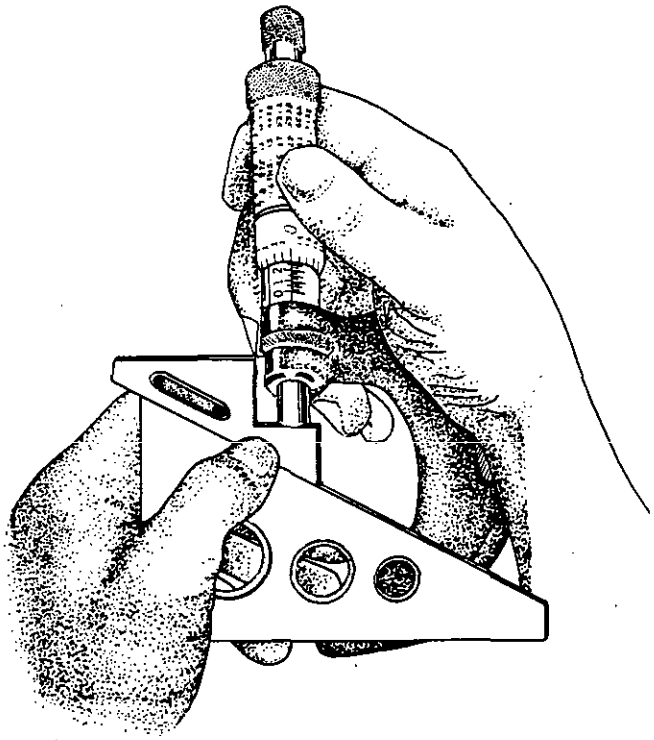

Figure 3-37. Planer Gage Used as a Transferring Device

being used as a transferring device. Planer gages can secure dimensions between approximately 0.25 and 7 in., although the upper limit can be extended 3 in. by an extension that screws into the sliding component.

3.4.11 DIAL INDICATORS

Dial indicators are mechanical instruments for sensing and measuring variations in dimensions. The basic dial indicator is shown in Fig. 3-38. The linear displacement is converted into rotational movement through a rack and pinion. The rotary motion is amplified mechanically by one or more sets of driving gears and then displayed by a pointer that rotates over the face of a graduated dial. Because of the amplification capability, dial indicators are very sensitive, especially when the measuring range is spread over several revolutions of the indicator hand; therefore, very accurate dial indicators have a small measuring range. The most accurate dial indicators can indicate a 0.00005-in. deflection. Other advantages of dial indicators are that they are rugged, compact, economical, and retain their accuracy over a long time period.

It must be remembered that dial indicators generally provide comparative rather than direct measurements, i.e., a dial indicator only records displacement from a reference or datum. The datum must be established and the instrument "zeroed" before any meaningful reading can be obtained.

Dial indicators have two major uses: to assess the deviation of a product dimension from a reference for a number of identical parts and to assess the variation in the surface of an individual part. This latter assessment involves taking readings at a number of points on the product surface. A typical example of this application is the determination of runout discussed in par. 2.2.1.6. Other applications of dial indicators are demonstrated in the examples in par. 3.6.

3.5 COORDINATE MEASURING MACHINES

Coordinate measuring machines (CMMs) locate, measure, and determine the size and shape of product features in two and sometimes three mutually perpendicular planes—i.e., along the *x*-, *y*-, and sometimes *z*-axes. These very accurate machines were developed from precision layout machines to satisfy the need for increased inspection rates and high accuracy. The basic elements of a CMM are a staging table, a movable

Downloaded from http://www.everyspec.com

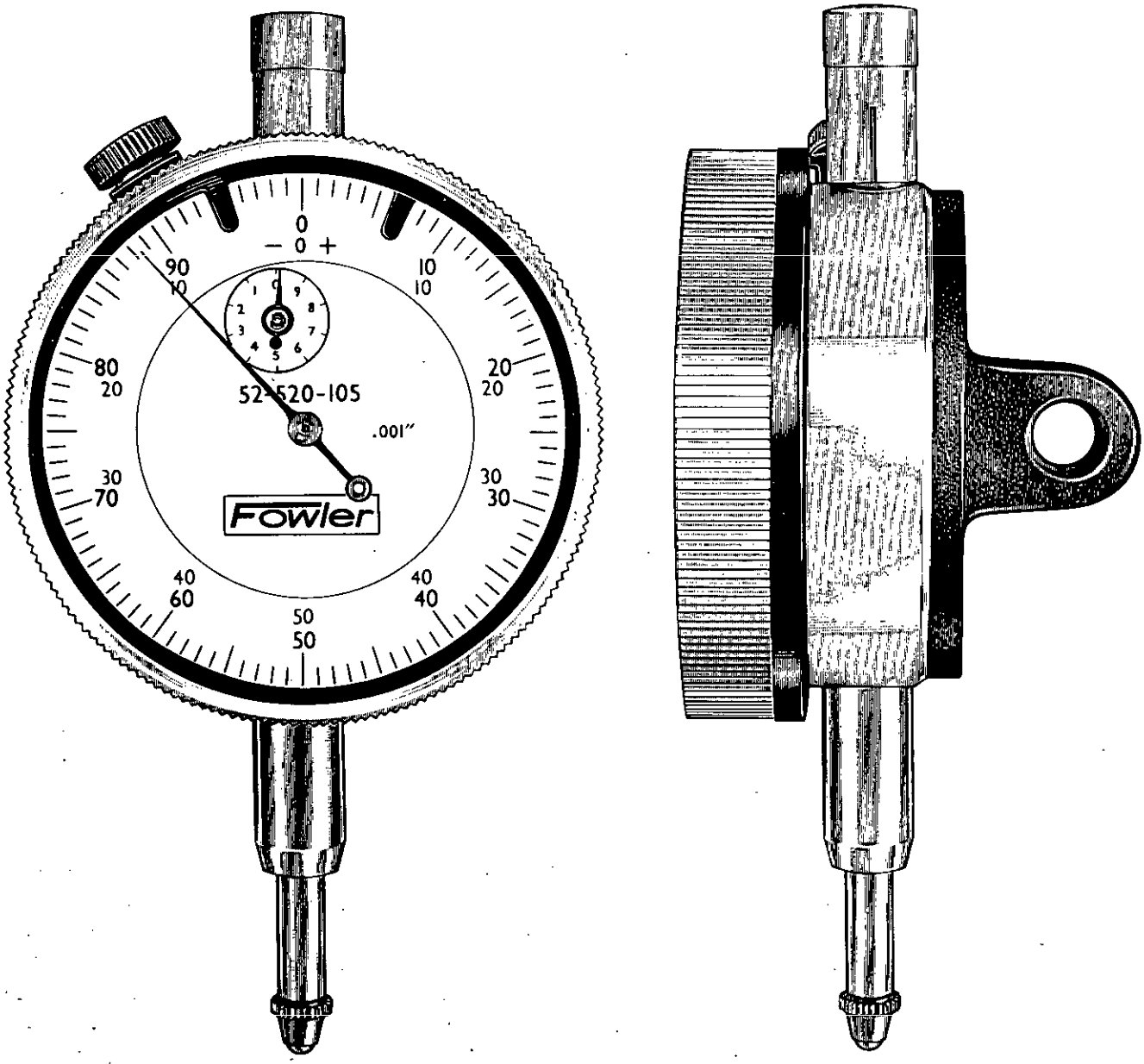

Provided by the Fred V. Fowler Co., Inc., Newton, MA.

Figure 3-38. Dial Indicator

member (the "gage head") that carries a sensing device, and a displacement-measuring device. The movable member operates in guideways that allow smooth and precise travel in the axial directions. In some machines the staging table also is mounted in guideways and is movable in the two horizontal directions, which afford additional flexibility. The product to be inspected is mounted on the staging table, the sensing device is brought into contact with the reference surface, the displacement reading is zeroed, the sensing device is brought into contact with the surface being inspected, and the displacement of the probe is displayed or recorded by a displacement-measuring device. Because CMMs often are manufactured for a specific purpose, the range of maximum dimensions that can be inspected varies from a few inches to 10 ft or more.

CMMs are classified according to the type of displacement-measuring device used. The most common types are dial indicators, optical comparators, electronic measuring devices, combinations of optical and electronic

Downloaded from http://www.everyspec.com

devices, and computer-aided measuring devices. Each of these categories is discussed in a subsequent paragraph.

For complex measurements of a limited number of parts, the general advantages of CMMs compared to other SME are

1. Increased inspection rates
2. Improved accuracy
3. Uniformity of inspection
4. Reduced operator skill requirements and minimization of operator error
5. Reduced inspection fixturing and maintenance costs.

Because CMMs measure displacement along all three axes, the operator must insure that sufficient readings are taken to define the feature being inspected. For example, a minimum of three points is required to define a circle. Thus inspection with a CMM of the diameter of a hole would require at least three "hits" of the sensing device on the surface of the hole. Likewise, there are a minimum number of points required to define completely any other geometric feature. In CMM parlance this is known as the "minimum number of hits" for adequate inspection. The minimum number of hits for some of the more common geometrical shapes is shown in Fig. 3-39. The inspection of form or of more complex features, such as runout, requires additional hits.

Disadvantages of CMMs are that extreme operator care and frequent calibration are required to achieve the stated accuracy. Also inconsistent orientation of the sensing probe through a set of readings can contribute to errors caused by misalignment between the probe and the table, runout in the probe, or perpendicularity errors among the *x*-, *y*-, and *z*-axes.

3.5.1 COORDINATE MEASURING MACHINES EQUIPPED WITH DIAL INDICATORS

This is the most basic CMM and also is known as the mechanical coordinate measuring machine. The *x*-, *y*-, and *z*-coordinates are read directly from three continuous-travel dial indicators. The accuracy of this machine is $\pm$ 0.005 in.

3.5.2 COORDINATE MEASURING MACHINES WITH OPTICAL COMPARATORS

Three types of CMMs are equipped with optical comparators that project a magnified shadow of the part onto a screen. Basic optical comparators are discussed in detail in par. 4.2.1.2. In one type of instrument the comparator is simply an accessory used in conjunction with a mechanical coordinate measuring machine. In another type the part is located with reference to marks on the screen, and point-to-point displacements are then obtained by measuring the movement of the staging table along the two axes. The third type of instrument requires less manual control because displacement is measured directly by an optical sensor that senses light and shadow and also measures the distance between the reference point and the leading and trailing edges of dark and light areas on the screen. CMMs with optical comparators have accuracies to within 0.00005 in.

3.5.3 COORDINATE MEASURING MACHINES EQUIPPED WITH ELECTRONIC MEASUREMENT AND DIGITAL READOUT

These CMMs measure the displacement of the moving head electronically and display it in digital form. Different electronic measurement methods are used. The manufacturer of one such machine claims an accuracy of 50 μin. In addition to being highly accurate, these CMMs allow extremely rapid movement of the gage head.

A variation of the electronic CMM uses the Moire fringe concept, in which photoelectric cells convert information about the movement of the interference pattern of diffraction gratings into electrical signals. The output of any of these instruments can be converted readily to a continuous digital readout. Digital readout has the obvious advantage of reducing both inspection time and the need for interpretation of results by the operator.

3.5.4 COORDINATE MEASURING MACHINES WITH AUTOMATIC PRINTOUT

Most CMMs can be equipped with a printer that produces a permanent record of inspection activities. Again, the advantage is that operator involvement and inspection time are decreased. The permanent record

Downloaded from http://www.everyspec.com

	Feature	Minimum Number of Hits
	Point	1
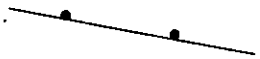	Line	2
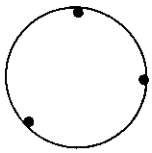	Circle	3
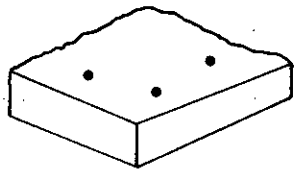	Plane	3
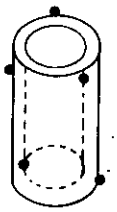	Cylinder	5
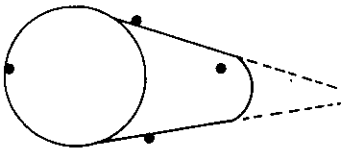 (2 points hidden from view)	Cone or Taper	6
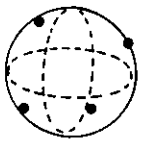	Sphere	4

Figure 3-39. Minimum Number of Hits for CMM Inspection

Downloaded from http://www.everyspec.com

serves many purposes, including verification that the inspection was conducted and also its results. In addition, if problems arise concerning the fit or function of the product, the record may serve an important diagnostic purpose.

3.5.5 COORDINATE MEASURING MACHINES WITH COMPUTERS

The addition of a computer to a CMM, as shown in Fig. 3-40, enhances considerably the capabilities of this already versatile machine. Some of the additional capabilities offered by the computer are

1. Comparison of actual with specified dimensions and the recording of deviations
2. Ability to specify different output modes, such as paper, punched tape, or visual display on terminal
3. Conversion between cartesian and polar coordinates
4. Automatic calculation and processing of dimensions from the coordinates registered by the probe
5. Generation of a numerical control tape that can be used to produce duplicate products
6. Compensation for misalignment of the probe.

In addition to computational assistance, computers often are used to control CMMs directly. Computer control improves accuracy, reproducibility, and productivity because, as a general rule, computer-controlled CMMs are three to four times faster than are manual operations.

3.5.6 UNIVERSAL MEASURING MACHINES

These machines are known as universal measuring machines because in addition to coordinate measurements they can check product contours, tapers, radii, roundness, and squareness. The staging tables traverse along x- and y-axes and rotate about at least one axis. Because of their extremely rigid construction and precise product positioning capability, universal measuring machines are the most accurate and reliable of the CMMs. The precise product positioning capability is combined with an excellent tracking system to allow these machines to measure linear as well as angular displacements very accurately. A universal measuring machine is shown in Fig. 3-41.

Two types of universal measuring machines are commonly in use. The first type uses an optical magnifying device that is sometimes complemented by an electronic microindicator for accurately reading the scales. Output signals from the microindicator can be indicated or recorded on charts. The second system uses a precision leadscrew with a large graduated drum and vernier to make highly accurate measurements.

Machines equipped with either type of measuring device can measure accurately within 0.000035 in. along either axis and have a spindle rotation accuracy of 0.000005 in. total indicator reading.

3.6 OPEN SETUPS

The term "open setup" refers to an arrangement of SME used to verify the conformance of the geometric characteristics of a product to the specified values. "Open setup" commonly is used to connote inspection by variables as opposed to inspection by attributes (gaging). The term usually refers to a collection of equipment assembled for one inspection rather than to a single unit, such as a CMM.

To inspect a product properly, the inspector must have access to a product drawing with complete and unambiguous specifications. The accuracy and repeatability of the measurements then depend mainly upon the accuracy of the inspection equipment and adherence to proper procedures in setting up the product and the inspection equipment. Following is a step-by-step procedure for open setup inspections:

1. Identify the primary, secondary, and tertiary datums on the product drawing.
2. Identify the primary reference plane of the inspection equipment to be used—either a surface plate or the table of a coordinate measuring machine.
3. To the extent possible, collocate the primary datum of the product and the primary reference plane of the equipment.
4. Identify the secondary and tertiary reference planes of the inspection equipment. (These are usually surface plate accessories such as angle blocks, but sometimes the primary reference plane serves as a secondary or tertiary plane by rotating the product to bring other product datums into contact with the primary reference plane.)

Downloaded from http://www.everyspec.com

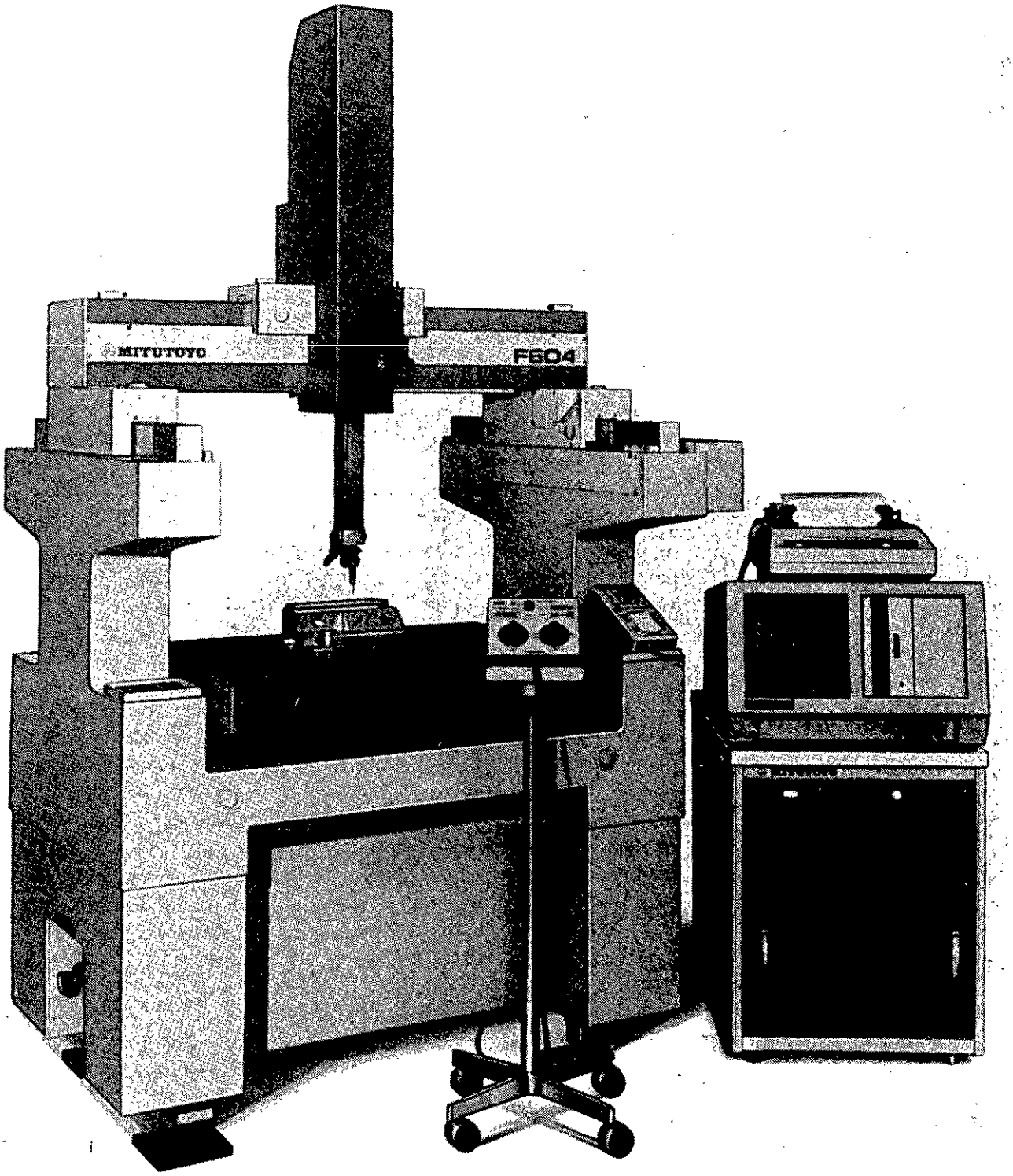

Compliments of MITUTOYO/MTI Corporation.

Figure 3-40. Coordinate Measuring Machine With Computer

Downloaded from http://www.everyspec.com

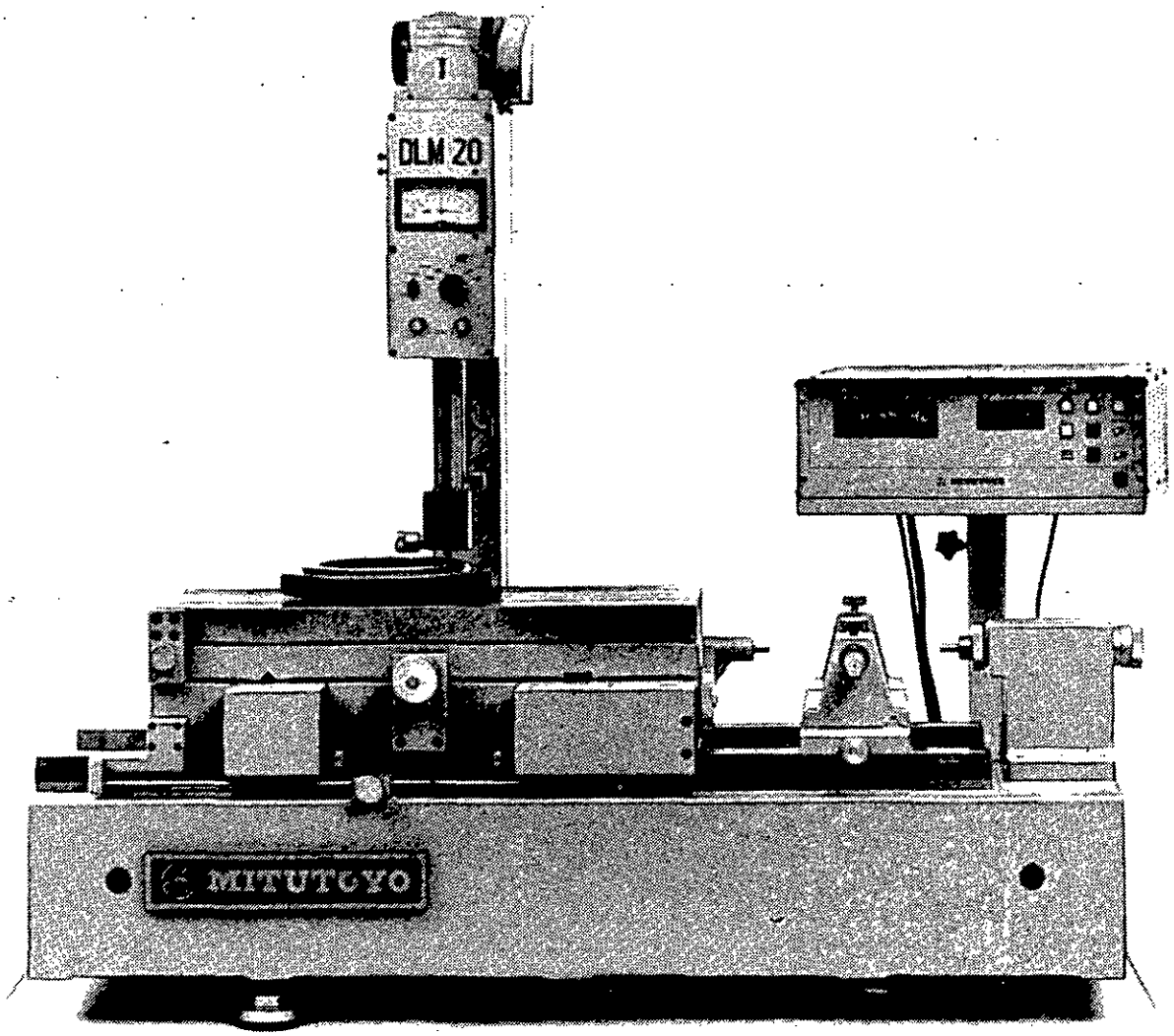

Compliments of MITUTOYO/MTI Corporation.

Figure 3-41. Universal Measuring Machine

5. If the product drawing indicates datum targets, locate the product with point, rather than line or surface, contacts. For stability the primary datum must be contacted by at least three points, i.e., the secondary datum by two points and the tertiary datum by one point. Point contacts are usually provided by staging buttons. These buttons have either flat or spherical heads that establish datum planes by contacting the product datum feature at the datum targets. Because the buttons have a small contact area, it is not necessary to finish the entire surface of the product datum feature.

6. Conduct the inspection and make sure that the angularity of the axis of a feature within the allowable tolerance zone is considered.

7. Depending upon the required accuracy, correct the measurements for errors caused by temperature variations.

8. Consider the significance of errors resulting from clamping the product, inaccuracies in the inspection equipment, and operator error. (Clamping errors can be reduced by applying the minimum force necessary to secure the product. Calibration can compensate for some inspection equipment inaccuracies. Under no circumstances, however, can a single measurement be more accurate than the least accurate piece of inspection

Downloaded from http://www.everyspec.com

equipment used. Rarely can anything be done regarding operator error, but its existence should always be acknowledged.)

Examples of applications of SME in open setups to inspect several requirements follow.

3.6.1 PARALLELISM

See Fig. 3-42.

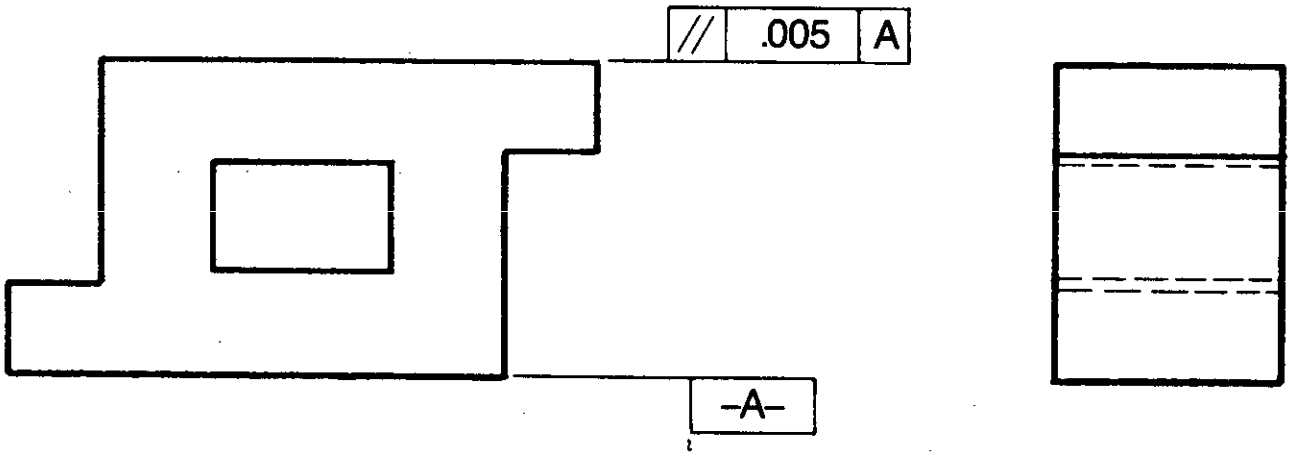

(A) Product

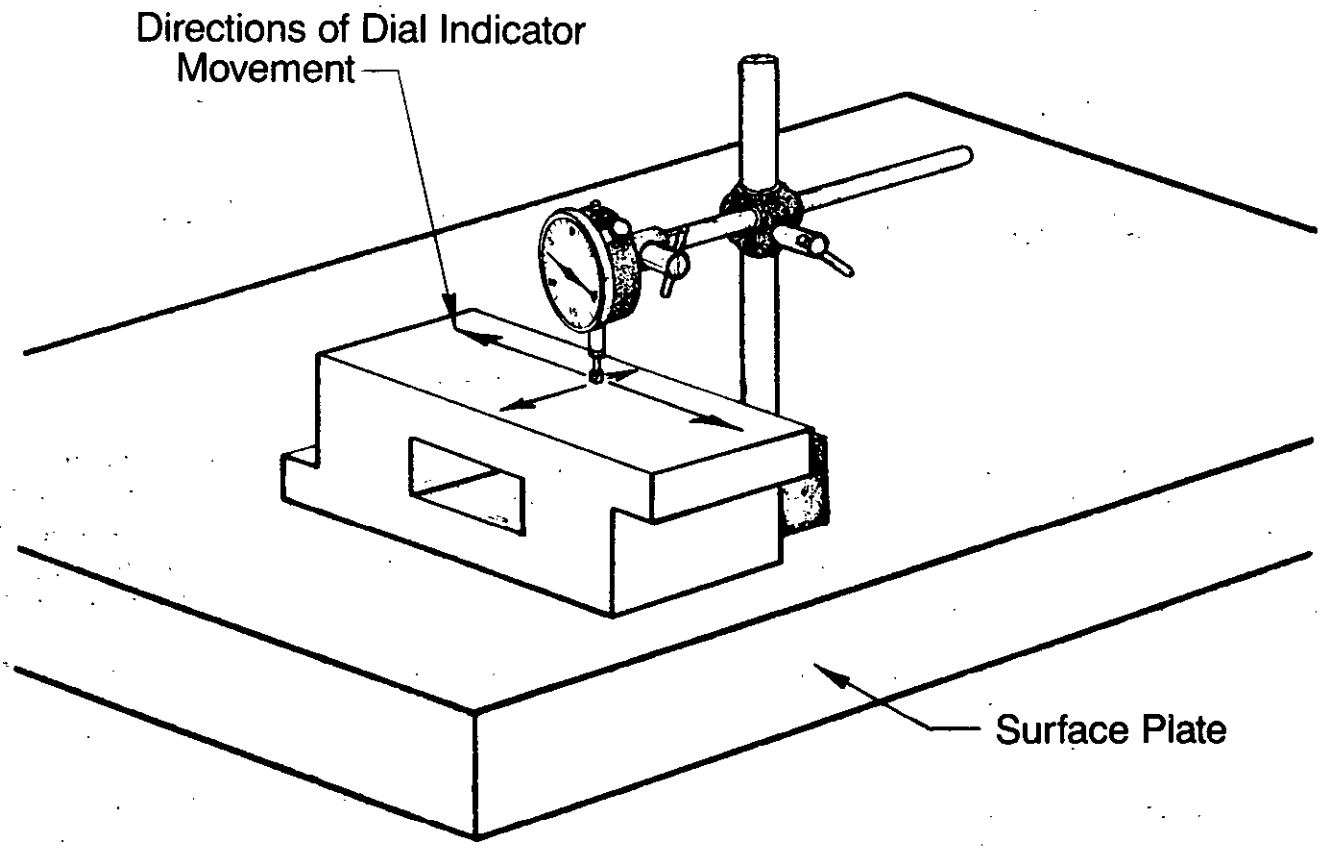

(B) Inspection Setup

Figure 3-42. Open Setup for Inspecting Parallelism

Downloaded from http://www.everyspec.com

3.6.2 PERPENDICULARITY

See Fig. 3-43.

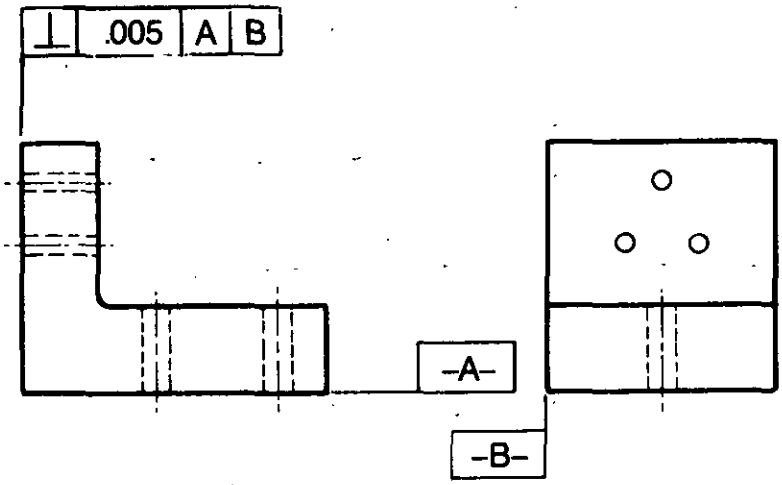

(A) Product

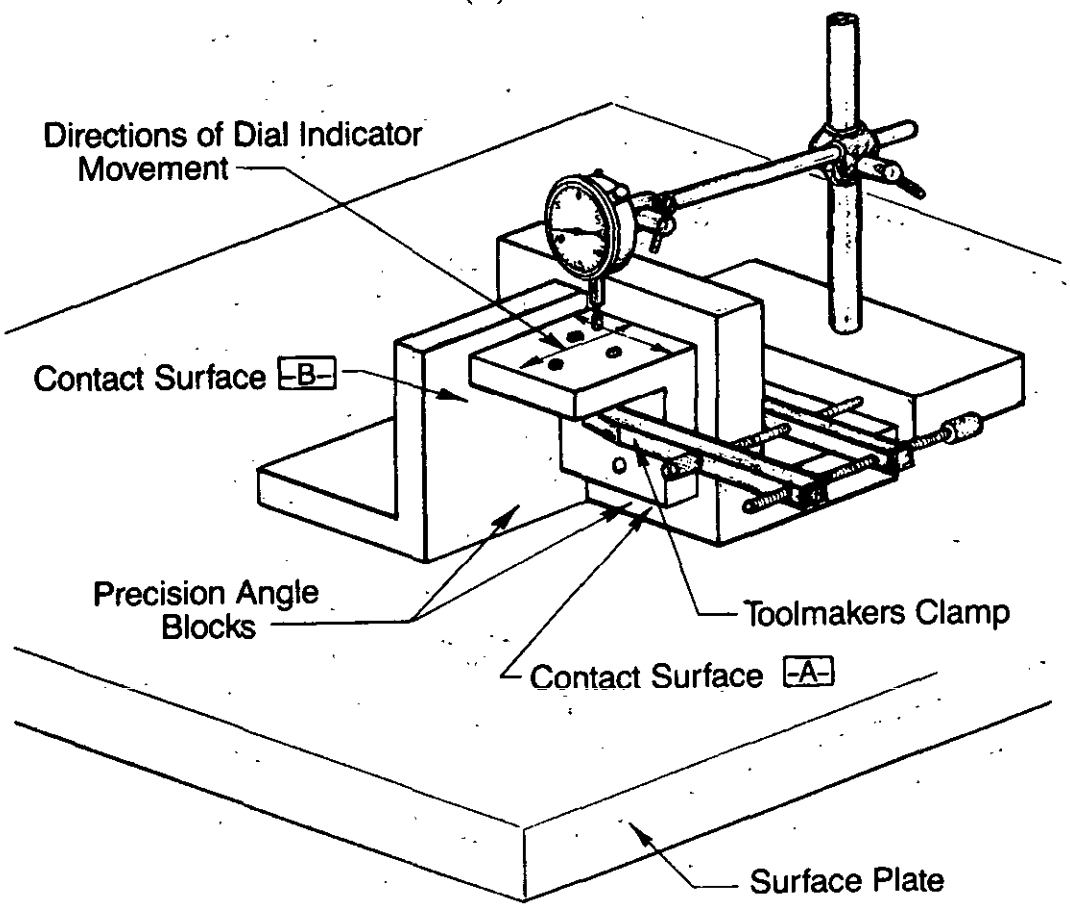

(B) Inspection Setup

Figure 3-43. Open Setup for Inspecting Perpendicularity

Downloaded from http://www.everyspec.com

3.6.3 RUNOUT

See Fig. 3-44.

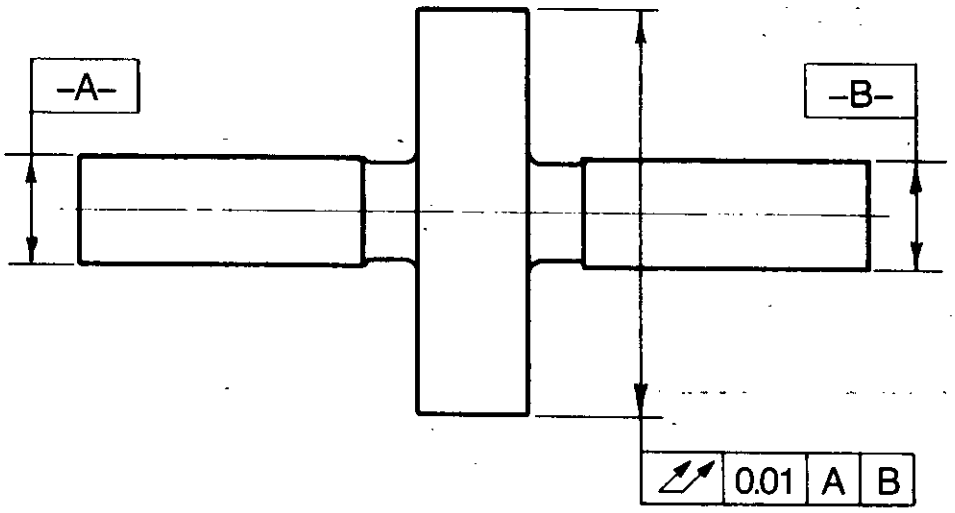

(A) Product

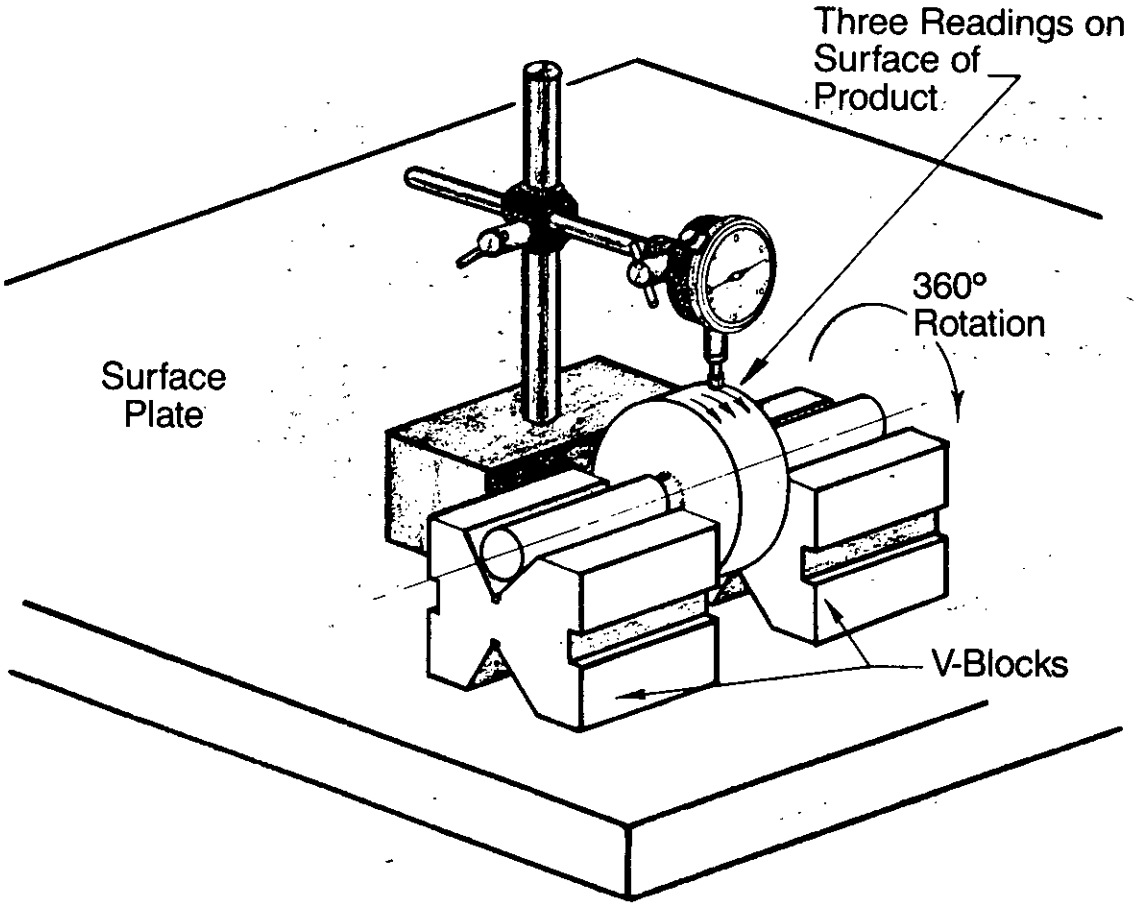

(B) Inspection Setup

Figure 3-44. Open Setup for Inspecting Total Runout

Downloaded from http://www.everyspec.com

3.6.4 TRUE POSITION

See Fig. 3-45.

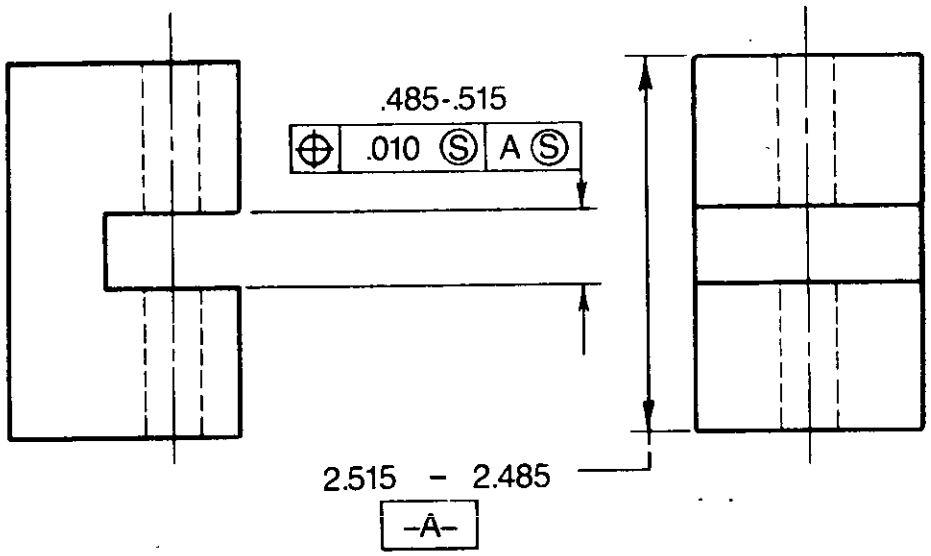

(A) Product

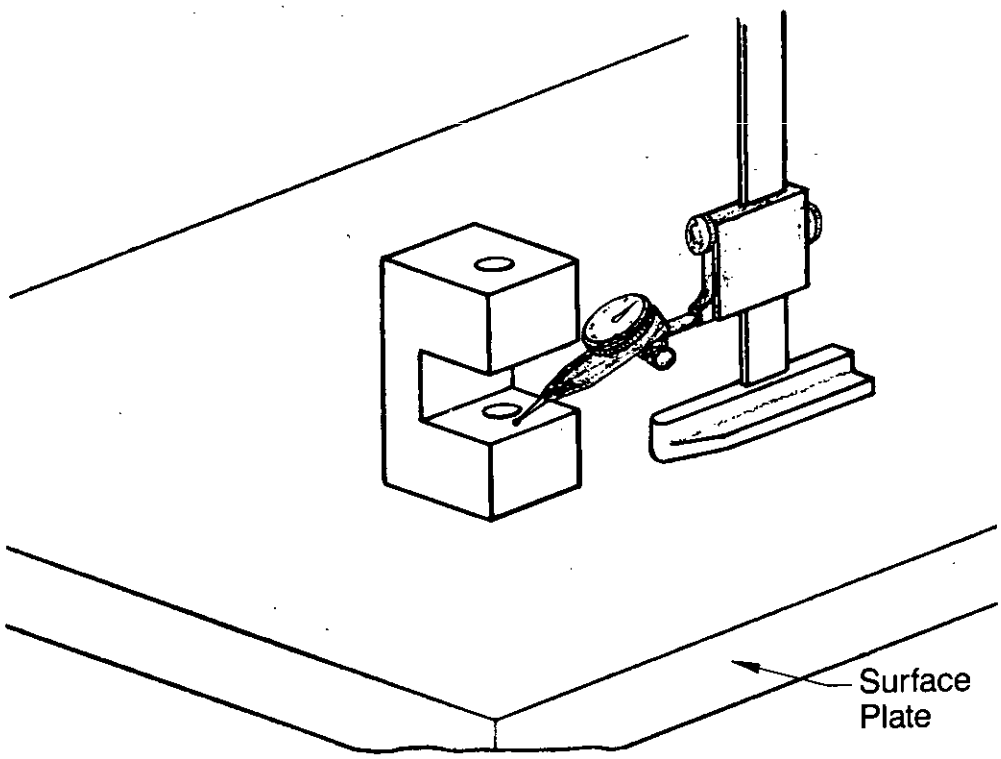

(B) Inspection Setup

Figure 3-45. Open Setup for Inspecting True Position

Downloaded from http://www.everyspec.com

3.6.5 LOCATION

See Fig. 3-46. Inspection for the location of the pins in Fig. 3-46 with an open setup is performed as a regardless of feature size (RFS) requirement even though the drawing specifies maximum material condition

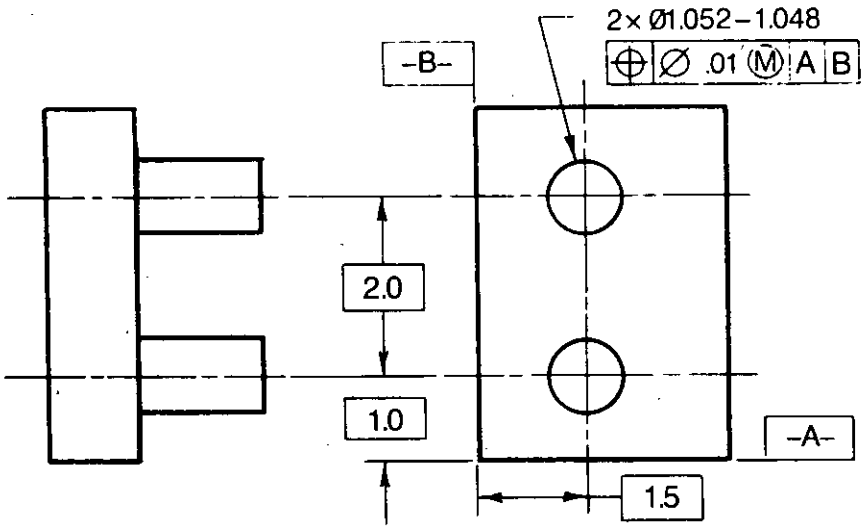

(A) Product

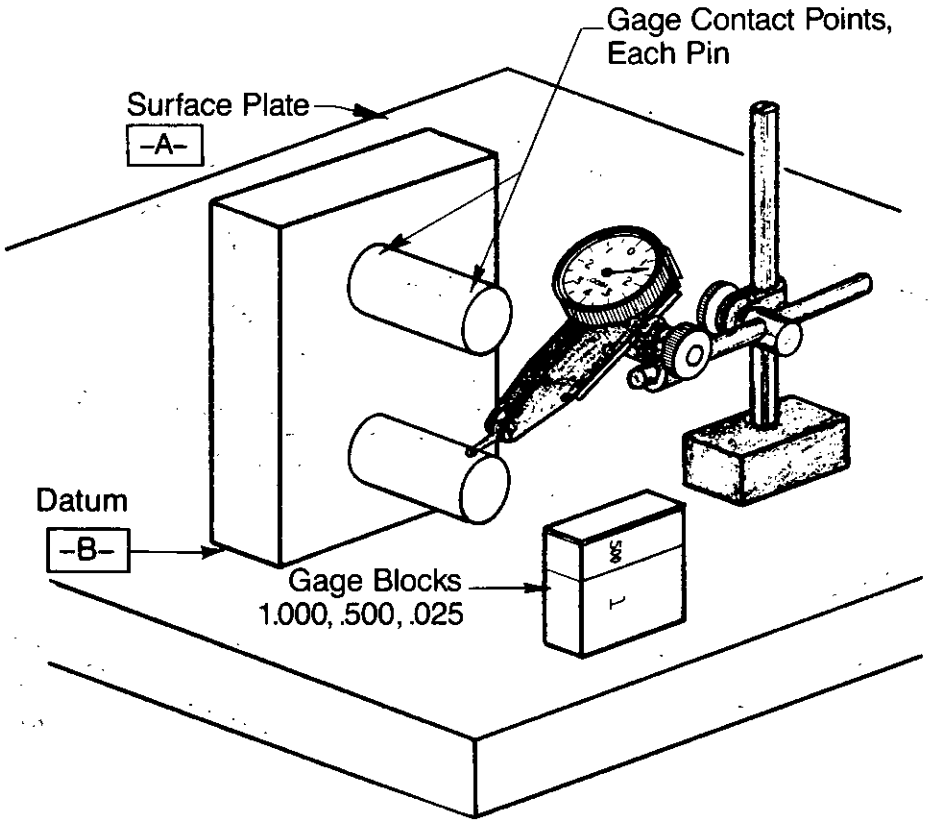

(B) Inspection Setup

Figure 3-46. Open Setup for Inspecting Location

Downloaded from http://www.everyspec.com

(MMC). The following step-by-step procedure must be followed in conducting the inspection (Step 6, par. 3.6):

1. Measure and record the diameter of each pin.

2. By using a surface plate, dial indicator, and a height reference, such as gage blocks or a height master, measure and record the distance to the top of one pin. Subtract one half of the pin diameter from the distance to calculate the distance to the center of the pin. If the pin diameter is at MMC and the distance to the pin exceeds minimum or maximum limits, reject the product.

3. If the pin is at the least material condition (LMC), the pin location dimensions can include the difference between MMC and LMC. If the position is acceptable, proceed to the next pin. [Note: Although the use of pin size deviations from MMC will produce the same results that would be obtained with a true position gage (See par. 7.7.), a true position gage is strongly preferred to an open setup.]

4. If the first pin is located properly, repeat the procedure three more times, i.e., two inspections from the -A- surface and two inspections from the -B- surface.

5. A minimum dimension from the bottom must combine with a mean dimension from the side to be acceptable. Many of the dimensional combinations of side and bottom lengths will have to be calculated to determine whether they fall in the acceptable zone. (See Fig. 3-47.) Fig. 3-46 serves to illustrate how complicated an error-prone setup inspection can be for some dimensions.

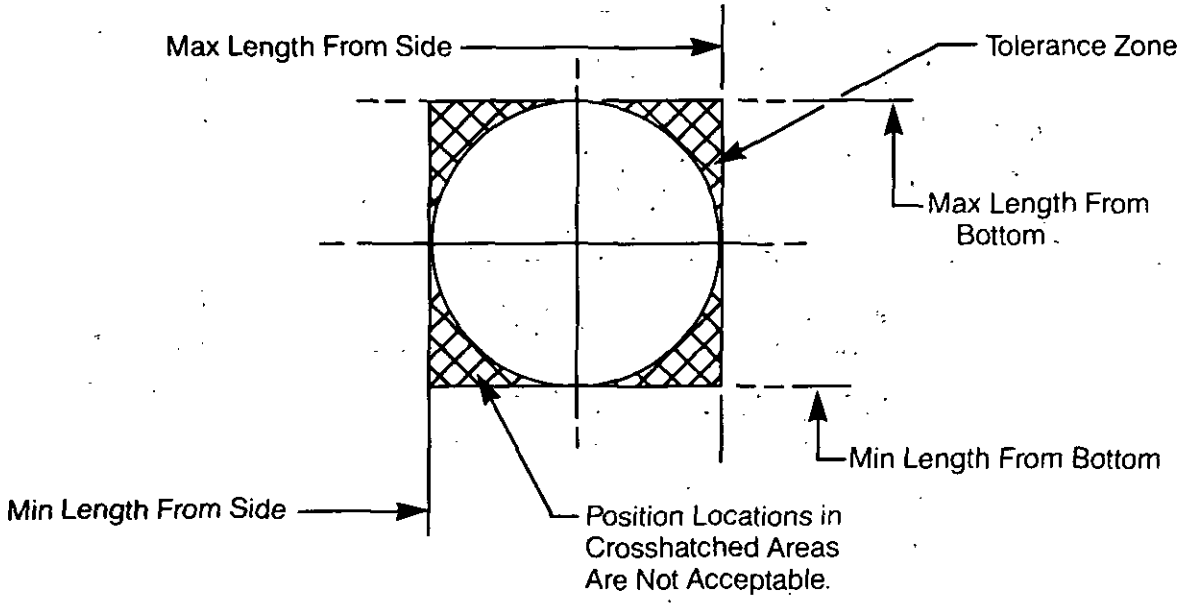

Figure 3-47. Tolerance Zones

3.6.6 USE OF WIRES IN MEASURING PITCH DIAMETER OF SCREW THREADS

See Fig. 3-48. Appendix A4 of Federal Standard H28, *Screw Thread Standards for Federal Services*, (Ref. 4) covers methods of wire measurements of pitch diameter of 60-deg threads. This appendix contains tables that present wire diameters and recommended measuring forces to be used in measuring USA Standard 60-deg threads and taper threads.

Downloaded from http://www.everyspec.com

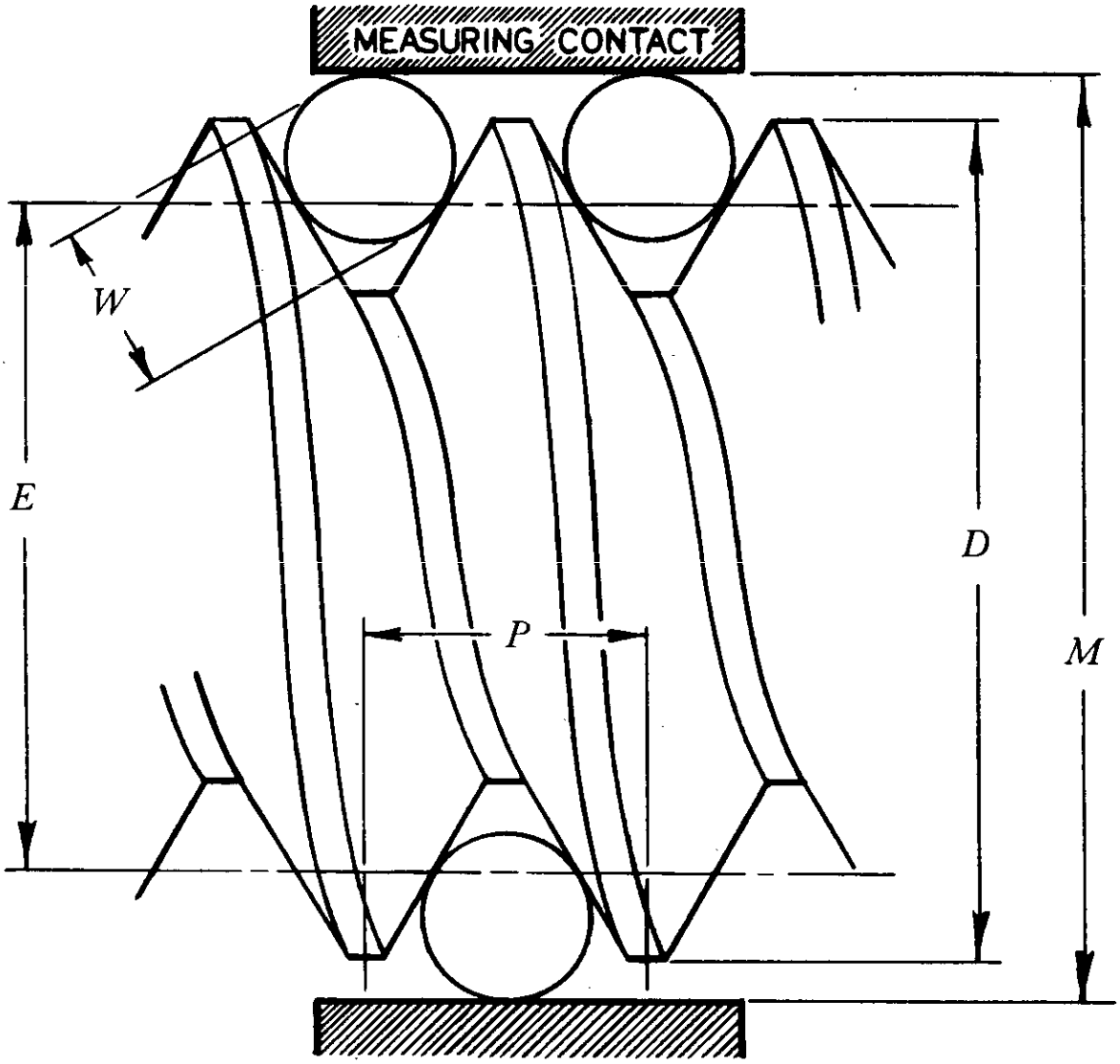

E = pitch diameter
M = measurement over wire
D = major diameter
P = thread pitch
W = wire diameter

Figure 3-48. Three-Wire Method for Checking Screw Thread Pitch Diameter

Downloaded from http://www.everyspec.com

REFERENCES

1. Federal Specification GGG-P-463C, *Plate, Surface (Granite) (Inch and Metric)*, 15 June 1977.
2. Federal Specification GGG-G-15C, *Gage Blocks and Accessories (Inch and Metric)*, 20 March 1975 with Amendment 1, 16 August 1976.
3. Federal Specification GGG-S-656C, *Squares, Carpenters', Diemakers', and Machinists'*, 5 February 1973.
4. Federal Standard FED-STD-H28, *Screw Thread Standards for Federal Services*, 31 March 1978.

BIBLIOGRAPHY

C. W. Kennedy and D. E. Andrews, *Inspection and Gaging*, Fifth Edition, Industrial Press, Inc., New York, NY, 1977.

E. Oberg, F. D. Jones, H. L. Horton, and P. B. Schubert, Eds., *Machinery's Handbook*, 21st Edition, Industrial Press, Inc., New York, NY, 1980.

L. C. Michelon, *Industrial Inspection Methods*, Harper and Brothers Publishers, New York, NY, 1950.

F. T. Farago, *Handbook of Dimensional Measurement*, Industrial Press, Inc., New York, NY, 1968.

E. S. Roth, Ed., *Gaging: Practical Design and Application*, Society of Manufacturing Engineers, Dearborn, MI, 1981.

Precision Measurement in the Metalworking Industry, Department of Education of International Business Machines Corporation, Syracuse, NY, 1978.

J. W. Greve and F. W. Wilson, Eds., *Handbook of Industrial Metrology*, Publication Committee, American Society of Tool and Manufacturing Engineers, Prentice-Hall, Inc., Englewood Cliffs, NJ, 1967.

H. C. Town and H. Moore, *Inspection Machines, Measuring Systems and Instruments*, B. T. Batsford Ltd., London, England, 1978.

ANSI Y14.5-1973, *Dimensioning and Tolerancing*, American Society of Manufacturing Engineers, New York, NY, 1973.

Downloaded from http://www.everyspec.com

CHAPTER 4
OTHER MEASURING EQUIPMENT

This chapter describes equipment for making dimensional measurements through noncontact or other nondestructive techniques. For each type of instrument, a brief description and illustration is provided, and principles of operation, applications (including advantages and disadvantages), accuracy, and sources of error are discussed where appropriate.

4.0 LIST OF SYMBOLS

D = displacement, in.
d = diameter, in.
d_m = measured dimension, in.
E_m = error in measured part dimension, in.
E_α = error due to tilt angle α, in.
f = focal length of objective lens, in.
V_b = speed of measurement beam, in./s
V_{tp} = transverse speed of measured part, in./s
α = tilt angle, sec
θ = angle of displacement, deg
λ = wavelength, μm

4.1 INTRODUCTION

Optical and other noncontact or nondestructive measuring techniques have been developed because there are applications that require measurements of very small and very large dimensions, inaccessible parts of products, and delicate or deformable products. The uses of devices employing these techniques are indicated for the following types of measurements:

1. Measurement of very small dimensions
2. Measurement of very large dimensions, especially where straight lines, flat planes, parallelism, etc., must be maintained to a high degree of precision
3. Measurements of products, parts of which are inaccessible, e.g., wall thickness of closed tanks
4. Measurements of soft or delicate products that would be damaged or deformed if measured by contact methods, e.g., thickness of freshly applied coatings
5. Measurements of products for which it is desirable to maximize manufacturing tolerance (No gage wear tolerance is needed.)
6. Measurements that cannot be made by other means
7. Measurements of products on a manufacturing line where a high production rate must be maintained.

Most optical instruments use the principles of geometric optics in which beams of light are refracted or reflected by lenses and mirrors, respectively, are mechanically aimed, and are focused on a receptor such as an observer's eye, a viewing screen, or an electronic detector. Classifications of optical equipment addressed in this chapter include optical inspection instruments, manual alignment instruments, automatic and photoelectric alignment instruments, interferometric metrology instruments, and electro-optical instruments.

Other categories of noncontact or nondestructive techniques included in this chapter are pneumatic measuring equipment and indirect measuring equipment.

4.2 OPTICAL EQUIPMENT

Light is a versatile and precise tool in dimensional inspection because it may be passed through the optical system of a microscope or projector to provide a magnified image of a test object. Parallel, or collimated, rays

Downloaded from http://www.everyspec.com

of light may be used to establish reference lines and planes, and the bands from waves interfering with each other may be used as an ultraprecise measuring tool through interferometry.

Light obeys certain fundamental laws that are employed by the equipment and processes described, i.e.,

1. *Law of Rectilinear Propagation.* In a medium of constant density, light travels in a straight line and at a constant speed.

2. *Law of Refraction.* When passing from a medium of lesser density to one of greater density, light is bent toward the normal. When passing from a medium of greater density to one of lesser density, light is bent away from the normal.

3. *Law of Reflection.* The angle of reflection equals the angle of incidence and lies on the opposite side of the normal. The angle of incidence is the angle formed between the ray striking the surface and the normal.

4.2.1 OPTICAL INSPECTION INSTRUMENTS

4.2.1.1 Toolmaker's Microscope

The toolmaker's microscope shown in Fig. 4-1, is a basic engineering instrument for measuring and inspecting small parts. It consists of a compound microscope mounted on a fixed base on which a stage is also mounted.

The toolmaker's microscope is used to measure profiles; hole locations; angles; and the locations relative to datums of profiles, angles, etc., particularly on thin, flat stock. One of its original applications, for which it is uniquely qualified, is the inspection of screw threads. It is particularly suited for screw thread inspection processes that require linear and angular measurements to a high degree of repeatable accuracy.

The stage is illuminated with adjustable lighting units and can be moved in two mutually perpendicular, horizontal directions by means of micrometer screws. Displacement of the stage can be read to 0.0001 in. on the micrometer drum. The range of the micrometer screws on a medium-sized model is 2 in. longitudinal and 2 in. latitudinal, although measurements in the longitudinal direction can be extended 2 in. by the insertion of a 2-in. gage block (Ref. 1). Angular measurements are made on scales graduated in minutes; this graduation permits accurate estimation in half minutes.

The toolmaker's microscope possesses the following advantages over other types of direct measurement instruments (Refs. 1 and 2):

1. Noncontact measuring
2. Measurement of dimensions that are otherwise inaccessible
3. Compactness and ease of transportation
4. Ease of setup and operation
5. Measurement of linear and angular dimensions
6. Rotation of reticles into place on a turret (Chart gages are not needed as in the use of an optical comparator.)
7. Measurement of objects at high temperatures without the object or the microscope being affected (This may require telescopic extension of the object field as in a telemicroscope.)
8. Simultaneous measurement and inspection
9. Low-power illumination to eliminate possible heat effects on the object
10. Clear image, not a projection on glass
11. Long life and comparatively low cost.

Sources of error in application of the toolmaker's microscope include parallax and, in measuring thick products, aberration or fuzziness because of the depth of the product. Light that is too intense, too close, or at the wrong angle results in a reflection or "halation effect" under which it is difficult to register a hairline on the true edge of the product.

Downloaded from http://www.everyspec.com

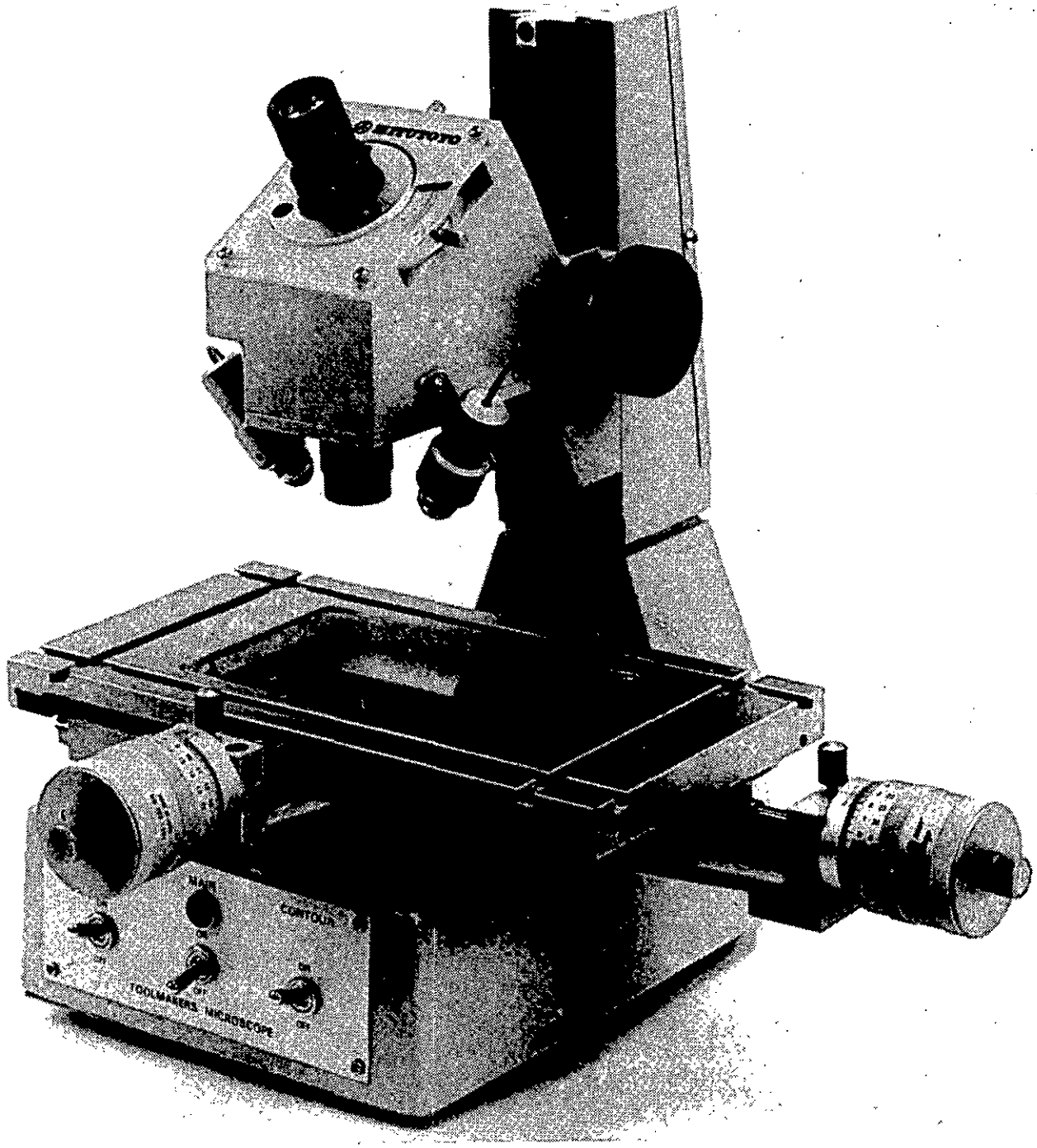

Courtesy of Mitutoyo.

Figure 4-1. Toolmaker's Microscope

Downloaded from http://www.everyspec.com

4.2.1.2 Optical Comparator

The optical comparator, shown in Fig. 4-2, projects the enlarged image of an object on a viewing screen where it is compared to a drawing or master chart. The image is usually a silhouette, but it can be a detailed

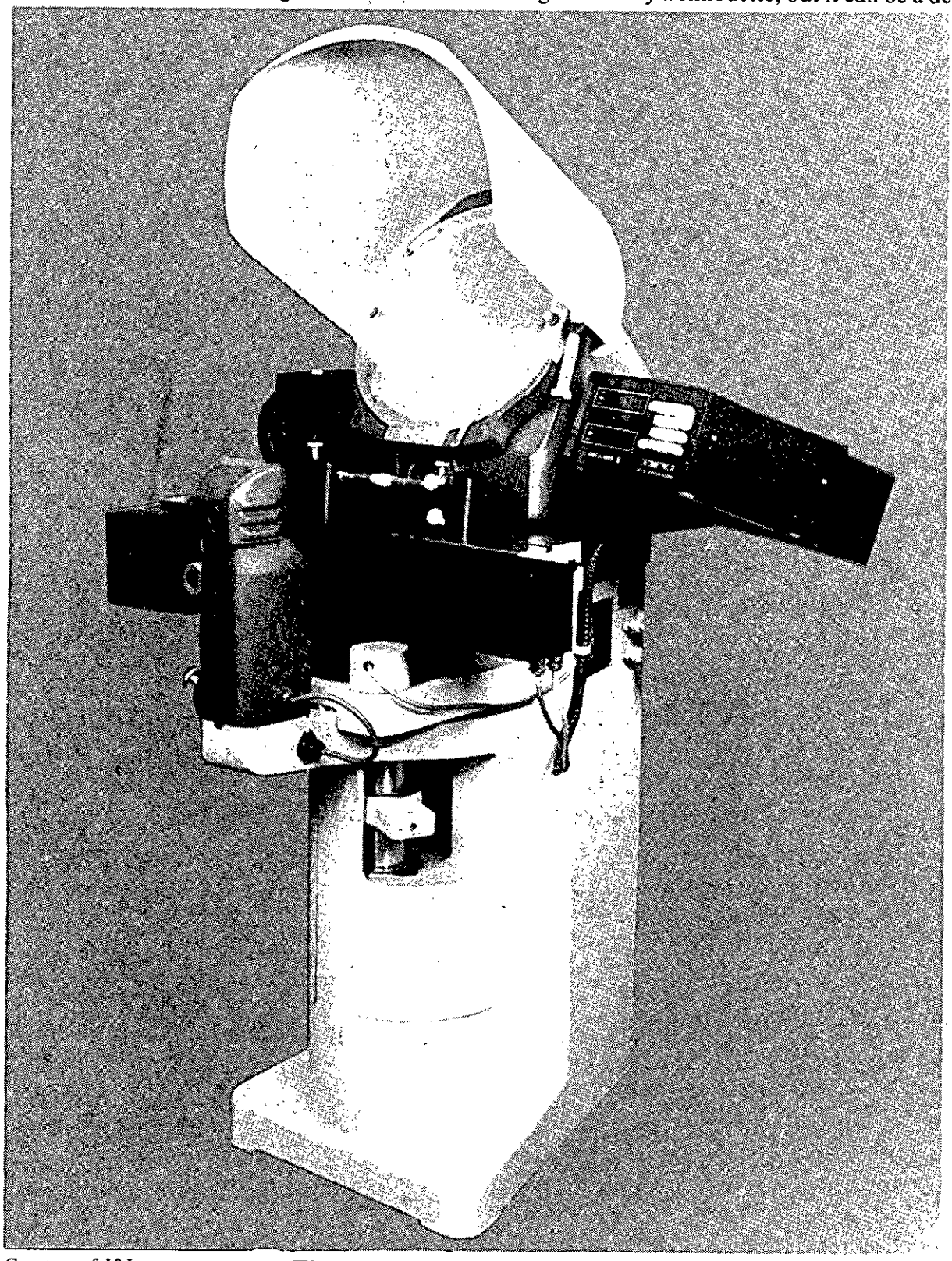

Courtesy of J&L.

Figure 4-2. Optical Comparator

Downloaded from http://www.everyspec.com

image if a light concentrator is used for surface illumination. The use of a comparator involves three basic elements:

1. Comparator
2. Screen layout or chart gage
3. Holding device (staging fixture—refer to par. 7.8 for design principles).

An optical comparator may be used to determine the size and form of products that would be difficult to measure by other methods because of size, material composition, or dimensional characteristics. It is applicable to forming tools, threads, cams, gears, jigs, dies, fixtures, hobs, and other irregularly shaped parts (Ref. 2).

Basic optical comparator applications may be categorized into three types: gaging, measurement, and measurement by translation. When conformance to tolerance limits is required, gaging is employed. Gaging is essentially a "Go" or "Not-Go" inspection made by comparison of the image to a chart gage that serves as a master. Analytical inspections that involve actual measurement of dimensions entail micrometer measurement of the horizontal or vertical table movement. Measurement by translation employs tracer techniques to measure indirectly features that cannot be projected directly by a light beam. Inspection by this method involves the use of a tracer fixture. This fixture consists of a stylus that contacts the surface being inspected and a follower that by translation travels through the same motions as the stylus and whose movement is projected to the viewing screen. The movement on the viewing screen is compared with a chart gage (Ref. 3).

Theoretically, distances of approximately 0.0001 in. at the product can be measured with an optical comparator. The actual linear measuring accuracy is limited to approximately 0.0002 in. (Ref. 1).

The chart gage determines the effective use of the optical comparator and serves as the reference point in gaging or measuring. The viewing screens of most comparators are also chart gages with horizontal and vertical centerlines, although many also include one or two angular lines. Viewing screens of these types are used to make measurements.

Most chart gages are produced on glass or plastic. Glass chart gages show very clear chart lines, are impervious to oil or grease, are less sensitive than plastic to standard cleansing agents, and are affected minimally by temperature and humidity variations. Plastic charts are less expensive, lightweight, and easy to handle and store. There are three types of chart gages:

1. *Replacement*. A replacement chart gage always should be produced on glass. It is used in place of the standard viewing screen and should have the same thickness, flatness, and surface texture as the original viewing screen.

2. *Overscreen*. Overscreen chart gages are fastened over the projector viewing screen and are preferable to replacement chart gages if frequent changes in setup are necessary or if a small chart on a large screen will suffice.

3. *Overlay*. Overlay chart gages differ from overscreens in that they are hand held and positioned by the operator. Overlay chart gages are not intended for use as permanent setups but offer advantages in simplified staging.

Effective error is the layout error divided by magnification and is equivalent to a gagemaker's tolerance. The layout error of handscribed overlay chart gages should not exceed 0.005 in.; however, machine-scribed chart gages can be produced with a layout error of 0.001 in.

Overlay chart gages should first be pencilled and then traced with full strength ink or photographically processed. Care should be taken to maintain uniform line thickness and to blend radii and corners.

The following suggestions may help to produce satisfactory layouts:

1. When broken lines are required, the line is ruled in completely and then parts of the line are erased. This procedure will insure a straight and uniform line.

2. When circles and radii are drawn, a good nonslip center for divider or compass points is made by attaching two or more small pieces of cellulose or draftsman's tape, one upon the other, to the surface of the layout.

3. For greater accuracy, a set of points is fitted to the jaws of a vernier caliper or special gage block accessory for measurement.

4. In the lower magnifications many of the commercially manufactured optical comparators project

Downloaded from http://www.everyspec.com

reversed and inverted images on the screen. This situation should be taken into consideration before the screen layout is prepared.

5. The inside or outside of the line should be to the dimension but not the center of the line. Indicate on the chart whether the inside or outside of the line is to the dimension.

The functions of the staging fixture are to hold the part securely, to reduce setup time for repetitive inspections, and to orient the part with respect to the chart gage (Ref. 1). Commonly used fixtures such as those shown in Figs. 4-3 through 4-5 include V blocks, centers, and riser blocks; a rotary base with self-centering jaws; and a rotary glass staging fixture, respectively. The V blocks with matched centers are designated to hold cylindrical parts with center holes (either male or female) or cylindrical parts in a V block. Larger diameter parts can be staged on the matched riser block set under the standard V blocks. The rotary base with self-centering jaws clamps small cylindrical, flat, and multifaced parts on the centerline of the base. The rotary glass staging fixture is used with vertical comparators. Also available are staging fixtures for electronics parts, screw machine products, flat tools or products, small cylindrical products, and products with right angles. Some parts will require the design of special staging fixtures. The design principles for fixture gages presented in par. 7.8 also apply to the design of staging fixtures. Contact wear in a staging fixture is rarely a problem.

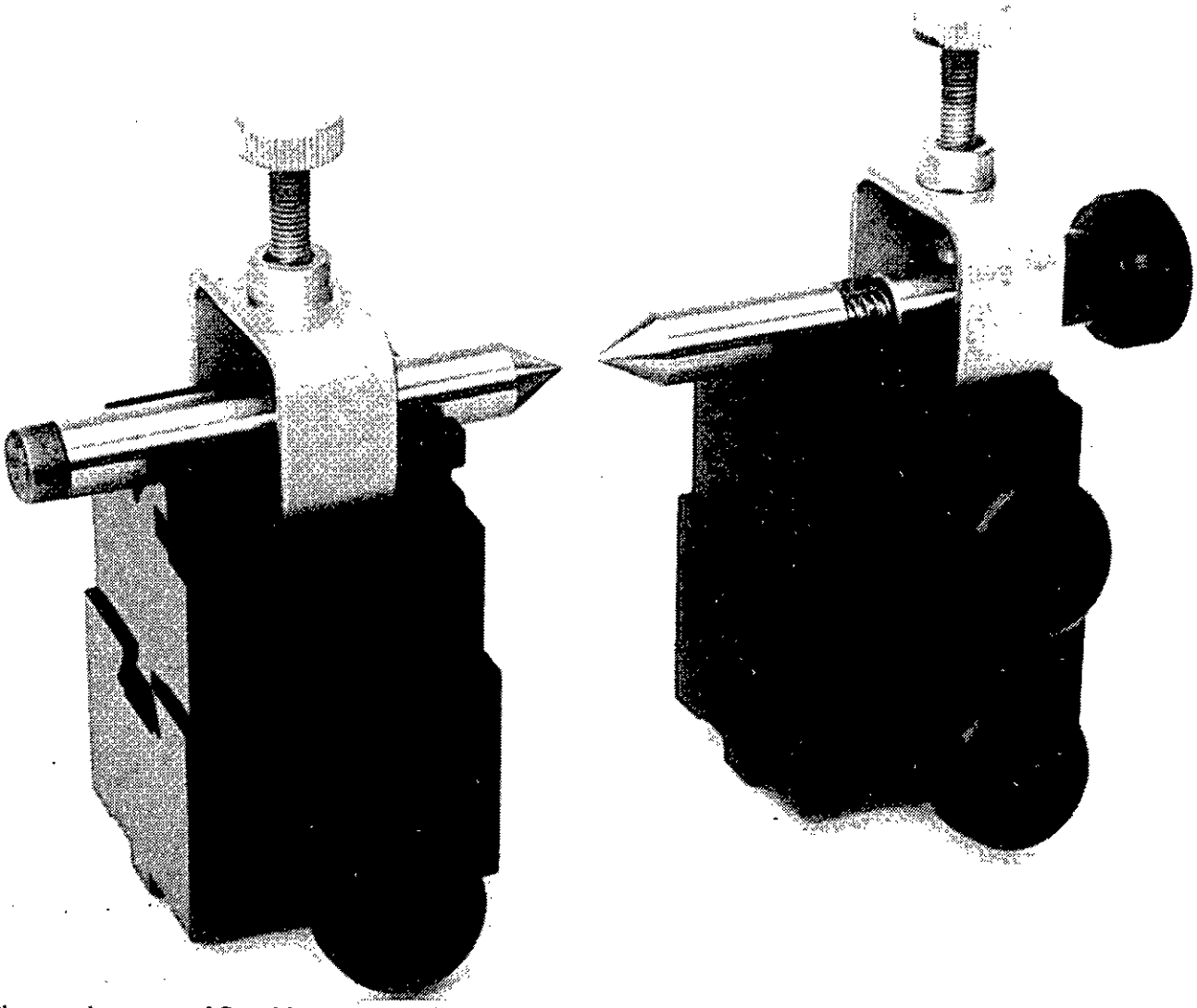

Photograph courtesy of Gage Master Corporation.

Figure 4-3. V Blocks, Centers, and Riser Blocks

Downloaded from http://www.everyspec.com

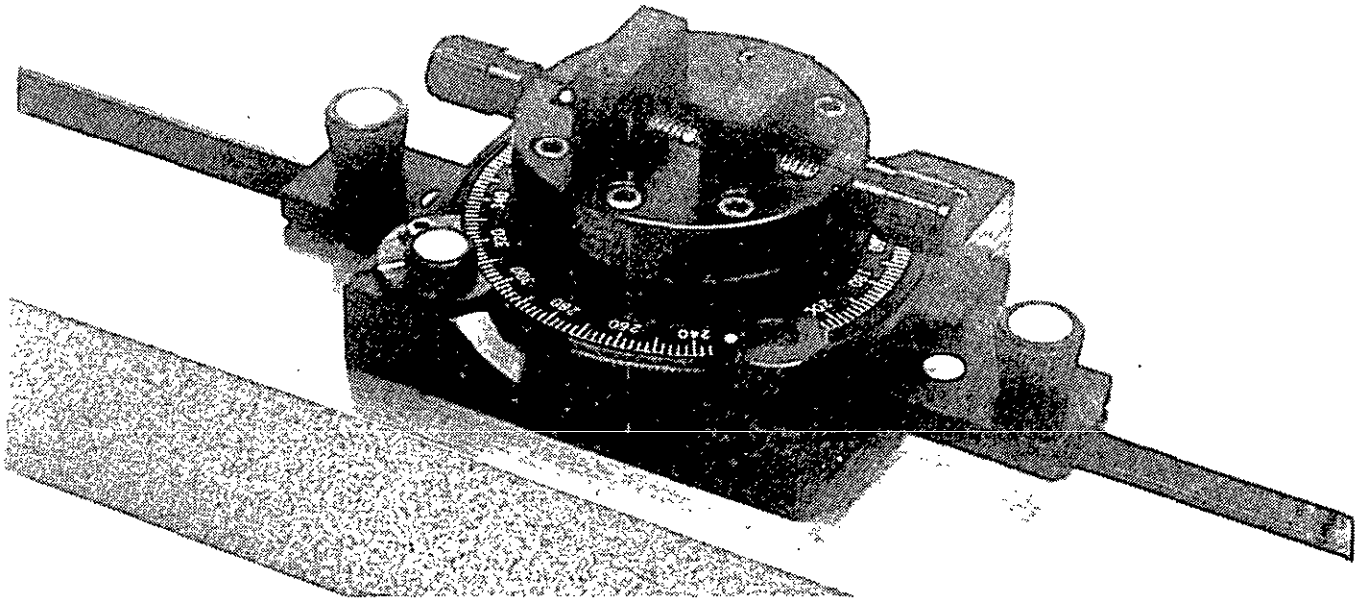

Photograph courtesy of Gage Master Corporation.

Figure 4-4. Rotary Base With Self-Centering Jaws

Photograph courtesy of Gage Master Corporation.

Figure 4-5. Rotary Glass Staging Fixture

Downloaded from http://www.everyspec.com

The advantages of an optical comparator to other gaging and measuring methods are (Refs. 1 and 2)

1. No deformation of the gaged object
2. No gage wear
3. All of the dimensions and part interrelationships that occur in a common observational plane can be gaged in a single setting without retooling or additional instrumentation.
4. Standard charts are available for gaging repetitive forms such as circular arcs with different radii, angles, thread forms, and gear contours.
5. Areas not accessible to standard gages, such as surface contours, are made accessible by the use of a tracer fixture or optical sectioning accessory.

The optical comparator also has the following advantages over the toolmaker's microscope:

1. The projected image can be viewed simultaneously by several people.
2. The instrument is sturdier than a microscope.
3. It can accommodate larger and heavier test objects.
4. For a given magnification the field of view exceeds the field of view of the microscope.

Disadvantages of optical comparators compared to other gaging and measuring methods include the requirement of relatively large amounts of floor space and limits to the size of the workpiece that can be accommodated. Although much larger workpieces can be measured by successively indexing, the field size—a function of screen diameter and magnification—ranges from 0.8 in. to 3.0 in. in diameter in most standard optical comparators. Another potential limitation of the optical comparator is operator error. To achieve accurate measurement, the workpiece must be properly staged, the charts accurately placed, and the comparator sharply focused. Additional sources of error include the backlash inherent in screw-type measuring devices, deflection of staging members, distortion, field curvature, unsharpness of edges, chromatic aberration, spherical aberration, and low contrast.

Accessories available for optical comparators include standard chart gages, fixturing devices, tracer attachments, optical sectioning processes, tungsten halogen light sources, reflectors, and computer controls with digital readout and printers to produce hard-copy records of measurements.

Standard chart gages include radius chart gages, grid chart gages, protractors, toolroom chart gages, thread chart gages, and many scales. Numerous sizes of standard fixture bases are available to fit projector tables with standard keyways. Tracing attachments, optical sectioning accessories, tungsten halogen surface illumination, photographic attachments, computer control with digital readout (measurements in increments of 0.00005 in.), and printers are some of the available options.

4.2.1.3 Optical Flat

The optical flat is a highly accurate, transparent test surface that gages by the use of light-wave interference. Applications of the optical flat include checking the flatness of optically flat surfaces and checking a working gage block against a master block. The accuracy of steel balls, plug gages, and the amount of taper in male parts may be checked as well (Ref. 2).

When gaging is by light-wave interference, the light wave is the fundamental unit of measurement; therefore, for optimal use of the optical flat, a monochromatic light source is needed. Most commercially available light sources employ yellow helium lamps. The wavelength of helium light is 0.59 μm. Other commonly used light sources are sodium vapor and mercury vapor.

The working surface of an optical flat generally has one of four degrees of flatness and is classified as a commercial, working, master, or reference flat. The degree of flatness of a commercial flat is 8 μin., i.e., no point deviates in height from any other point by more than 8 μin. Working flats are 4 μin., master flats are 2 μin., and reference flats are 1 μin.

When the flatness of a surface is tested, the optical flat is placed on the product and the monochromatic light is directed onto the flat. (The angle of incidence should be reasonably close to perpendicular.) If the product surface is not flat (so there is air space between the flat and the surface), light waves reflect from the work surface and from the underside of the flat to form dark interference bands. Fig. 4-6 (Ref. 4) illustrates five typical shapes assumed by the interference bands. In Fig. 4-6(A), the tested surface is spherical, because the rings are more widely spaced at the center than at the edges. If, when the flat is pressed at the center of the rings,

Downloaded from http://www.everyspec.com

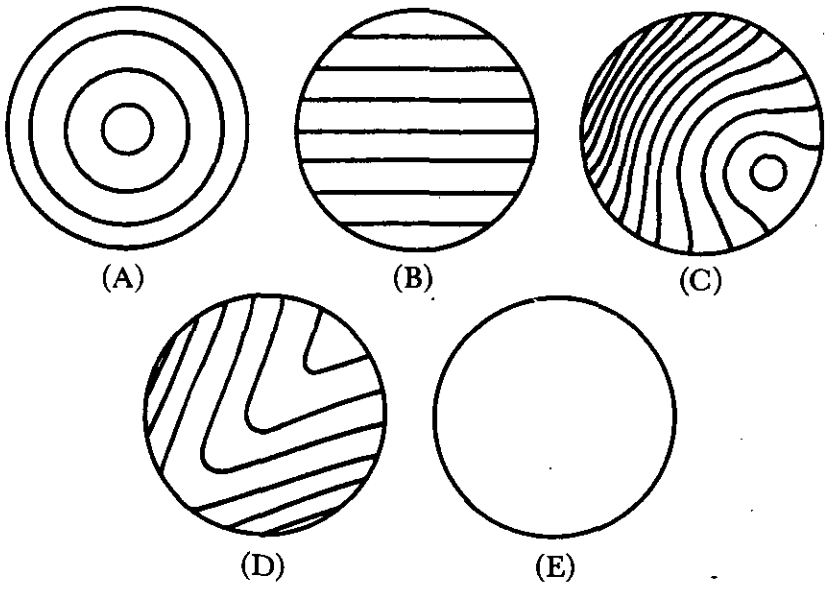

From *Engineering Precision Measurements* by A. W. Judge. Copyright © by Chapman and Hall, Ltd., 1957.

Figure 4-6. Typical Optical Flat Interference Results

the fringes move away from the center, the product surface is concave, whereas if the fringes move toward the center, the product surface is convex. Fig. 4-6(B) shows a perfectly flat surface, but contact between the flat and the product surface is at an angle. Fig. 4-6(C) indicates that the product surface is either convex or concave near the lower right-hand edge. Fig. 4-6(D) denotes a ridge or valley. Fig. 4-6(E) shows a perfectly flat surface under test.

The point or line of contact between the flat and the workpiece is indicated by a pronounced light spot or line. A series of straight interference bands, such as those illustrated in Fig. 4-6(B), indicates a slight air wedge between the flat and the workpiece. Each interference band indicates an airspace thickness of one half wavelength (0.295 μm for helium light); therefore, to calculate the total height difference, the total number of interference bands is multiplied by one half of the wavelength of the light used. Fig. 4-7, in which an optical flat is shown at an exaggerated inclination to the product, illustrates the production of interference bands.

The advantage of using light-wave methods to compare gage blocks is that the comparison can be made

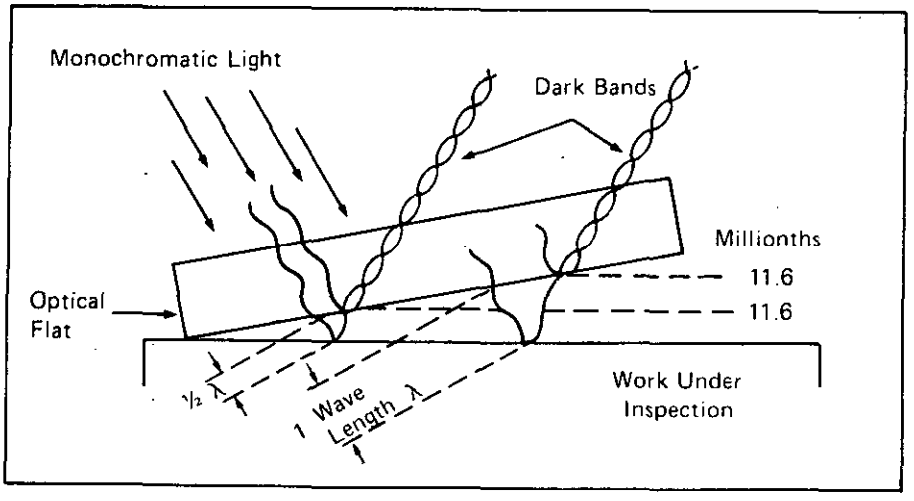

Figure 4-7. Production of Interference Bands

Downloaded from http://www.everyspec.com

without handling the gages: consequently, temperature errors are avoided. General disadvantages to using optical flats include

1. To make accurate measurements, the operator must understand clearly the meaning of interference bands.
2. Inspection with the optical flat is a slow process.

The primary source of error when the optical flat is used is the presence of contamination, such as grit, dust, and oil, on the product or the flat.

4.2.2 MANUAL ALIGNMENT INSTRUMENTS

The use of manual alignment instruments and accessories for dimensional inspection is referred to as optical tooling. Optical tooling combines the principles of surveying and optics in an approach to dimensional inspection. Although generally employed in the inspection of large products, the approach is flexible enough to be applied to almost any type of precision measurement task. For the purposes of this handbook optical tooling may vary from a simple alignment telescope and target to layouts involving several telescopes, tooling bars, stands, and targets, which cover a considerable area.

4.2.2.1 Autocollimator

The autocollimator is a sensitive optical device used to measure small angles and from which flatness and parallelism can be determined. As illustrated in Fig. 4-8, the autocollimator consists basically of a telescope, with an illuminated reticle, focused at infinity. The illuminated reticle projects a beam of collimated light through the objective lens onto a plane mirror normal to the optical axis in front of the telescope. The collimated light is reflected back through the objective lens to form a second image of the reticle directly superimposed on the first. Rotation of the mirror by the angle θ about any axis perpendicular to the optical axis will cause the return image to be displaced by an amount D. The displacement D is determined by the relation

$$D = f \tan(2\theta), \text{ in.} \tag{4-1}$$

where

θ = displacement angle, sec
f = focal length of objective lens, in.

The reticle may be graduated so that D, $2D$, θ, or 2θ may be read directly.

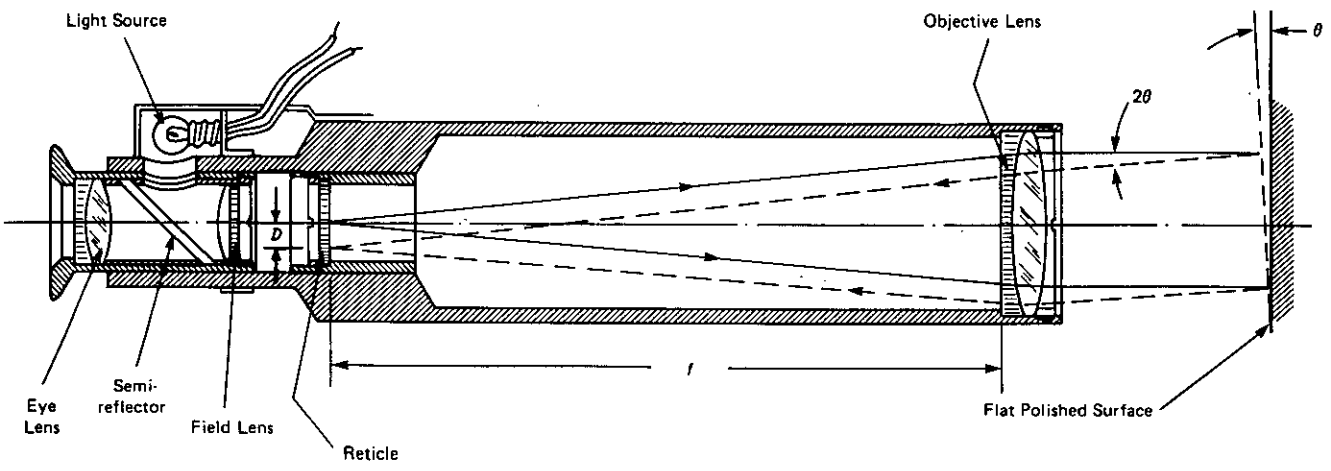

Figure 4-8. Autocollimator

Downloaded from http://www.everyspec.com

Other alignment instruments—i.e., those that can be adjusted to infinity focus or to which autocollimating attachments can be added—can be converted into autocollimators of somewhat lesser capability. Some alignment telescopes are commonly used with autocollimating attachments. Theodolites with illuminated reticles can be focused at infinity and used as autocollimators (Ref. 5).

The sensitivity of the autocollimator is generally limited to 0.1 sec. Sensitivity and accuracy are functions of the focal length of the objective lens and the power of the eyepiece. Increasing objective focal length permits the linear spacing of the graduations to increase, which allows the reading of smaller angles. The barrel may become unwieldy if the focal length is increased too much; folding the optical path avoids this problem. Increasing the power of the eyepiece reduces the field of view, which results in a limited range of the graduated scale. An autocollimator of 10 in. focal length will discern mirror tilt of 1 sec (Ref. 5). Under average inspection conditions, however, 0.5 min is more practical.

4.2.2.2 Alignment Telescope

The alignment telescope, illustrated in Fig. 4-9, is a relatively inexpensive instrument used to establish a line of sight and to measure vertical and horizontal displacement from the line of sight. Most alignment telescopes can be focused from very near objects—usually 18 in., although some will focus down to the front surface of the objective lens—to infinity. Magnification at infinity focus ranges from 30× to 60×. As the telescope is focused on closer objects, magnification decreases to about 4×, and the angular field increases correspondingly (Ref. 5). Most alignment telescopes have micrometer-measuring capability along one or two axes in the image plane.

The sensitivity of the alignment telescope to target displacement from the line of sight is a function of target distance. As the distance to the target increases, the apparent size of the target in the field of view decreases despite the increased magnifications. As the apparent size of the target decreases, the viable effect of the optical micrometer also decreases because it represents linear measure in the true scale of the target plane. The sensitivity of the alignment telescope is generally accepted to be ±1 part in 200,000 versus object distance (Ref. 5), which corresponds to ±1 sec. Displacement from the line of sight can be measurable to ±1/200,000 of the object distance (Ref. 5). The overall accuracy may actually be slightly less because of variations in the direction of line of sight with a change of focus.

4.2.2.3 Theodolite

The theodolite, shown in Fig. 4-10, usually is used in surveying to measure angles in both the horizontal and the vertical planes. An illuminated reticle can be added for autocollimation. The theodolite consists of a telescope in an altitude-azimuth mount on a leveling base with full circle horizontal and vertical scales, all mounted on a tripod or other instrument stand. The instrument typically has 30× magnification and is capable

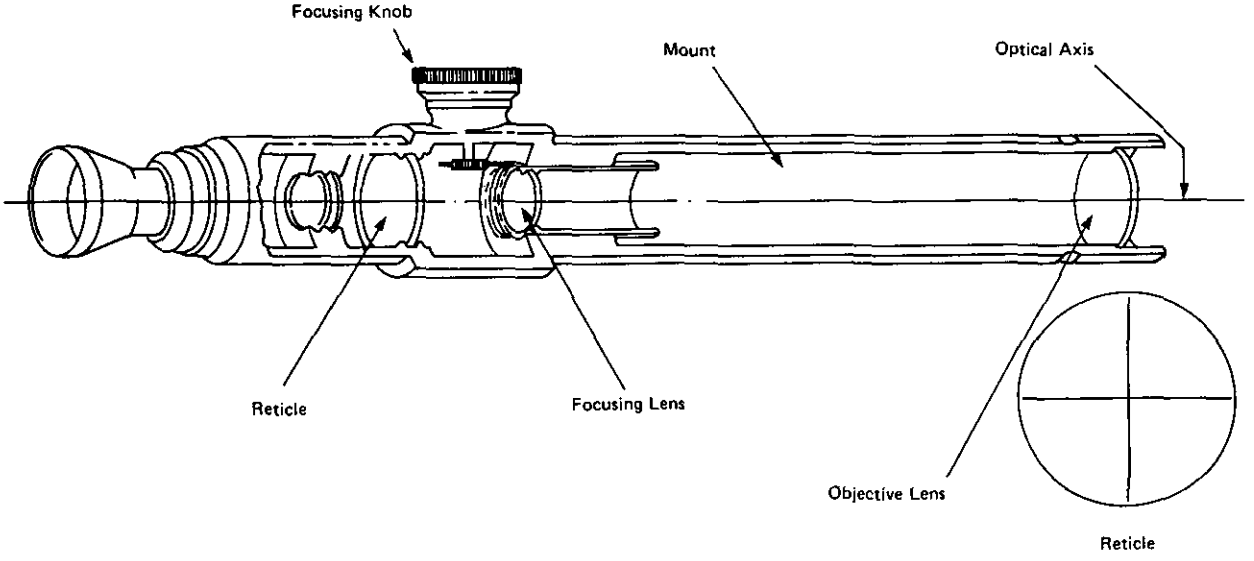

Figure 4-9. Alignment Telescope Construction

Downloaded from http://www.everyspec.com

of reading angles in the horizontal and vertical planes to 1 sec. The minimum focusing distance of the theodolite is 6 in.

Theodolites can be characterized—based on their capabilities—as first, second, third, or fourth order. The categories are based on geodetic survey triangulation. The (US) Federal Board of Surveys and Maps defines the allowable average error of closure in the triangle of each system as (Ref. 5):

First order: 1 sec
Second order: 3 sec
Third order: 6 sec
Fourth order: undefined.

The required instrument accuracies are not explicitly defined but can be assumed to be higher because the allowable error represents total error. For example, first-order theodolites can be read directly to 1/10 sec and allow estimation of smaller angles. First- or second-order theodolites are generally used for optical tooling applications (Ref. 5).

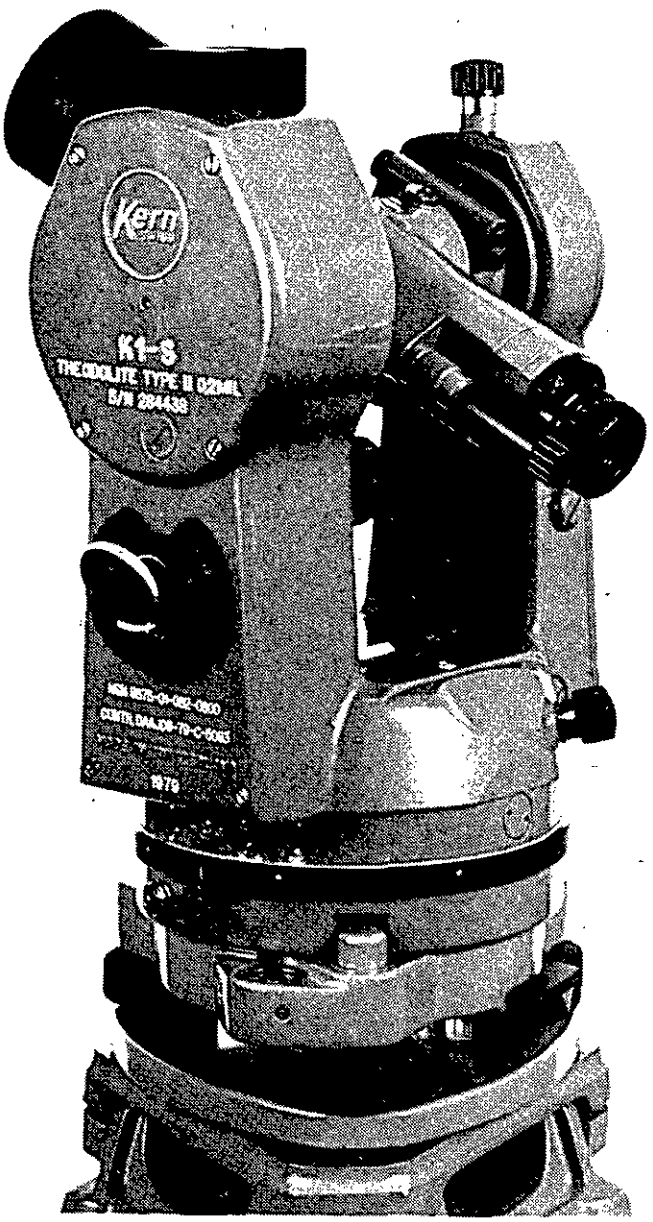

Courtesy of Kern.

Figure 4-10. Theodolite

Downloaded from http://www.everyspec.com

4.2.2.4 Sight Level

The sight level, shown in Fig. 4-11—also referred to as tilting level or optical tooling level—is used to establish a horizontal line of sight, i.e., perpendicular to the force of gravity, and to determine small vertical displacements from it through the use of an optical tooling scale. It consists of a telescopic sight mounted on a vertical spindle, gravity references (usually a circular spirit level and a vial-type spirit level), and means of making the spindle approximately vertical (Ref. 5). Most sight levels used in the field are automatic levels that are manually set to the approximate level and then automatically centered by a compensator.

The tilt axis of the sight level must be placed directly in line with the azimuth axis, otherwise the height of the line of sight might change with a change in direction of sighting.

Leveling can be performed with varying degrees of convenience and accuracy with a number of instruments other than sight levels, such as jig transits, theodolites, or alignment telescopes (Ref. 5).

The accuracy of a quality sight level is considered to be 1 sec (Ref. 4). Displacements from the horizontal that are accurate to thousandths of an inch can be determined at distances up to 100 ft from the sight level. The accuracy of projecting the level line of sight to varying distances is a function of the accuracy of the focusing slide mechanism in the telescope (Ref. 5), which is a potential source of error. Other sources of error include a column of hot or cold air along the line of sight, a partial obstruction along the line of sight, or dirt or dust on the lens.

4.2.2.5 Alignment Transit

A number of instruments—including the jig transit shown in Fig. 4-12, transit squares, and cross-axis-telescope transit squares—can be classified as alignment transits. They are all derived from the surveyor's transit and have the basic function of establishing a plane vertical or normal to the line of sight.

The alignment transit consists of a telescopic sight mounted on horizontal axis trunnions that, in turn, are mounted on a vertical axis. The telescope can be tilted up and down, and the whole assembly can be rotated 360 deg in both the vertical and horizontal planes.

The alignment transit is the most nearly universal of all optical instruments for optical tooling. Its principles

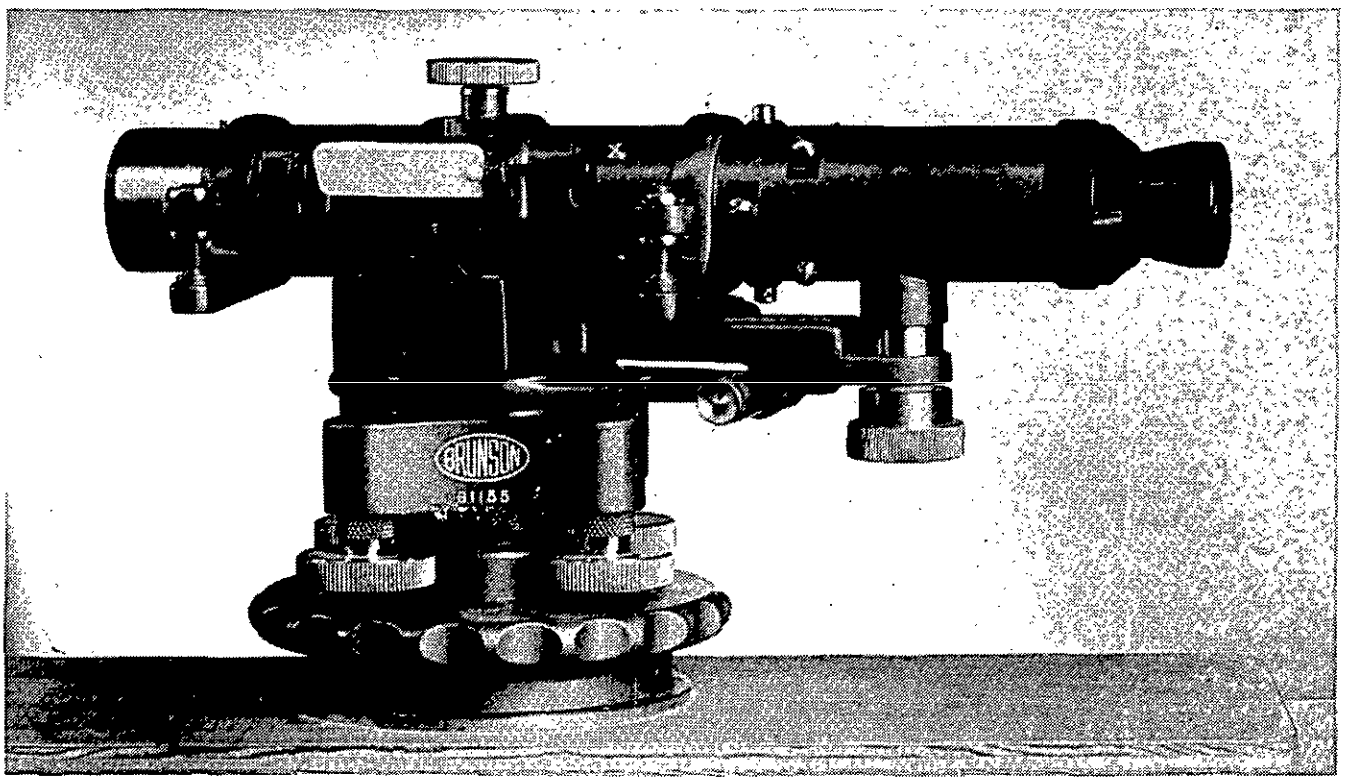

Courtesy of Brunson Instrument Company.

Figure 4-11. Sight Level

Downloaded from http://www.everyspec.com

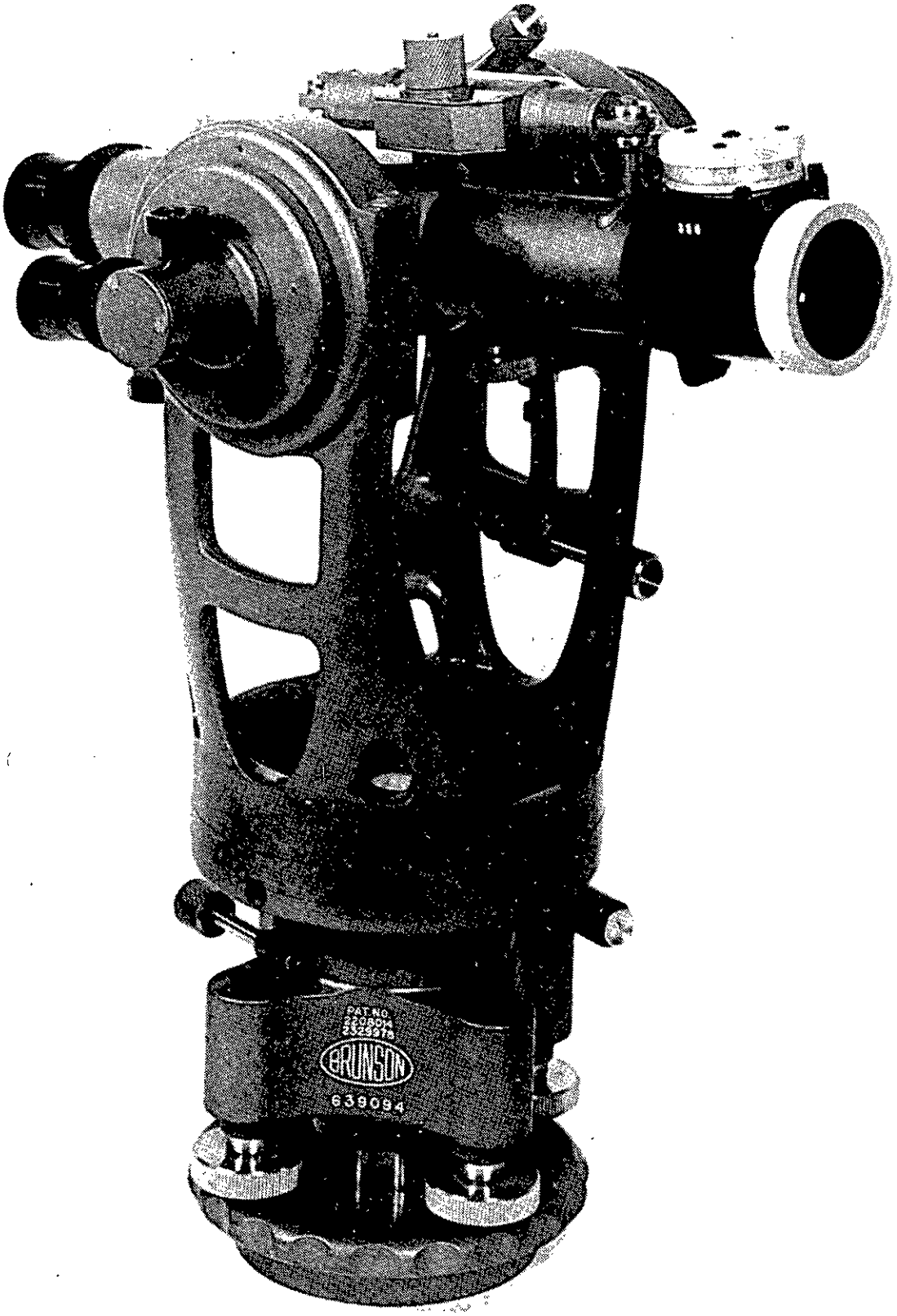

Courtesy of Brunson Instrument Company.

Figure 4-12. Jig Transit

Downloaded from http://www.everyspec.com

of operation are to some degree those of the theodolite, the sight level, the alignment telescope, and the autocollimator; this similarity depends, however, on the mode of application and the accessories employed (Ref. 5).

The alignment transit can measure deviations from the generated plane to the order of 0.001 in. at 17 ft, or about 1 sec (Ref. 5).

4.2.2.6 Accessories

The paragraphs that follow list and briefly describe accessories available for use in optical tooling systems. Although some of the accessories, e.g., mirrors, targets, and instrument stands, are integral parts of optical tooling systems, they are included here because of their applicability to different optical tooling instruments and because of the variety available.

The alignment collimator, shown in Fig. 4-13, is a target instrument commonly used with alignment telescopes. The collimator is used for alignment testing over long distances, particularly inside bores. With the alignment telescope, measurements of linear and angular displacement can be made (Ref. 1). It is also used as an instrument in the inspection of optics, as discussed in par. 5.2.1.

In the front part of the alignment collimator is a target with radial lines defining the center. A collimating lens with an illuminated reticle mounted in its focal plane is behind the front target. Light rays from the reticle

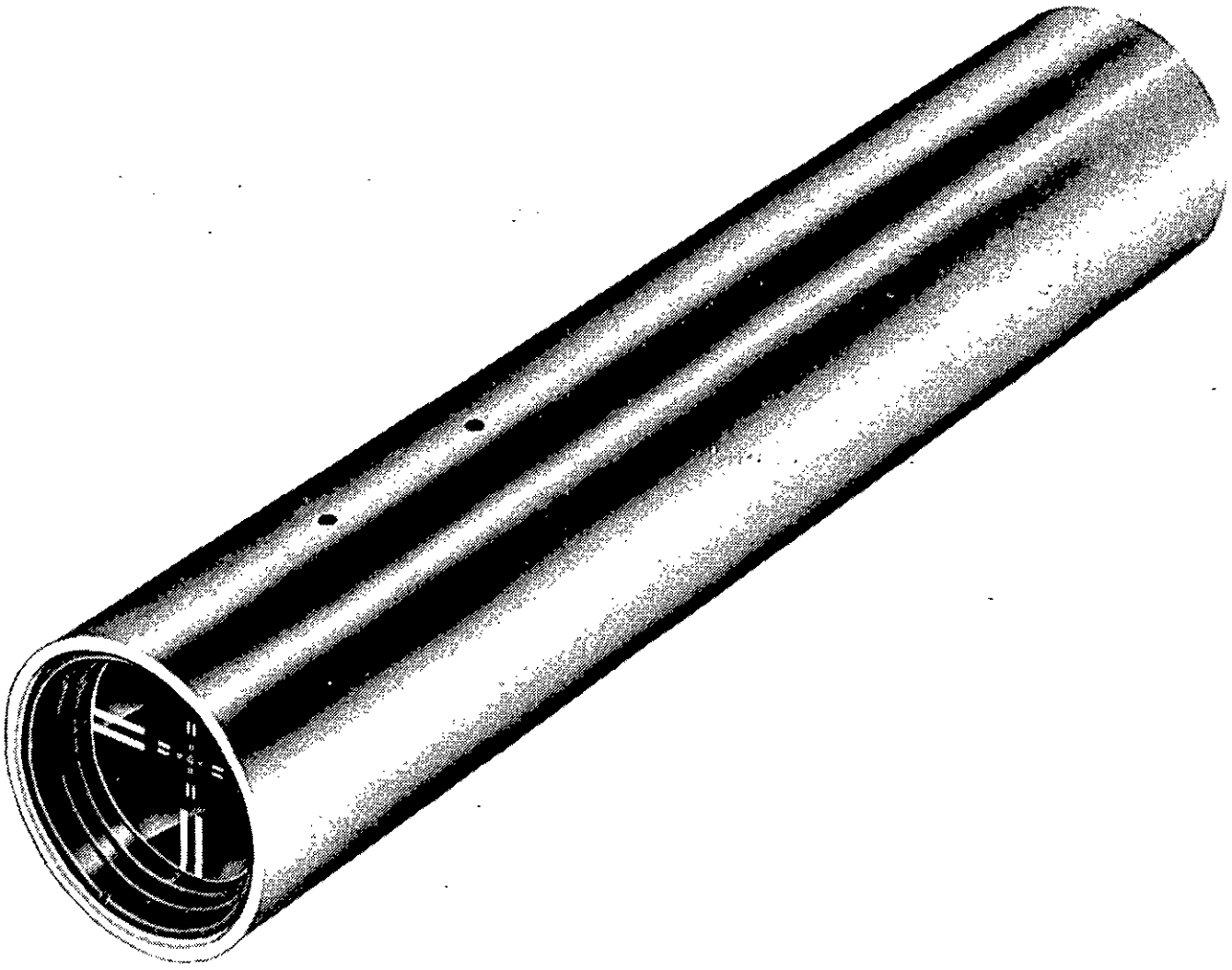

Courtesy of K+E Electro-Optical Products.

Figure 4-13. Alignment Collimator

Downloaded from http://www.everyspec.com

are collimated and projected through the lens. The centers of the front target and the illuminated reticle represent the optical axis of the collimator. Fig. 4-14 is a diagram that illustrates the principles of operation of a collimator viewed through an alignment telescope.

Mirrors are used mainly to establish a plane perpendicular to the line of sight in autocollimation and autoreflection. A front surface mirror flat to one-eighth wavelength of sodium light or better is recommended for use with the autocollimator. An axle mirror is a front surface mirror that is optically flat within one-quarter wavelength of light and can be screwed on either end of the telescope axle of a jig transit. The magnet blank mirror consists of an optically flat, circular front surface mirror within one-quarter wavelength of light with one to three magnetic feet cemented to the back of the mirror. The plumbing mirror, illustrated in Fig. 4-15, is a horizontal mirror used to establish an optical plumb line. The leveling mirror, illustrated in Fig. 4-16, is a pair of vertical parallel reflecting surfaces that can be used in the place of an alignment telescope level (Ref. 6).

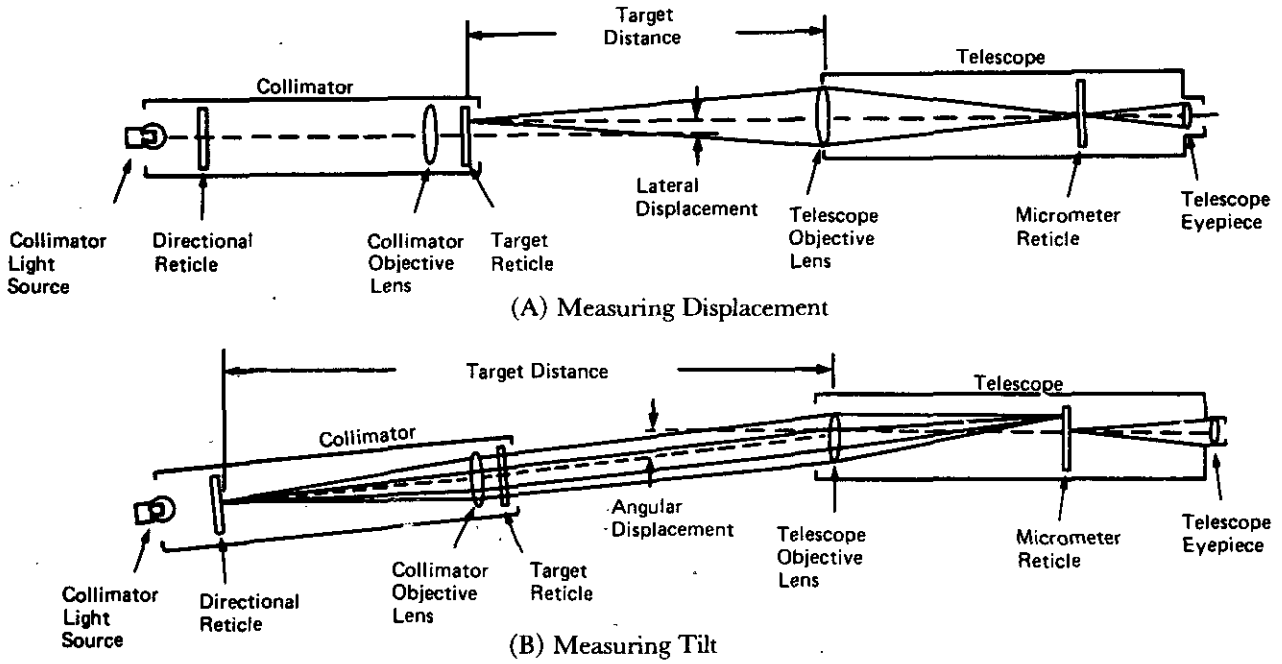

From *Handbook of Dimensional Measurement* by F. T. Farago. Copyright © by Industrial Press, Inc., 1968.

Figure 4-14. Collimator Viewed Through Alignment Telescope

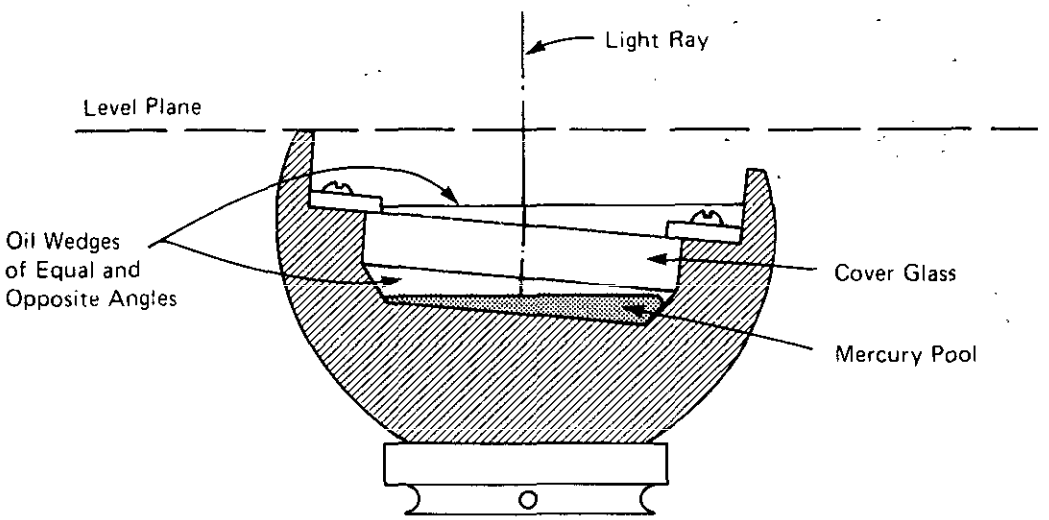

From *Optical Tooling for Precise Manufacture and Alignment* by P. Kissam. Copyright © by Lockheed-California Company, 1962.

Figure 4-15. Plumbing Mirror

Downloaded from http://www.everyspec.com

Fig. 4-17 shows the optical cube or cube mirror. Optical cubes and polygons can be used to deviate the line of sight through a known angle in calibrating rotary tables. The cube also simplifies checkout of coordinate motion of machine tools such as lathes, milling machines, and boring mills. The optical square, shown in Fig. 4-18, can be used with the alignment telescope to establish a plane perpendicular to the line of sight through the use of a pentaprism, which performs the same functions as a jig transit. As illustrated in Fig. 4-19, the

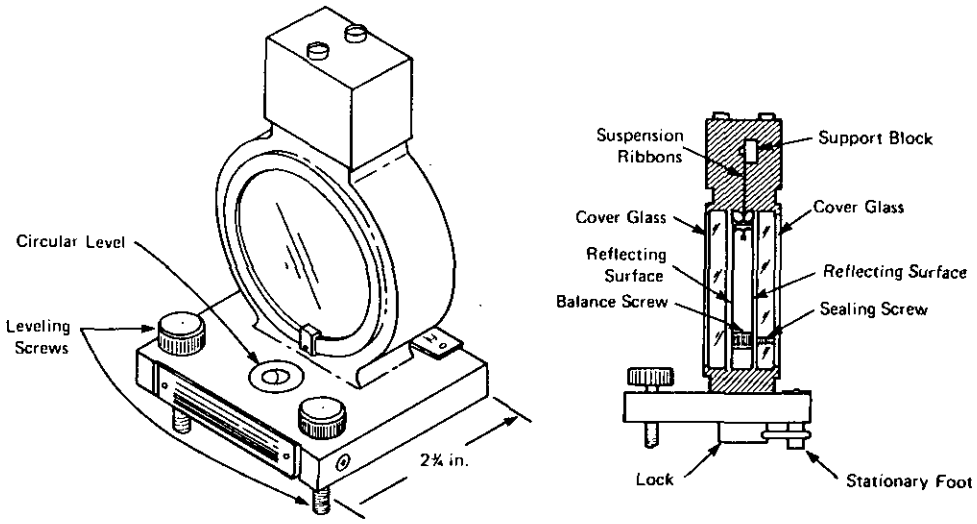

From *Optical Tooling for Precise Manufacture and Alignment* by P. Kissam. Copyright © by Lockheed-California Company, 1962.

Figure 4-16. Leveling Mirror

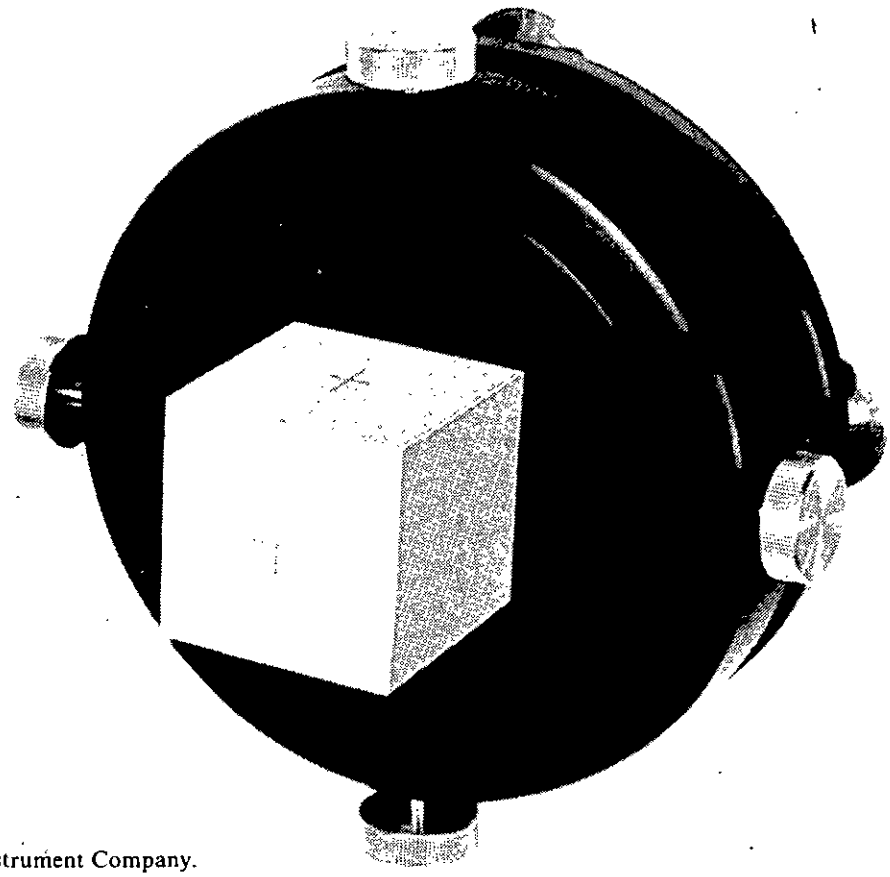

Courtesy of Brunson Instrument Company.

Figure 4-17. Cube Mirror

Downloaded from http://www.everyspec.com

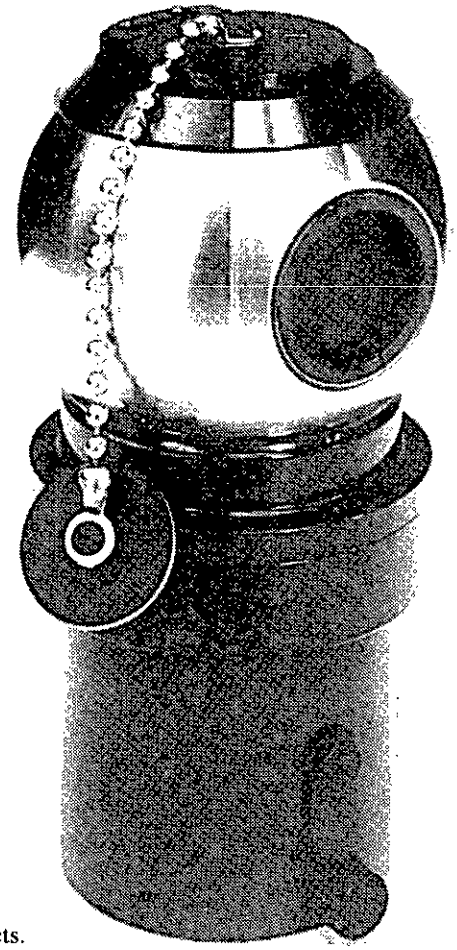

Courtesy of K+E Electro-Optical Products.

Figure 4-18. Optical Square

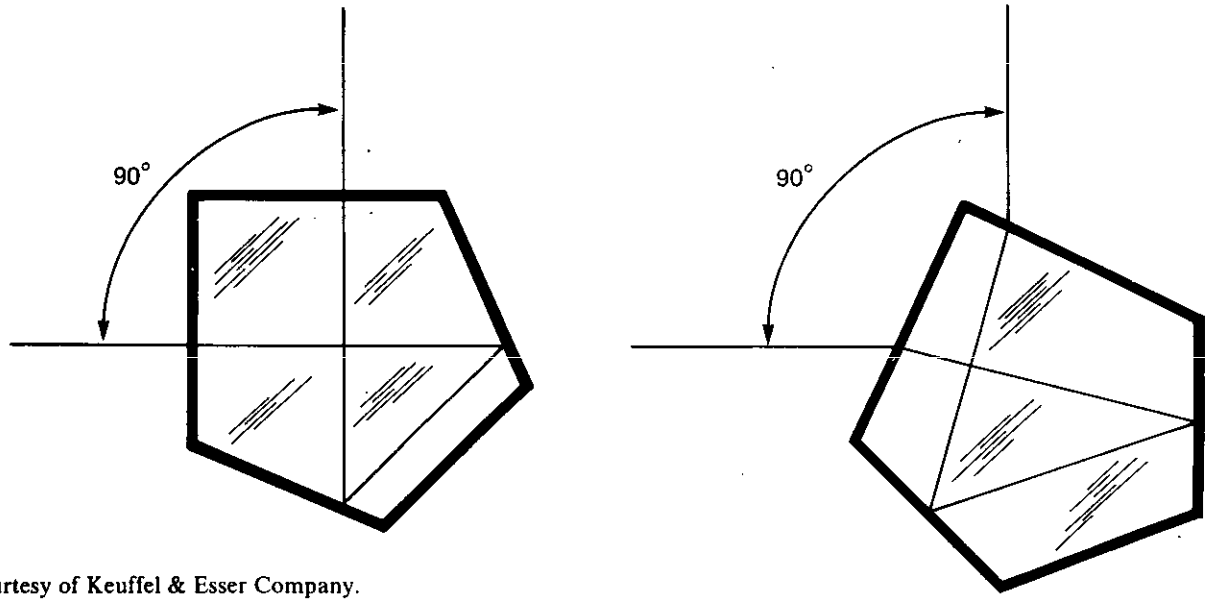

Courtesy of Keuffel & Esser Company.

Figure 4-19. A Pentaprism Turns a Line of Sight 90 deg Independent of Its Orientation

Downloaded from http://www.everyspec.com

pentaprism turns the line of sight 90 deg independent of its orientation. Although the optical square is harder to aim and to set up and cannot be used for projections, it holds its adjustments almost permanently, whereas a jig transit may not (Ref. 6).

The optical micrometer, shown in Fig. 4-20, moves the line of sight parallel to itself—up and down or right and left—by a distance indicated on a scale. Measuring ranges of typical instruments vary from ±0.100 to ±0.200 in. in 0.001-in. increments. An optical micrometer with vernier scale can be read to 0.0001 in.

Various eyepiece accessories are available for optical tooling instruments. The autocollimation conversion unit, shown in Fig. 4-21, converts a sight level or alignment transit into an autocollimator. Angle eyepieces are available that turn the line of sight between 45 and 90 deg. The projection eyepiece is used in place of the

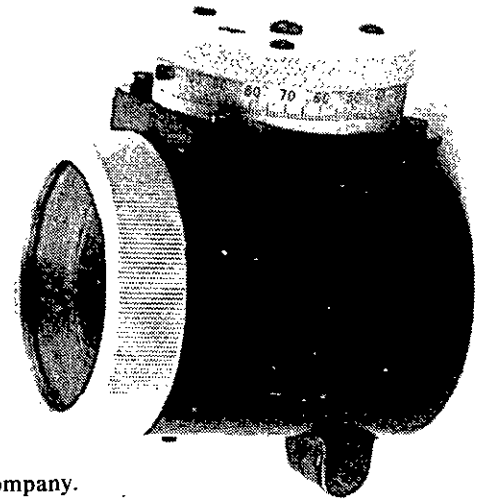

Courtesy of Brunson Instrument Company.

Figure 4-20. Optical Micrometer

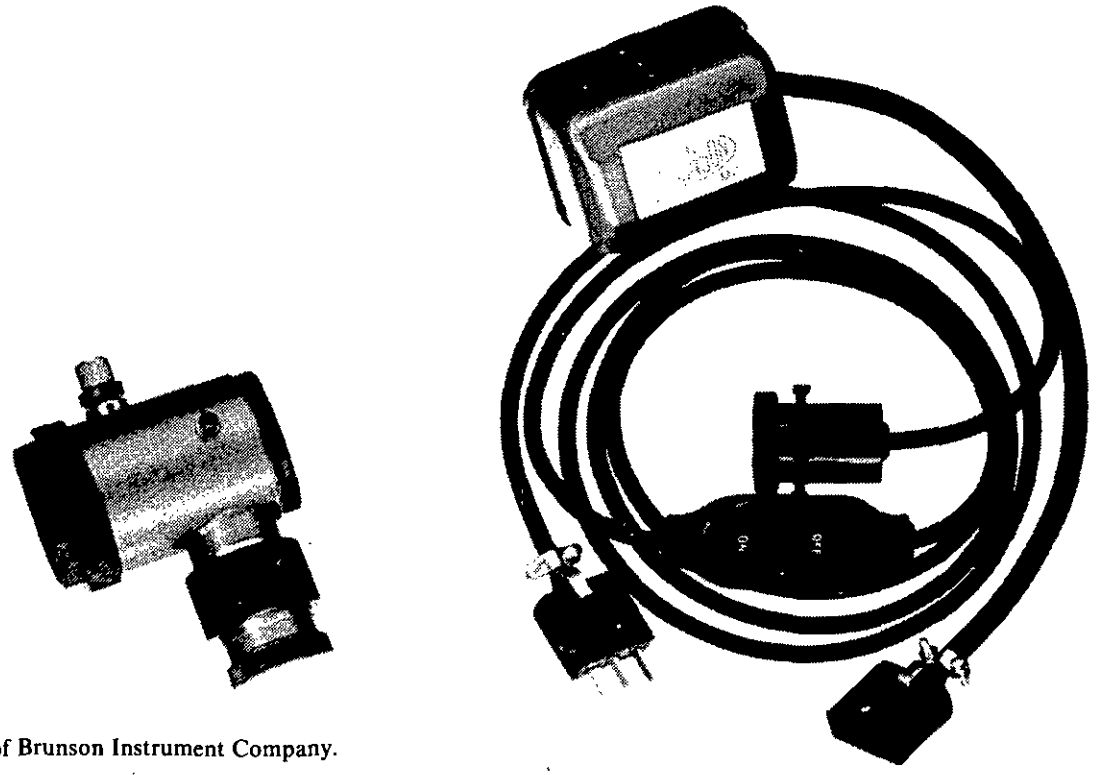

Courtesy of Brunson Instrument Company.

Figure 4-21. Autocollimation Conversion Unit

Downloaded from http://www.everyspec.com

standard eyepiece of transits and telescopes so that the reticle pattern may be projected onto the target object. Fig. 4-22 shows a combination autocollimation, projection, and right-angle eyepiece.

Four types of targets, as shown in Fig. 4-23, are commonly used in optical tooling: alignment, displacement, autoreflection, and mirror. Alignment targets are used to establish a point of reference. The displacement target also establishes a point of reference and additionally has horizontal and vertical scales to measure displacements of as much as 0.300 in. from the line of sight. The autoreflection target is placed over the end of the telescope to give a reference point on the line of sight for autoreflection. A mirror target is used to establish a point of reference and also, by autoreflection and autocollimation, to control the tilt of the object upon which it is mounted.

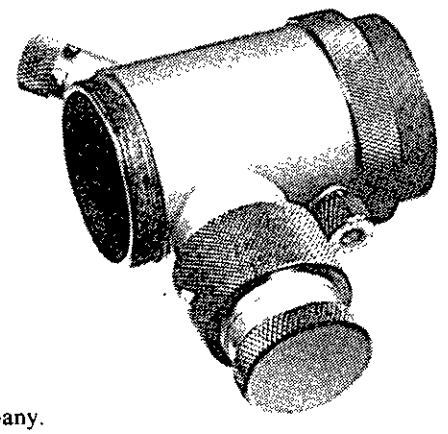

Courtesy of Brunson Instrument Company.

Figure 4-22. Combination Autocollimation, Projection, Right-Angle Eyepiece

Downloaded from http://www.everyspec.com

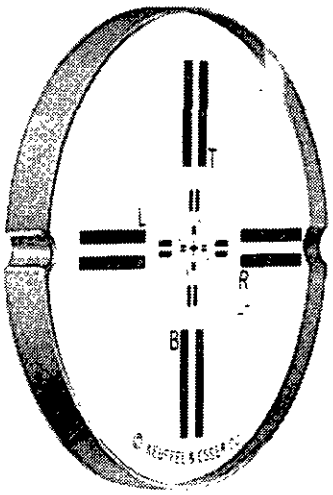

(A) Alignment

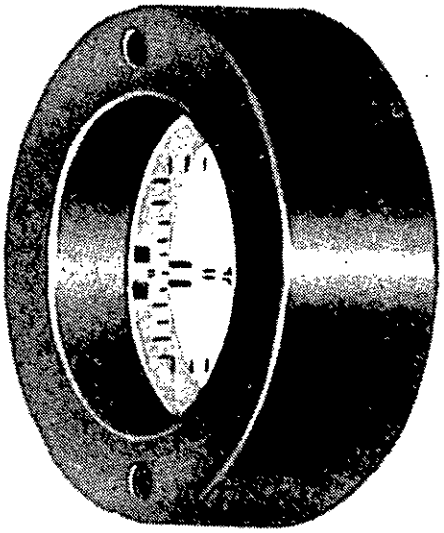

(B) Displacement

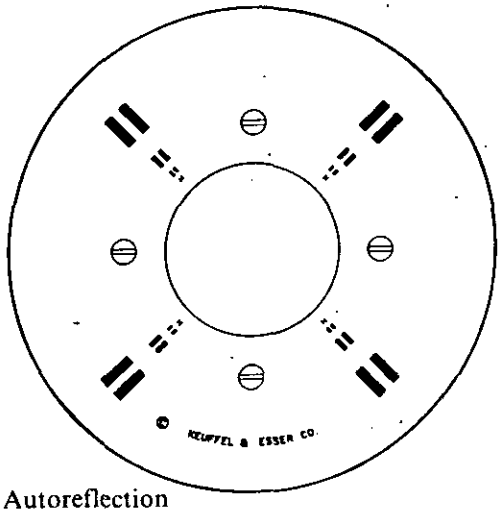

(C) Autoreflection

Courtesy of K+E Electro-Optical Products.

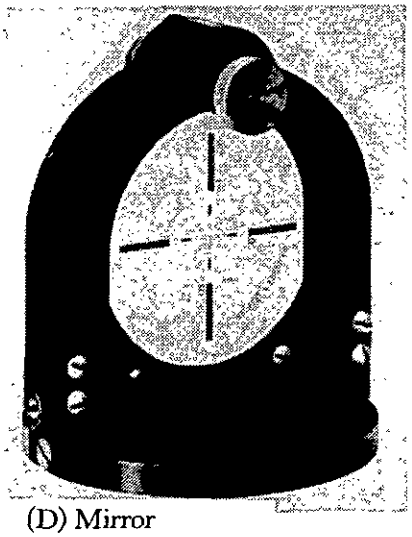

(D) Mirror

Figure 4-23. Targets

Optical tooling scales are used to make measurements in horizontal or vertical directions. As shown in Fig. 4-24, optical tooling scales comprise a series of paired line targets repeated at precise one-tenth-inch intervals. When observed through an instrument with an optical micrometer, tooling scales can be used to make measurements in thousandths of an inch. Optical tooling scale extensions can be used for measurement between two objects, long measurements, or other measurements not suitable for optical tooling scales, (Ref. 6). As Fig. 4-25 indicates, these extensions consist of a set of 1-in.-diameter bars in protective sleeves that are designed to be screwed together to make long measurements. A standard kit contains four 20-in.-long; two 10-in.-long; and two 5-in.-long bars. Optical tooling tapes often are used to make precision measurements over distances ranging from 20 to several hundred feet. The tapes consist of ⅜-in.-wide strips of steel or aluminum, and the working surface is graduated in 10-in. intervals.

Downloaded from http://www.everyspec.com

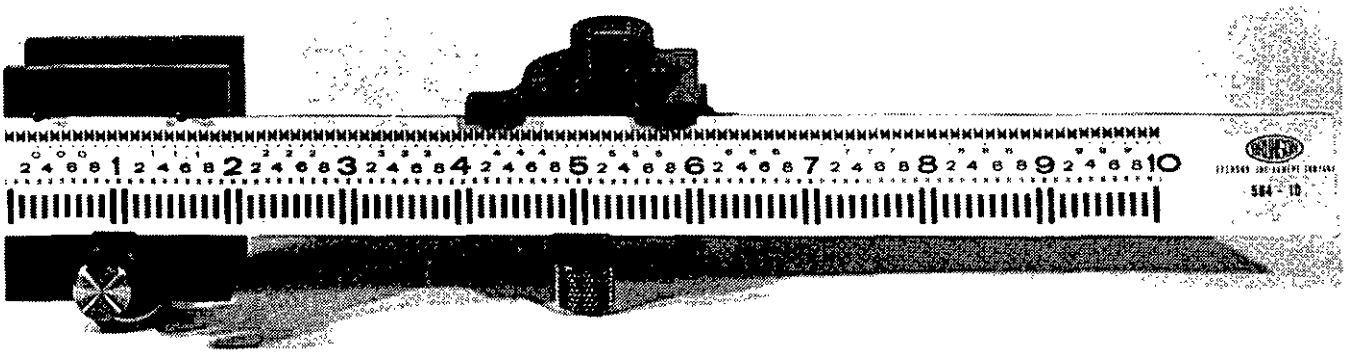

Courtesy of Brunson Instrument Company.

Figure 4-24. Typical Optical Tooling Scales

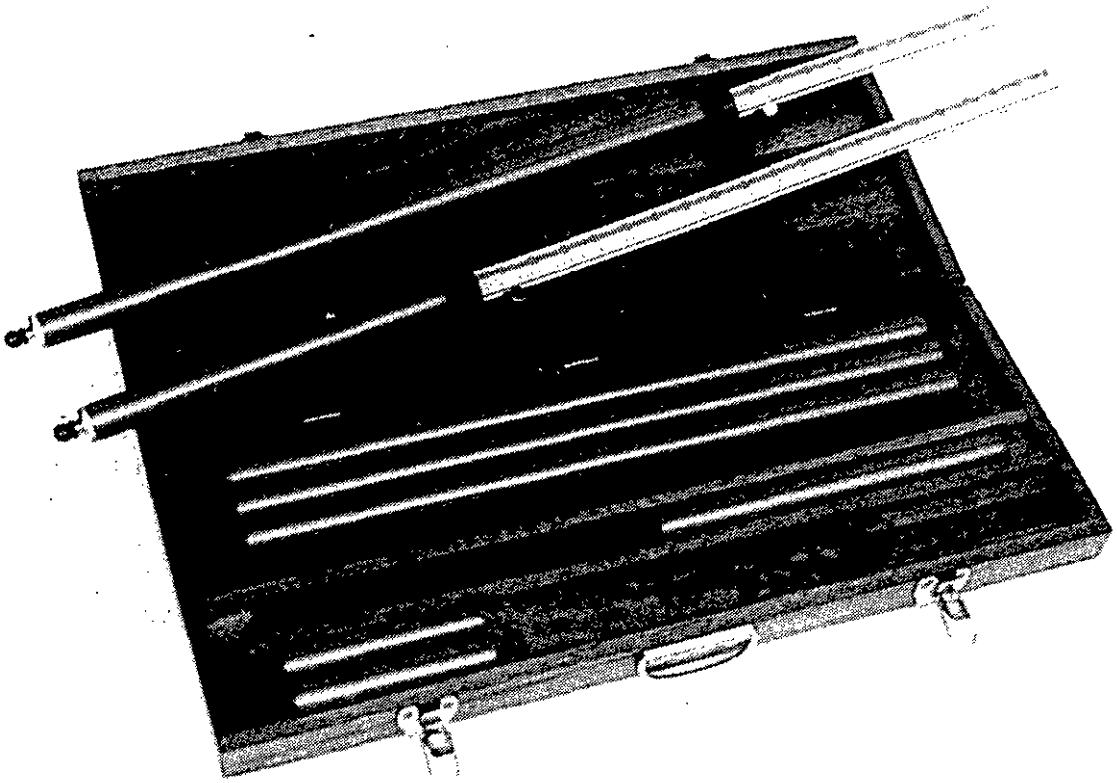

Courtesy of Brunson Instrument Company.

Figure 4-25. Optical Tooling Scale Extension Kit

Optical tooling instruments are supported by instrument stands and tooling bars. Instrument stands provide rigid support for optical tooling instruments. Fig. 4-26 shows an instrument stand with lateral slide-on casters. Tooling bars provide a means for measuring linear distances ranging from a fraction of an inch to 100 ft and more. The horizontal tooling bar, shown in Fig. 4-27, provides a means for placing an instrument along a line of sight. This placement establishes a plane perpendicular to the line of sight. Distances along the bar usually are measured by micrometer bars, a gage bar, or an optical tooling tape. A vernier attached to the carriage slides along the scales and permits horizontal placement of the instrument to 0.001-in. accuracy. The vertical tooling bar, shown in Fig. 4-28, is constructed and used in almost the same way as is the horizontal tooling bar. Measurements are taken in the same manner, to an accuracy of 0.001 in.

The striding level, shown in Fig. 4-29, is used for especially accurate work. It clips onto the collars of the telescope axle and is used to level the telescope with an accuracy to within 1 sec.

Downloaded from http://www.everyspec.com

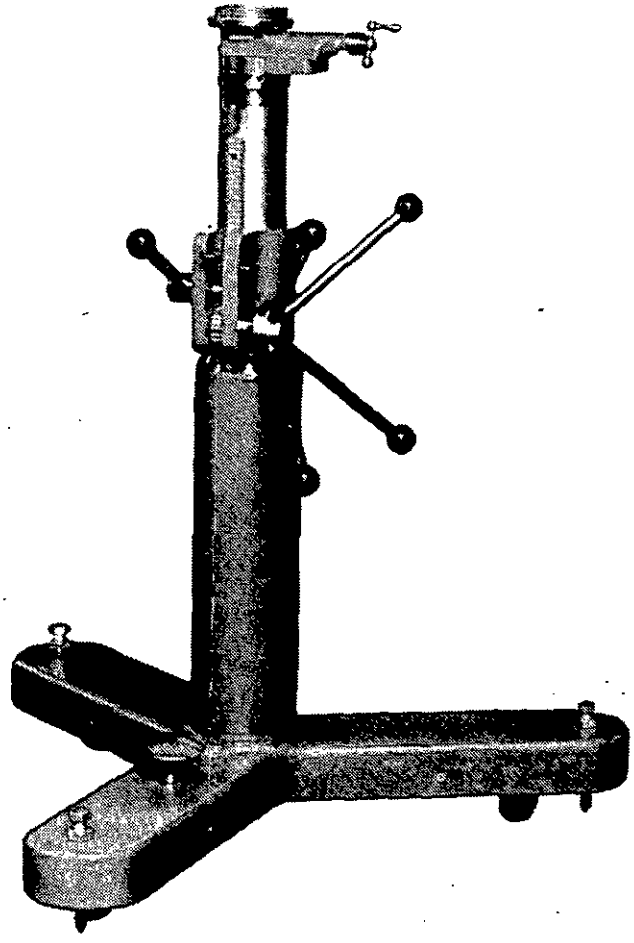

Courtesy of Brunson Instrument Company.

Figure 4-26. Instrument Stand

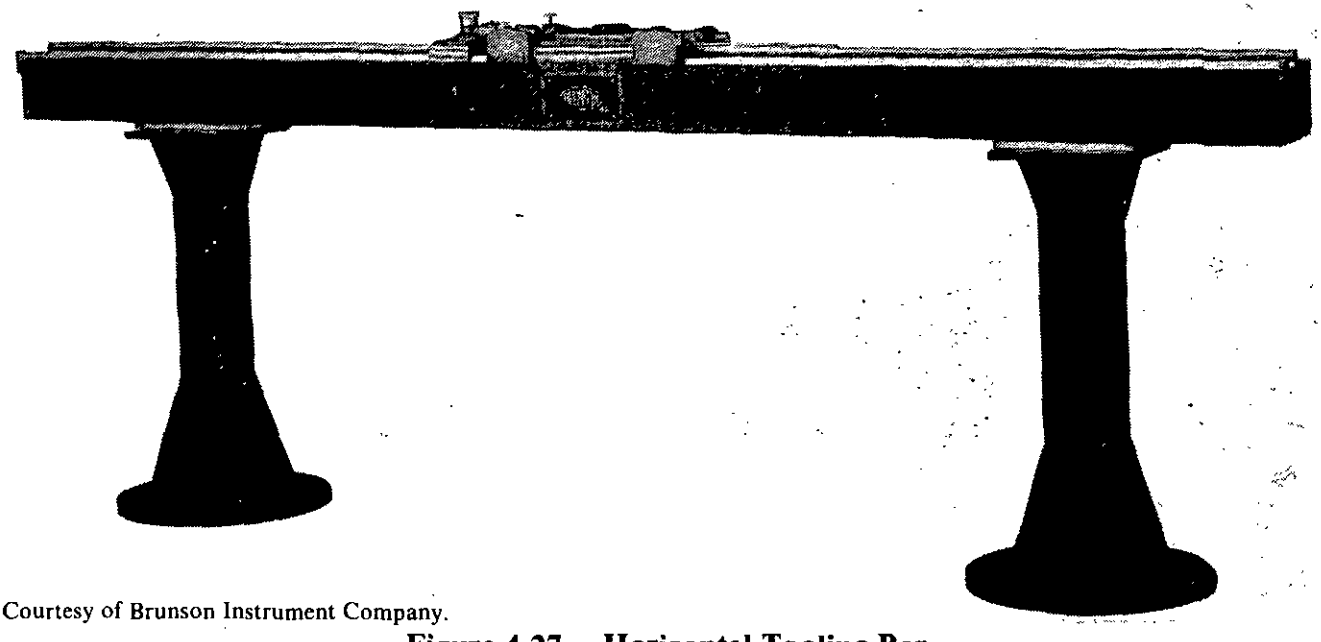

Courtesy of Brunson Instrument Company.

Figure 4-27. Horizontal Tooling Bar

Downloaded from http://www.everyspec.com

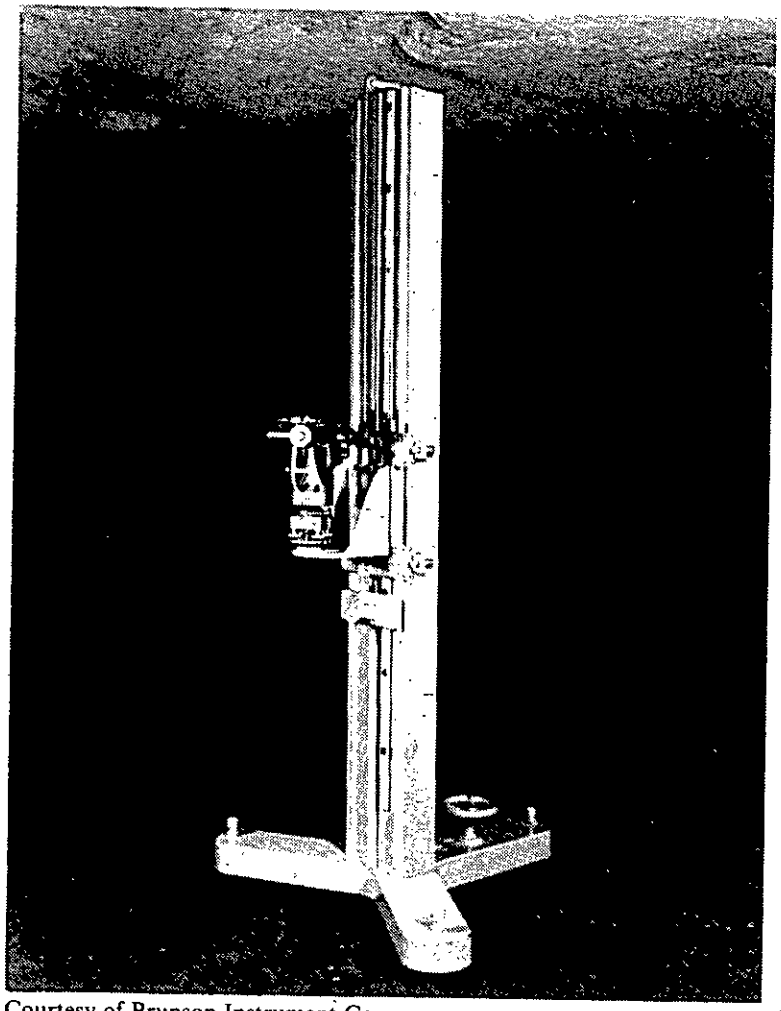

Courtesy of Brunson Instrument Company.

Figure 4-28. Vertical Tooling Bar

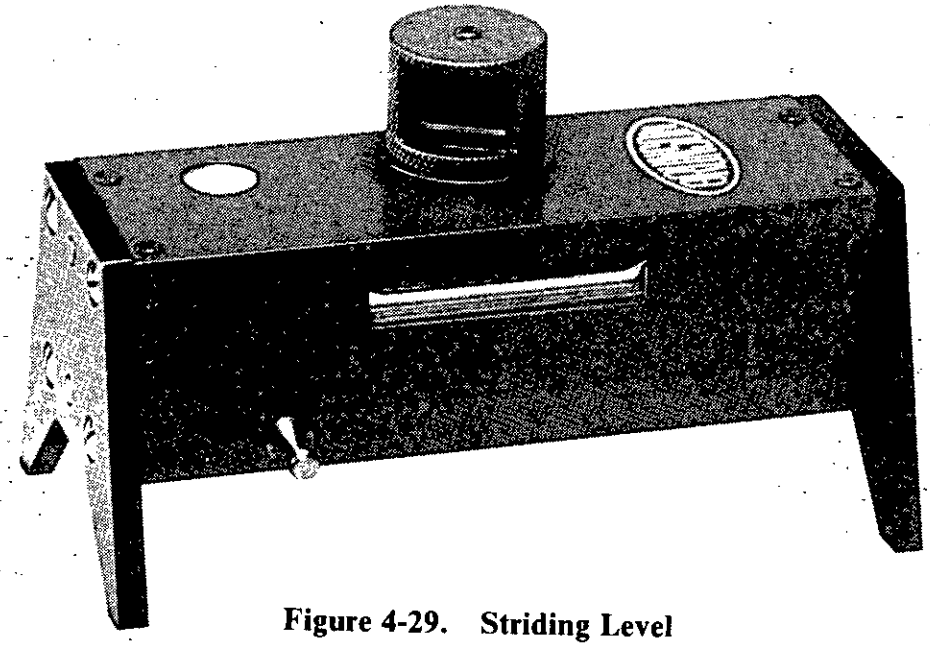

Figure 4-29. Striding Level

Courtesy of Brunson Instrument Company.

Downloaded from http://www.everyspec.com

4.2.3 AUTOMATIC AND PHOTOELECTRIC ALIGNMENT INSTRUMENTS

The characteristic that distinguishes automatic and photoelectric alignment instruments from manual instruments is the ability of the automatic and photoelectric instruments to generate an electric signal that indicates alignment error (Ref. 5). An automatic alignment instrument must be capable of sensing an alignment error of some minimum magnitude. The optoelectronic system for accomplishing this consists of (Ref. 5).

1. A means for transmitting coded light between the alignment instrument and body
2. An element on the body to modify the coded light so the magnitude and direction of misalignment are indicated
3. A means for developing an optical error signal from the reflected light received by the alignment instrument
4. A detector to convert the optical error signal to an electrical signal that can be processed conveniently.

4.2.3.1 Automatic Autocollimator

The automatic autocollimator measures the angle of displacement of an object from axes normal to the line of sight. Only the automatic autocollimator and the automatic alignment telescope can be used to measure alignment in two axes. Fig. 4-30 is a functional diagram for the two-axis autocollimator (Ref. 5). The y-axis is normal to the page, and the y-detectors are not shown.

In the automatic autocollimator, radiant power detectors are used to monitor the amount of light reflected back to the reticle plane. An autocollimated image lateral displacement causes an imbalance of light to fall on opposing detectors. The magnitude of the imbalance indicates the amount of displacement, and the polarity of the signals indicates the displacement direction.

The automatic autocollimator is used to determine accurately straightness, flatness, and small linear displacements and is ideally suited for short-range work. Operating distance is limited to 10 to 30 ft, depending on the instrument.

To obtain optimal performance, the automatic autocollimator aperture should be at least 2 in. in diameter; an autocollimating mirror of high reflectivity at least as large as the automatic autocollimator aperture should be used; and there should be no significant mirror translation, a relatively small ambient temperature variation along the entire optical path, insignificant external light, and no significant shock or vibration. In addition, the

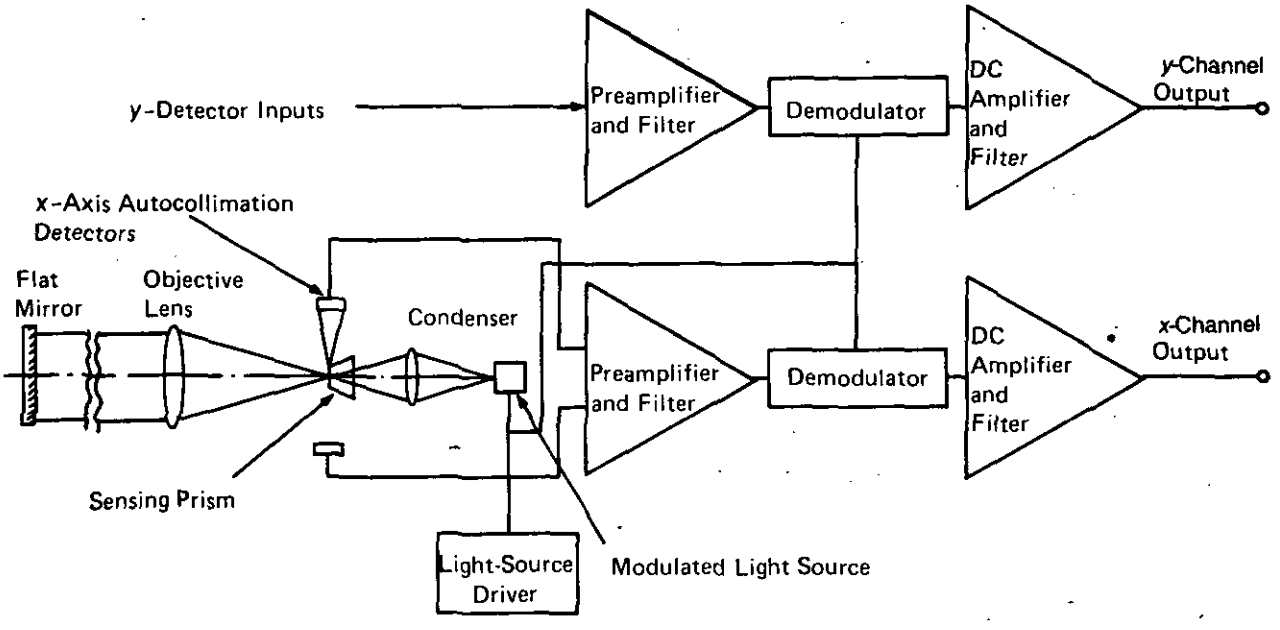

From *Handbook of Optics* edited by W. G. Driscoll. Copyright © by McGraw-Hill Book Company, 1978.

Figure 4-30. Functional Diagram for Two-Axis Automatic Autocollimator

Downloaded from http://www.everyspec.com

instrument should have a sensitivity of at least 0.02 sec, a signal bandwidth of less than 10 Hz, an angular acquisition range of 0.34 to 3.4 min, and a measuring accuracy of 0.1 to 1% of full scale (Ref. 5). If these conditions are attained, the normal performance limitation is air shimmer. Depending on air temperature variation and movement, optical path length, optical path enclosure, and signal bandwidth, limiting error resolution ranges from 0.0002 sec to 0.2 sec are attainable. Generally, a resolution of from 0.02 to 0.002 sec can be expected (Ref. 5).

The automatic autocollimator is capable of achieving a higher degree of accuracy and sensitivity than the manual autocollimator. Operator fatigue is reduced because only preliminary adjustments are made with the eyepiece. Another advantage is that the image displacement corresponding to a given tilt angle is independent of operating distance. In addition, continuous measurements of drift, tilt, twist, or platform movement can be made over a period of time, and the electronic signals from the power amplifier can be used to control a servo system. Maximum operating efficiency, however, is probably only achievable in a laboratory environment.

4.2.3.2 Automatic Alignment Telescope

The automatic alignment telescope measures the translation of a remote body normal to the line of sight. Fig. 4-31 illustrates the operating arrangement of a two-axis automatic alignment telescope (Ref. 5). As the figure shows, a trihedral retroreflector serves as the target on the monitored object. The reticle prism nose is focused on the trihedral, and when the trihedral is centered on the alignment telescope axis, the autoreflected image is superimposed on the nose. Lateral displacement of the monitored object causes the trihedral to move off the telescope axis, and the nose image correspondingly displaces laterally. Operation of the automatic alignment telescope is based on the straight-line propagation of light.

The automatic alignment telescope is identical to the automatic autocollimator except for the trihedral retroreflector. The automatic alignment telescope, however, is more limited in application than the automatic autocollimator for several reasons (Ref. 5). One reason is that body orientation is generally more significant than is lateral displacement from a line. Also because the autocollimator employs a collimated beam, it can be used over a wide range of distances without adjustment, whereas the alignment telescope must be refocused for each change in distance, which introduces a source of error. Furthermore, most automatic alignment telescope tasks can be performed by laser alignment systems or by automatic autocollimators focused on a trihedral.

The automatic alignment telescope has certain advantages relative to laser alignment devices (Ref. 5). All active optical and electronic functions are performed in the instrument, and it has a longer unattended life than laser alignment systems do and can achieve more precise alignment accuracy due to beam drift in lasers. Automatic alignment telescopes, however, are relatively uncommon; this is mainly because an automatic autocollimator can be used as an alignment telescope.

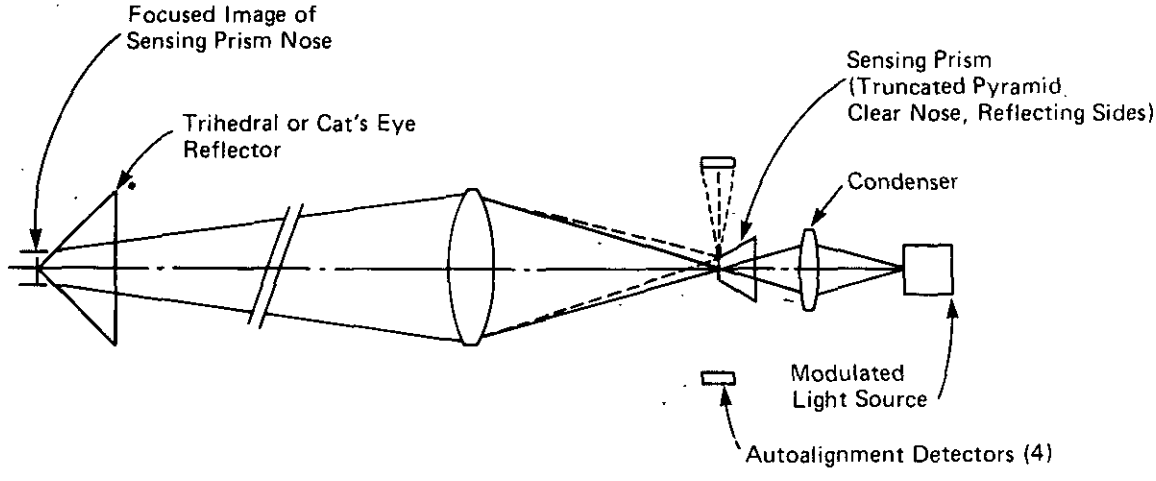

From *Handbook of Optics* edited by W. G. Driscoll. Copyright © by McGraw-Hill Book Company, 1978.

Figure 4-31. Operating Arrangement of Two-Axis Automatic Alignment Telescope

Downloaded from http://www.everyspec.com

To attain optimal performance, the conditions discussed in par. 4.2.3.1 for the automatic autocollimator must be met (Ref. 5). Expected performance falls within the same range of 0.02 to 0.2 sec (10^{-7} to 10^{-6} in. resolution at 1.1 yd). Air shimmer is commonly the performance-limiting factor (Ref. 5).

4.2.3.3 Automatic Alignment Polarimeter

The automatic alignment polarimeter measures body rotation about the line of sight. Its operation depends on the polarization property of light and is basically independent of image quality and straight-line propagation (Ref. 5).

The automatic alignment polarimeter consists of a polarizing transmitter on the observed body and a receiver. The operating arrangement is illustrated in Fig. 4-32 (Ref. 5). The polarizing transmitter is composed of a light source, collimating lens, coding polarizer, and polarizing modulator. The receiver is composed of an analyzing polarizer, condenser, and detector. When the polarizing direction is orthogonal to the coding polarizer, the analyzing polarizer rejects almost all of the incident light. As the polarizers depart from orthogonality, small amounts of light are transmitted. The quantity of transmitted light is a function of the rotation about the line of sight of the source of polarized light, i.e., the body being observed. The transmitted light is collected by the condenser lens and focused on the detector.

The polarizers are the most critical elements in the automatic alignment polarimeter. Requirements for the polarizers include linear polarization with a very low extinction coefficient, high transmission in the spectral range of interest, and good stability. Although expensive and fragile, natural crystal polarizing materials—such as calcite—give the best results (Ref. 5).

Normal automatic alignment polarimeter operation should conform to the optimal performance conditions discussed in par. 4.2.3.1 for the automatic autocollimator. If these conditions are achieved, performance is limited by photoelectron noise from 0.1 to 1 μrad error resolution provided the receiver polarizer is well aligned about the other axes normal to the line of sight (Ref. 5).

Alignment polarimeter performance is not affected adversely by air shimmer, but it is extremely sensitive to refractive and reflective optics in the optical path. Moreover, beyond normal operating distances the plane of polarization can be rotated by several μrad due to the effects of the earth's and other magnetic fields (Ref. 5).

4.2.3.4 Autocollimator Plus Alignment Polarimeter

As illustrated in Fig. 4-33, the autocollimator plus alignment polarimeter combines tilt- and twist-measuring techniques in a single instrument (Ref. 5). The instrument measures the total angular deviation of a body in terms of its components about the line of sight and two orthogonal axes normal to the line of sight. Automatic autocollimator and automatic alignment polarimeter techniques are combined by superimposing polarization and polarization modulation directly on a two-axis automatic autocollimator while not affecting its autocollimating operation (Ref. 5).

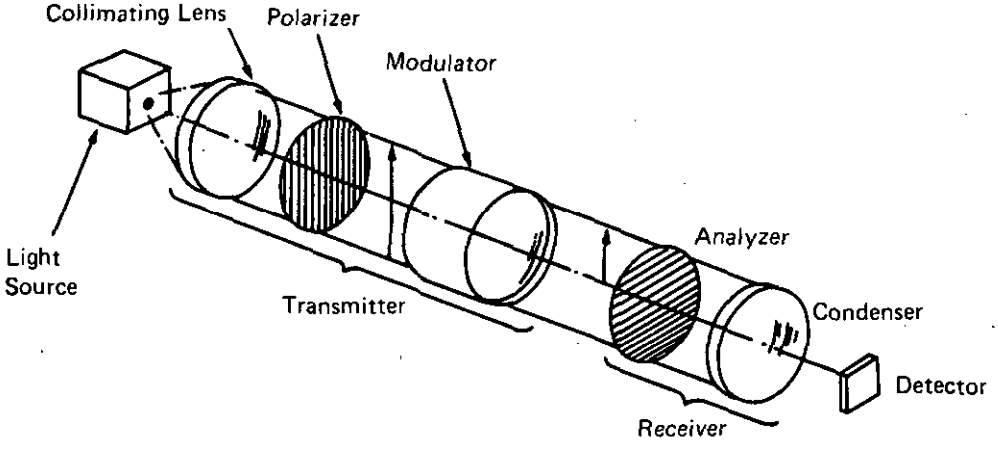

From *Handbook of Optics* edited by W. G. Driscoll. Copyright © by McGraw-Hill Book Company, 1978.

Figure 4-32. Operating Arrangement of Alignment Polarimeter

Downloaded from http://www.everyspec.com

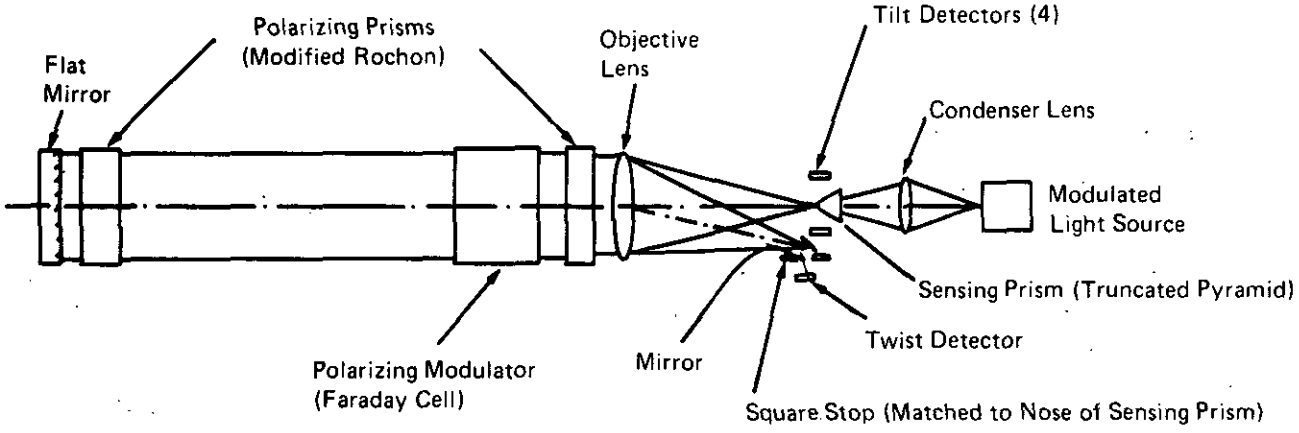

From *Handbook of Optics* edited by W. G. Driscoll. Copyright © by McGraw-Hill Book Company, 1978.

Figure 4-33. Operating Arrangement of Three-Axis Autocollimator-Polarimeter

The automatic autocollimator operates exactly as described previously, except for the polarization modulation in the collimated beam, which does not significantly affect the autocollimator.

The single-ended alignment polarimeter uses polarizing prisms that transmit two directions of polarization—one on-axis and the other several degrees off-axis. The axially collimated beam is initially polarized, the direction of polarization is oscillated by the polarizing modulator, and the beam is transmitted through the polarizer at the body. After the light is reflected back through the body polarizer, it is axially directed, linearly polarized in the direction of the body polarizer, and practically unmodulated. The plane of polarization is again oscillated as it passes through the polarizing modulator. Most of the light, containing tilt information from the autocollimating mirror, passes axially through the alignment polarimeter polarizer. Autocollimator detectors at the sensing prism detect this light. The alignment polarimeter polarizing prism diverts the small orthogonal polarized component introduced by the polarizing modulator and twist misalignment to an off-axis image point in the focal plane. The diverted component that contains twist information is detected by the alignment polarimeter detector (Ref. 5).

Normal autocollimator plus alignment polarimeter operation is constrained by the same optimal conditions discussed for the automatic autocollimator in par. 4.2.3.1. Expected performance also falls within the same range.

4.2.3.5 Laser Range Finder

The laser range finder measures the distance to a body, based on the round-trip transit time of light. The measurement is made either by gaging the actual transit time of optical pulses or by determining the number of radio-frequency-modulated light wavelengths between the instrument and the body. Fig. 4-34 is a schematic diagram of a laser range finder (Ref. 5).

To attain the highest level of accuracy, a retroreflector should be used as a target, although good results can be obtained from diffuse surface reflection by the use of powerful instruments. The most straightforward type of range finder employs unipulse range measurement. A single light pulse is transmitted to the object and turns on a high-speed counter as it departs. The reflected pulse turns off the counter, and the distance to the body is proportional to the number of accumulated counts.

The velocity of light is known to an accuracy of about 1 part in 10^6 parts. Therefore, the maximum specific measuring accuracy of the laser range finder is 1 part in 10^6 parts. This accuracy can be maintained for distances from a few miles up to at least 60 miles. Because of the use of a laser source, performance should not be affected adversely by extraneous light during the day. Component or photon noise can limit performance, but this limitation can be overcome through use of a powerful laser source combined with appropriately large optics (Ref. 5).

Downloaded from http://www.everyspec.com

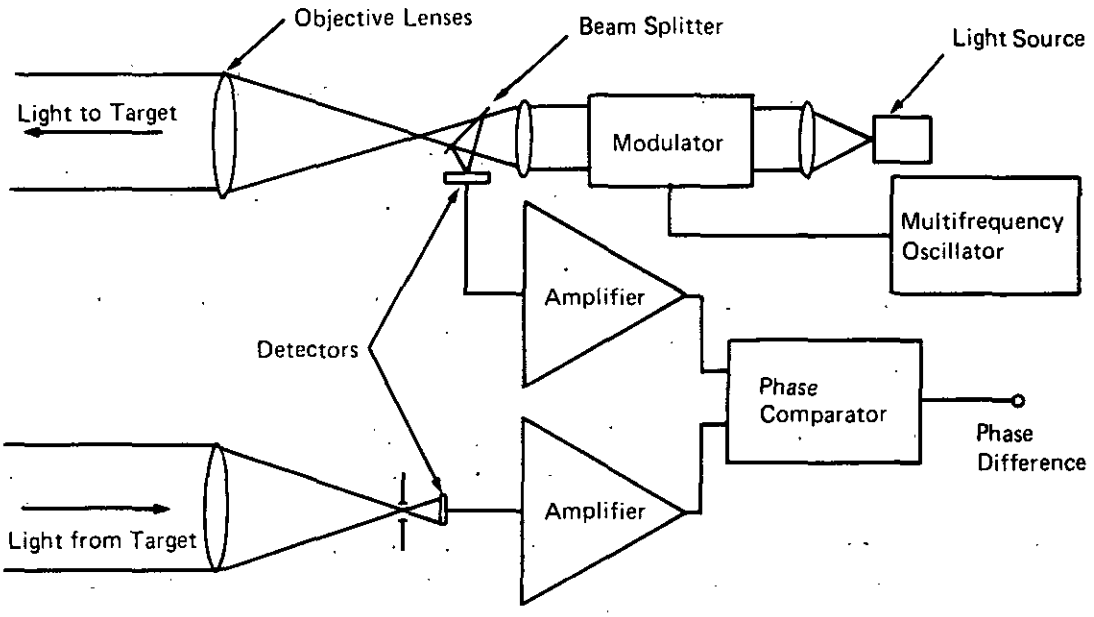

From *Handbook of Optics* edited by W. G. Driscoll. Copyright © by McGraw-Hill Book Company, 1978.

Figure 4-34. Schematic Diagram of Optical Range Finder

4.2.3.6 Automatic Optical Probe

The automatic optical probe uses triangulation techniques to measure very small changes in distance—normally << 1 yd—to a nearby body (Ref. 5). Operation of the optical probe depends on the straight-line propagation of light and its short wavelength. Fig. 4-35 illustrates the operating arrangement of the optical probe (Ref. 5).

In operation the converging beams of the automatic optical probe are focused on the object. As the object moves toward or away from the optical probe, the beams separate laterally and in opposite directions. Two detectors are arranged to discern the imbalance in reflected light resulting from beam separation. The difference in detector output indicates the magnitude of object movement.

The automatic optical probe has a specific accuracy of about 1%. It has the advantage over most noncontacting sensors of requiring an extremely small reflecting area—0.004 in. or less in diameter—on the observed object from a distance of several inches (Ref. 5).

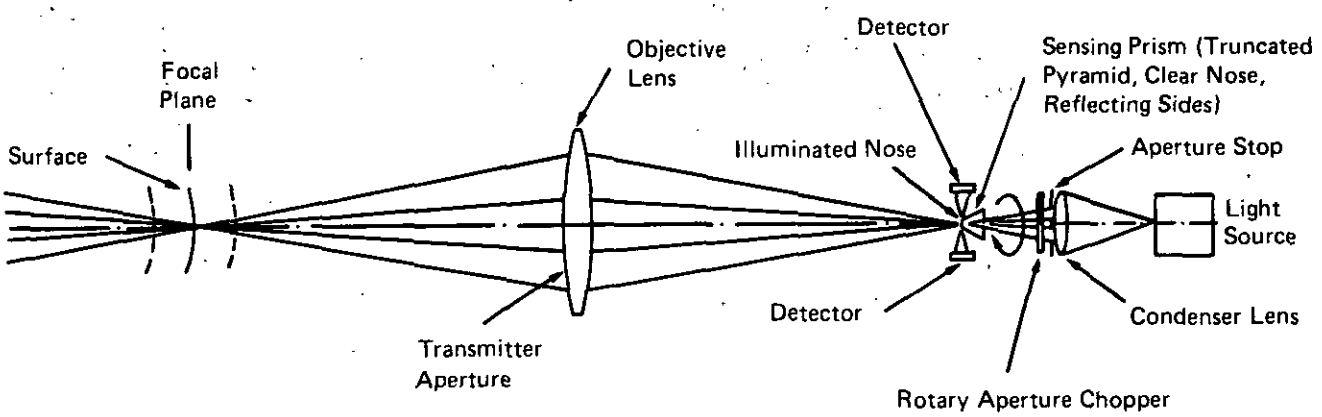

From *Handbook of Optics* edited by W. G. Driscoll. Copyright © by McGraw-Hill Book Company, 1978.

Figure 4-35. Operating Arrangement of Optical Probe

Downloaded from http://www.everyspec.com

4.2.3.7 Laser Alignment System

The laser alignment system shown in Fig. 4-36 serves the same function as does the alignment telescope. The visible beam of light takes the place of the alignment telescope line of sight. The laser alignment device consists of a continuous discharge laser—normally helium-neon (He-Ne)—mounted in a heavy-walled steel cylinder finished to 2.25 in. (adaptable to standard optical tooling mounts). The operating system includes a target with photodiode detection for readout or feedback. Auxiliary equipment includes the laser power supply, two displacement readout units, a calibration plate, and a finder screen.

Laser alignment system applications are the same as those for alignment telescopes. The accuracy of the laser alignment system is such that it can theoretically measure to 0.0025 in. at 200 ft (Ref. 5). In addition to being more accurate than the alignment telescope, the laser alignment device is rugged in hostile environments, and the He-Ne laser has a long life.

4.2.4 INTERFEROMETRIC METROLOGY INSTRUMENTS

Interferometers traditionally have been classified by two methods: the number of interfering beams and the method of beam separation. For this handbook, however, interferometers are classified by three functions: distance measurement, angular measurement, and optical component testing.

Dimensions in the range ordinarily measured by shop and machine tools can be measured by laser interferometric distance measuring systems (laser interferometers) (Ref. 5). Fig. 4-37 is a schematic of such a system. Laser interferometers operate principally on the phenomenon of light-wave interference. Light waves are a useful measurement tool because they constitute the smallest unit of measurement used in metrology and as such are capable of the most accurate length definition known. Because of the effects of ambient atmosphere on the wavelength and the effects of temperature on materials and structures, compensation factors must be applied either manually, or automatically. Each laser interferometric distance measuring system is unique (Ref. 5).

Laser interferometers are used specifically to evaluate positioning accuracy of machine tools and measuring machines, to calibrate positioning systems and secondary length standards, and to function as linear-displacement transducers in machine tools and measuring machines.

The basic accuracy of the laser interferometer is $\pm(1\ \mu\text{in./in.} + 3\ \mu\text{in.})$ over distances up to 150 ft in industrial shop environments. Because of the stability of single-frequency laser sources, accuracies in the range of 1 part

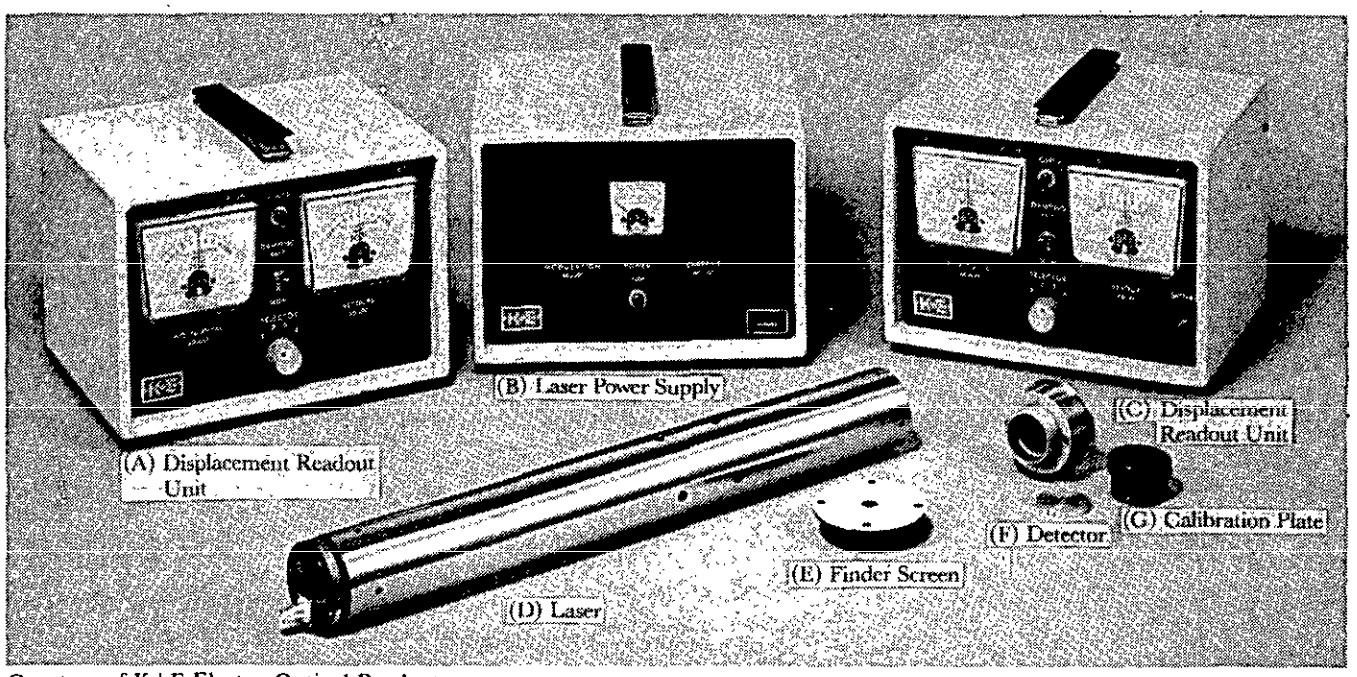

Courtesy of K+E Electro-Optical Products.

Figure 4-36. Laser Alignment System

Downloaded from http://www.everyspec.com

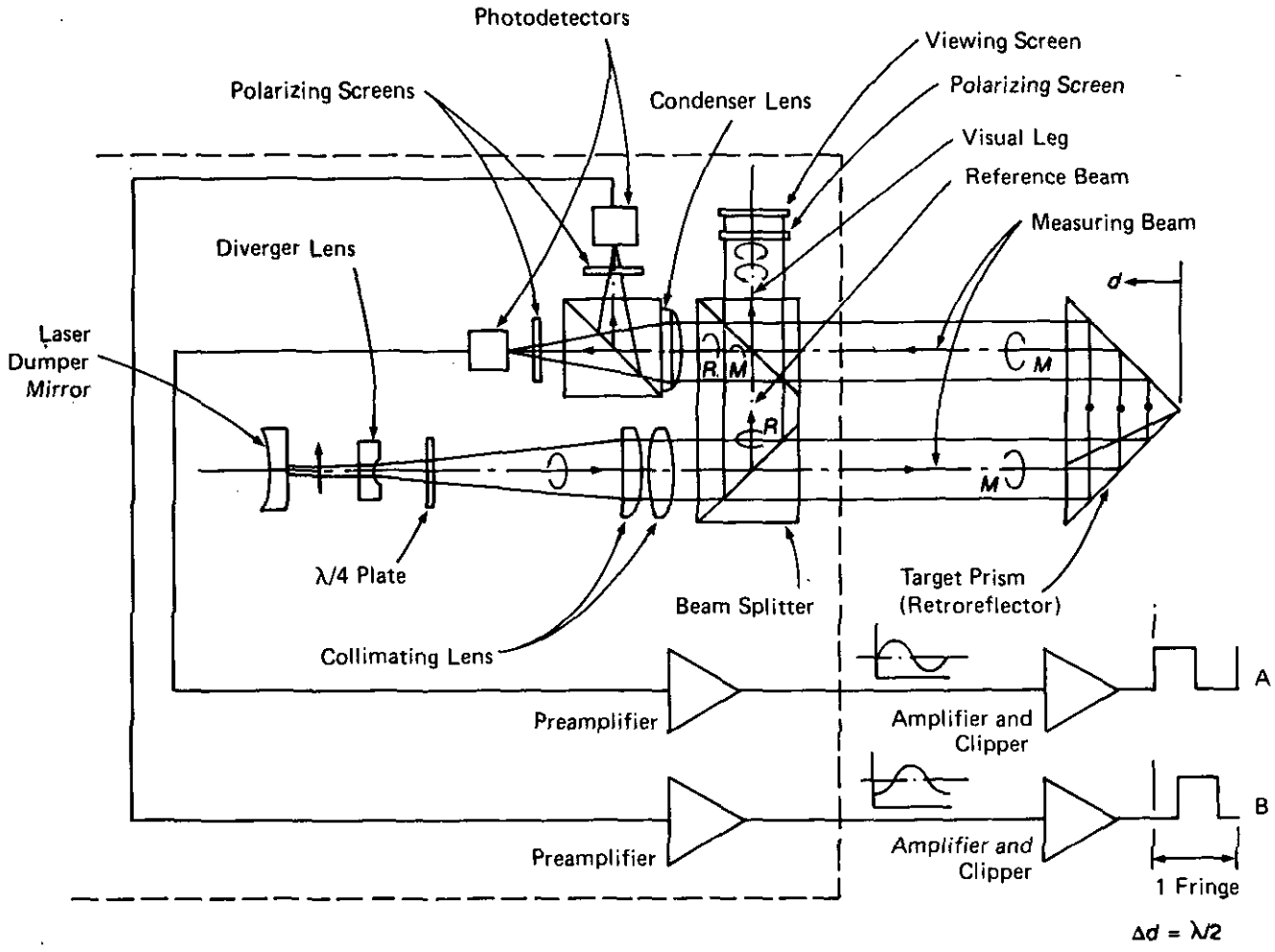

Used with permission of The Perkin-Elmer Corporation, Norwalk, CT.

d = target distance
M = measuring beam
R = reference beam

Figure 4-37. Schematic of Laser Interferometer

in 10^6 to nearly 1 part in 10^7 can be achieved. The measuring environment, however, must be stable, and material or machine temperature must be held close to the standard 68° F to achieve such accuracies (Ref. 5).

Angles as small as 0.02 sec can be measured with a pointing interferometer (Ref. 5), as illustrated in Fig. 4-38. Interferometers are generally very sensitive to vibrations; however, with the interfering paths parallel, vibration tends to affect the arms equally, which reduces the problem.

The pointing interferometer exceeds the accuracy and sensitivity of the autocollimator and may be used in most autocollimator applications. Additionally, because it is sensitive to changes in the length of the light path of one beam relative to another, it can be used to measure differences in refractive index, absolute refractive index, thickness of thin films, sphericity of ball bearings, and other mechanical properties (Ref. 5).

The pointing interferometer is inherently accurate because of the stability of the wavelength of mercury light—the monochromatic light source. For a measurement of 40 min from the zero-order fringe, the angle error would be 0.005% (Ref. 5). The accuracy of the pointing interferometer, however, is subject to the changes in the refractive index of air due to changes in humidity, pressure, or temperature; therefore, the air path should be kept as short as possible. It may be desirable or even necessary to enclose the air path if the environment cannot be carefully controlled (Ref. 5).

The testing of optical components is one of the principal uses of interferometry. The oldest and most common form of interferometry is the observation of Newton's fringes between a surface being fabricated and an optical test plate. Differences between the test object and test plate appear as fringes of equal thickness. For

Downloaded from http://www.everyspec.com

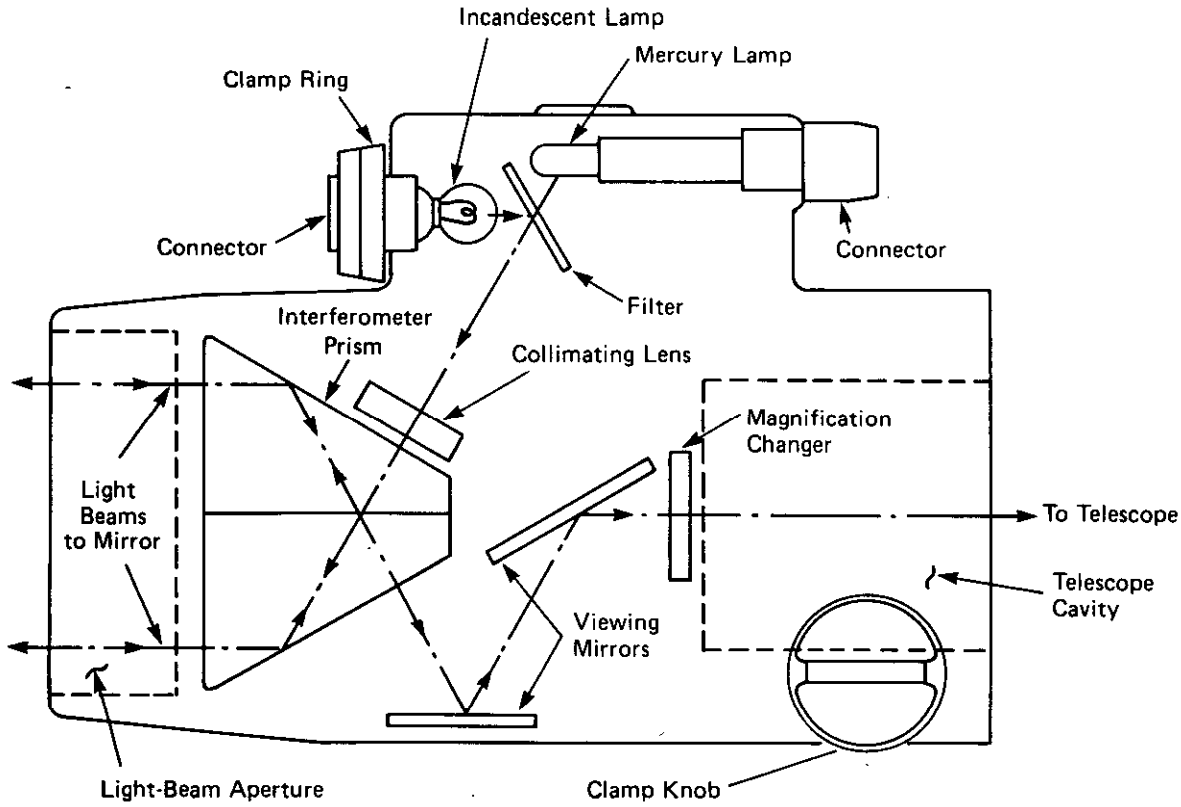

Used with permission of Kollmorgen Corporation, Northampton, MA.

Figure 4-38. Pointing Interferometer

two adjacent, normal fringes the departure between the surfaces being compared is $\lambda/2$, where λ is the wavelength of the light used in the test.

Two factors limit the use of test plates to test optical components: (1) the test surface is subject to damage through contact with the test plate and (2) a different test plate must be used for each radius of curvature. These problems can, however, be overcome through the use of the interferometer systems for optical testing.

Interferometer systems are available that can be configured in a variety of ways simply by setting up the appropriate accessories. Fig. 4-39 shows one such system that is capable of evaluating specular plano, spherical, cylindrical, or aspheric surfaces in reflection or elements or systems in transmission. The nucleus of this system is the mainframe, which is composed of a laser and its power supply, a spatial filter-beam diverger, a collimating objective, a video camera, a video monitor, zoom optics, aperture focusing optics, an automatic alignment system, and a fringe acquisition system.

The field-replaceable laser head is an He-Ne laser. The interferometer output is a fringe pattern that can be viewed on a low-distortion video monitor and simultaneously recorded on film. The ability to focus the aperture on the article under test is an integral part of the mainframe because it eliminates fringe distortion induced by Fresnel diffraction at the edge of the aperture. The automatic alignment system aligns accessory transmission elements with the optical axis of the mainframe. The fringe acquisition system is designed so that the article under test can be aligned to produce fringes in a matter of seconds.

The basic accuracy of the interferometer system is $\lambda/20$ for plano testing, $\lambda/10$ for spherical testing, and $\lambda/4$ for cylindrical testing over the clear aperture ($\lambda = 0.053\ \mu m$ for the He-Ne system).

Options and accessories available include

1. Large aperture (12-, 18-, 24-, and 32-in.) or small aperture (0.5 in.) systems
2. Transmission spheres with various F/numbers in 1.3-, 4-, and 6-in. aperture diameters.

Transmission spheres are beam splitters that produce a reflected reference wave front and a transmitted measurement wave front.

Downloaded from http://www.everyspec.com

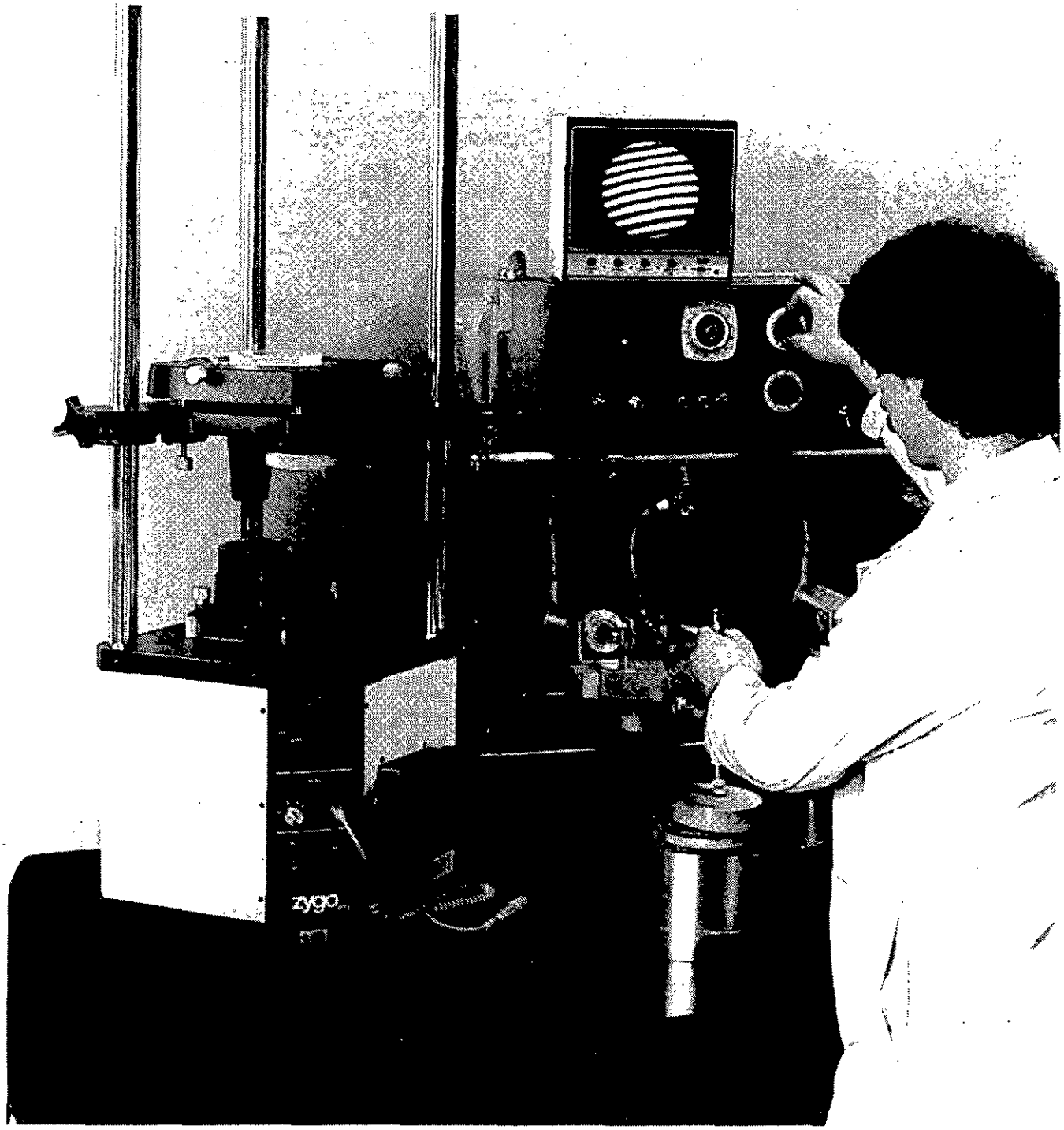

Courtesy of Zygo Corporation.

Figure 4-39. Interferometer System

3. Transmission flats with 1.3- to 32-in. clear apertures and either 4 or 90% reflectivity on the beam splitter surface

4. Reference flats with 1.3- to 32-in. clear apertures and either 4 or 90% reflectivity on the reference surface

5. Reference spheres with either 0.51 or 0.68 R/numbers and either 4 or 90% reflectivity on the reference surface

6. Attenuation filters with 2-, 4-, or 6-in. aperture and mounts and stands and 12-, 18-, 24-, or 32-in.

Downloaded from http://www.everyspec.com

aperture attenuation screens with mounts and stands

7. Tables and pads that provide isolation from external sources of vibration
8. Various mounts for components and systems being tested
9. Radius scales for measuring the radius of curvature
10. Vertical slide with vertical measurement channel.

4.2.5 ELECTRO-OPTICAL INSTRUMENTS

Electro-optical instruments are particularly well suited for in-process gaging to achieve closed loop adaptive control of manufacturing processes. In general, electro-optical instruments are comprised of systems that may be described in terms of five interacting functional groups (Ref. 7):

1. *Microprocessor*. Controls, coordinates, and monitors operation of the entire system
2. *Data Encoder and Interface*. Compresses the raw data provided by the optics and passes it on to the microprocessor in a suitable format
3. *Optics and Electronic Image Transducers*. Basis of the noncontact measurement technique; the major source of raw measurement data
4. *Mechanical Articulation and Part Handling*. Comprised of the mechanisms that physically move the optics and/or the object being inspected while measurements are taken and also the sorting mechanisms that act on the outcome of the inspection procedure
5. *Operator Controls and Panel Display*. Allow the operator to interact directly with the microprocessor to direct instrument operation and data output.

The discussion of electro-optical instruments in this handbook will focus on the optics and image sensors employed, which affect applications and accuracy of measurements. The types of techniques covered include the fiber-optic probe, photodiode array, shadow projection, image dissector, and scanning laser beam. Each technique is discussed in the paragraphs that follow.

4.2.5.1 Fiber-Optic Probe

Fig. 4-40 is an illustration of the bifurcated fiber-optic probe (Ref. 7). Applications of the fiber-optic probe include vibration monitoring (amplitude, frequency response, wave shape, and nodal patterns), rotor dynamics (shaft vibration, displacement, bending under load, whirl characteristics, torque), and surface condition (flaws, texture, and finish). This probe is composed of numerous coated glass fibers randomly arrayed, layered, or otherwise arranged in the common end. At the bifurcation point, generally one-half of the fibers are brought to one useful leg and the other one half to a second useful leg. One set of fibers transmits light from the instrument to the target surface, and the second set of fibers returns reflected light to the instrument where it is converted to an electrical signal proportional to the gap between the probe face and the target surface. The instrument creates a response curve that graphically compares the amount of reflected light and the amount of displacement between the probe and the target surface. Fig. 4-41 illustrates a typical response curve generated as the common end of the probe is moved forward and away from the target surface (Ref. 8). The standoff distance for the peak of the curve is fixed for any given probe or probe configuration. The magnitude and sign of the peak represent the measured variable, but the position of the peak along the x-axis does not change.

Advantages of using fiber-optic probes include high sensitivity, noncontact measurements, application to either metallic or nonmetallic surfaces, small size probe diameter that enables sensing through a small access area, a sensing element not subject to and not causing magnetic or electrostatic disturbances, special probes that can withstand temperatures up to 600° F and that can operate in high pressure or a vacuum, in-process measurements, and speed of measurement. (The information signal is processed in milliseconds.) Fiber-optic probes are of limited use in machine shop environments because the articles being measured must be kept clean and dry. The "common" end of the probe also should be cleaned periodically (Ref. 8). In addition, the reflectivity of the target surface must be uniform.

The dimensional accuracy achievable is a function of detector amplification, source illumination, and material reflectivity. For example, consider a probe with a common end measuring 0.020 in. by 0.020 in., peaking at a standoff distance of 0.0045 in., and measuring ground steel. The voltage output peak is

Downloaded from http://www.everyspec.com

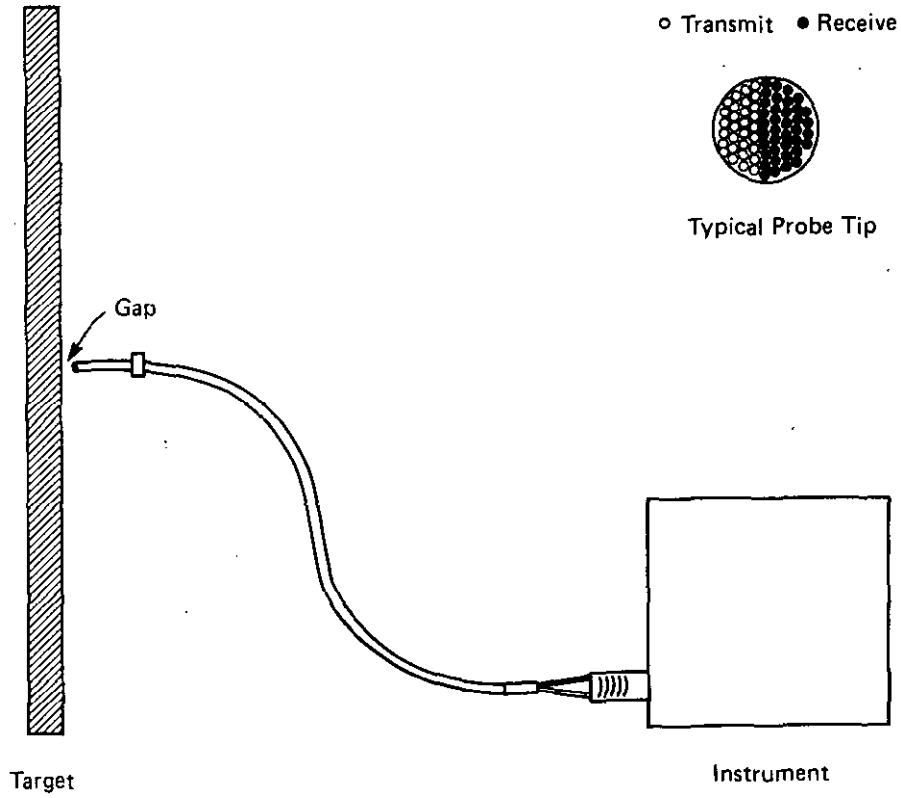

Figure 4-40. Bifurcated Fiber Optic Probe

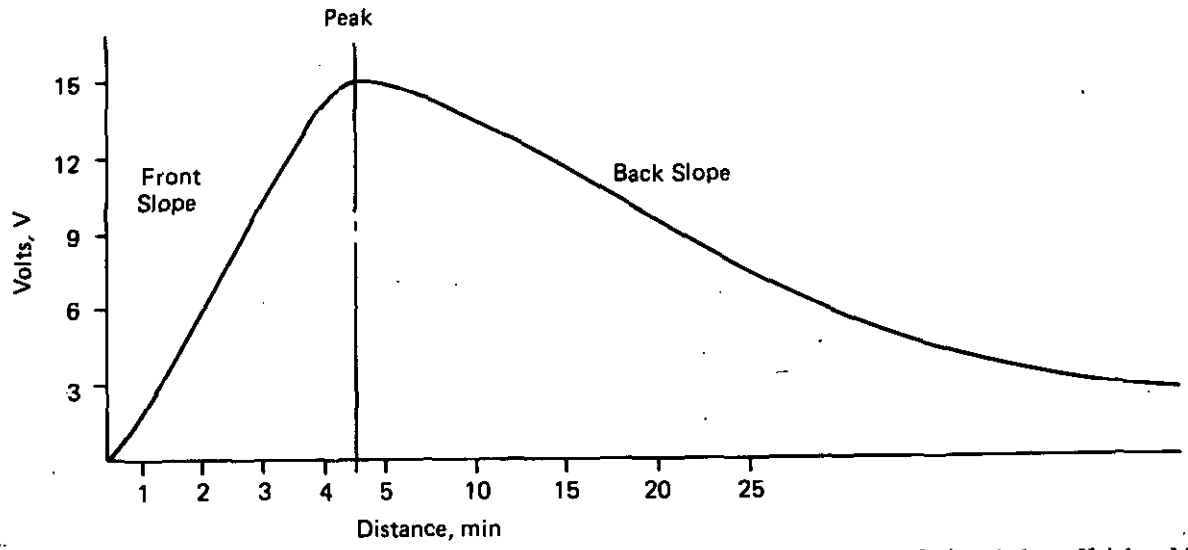

Used with permission of Elmer V. Harbert, Jr., VP Engineering, See-Tronics, Inc., 2750 Paldan Drive, Auburn Heights, MI 48057, and the Society of Photo-Optical Instrumentation Engineers, Bellingham, WA.

Figure 4-41. Characteristic Curve for 0.020-in. Probe

Downloaded from http://www.everyspec.com

approximately 15 V, as Fig. 4-41 illustrates. In the front slope of the curve, 1 mV corresponds to 0.2 μin. If a voltage readout accuracy of 0.1% is assumed, the standoff measurements of the front side of the curve can be defined to a precision of ±0.000002 in., or 2 μin. Analogously, for the back position of the curve, the same meter will yield an accuracy of any given reading over +16 μin. and thus facilitate dimensional readings in 0.0001 in. (Ref. 8).

4.2.5.2 Photodiode Array

Electro-optical systems that use photodiode arrays are well suited to gage small parts. The position of each photodiode is known within a few microinches. Each photodiode is interrogated by a synchronous clock, so no loss of positional accuracy occurs during readout. Because it functions as an electronically clocked interrogation of spatially discrete detectors, it interfaces naturally with a digital processor. Both linear and matrix arrays are available to offer a wide choice of resolution and sensitivity. Densities range from 16 elements on 0.016-in. centers to 1872 elements on 0.0006-in. centers (Ref. 9).

Electro-optical instruments that use photodiode arrays can be applied in the area of industrial control and process quality assurance for the noncontact measurement of size, shape, and position. These instruments can be used to gage shapes and features not easily accessible by conventional measurement instruments, allow for the more thorough inspection of larger sample batches in quality control audits, increase throughput in on-line inspection situations while reducing escapes, reduce quality control personnel requirements, and form the basis for a closed loop production process. Photodiode arrays, however, are limited to the measurement of objects that do not move about more than a fraction of an inch and to dimensions of fractions of inches (Ref. 10).

4.2.5.3 Image Dissector

Fig. 4-42 shows an electro-optical system that employs an image dissector. Electro-optical systems that use image dissectors are particularly suited for applications that require high-speed, precision-accuracy measurement; sorting; and classification of parts. For example, these systems can be programmed to gage

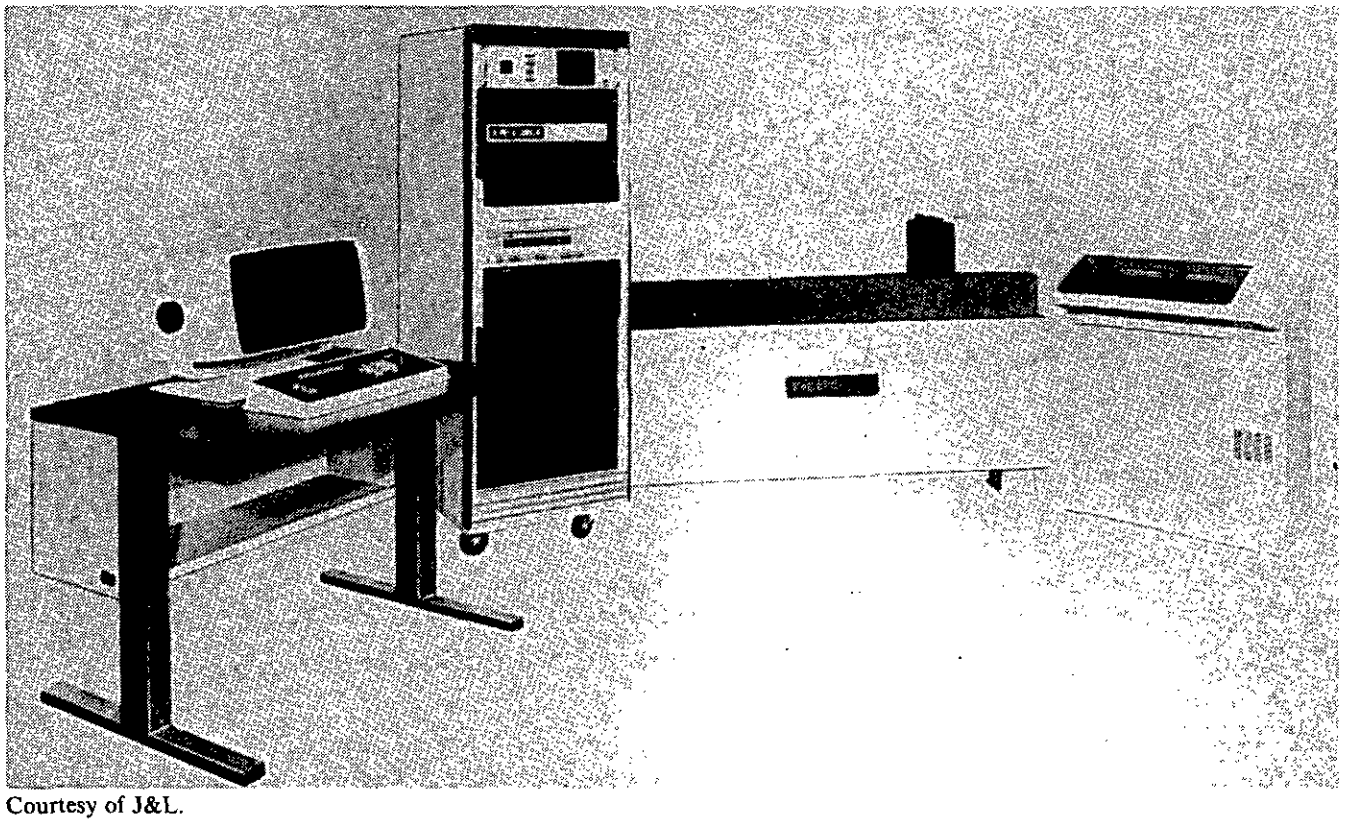

Courtesy of J&L.

Figure 4-42. Image Dissector Electro-Optical System

Downloaded from http://www.everyspec.com

printed circuit boards, microswitches, ball bearings, drills, taps, fuze parts, wire gages, spark plugs, fuel pump diaphragms, door latches, and microsurgical instruments.

When this type of electro-optical system is applied, the part to be gaged is placed in the staging area, either by hand or by an automatic handling system. Staging may consist simply of random placement on a glass plate or of loading a fixture. The part is backlit by collimated illumination from a parallel beam light projector, and the resulting shadow image is projected through the telecentric objective lens onto the image dissector tube. This tube is the only type of image analysis tube that permits random addressing of the position of the shadow image of the workpiece. The focused shadow image is broken down electronically into a corresponding photoelectron image. This image is then oriented electronically and measured against stored master part dimensional data or measured to absolute dimensions. The input terminal can be used to select the amount and form of output from various options. Output options include simple accept or reject lights, accept/rework/reject classification, printout of rejected or all dimensions, signals to adjust specific process equipment, or cathode ray tube (CRT) display of the part being measured.

Advantages of inspection systems that use image dissectors include reduction in personnel requirements; elimination of human judgment in inspection; establishment of process capability from data produced; and the economy of software flexibility, which limits the cost of hard gaging. Use of this type of system is limited to environments not subject to extreme temperature variation, appreciable vibration, and airborne pollutants or particles.

A representative, commercially available system, using proper linearization with a suitable grid master (recommended once a month), will attain the accuracy shown in Table 4-1.

TABLE 4-1. ACCURACY OF ELECTRO-OPTICAL SYSTEM EMPLOYING AN IMAGE DISSECTOR

	1:1 Lens	2:1 Reduction Lens
Field of view	1-in. *d**	2-in. *d**
Absolute accuracy	±0.0001 in.	±0.0002 in.
Repeatability	±0.0005 in.	±0.0001 in.

**d* = diameter

If maximum accuracy is not required, the system can be operated to produce the required measurements at a faster rate. Scan time for the accuracy in Table 4-1 is approximately 0.1 sec per measured point. The minimum scan time is 0.04 sec, at a reduced accuracy. Radii require three measured points; holes require six measured points.

Accessories include

1. Automatic loading with random or fixed-part orientation
2. Vertical projection for parts that can be inspected only with a vertical light beam
3. 2:1 reducing telecentric objective lens for parts that require a larger field of view (2-in. diameter) than the normal 1-in. diameter
4. Folded optics to view two different areas of the same workpiece simultaneously
5. High-speed printer
6. Options to input programs to the system, including high-speed paper tape readers, magnetic tape drives, and disc and diskette drives
7. Parametric programs that enable dimensions and their tolerances to be changed.

4.2.5.4 Scanning Laser Beams

Scanning laser beam systems such as the one shown in Fig. 4-43 can provide very accurate noncontact dimensional measurements of very small objects. The collimated, scanning laser beam moves at a high, constant, linear speed and appears as a line of red light. When an object is placed in the beam, it casts a precise shadow. The receiver collects and photoelectrically senses the laser light transmitted past the object being

Downloaded from http://www.everyspec.com

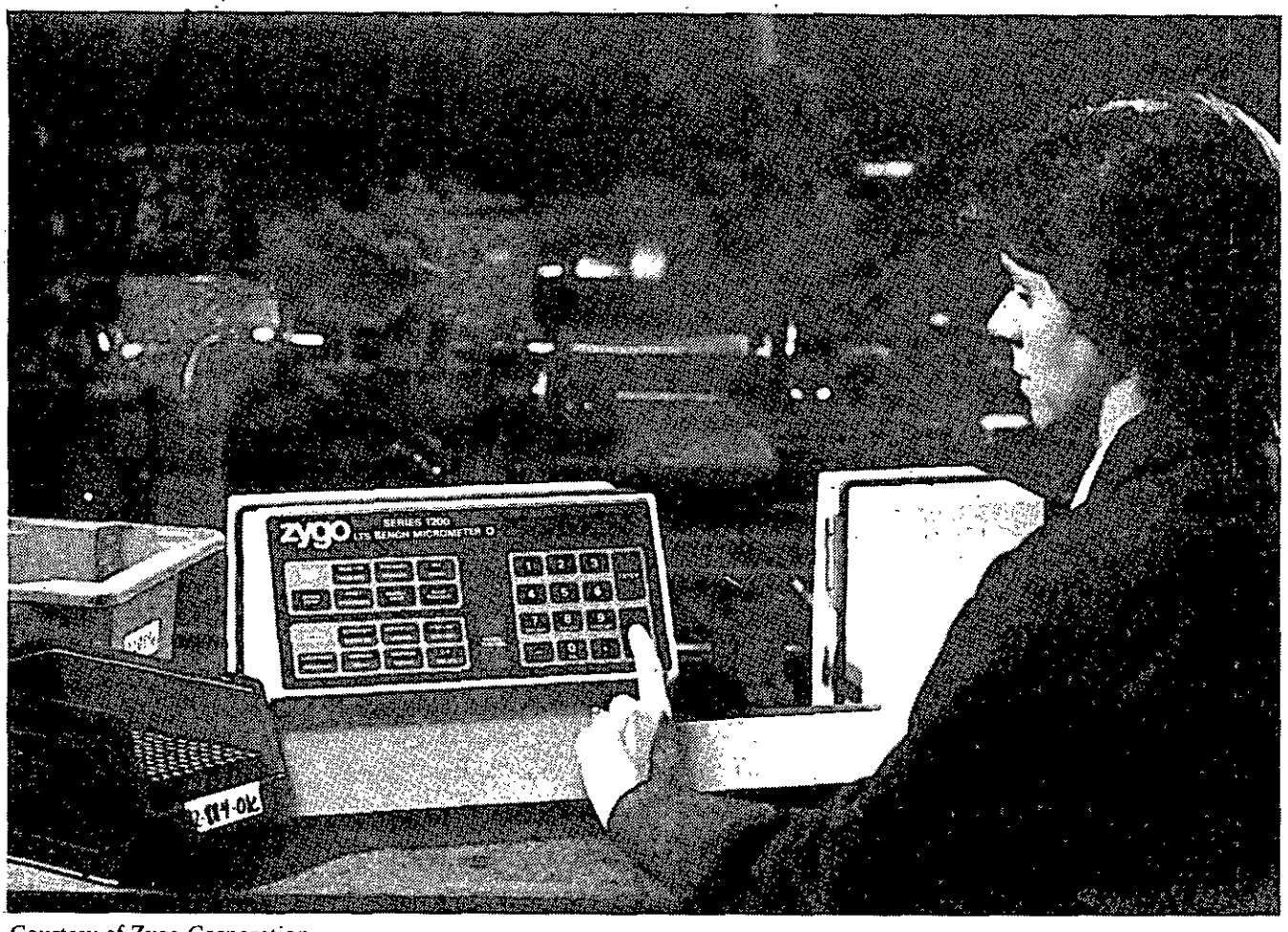

Courtesy of Zygo Corporation.

Figure 4-43. Scanning Laser Beam System

gaged. The data are sent to the controller where the dimension is calculated. The calculation is based on the precise timing of the edge positions and the scanning speed of the laser beam. The gaged dimension or the deviation from the nominal appears on a digital display.

Laser scanning systems are particularly well suited to in-process gaging of extruded products on the fly because the effects of periodic vibrations can be canceled by averaging several readings provided the movement is not synchronized with the scan. Products that are routinely gaged with this type of system include wire and cable, glass, plastic and rubber tubing, cigarette filters, windshield wipers, and weatherstripping. Precision bar and rod products with taper at both ends also can be gaged with laser scanning systems. Types of measurements made by these systems include diameter, position with respect to a fixed reference, multiple dimensions, and ovality.

Laser scanning devices exhibit several advantages inherent to electro-optical instruments: noncontact measurement, accommodation of large distances between the sensor and object, rapid response time limited only by the photodetector and its electronics, and conversion of light variations directly to electrical signals (Ref. 10). In addition, no routine calibration or adjustment is required, the system is relatively insensitive to external thermal and mechanical stresses and object motion, all electronics and the laser can be replaced in the field, problems are self-diagnosed, and marginal or incorrect signals are rejected.

The accuracy of laser scanning measurements is affected by the alignment of the object being measured, the motion of the object being measured, atmospheric effects, and dirt and dust (Ref. 11). If the gaged object is tilted with respect to the scan line, the error illustrated in Fig. 4-44 is introduced (Ref. 11). The error E_α is given

Downloaded from http://www.everyspec.com

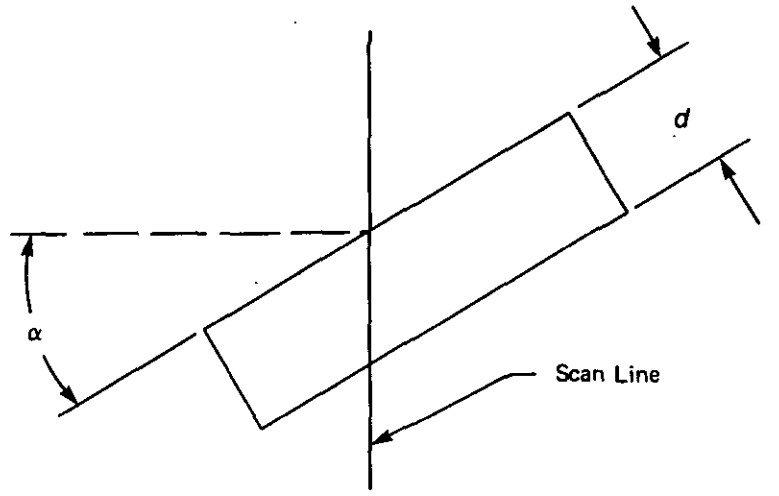

Used with permission of Mr. Carl A. Zanoni and the Society of Photo-Optical Instrumentation Engineers, Bellingham, WA.

Figure 4-44. Error Introduced by Gaged Object Tilt

by

$$E_\alpha = d\left(\frac{1}{\cos\alpha} - 1\right), \text{ in.} \tag{4-2}$$

where

d = diameter of part, in.
α = tilt angle, sec.

Motion of the part in the direction of motion of the measurement beam introduces an error in the measured part dimensions E_m given by

$$E_m = d_m(V_{tp}/V_b), \text{ in.} \tag{4-3}$$

where

d_m = measured dimension, in.
V_{tp} = transverse speed of measured part, in./sec
V_b = speed of measurement beam, in./sec.

Part motion transverse to the motion of the part through the gaging region introduces another error. If the motion is unidirectional, the error cannot be reduced by averaging, but the error introduced by vibratory motion may be reduced substantially by averaging. Although individual measurements can fluctuate due to atmospheric turbulence and temperature variations, averaging reduces this error source. Particulate matter or other light-beam-interrupting substances in the measurement region will modulate the light beam. Collimated, large diameter beams are less sensitive to this type of error than are narrowly focused beams. Oil films, grit, or dirt on the gaged object can introduce errors.

Laser scanning systems are commercially available that will gage dimensions ranging from 0.01 to 8.0 in. Repeatability varies from ±0.00001 in. in the 0.01- to 2.0-in. measurement range to ±0.0005 in. in the 0.38- to 8.0-in. range. Accuracy is of the same magnitude as repeatability.

Commercially available accessories and options include

1. High- and/or low-limit alarm activated when preset tolerances are exceeded
2. Signal retention of the smallest and/or largest dimension observed over a preselected period
3. Transparent object measurement option to suppress noise signals created by light that leaks through transparent objects

Downloaded from http://www.everyspec.com

4. End taper inhibit option to ignore measurements taken near the ends of processed rods or bars
5. Process controller to provide closed loop control of continuous processes
6. Solid-state external relays to convert digital outputs to 100, 200, or 220 VAC rated contact closures
7. Air window accessory to keep the optical windows clean
8. 90-deg turning mirror to bend the measuring beam through an angle of 90 deg
9. Terminal with keypad and monitor to interface the operator with the laser scanning system
10. Video monitor that provides a CRT display of measurement and error message information.

4.3 PNEUMATIC GAGING EQUIPMENT

A pneumatic gaging system—pneumatic comparator or air gage—indicates whether a part is in tolerance by measuring variations in air flow or pressure. The principal elements of a pneumatic gaging system, as illustrated in Fig. 4-45, include (Ref. 1)

1. Continuous supply of pressurized air
2. Pressure-reducing valve
3. Metering device (controlled obstruction)
4. Indicator (pressure or flow rate)
5. Gage head
6. Setting master.

Pneumatic comparators are recommended for repetitive measurements or measurements that must be carried out under conditions unfavorable for sensitive measurements, e.g., in-process gaging. It is the most practical method for gaging bores in the diameter size range from 0.020 to greater than 36 in. (Ref. 12). Applications for air gages categorized by geometric conditions include (Ref. 1)

1. Inside and outside diameters
2. Average material size of cylindrical part
3. Distance from a reference point
4. Departures from a nominal plane
5. Consistency of size or regularity of form
6. Interrelated dimensions, e.g., tapered bores, wall thickness, diameters at different levels, distances between opposite bore walls, diameters at different orientations, and thickness at different points
7. Interrelated positions or geometric conditions
8. Size matching of mating component parts
9. Multiple dimensions
10. Contours.

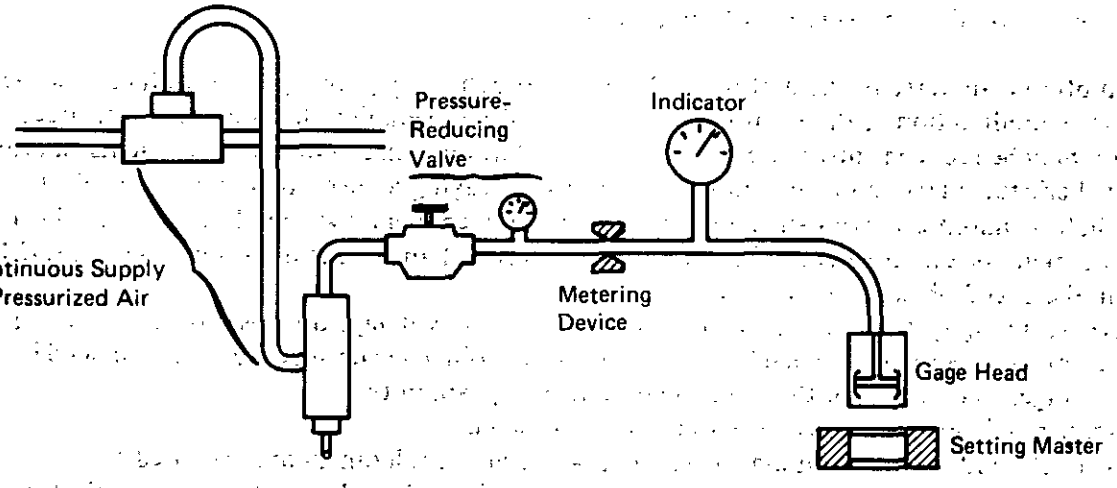

From *Handbook of Dimensional Measurement by F. T. Farago.* Copyright © by Industrial Press, Inc., 1968.

Figure 4-45. Principal Elements of Pneumatic Gaging System

Downloaded from http://www.everyspec.com

The two basic methods of air gage sensing can be classified as the direct or open-jet method and the indirect or contact method. The direct method is the preferred system of sensing for most applications.

Direct-sensing air gage heads use the direct flow of air from the nozzle to contact the surface of the test object. The head may have a single jet, dual jets, or multiple jets. Single, open-jet tooling checks include height, depth, and straightness. Dual-jet applications include gaging true diameter, out-of-roundness, squareness, angularity, thickness and amount of bell mouth. The dual jets are diametrically opposed so that the test object does not have to be placed precisely. In multiple-jet gage heads the jets are evenly spaced to allow measuring of average inside or outside diameters (Ref. 12).

Triangular out-of-roundness is checked with three-jet plugs. Average diameter readings can be taken with four jets, and six jets can be used to show average determinations for both two-jet and three-jet conditions (Ref. 1).

A contact-type sensing air gage head has a mechanical member between the air jet and the test object. The mechanical member can be a ball, a lever, a plunger, or a blade. Displacement of the mechanical member, when it is in contact with the test object, changes the air flow rate from the jet. Conditions that require the use of contact-type sensing members in air gages include (Refs. 1 and 12)

1. Surface roughness, generally rougher than 63 μin.
2. Interrupted surfaces, e.g., at the edge of a hole
3. Narrow lands
4. Porous materials
5. Extended gaging range, e.g., checking stock removal in lathe turning
6. Location inaccessible to open jets
7. Surface of irregular form located from a reference plane.

Inherent advantages of pneumatic gaging include (Refs. 1, 2, and 12)

1. Noncontact gaging when open-jet circuits are used
2. Cleaning of the test object by the air jet to minimize errors due to foreign matter on the test surface
3. No sliding members, which eliminates this source of gage wear and measurement error
4. Operation by unskilled personnel
5. Small overall size of the sensing members to permit access to hard-to-reach surfaces
6. Inspection of multiple dimensions
7. Remote gage head location—up to 100 ft from indicator with a free flow system—without loss of response speed or accuracy
8. Interchangeable tooling for different gaging applications
9. Interchangeable amplification to accommodate a wide range of tolerances and accuracies
10. Relatively low initial, operating, and maintenance costs
11. Continuous indication that permits measurement of moving parts
12. Averaging and combining capabilities of multiple gages
13. Time savings in gaging multiple dimensions.

The major limitation to applying air gaging is the range of size variations that can be measured. Open-air jets can be used only if the range is less than 0.003 in., whereas contact-type sensing members can be used for ranges as high as 0.10 in. (Ref. 12). Also, open-air jets cannot be used under extremely dirty conditions. Air gage indications are also sensitive to test object geometry. Setting masters of essentially identical geometry to the test object must be used.

The accuracy that can be attained with an air gage system is a function of the amplification. For example, for a standard 9-in. column instrument of one manufacturer, the tolerance ranges from 0.005 in. at 1000:1 amplification up to 0.00015 in. at 40,000:1 amplification. On a super-amplification, long-range, 15-in. column instrument, the tolerance ranges from 0.0024 in. at 5000:1 amplification to 0.00012 in. at 100,000:1 amplification (Ref. 12).

Practically all air gaging applications can be performed automatically. The basic unit of automatic pneumatic gaging systems is the back-pressure air-to-electric transducer. The transducer signals a pressure change as small as 0.05 psi, is unaffected by vibration, and has high response speed. Both open-jet and contact gage heads can be used in automatic systems (Ref. 12).

Downloaded from http://www.everyspec.com

An electric transducer can be applied when tolerance limits are gaged. When a test object is out of tolerance, an electrical impulse is supplied that may be used to activate signal lights or to actuate solenoids or relays.

Two additional transducers, the differential and the variation transducers, can be used to automate pneumatic circuits (Ref. 12). The differential air-to-electric transducer is used with two gage circuits to indicate the amount of difference between two given sizes. Its applications include the measurement of taper, parallelism of holes, center distance, and location gaging. The variation transducer is used with a single circuit to gage the amount of variation of a single test object dimension by comparing it to a preset value. It is used for gaging out-of-roundness, cloverleaf, face-to-axis runout, and concentricity.

The two general types of air gage systems are free flow and back pressure. Free flow air gages operate by sensing variations in the air speed. Fig. 4-46 is a schematic of a free flow air gage (Ref. 12). Gages that operate by measuring the air flow rate represent the simplest and least costly air gage system in terms of initial cost and maintenance. This system has the additional advantages of giving a quick indicating response regardless of the distance of the gage head from the indicator, of clearly displaying the indications on a scale, of amplifying indications up to 200,000:1, and of having a compact design (Ref. 12). Flow-type air gages, however, cannot actuate auxiliary switches, recorders, etc.

Back-pressure air gages consist of a regulated, constant pressure air supply entering a control orifice of predetermined size and passing into the gaging element through an appropriate conduit, e.g., a Venturi tube. Pressure variation between the control orifice and the conduit is a simple function of the dimension being gaged and is usually indicated by an indicator dial. All back-pressure gages are based on the thermodynamics of an adiabatically expanding perfect gas (Ref. 13).

There are several types of back-pressure gages including basic back pressure, differential back pressure, water column back pressure, and Venturi back pressure. Fig. 4-47 illustrates a basic back-pressure air gage system. The types of back-pressure air gages differ in the method used to measure pressure variations, but the characteristics of the gages are similar. The major advantage of using a back-pressure gage is that it can be equipped with electrical contacts to activate signal lights and relays (Ref. 2). Back-pressure gages require more maintenance than free flow gages because the moving parts are subject to wear. Back-pressure gages also provide lower amplification and have longer response times, especially when the gage head is separated from the indicator by several feet.

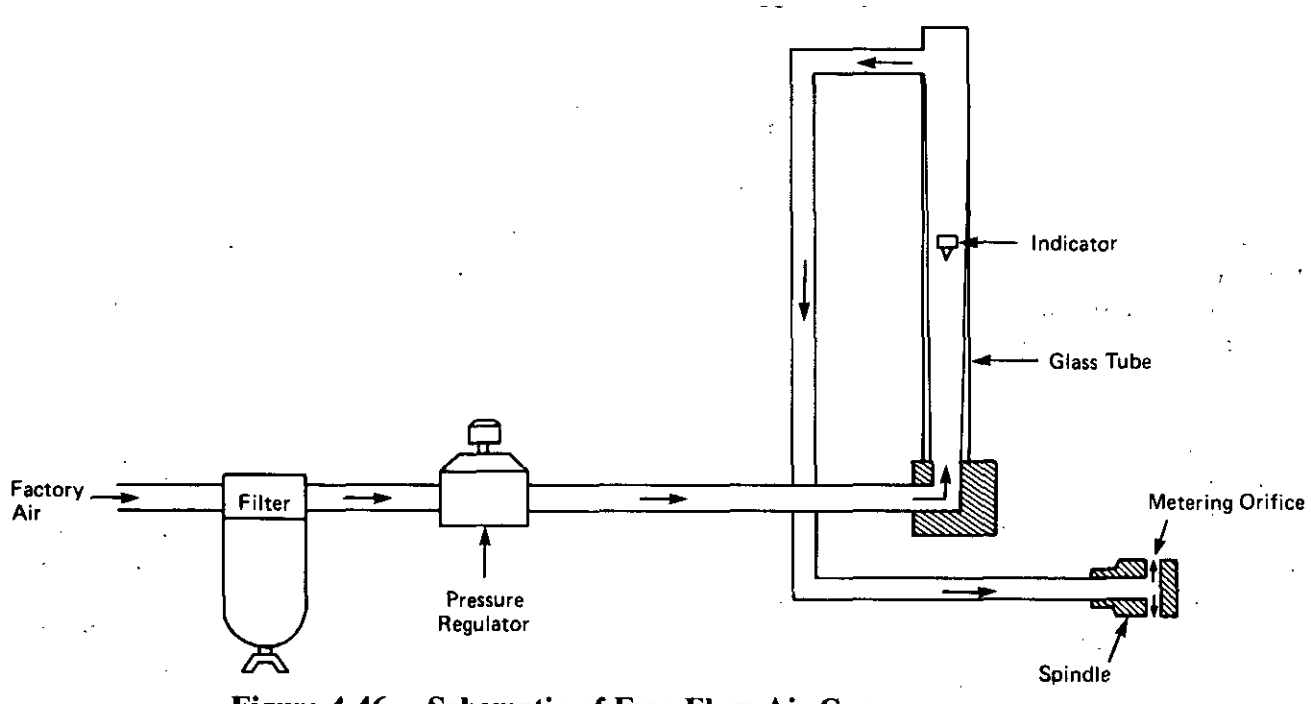

Figure 4-46. Schematic of Free Flow Air Gage

Downloaded from http://www.everyspec.com

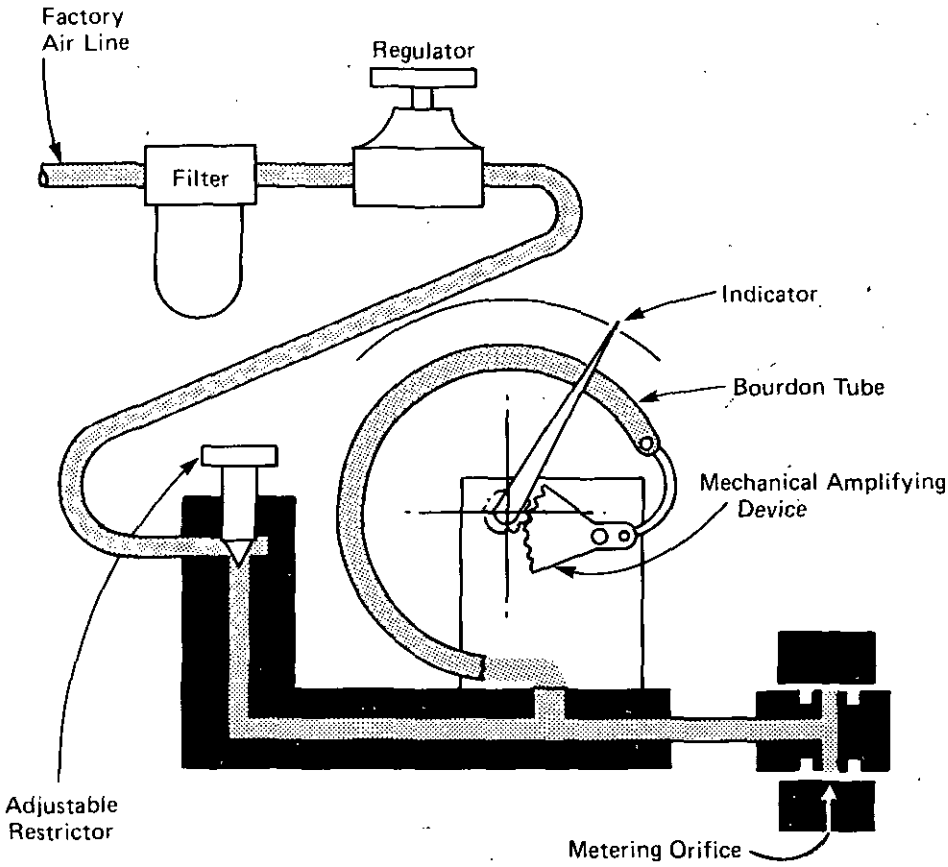

Sheffield Measurement Division, The Warner & Swasey Company.

Figure 4-47. Basic Back-Pressure-Type Air Gage System

4.4 INDIRECT MEASURING EQUIPMENT

Much indirect measuring equipment employs techniques that generally are used for nondestructive testing (NDT) purposes. NDT normally performs flaw detection and sorting and evaluation of materials for various physical properties. NDT methods may also be used to do dimensional gaging and measuring. The NDT methods discussed in the paragraphs that follow are eddy current, ultrasonic, penetrating radiation, magnetic field, and electric current. For additional information on NDT methods, see Chapter 5.

4.4.1 EDDY CURRENT

The response of an eddy current test system can be used to measure the thickness of relatively thin conductive or nonconductive materials. Eddy currents are alternating electrical currents that are electromagnetically induced into a conductive material and penetrate to varying depths that depend on the specific conductivity of the material and the frequency of the alternating current.

4.4.2 ULTRASONIC

Ultrasonic measurement techniques can be used to determine the thickness of a range of materials such as ferrous and nonferrous metals, glass, ceramics, wood, concrete, rubber, and plastics (including composites). Two basic time-modulated measurement methods, pulse echo and resonance, generally are used. In the pulse echo method the echoes returning from various boundaries in the gaged product are timed, and a known or assumed velocity is used to determine the thickness. In the resonance method the frequency of the sound wave is modulated such that a fundamental acoustic standing wave is established in the specimen when the round-trip distance equals one wavelength.

Downloaded from http://www.everyspec.com

4.4.3 PENETRATING RADIATION

Penetrating radiation from X-ray or radioisotope sources can be used for in-process thickness gaging and the measurement of pipe or tube wall thickness. Two basic techniques, transmission and backscatter, can be used. When the transmission technique is employed, a source of penetrating radiation is placed on one side of the product and a detector on the opposite side. The quantity of radiation penetrating the product is inversely proportional to the weight per unit area of the product. In the backscatter technique the intensity of the backscattered (reflected) radiation is proportional to the thickness of the product.

4.4.4 MAGNETIC FIELD

Magnetic field testing can be used to gage the wall thickness of nonferrous metals, glass, plastic, wood, or similar materials by the probe measurement method and the thickness of ferromagnetic materials from one side by the Hall generator method. In the probe measurement method a gradient probe is placed on one side of the product and a permanent magnet on the other. The magnetic field strength measured by the probe is a function only of the distance from magnet to probe. When making a measurement with the Hall generator, a three-pronged yoke electromagnet is placed on the test object, and magnetic flux is induced in the center prong. The increase in flux that results from placing the yoke on the product is proportional to the wall thickness and saturation magnetization of the wall material.

4.4.5 ELECTRIC CURRENT

The direct current conduction method can be used to measure the wall thickness of an electrically conducting object. In this method four electrodes are placed in contact with an electrically conducting object. A current I is passed between two of the electrodes and produces a potential V across the other two electrodes. The ratio V/I is directly proportional to the wall thickness of the product.

REFERENCES

1. F. T. Farago, *Handbook of Dimensional Measurement*, Industrial Press, Inc., New York, NY, 1968.
2. L. C. Michelon. *Industrial Inspection Methods*, Harper & Brothers Publishers, New York, NY, 1950.
3. R. C. McMaster, Ed., *Nondestructive Testing Handbook*, The Ronald Press Company, New York, NY, 1959.
4. A. W. Judge, *Engineering Precision Measurements*, Chapman & Hall Ltd., London, England, 1957.
5. W. G. Driscoll, Ed., *Handbook of Optics*, McGraw-Hill Book Company, Inc., New York, NY, 1978.
6. P. Kissam, *Optical Tooling for Precise Manufacture and Alignment*, McGraw-Hill Book Company, Inc., New York, NY, 1962.
7. R. E. Bible and J. R. DeAguiar, "Electro-Optics in Industrial Metrology", In: *Advances in Optical Metrology*, Proceedings of the Society of Photo-Optical Instrumentation Engineers, San Diego, CA, 28-29 August 1978.
8. E. V. Harbert, Jr., "Photo-Optic Measuring Systems", In: *Advances in Optical Metrology*, Proceedings of the Society of Photo-Optical Instrumentation Engineers, San Diego, CA, 28-29 August 1978.
9. G. P. Weckler, "Image Detection for Industrial Gaging and Inspection", In: *Solving Quality Control and Reliability Problems With Optics*, Proceedings of the Society of Photo-Optical Instrumentation Engineers, San Diego, CA, 15-16 May 1975.
10. R. Moore, "Laser-Based Noncontact Gauge for Small Parts Inspection", In: *Effective Utilization of Optics in Quality Assurance*, Proceedings of the Society of Photo-Optical Instrumentation Engineers, Arlington Heights, IL, 14-16 November 1977.
11. C. A. Zanoni, "Dimensional Gauging Using a Scanning Laser Beam". In: *Clever Optics: Innovative Applications of Optics*, Proceedings of the Society of Photo-Optical Instrumentation Engineers, San Diego, CA, 25-26 August 1977.
12. J. W. Greve and F. W. Wilson, Eds., *Handbook of Industrial Metrology*, Prentice-Hall, Inc., Englewood Cliffs, NJ, 1967.
13. Louis Polk, "A Review of Pneumatic Dimensional Gages", Presented at International Conference on Engineering Dimensional Metrology, England, October 1953.

Downloaded from http://www.everyspec.com

BIBLIOGRAPHY

E. P. De Garmo, *Materials and Processes in Manufacturing*, The Macmillan Company, London, England, 1969.

K. J. Hume, *Engineering Metrology*, Macdonald Technical & Scientific, London, England, 1970.

A. W. Judge, *Engineering Precision Measurements*, Chapman & Hall Ltd., London, England, 1957.

P. Kissam, *Surveying Practice: The Fundamentals of Surveying*, McGraw-Hill Book Company, Inc., New York, NY, 1971.

Optics in Metrology and Quality Assurance, Proceedings of the Society of Photo-Optical Instrumentation Engineers, Los Angeles, CA, 6-7 February 1980.

Interferometry, Proceedings of the Society of Photo-Optical Instrumentation Engineers, San Diego, CA, 29-30 August 1979.

Contemporary Optical Systems and Component Specifications, Proceedings of the Society of Photo-Optical Instrumentation Engineers, Washington, DC, 19-20 April 1979.

Practical Applications of Low Power Lasers, Proceedings of the Society of Photo-Optical Instrumentation Engineers, San Diego, CA, 26-27 August 1976.

Quality Assurance in Optical and Electro-Optical Engineering, Proceedings of the Society of Photo-Optical Instrumentation Engineers, Delft, Netherlands, 2-4 September 1975.

ANSI/ASTM B 567-79a, *Standard Method for Measurement of Coating Thickness by the Beta Backscatter Method*, American Society for Testing and Materials, Philadelphia, PA, February 1980.

ASTM D 1400-81, *Standard Method for Nondestructive Measurement of Dry Film Thickness of Nonconductive Coatings Applied to a Nonferrous Metal Base*, American Society for Testing and Materials, Philadelphia, PA, September 1981.

ANSI/ASTM E 376-69, *Standard Recommended Practice for Measuring Coating Thickness by Magnetic Field or Eddy Current (Electromagnetic) Test Methods*, American Society for Testing and Materials, Philadelphia, PA, October 1969 (Reapproved 1979).

ASTM D 1186-81, *Standard Methods for Nondestructive Measurement of Dry Film Thickness of Nonmagnetic Coatings Applied to a Ferrous Base*, American Society for Testing and Materials, Philadelphia, PA, September 1981.

ANSI/ASTM G 12-77, *Standard Method for Nondestructive Measurement of Film Thickness of Pipeline Coatings on Steel*, American Society for Testing and Materials, Philadelphia, PA, May 1978.

ASTM B 499-75, *Standard Method for Measurement of Coating Thicknesses by the Magnetic Method: Nonmagnetic Coatings on Magnetic Base Metals*, American Society for Testing and Materials, Philadelphia, PA, October 1975, (Reapproved 1980).

ASTM B 530-75, *Standard Method for Measurement of Coating Thicknesses by the Magnetic Method: Electrodeposited Nickel Coatings on Magnetic and Nonmagnetic Substrates*, American Society for Testing and Materials, Philadelphia, PA, October 1975 (Reapproved 1980).

ASTM B 568-79, *Standard Method for Measurement of Coating Thickness by X-Ray Spectrometry*, American Society for Testing and Materials, Philadelphia, PA, August 1979.

Downloaded from http://www.everyspec.com

CHAPTER 5
SPECIAL MEASURING APPLICATIONS

Measurements for which noncontact or nondestructive techniques may be applied and for which special methods have been developed are described in this chapter. Each measurement method or type of equipment is briefly described and illustrated, and principles of operation, advantages, limitations, and accuracy are discussed.

5.0 LIST OF SYMBOLS

A = size of collimator reticle, in.
A' = measured size of image, in.
d_m = mean diameter, in.
E_d = estimated standard deviation expressed as percent of diameter, %
F_o = focal length of collimator objective lens, in.
F_x = focal length of test lens, in.
f = focal length, in.
h = fringe width, μin.
N = refractive index, dimensionless
n = number of fringes, dimensionless
$(NA)_i$ = numerical aperture of ith collimator or surface position, dimensionless.
$QWOT$ = quarter wave optical thickness, μin.
R = radius of curvature, in.
R_m = measured radius of curvature, in.
R_1 = radius of curvature of surface being tested, in.
R_2 = radius of curvature of shop standard glass, in.
r = radius of spherometer ball feet, in.
r_m = mean range, in.
S = length of side of an optical component, in.
s = distance spherometer plunger moves, in.
s' = effective sagitta, in.
s_1 = distance from 0 to point on axis of curvature intersected by radius of first Newton's ring, in.
s_2 = s_1 minus effective sagitta, in.
t = film thickness, μin.
= physical thickness of coating, μm
x = radius of first Newton's ring, in.
x_ν = radii of Newton's rings, in.
Δx = fringe shift, μin.
y = distance from center of a spherometer ball foot to center of plunger, in.
δ = axial focus error, in.
ν = number of Newton's rings, dimensionless
ξ_a = angle error, dimensionless
ξ_i = focus error determined from ith wave front measurement, in.
λ = wavelength of light, in. or μin.

Downloaded from http://www.everyspec.com

5.1 INTRODUCTION

This chapter examines special techniques for determining the material integrity of selected nonmetallic materials. In some cases standard test methods have been developed for particular applications, and in others, instruments have been developed specifically for particular measurements.

Applications discussed in this chapter are the measurement of optical element and system parameters; thickness of elastomeric materials, cloth, paper, and coatings; cloth length and width; fiber diameter; and surface texture.

5.2 OPTICAL ELEMENTS AND SYSTEMS

The measurement of various optical element and system parameters is discussed in this paragraph. The parameters covered include focal length, radius of curvature, thickness, angles, optical coating thickness, and surface quality.

5.2.1 FOCAL LENGTH

The most straightforward method of illustrating focal length is through the use of a thin convex lens. Fig. 5-1 is a graphical representation of the focal length f of a thin convex lens, which may be defined either as (1) the object distance of a point object on the lens axis whose image is at infinity (The rays originating from the first focal point are rendered parallel to the optical axis.) or (2) the image distance of a point object on the lens axis at an infinite distance from the lens (The parallel rays originating at the point object are focused at the second focal point.) (Ref. 1). For a detailed discussion of first-order optics—including definitions and equations for the cardinal points (first and second focal points, first and second principal points, and first and second nodal points)—refer to Chapter 6 of Ref. 2.

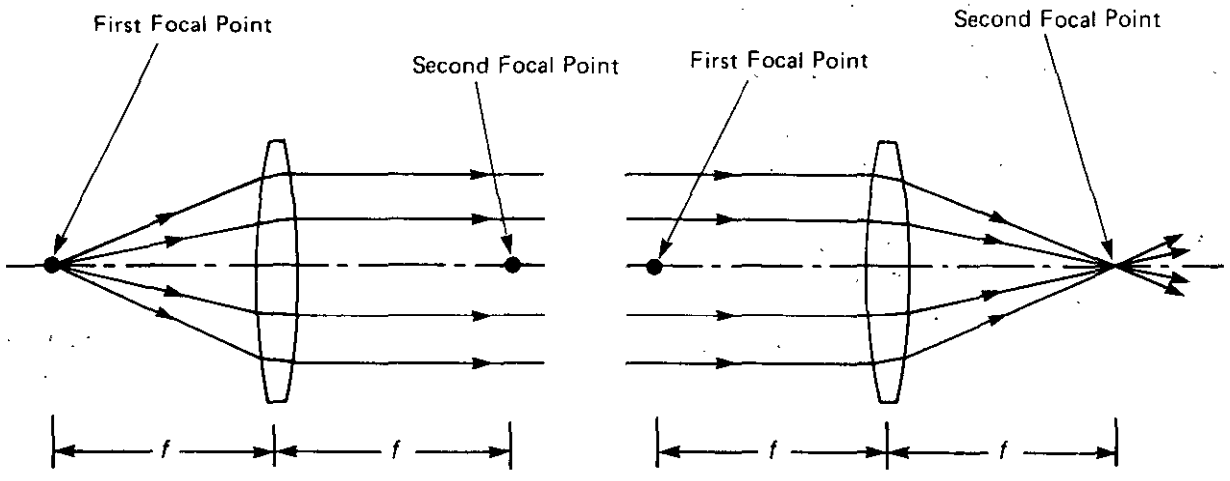

F. W. Sears and M. W. Zemansky, *University Physics*, © 1955, Addison-Wesley, Reading, MA. Pg. 767, Fig. 42-5. Reprinted with permission.

Figure 5-1. Graphical Representation of Focal Length

The optical bench or lens bench can be used to measure effective focal length. Basically, a lens bench consists of a collimator, a device for holding the optical system under test (lens holder), a microscope, and a means for supporting these components (Ref. 3). The collimator consists of a well-corrected objective lens or lenses and an illuminated target at the focus of the objective. For visual work the objective is usually a well-corrected achromat; for infrared work a paraboloidal mirror is used. If a focal collimator is desired, the target may be a pinhole, a resolution target, or a calibrated scale. The lens holder can range in complexity from a simple platform with wax to stick the lens in place to a T-bar nodal slide that generates a flat image surface. The

Downloaded from http://www.everyspec.com

microscope is usually equipped with at least one micrometer slide and often with two or three orthogonal slides to insure accurate measurements. (Ref. 3).

The two basic lens bench techniques for measuring focal length are the nodal slide method and the focal collimator (Ref. 3). The test setups for these methods are illustrated in Fig. 5-2.

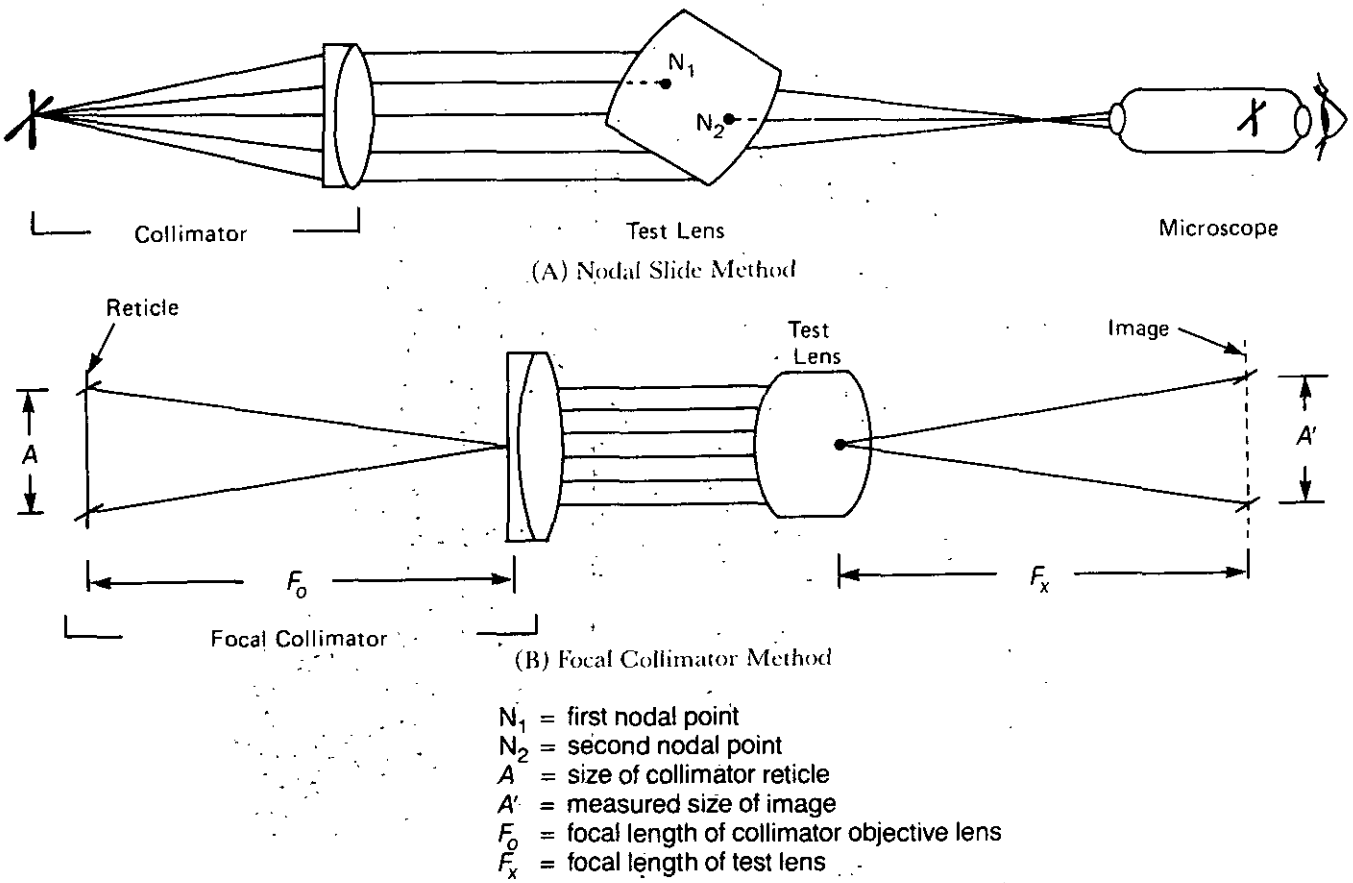

From *Modern Optical Engineering: The Design of Optical Systems* by W. J. Smith. © 1966 by McGraw-Hill Book Company. Reprinted with permission.

Figure 5-2. Test Setups for Measuring Focal Length on a Lens Bench

Fig. 5-3 is a photograph of a nodal slide. The essential part of the nodal slide is the provision for moving the lens longitudinally with respect to the vertical axis of rotation. Fig. 5-4 is a schematic representation of the test setup. When effective focal length is measured, the lens under test is illuminated by a collimator and the microscope is placed to view the image of the collimator reticle. The lens is then moved forward or backward along the nodal slide until the point is reached at which rotation of the lens through a small angle produces no lateral shift of the image seen in the microscope. This point is the second nodal point of the lens. The focal length is then the distance between the second nodal point, i.e., the axis of rotation of the nodal slide, and the appropriate focal point of the microscope.

The primary limitation of this method is the location of the nodal point. The procedure for changing the location of the lens and rotating it is tedious and discontinuous, and it is difficult to make an exact setting. If the axis of the test lens is not centered accurately at the nodal point, no position will exist at which the image stands still. Also measurement of the distance from the nodal point to the position of the aerial image is subject to error if the equipment is not calibrated carefully.

Downloaded from http://www.everyspec.com

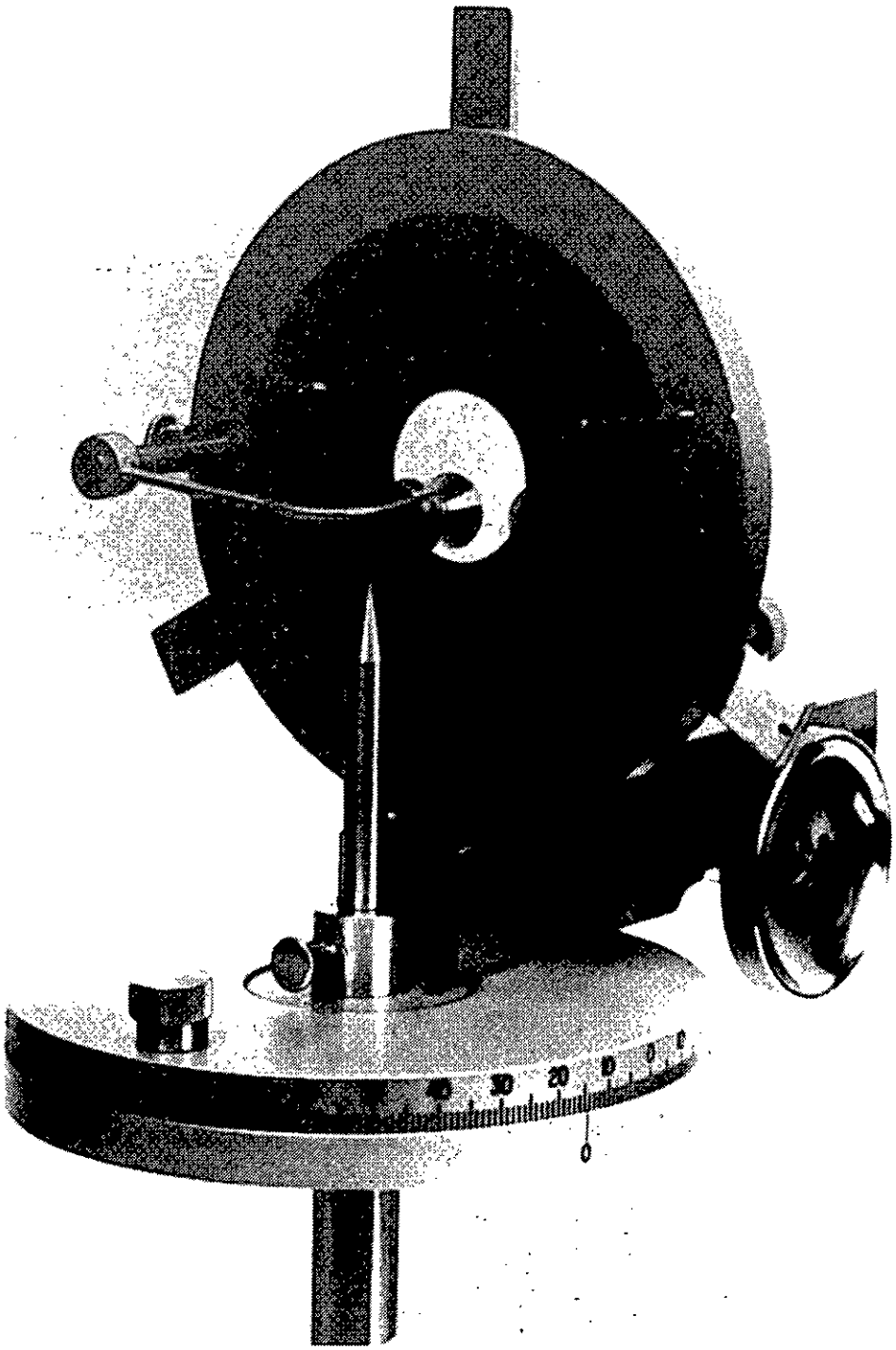

Courtesy of The Ealing Corporation.

Figure 5-3. Nodal Slide

Downloaded from http://www.everyspec.com

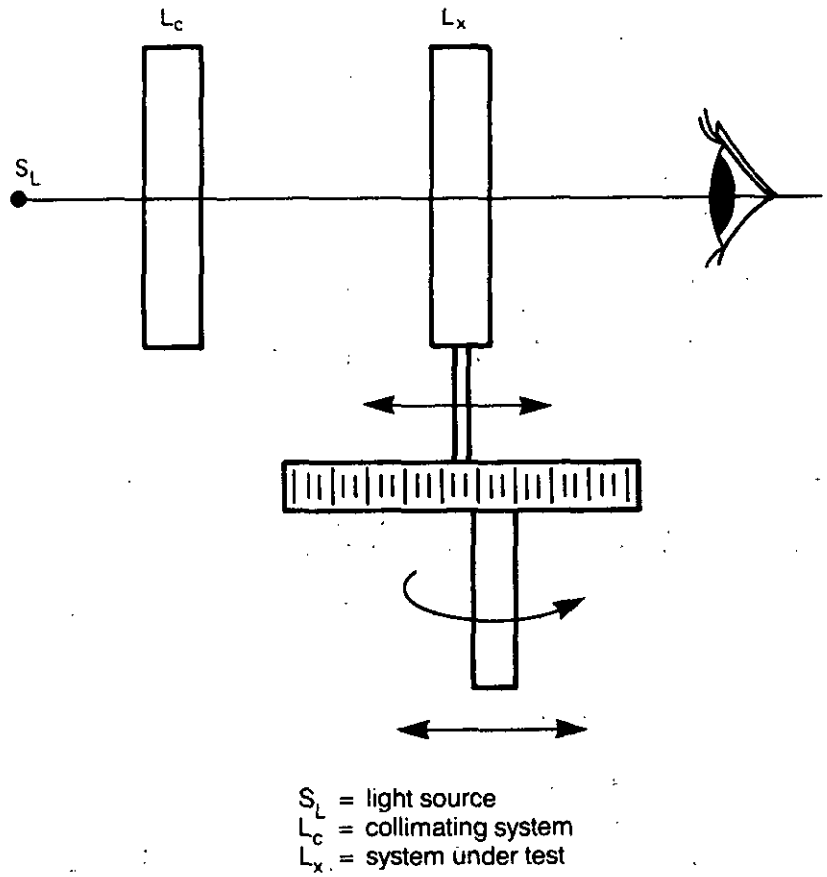

Figure 5-4. Measurement of Focal Length by Use of Visual Nodal Slide

A focal collimator consists of an objective with a calibrated reticle at its focal point (Ref. 3). The focal length of the objective and the size of the reticle must be accurately known. When the measurement is made, the test lens is set up and the size of the image formed by the lens is measured accurately with the measuring microscope. As shown by Fig. 5-2, the focal length F_x of the test lens is (Ref. 3)

$$F_x = A'\left(\frac{F_o}{A}\right), \text{ in.} \tag{5-1}$$

where

A' = measured size of image, in.
A = size of collimator reticle, in.
F_o = focal length of collimator objective lens, in.

The calculated value of the focal length is subject to any inaccuracies in the values of A', A, and F_o. Also if an error is made when the longitudinal position of the measuring microscope is set, it will be reflected in F_x. Both the nodal slide and focal collimator methods assume the test lens is free of distortion. If appreciable distortion exists, the tests must be made over a small angle; this angle size limits the accuracy possible.

5.2.2 RADIUS OF CURVATURE

The method employed to measure the radius of curvature of an optical surface is a function of the required precision and the size of the lens. Methods presented here include the use of a template, microscope and lens bench, spherometer, test plate, and autocollimator and interferometer.

Downloaded from http://www.everyspec.com

5.2.2.1 Template

The curvature of an optical surface can be measured quickly and conveniently by noting the fit to that surface of a plate or template of known curvature (Ref. 5). The edge of the template is held against the surface, and a bright light is placed beside the template opposite the viewing side. Openings on the order of a wavelength may be seen. Smaller openings will exclude longer wavelengths, and light from a white source will become blue. The template should be moved longitudinally to indicate whether a particular opening is associated with a malformation of the template—the opening will move with it—or is a deviation of the surface from the desired curvature.

Measurement of the radius of curvature by comparison to a template is limited to the number of different templates available in a particular test location. In addition, the optical surface may be damaged through contact with the template. In this regard, cleanliness is very important because a single bit of dust can scratch the test surface.

5.2.2.2 Microscope and Lens Bench

Small and medium-sized optical components commonly are measured with a microscope and lens bench (Ref. 5). Fig. 5-5 illustrates the test setup. The microscope first is focused on the surface of the component and then on the center of curvature. When concave surfaces are measured, either the microscope or component may be moved. When convex surfaces are measured, however, a well-corrected lens with a conjugate distance larger than the radius of curvature is required. In this case, it is more convenient to move the component.

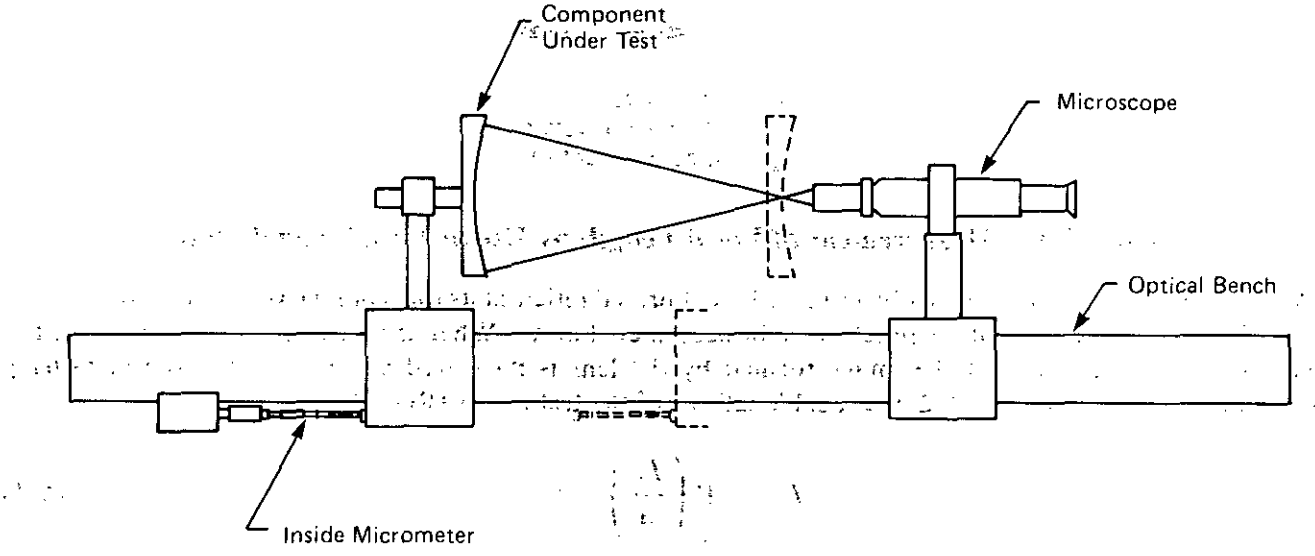

Reprinted with permission. © 1978 by John Wiley and Sons, Inc.

Figure 5-5. Test Setup For Microscope and Lens Bench Method of Radius of Curvature Measurement

The method of measuring the radius of curvature, i.e., the distance moved, depends on the desired accuracy. An accuracy of ±0.004 in. can be achieved by using a vernier scale on the component carriage and a good metal rule on the optical bench. An "inside" or bar micrometer should be used to obtain an accuracy of ±0.0004 in.

5.2.2.3 Spherometer

The spherometer—illustrated in Fig. 5-6—commonly is used to measure the radius of curvature of an optical surface with a diameter on the order of 1 to 3 in. but it also can be used on optical components with

Downloaded from http://www.everyspec.com

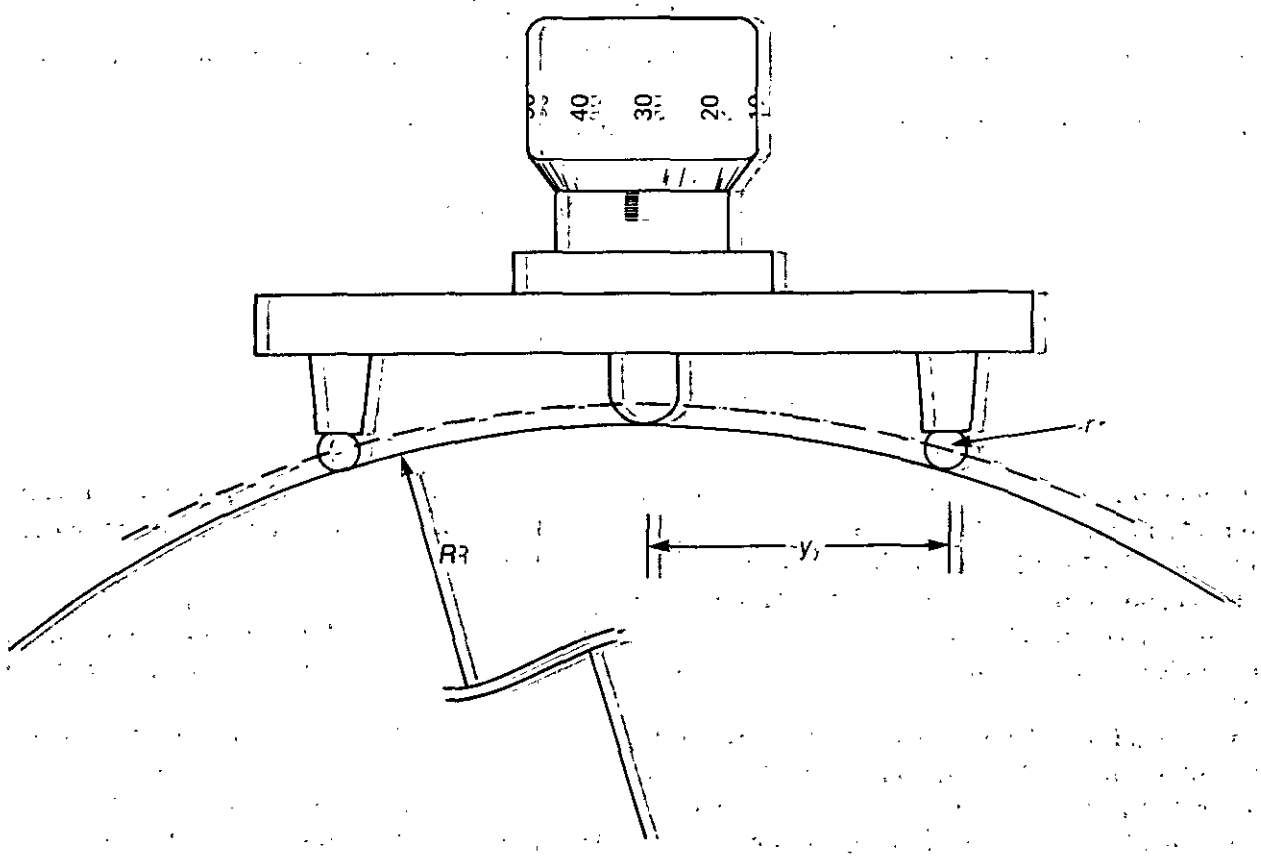

Reprinted with permission © 1978 by John Wiley and Sons, Inc.

Figure 5-6. Spherometer

diameters larger than the spherometer. Its precision is a function of the radius of curvature being measured and of the characteristics of the particular instrument (Ref. 5).

The spherometer functions by measuring the sagitta of a part of the sphere. The instrument takes many forms. For example the part of the sphere being measured can be delineated by a cup or ring that touches the sphere in a circle. Most often, in a precision spherometer, three equally spaced feet (steel balls) define an equilateral triangle. In the center of this triangle a ground steel plunger with micrometer graduations is used to measure the sagitta. The plunger is kept in contact with the surface being measured by a counterbalancing weight with cords and pulleys.

In use, the spherometer is first placed on a flat surface to check the zero of the scale (Ref. 5). It is next placed on the surface to be measured, and the plunger is adjusted until it just touches the sphere. Then the sagitta is read from the scale on the plunger. The surface on which the device sits has a radius of curvature R (Refs. 2, 5, and 6)

$$R = \frac{s}{2} + \frac{y^2}{2s} \pm r, \text{ in.} \qquad (5\text{-}2)$$

where

s = distance spherometer plunger moves, in.
y = distance from center of each ball foot of spherometer to center of plunger, in.
r = radius of ball feet, in.

Downloaded from http://www.everyspec.com

The plus sign associated with the r term in Eq. 5-2 is used for concave surfaces, and the minus sign for convex surfaces.

Precision can be determined by differentiating Eq. 5-2 to obtain (Ref. 5)

$$\frac{dR}{ds} = \frac{1}{2} - \frac{y^2}{2s^2}, \text{ dimensionless} \tag{5-3}$$

or

$$\Delta R = \frac{\Delta s}{2}\left(1 - \frac{y^2}{s^2}\right), \text{ in.} \tag{5-4}$$

Commercial spherometers are available with y values from 0.4 to 4.0 in. or even larger. If a representative y value of 2 in. and a Δs—the precision of reading the plunger scale—of 0.0002 in. are assumed, the radius of any sphere smaller than 5.5 yd can be ascertained to a precision of better than 2% (Ref. 5).

Two main sources of error, particularly of large components, are associated with using the spherometer to measure curvature. These are (1) the difficulty of determining the effective radius of the circle passing through the ball feet points of contact and (2) the exact location of the point of contact between the plunger and test surface.

As shown Fig. 5-7, the electronic column spherometer uses a linear voltage differential transformer probe in place of a plunger. Dimensional variations are displayed on the viewing scale by high-intensity light-emitting diodes (LEDs). The instrument offers a choice of 12 different operating ranges for different gaging requirements. For the smallest operating range (±0.00025 in.), the resolution is 0.00001 in. (Each LED represents 0.00001 in.) The measurement repeatability is 10 μin.

5.2.2.4 Test Glass

In this method the optical surface is compared interferometrically to a shop standard glass of predetermined radius of curvature. The radius of curvature R_2 of the shop standard glass should vary only slightly from the radius of curvature R_1 of the surface being tested. The surface S_1 being tested is placed on top of the shop standard glass S_2 as shown in Fig. 5-8. Dark circular fringes seen around the point 0 with white light sources are called Newton's rings or Newton's fringes. The central fringe is black at point 0 when S_1 and S_2 are in contact because there is a phase difference of one-half vibration between the reflections at S_1 and S_2 (Ref. 2). The "effective sagitta" s' in Fig. 5-8 is given by (Ref. 2)

$$s' = s_1 - s_2, \text{ in.} \tag{5-5}$$

where

s_1 = distance from 0 to point on axis of curvature intersected by radius of first Newton's ring, in.
s_2 = s_1 minus effective sagitta, in.

and the radius x of the first Newton's ring is

$$x^2 = 2R_1 s_1 - s_1^2 = 2R_2 s_2 - s_2^2, \text{ in.}^2 \tag{5-6}$$

where

R_1 = radius of curvature of surface being tested, in.
R_2 = radius of curvature of shop standard glass, in.

Neglect s_1^2 and s_2^2 in comparison with $2R_1s_1$ and $2R_2s_2$, respectively, and substitute the expressions for s_1 and s_2 from Eq. 5-6 into Eq. 5-5. The result is

Downloaded from http://www.everyspec.com

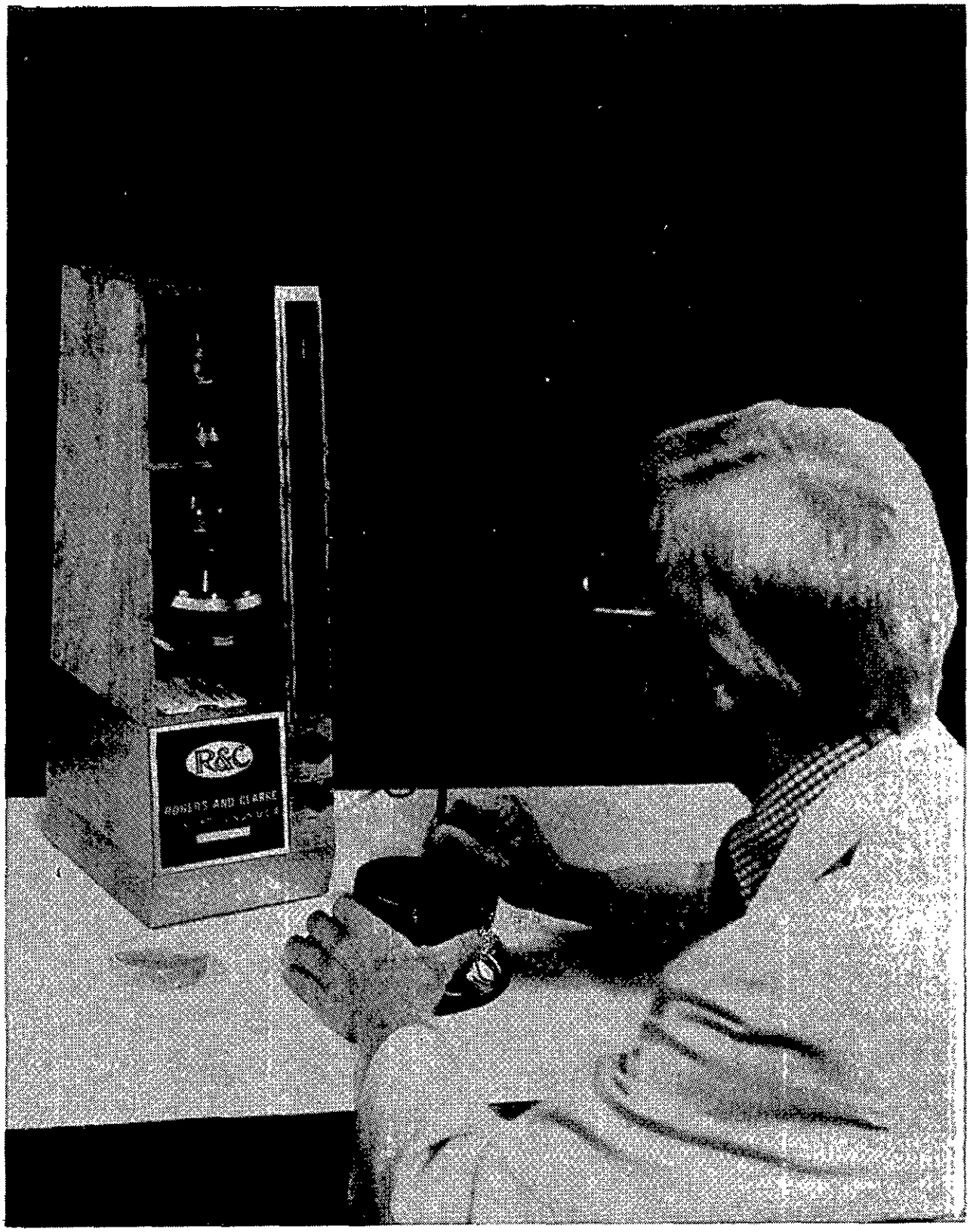

Electronic Column-Spherometer from Rogers and Clarke Manufacturing Company, Rockford, IL.

Figure 5-7. Electronic Column Spherometer

Downloaded from http://www.everyspec.com

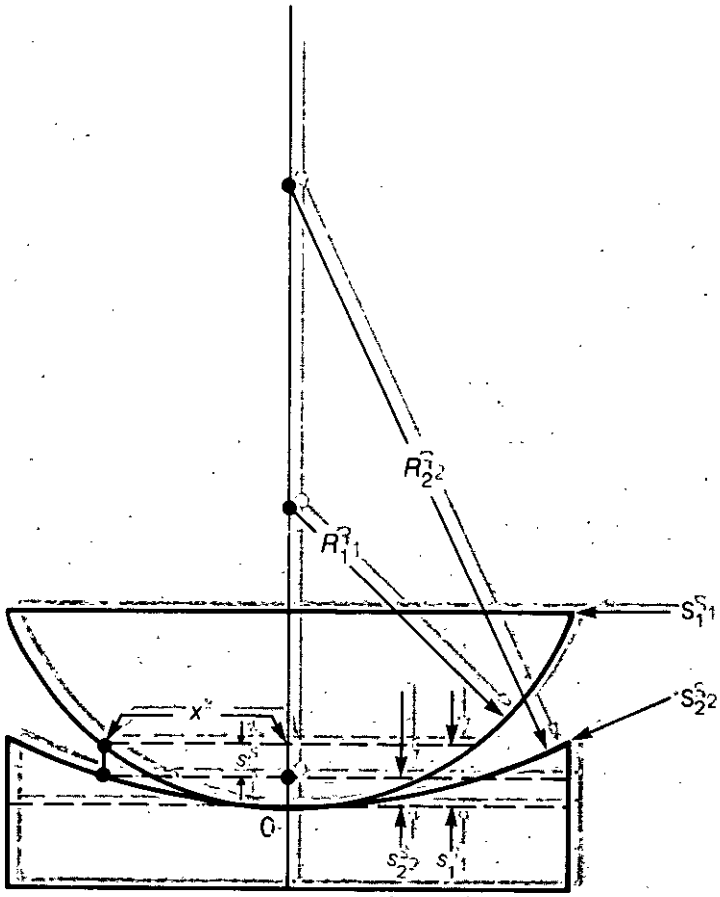

Figure 5-8. Sagitta Method When Reference Surface S_2 Is a Sphere

$$s' = \frac{x^2}{2}\left(\left(\frac{1}{R_1} - \frac{1}{R_2}\right)\right) = \frac{x^2}{2}\left(\left(\frac{R_2 - R_1}{R_1 R_2}\right)\right), \text{ in.} \tag{5-7}$$

Dark fringes occur at radii x_ν for which (Ref. 2)

$$x_\nu = \sqrt{\left(\left(\frac{R_1' R_2'}{R_2' - R_1'}\right)\right)\nu\lambda}, \text{ in.}; \nu = 1, 2, 3, \ldots, n \tag{5-8}$$

where

x_ν = radius of Newton's νth ring, in.
ν = number of Newton's rings, dimensionless
λ = wavelength of light, in.

If R_1 and R_2 are nearly alike, one may set $R_1' R_2' = R_2^2$ (Ref. 2). Within the validity of this approximation, Eq. 5-8 becomes (Ref. 2)

$$R_2' - R_1' = \left(\left(\frac{R_2'^2}{x_\nu}\right)\right)^2 \nu\lambda, \text{ in.} \tag{5-9}$$

Downloaded from http://www.everyspec.com

Eq. 5-9 can be used to calculate R_1.

As is the case when the radius of curvature is measured by comparison to a template, radii that can be measured are limited to those very close to the radii of available test glasses. It is also possible to damage the optical surface through contact with the test glass; again, cleanliness is important. Prolonged handling of the optical surface and test glass can cause surface distortion from heat (Ref. 6). The precision obtainable with a test glass is limited by the operator's ability and by error in the test glass.

5.2.2.5 Autocollimator and Interferometer

The application of an autocollimator and interferometer to measure radius of curvature is similar to using a microscope and lens bench, but higher orders of precision can be obtained with the autocollimator and interferometer (Ref. 5). The autocollimator is positioned first at the radius of curvature of the surface and then at the apex of the surface by moving either the autocollimator or the surface. Wave fronts at these points are measured, and the motion of the surface between the points is traced with a distance-measuring interferometer to measure the radius to within a few parts per million. The error incurred by not positioning the surface precisely at the apex or radius of curvature can be compensated for by using the wave front and numerical aperture at each position. The axial focus error for each position is calculated from the wave front measurement, and the true radius R is found as (Ref. 4)

$$R = R_m + \delta_2 - \delta_1, \text{ in.} \tag{5-10}$$

where

R_m = measured radius of curvature, in.

$\delta_i = \xi_i/[(NA)_i]^2$, in.^{2}

ξ_i = focus error determined from ith wave front measurement, in.

$(NA)_i$ = numerical aperture of ith collimator or surface position, dimensionless.

The ambient parameters are important to the precision of this measurement because they affect the laser wavelength. Temperature is particularly important, and most measuring instruments are calibrated at 68°F. Long-term deviations of a few degrees from this temperature can be compensated for, but rapid excursions from it can produce unpredictable transients and gradients. The human body and the polishing process are two sources of heat that can deform the optical component. Enough time in a stable environment must be allowed to establish thermal equilibrium.

5.2.2.6 Interferometer

The interferometer system described in par. 4.2.4 can be used to measure the radius of curvature of either a concave or convex surface. The center of curvature of the test surface is interferometrically made to coincide with the focus of the spherical wave that emanates from the transmission sphere, which produces a reflected reference wave front and a transmitted measurement wave front (Ref. 7). This arrangement, illustrated in Fig. 5-9(A), provides information about the precise location of the center of curvature of the test surface with respect to the focus of the transmission sphere. The surface under test is then moved along the optical axis of the interferometer until the surface under test coincides with the focus of the spherical wave from the transmission sphere, as illustrated in Fig. 5-9(B) (Ref. 7). Again the fringe pattern provides a very sensitive indicator of the point at which the surface coincides with the focus. The radius of curvature of the surface under test is the distance the surface is moved. Fig. 5-9(C) illustrates the equivalent radius measurement setup for a convex surface (Ref. 7).

The accuracy to which radius of curvature of a high-quality spherical surface can be determined is a function of (Ref. 7)

1. R/number, i.e., the radius of curvature divided by the clear aperture, of the surface under test
2. Accuracy of judging fringe straightness
3. Resolution and accuracy of the radius slide readout.

Downloaded from http://www.everyspec.com

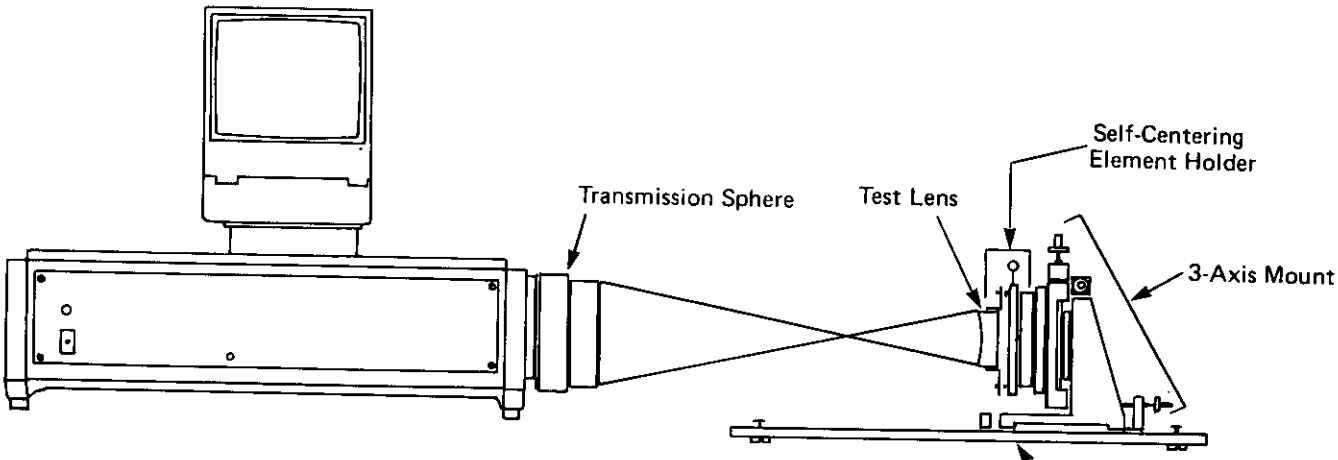

(A) Test Lens Center of Curvature Coincides With Focus of Light From Transmission Sphere

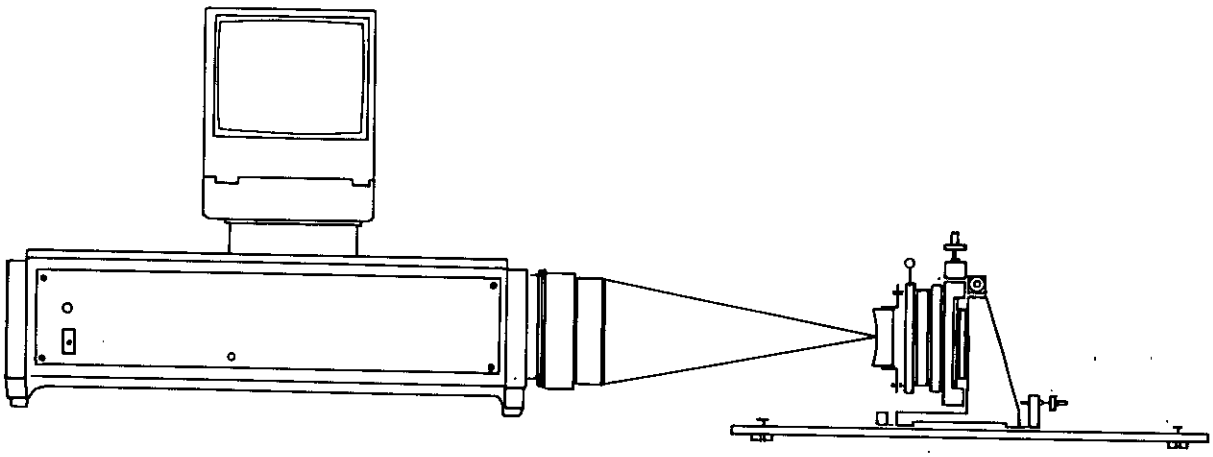

(B) Test Lens Surface Coincides With Focus of Light From Transmission Sphere

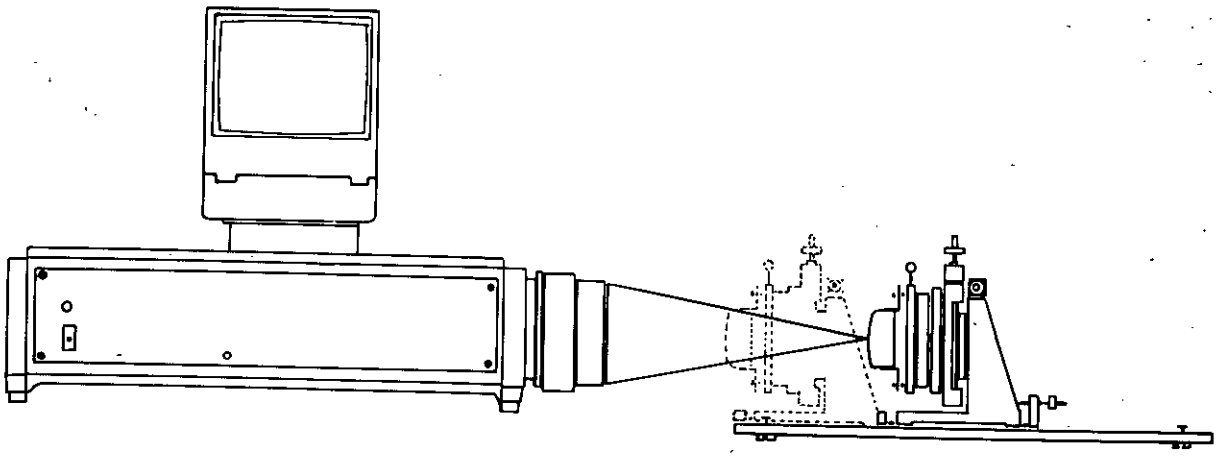

(C) Test Setups for Convex Surfaces

From the *Operation Maintenance Manual and Warranty* for the Zygo Interferometer System. © 1978 by the Zygo Corporation, Middlefield, CT.

Figure 5-9. Test Setups for Radius of Curvature Measurement With an Interferometer System

Downloaded from http://www.everyspec.com

If the ability to judge fringe straightness to within 1/10 fringe is assumed, Fig. 5-10 provides the accuracy of radius measurement as a function of the R/number of the surface under test. For example, an $R/1.5$ surface can be measured to 1 μm and an $R/7$ surface to 25 μm (Ref. 7).

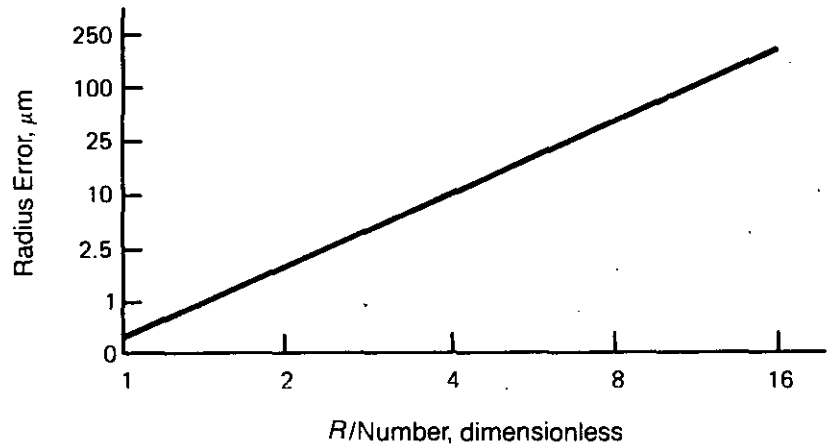

From the *Operation Maintenance Manual and Warranty* for the Zygo Interferometer System. © 1978 by the Zygo Corporation, Middlefield, CT.

Figure 5-10. Accuracy of Radius Measurement

5.2.3 THICKNESS

The thickness of a lens or plate can be measured to an accuracy of ±0.0004 in. with micrometers or dial gages (Ref. 5); however, these instruments might scratch the surface and, therefore, are not recommended. The accuracy can be increased by an order of magnitude to ±0.00004 in. when a Michelson interferometer is used to compare the component to a reference plate with approximately the same thickness and the same optical material (Ref. 5). When the measurement is made, the two end mirrors of the dispersion-compensated Michelson interferometer are replaced by the component to be tested and the reference plate. Fig. 5-11 illustrates the setup of the Twyman-Green form of the Michelson interferometer. Light from aperture a_1 is collimated by lens L_1 and split into two beams by beam splitter B_1. The two resultant beams travel to the end mirrors M_1 and M_1 and are reflected at normal or near normal incidence so that they return to B_1 and form two recombined beams that travel via L_1 and L_2, respectively, and are brought to focus at a_1 and a_2. Observation of the interference effects is usually made at a_2 (Ref. 8).

5.2.4 ANGLES

An angle is the figure formed by two lines extending from the same point or by two surfaces diverging from the same line. Angle measurement of optical components is accomplished by the use of divided circles and comparison standards.

5.2.4.1 Divided Circles (Refs. 4 and 5)

The simplest form of a divided circle is the protractor, which consists of part of an angular scale or a complete circle divided into degrees. Readings accurate to 0.1 deg can be made with a vernier scale.

Goniometers or precision spectrometers, as shown in Fig. 5-12, are more precise devices that use a complete circle. An accuracy of 1 sec or smaller can be attained but depends on the care expended when the circle is divided and the readout systems are devised. A goniometer is particularly useful for measuring prisms of acute angles that are truncated at the pointed end.

Downloaded from http://www.everyspec.com

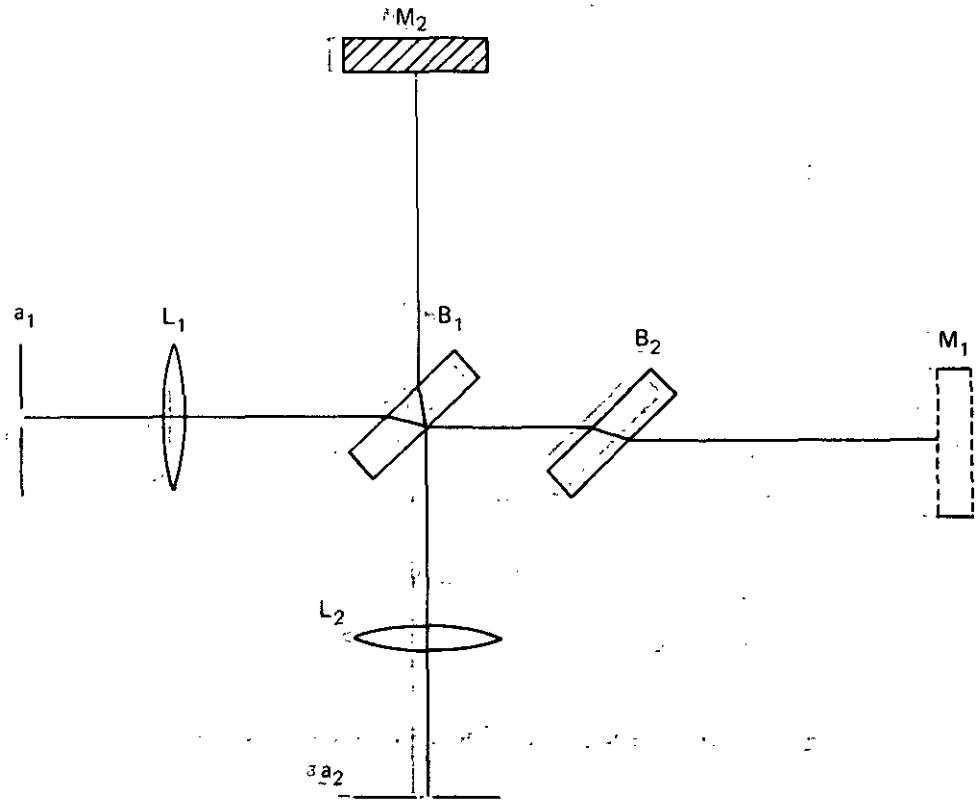

From *Applied Optics and Optical Engineering* by K.M. Baird and G.R. Hanes. © 1965 by Academic Press, Orlando, FL.

Figure 5-11. Twyman-Green Form of Michelson Interferometer

Instruments are available with two automatic autocollimators for simultaneously viewing diametrically opposite circle graduations. These instruments automatically compensate for any error in centering the optical component between the autocollimator.

5.2.4.2 Comparison Standards

Angles are frequently measured by comparison to standard angles fabricated from metal or glass to high precision (Ref. 5). Comparison can be made with an autocollimator or an interferometer. An autocollimator with a scale graduated to 0.004 in. can be used to obtain an accuracy of measurement of ±6 sec; however, this accuracy can be increased by an order of magnitude if an automatic autocollimator is used.

To make the comparison with an interferometer, a Twyman-Green interferometer can be used (Ref. 5). The optical component and the standard are placed together in one arm of the interferometer and are adjusted so no fringes cross the plane separating them. They are then rotated together, with care taken not to move one relative to the other, so the fringes on the standard are parallel to the separating plane. The angle error ξ_a in the component is proportional to the number of fringes n that cross the separating plane (Ref. 5) and is given by

$$\xi_a = \frac{n\lambda}{2S}, \text{ dimensionless} \qquad (5\text{-}11)$$

where

λ = wavelength of light, in.

S = length of side of an optical component, in.

Downloaded from http://www.everyspec.com

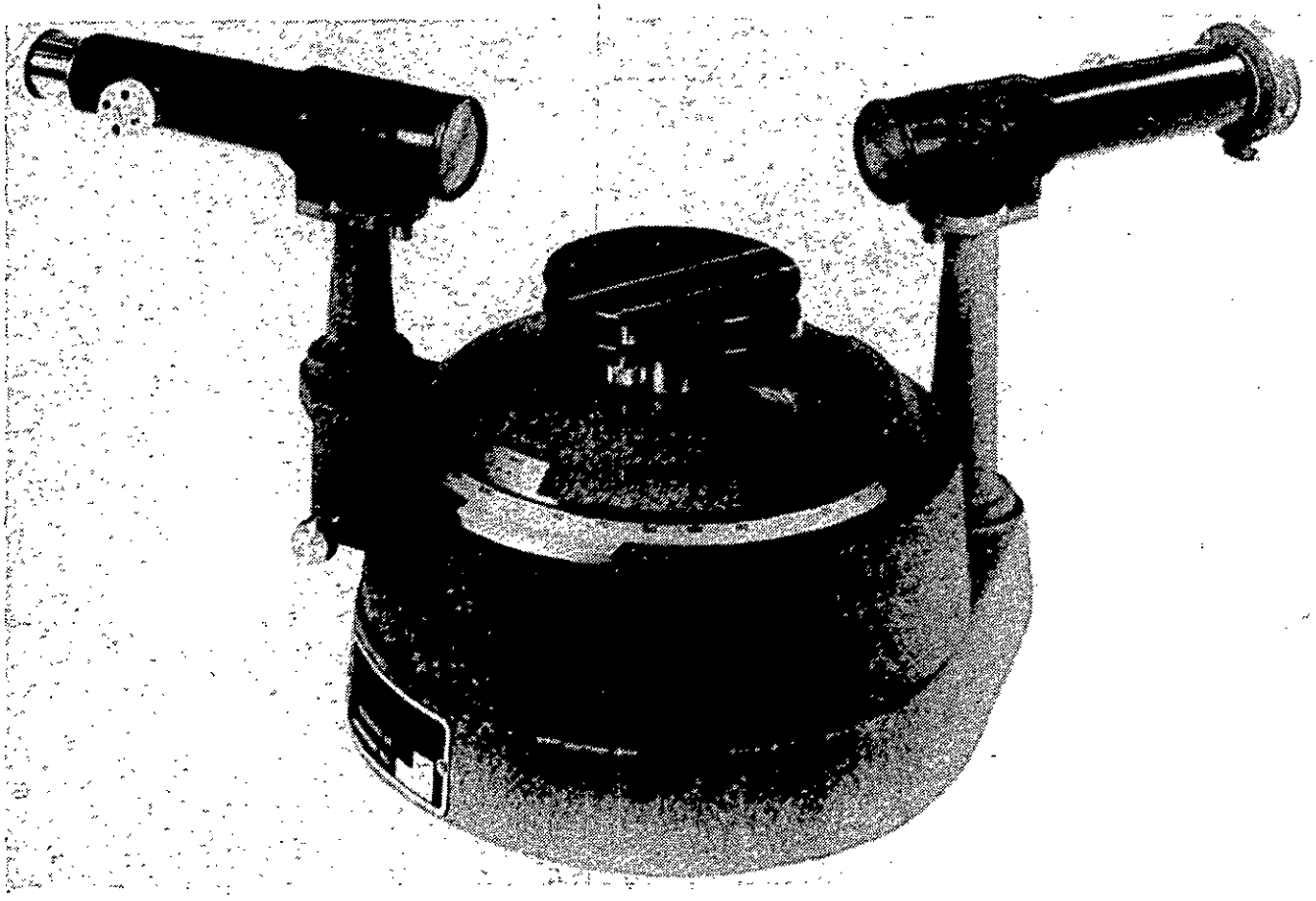

Figure 5-12. Precision Spectrometer

5.2.5 OPTICAL COATING THICKNESS

The multiple beam interferometer is used frequently for measuring the thickness of thin films (Ref. 2). The principles that follow are associated with a method by S. Tolansky that has been applied to many different types of thickness measurements.

Fig. 5-13 illustrates the preferred arrangement to measure thicknesses of thin films by using multiple beam fringes formed by reflection (Ref. 1). A micrometer eyepiece, containing any suitable reticle, is needed to measure fringe widths and the fringe shifts that occur at the edge of a film deposited upon surface S_1 and covered with a uniform coating of, for example, silver, as illustrated in Fig. 5-14. Evaporated coatings of silver and other metals produce a sharp step, the height of which equals the film thickness. The evaporated overcoating must be sufficiently opaque so the phase changes on reflection at S_1 are not changed by the presence of the substrate or the film. The optically flat surface S_3 must be placed in close contact with surface S_1 to obtain reliable measurements of the film thickness. As shown in Fig. 5-13, the usual practice is to lay plate P_1 directly upon plate P_2 after the operator has insured that no large dust particles are present to increase separation between the silvered surfaces. It is good practice to make the fringes approximately perpendicular to the edge AB as in Fig. 5-15.

The film thickness t is calculated as follows (Ref. 2)

$$t = \left(\frac{\Delta x}{2Nh}\right)\lambda, \mu\text{in.} \qquad (5\text{-}12)$$

where

N = refractive index of plate P_1, dimensionless

Downloaded from http://www.everyspec.com

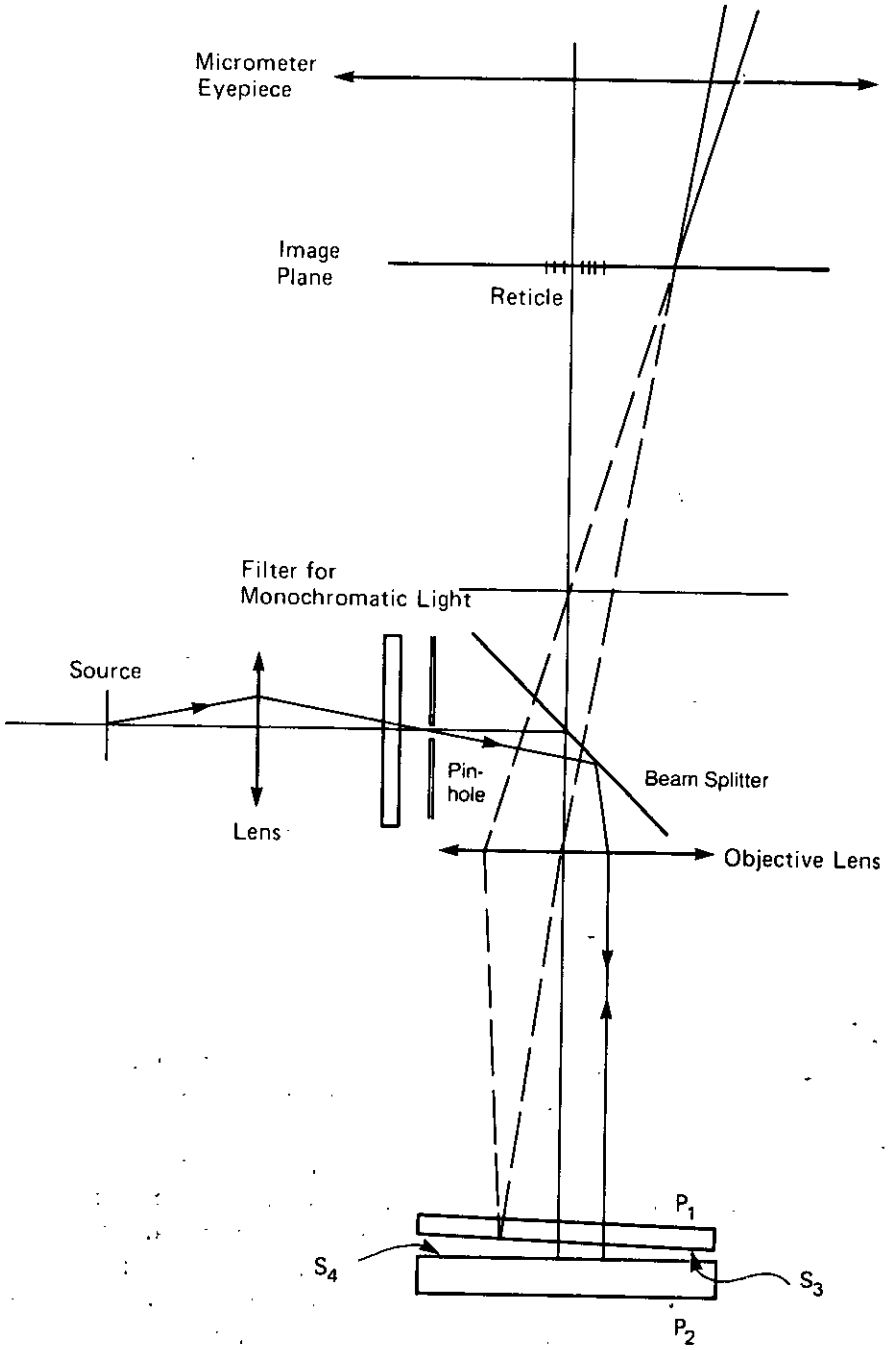

Figure 5-13. Arrangement for Measuring Thickness of Thin Films

Δx = fringe shift determined with the aid of micrometer eyepiece, μin.
h = fringe width determined with the aid of micrometer eyepiece, μin.

It is presumed that t is so small that the fringe shift is less than one fringe width. This method, however, is not well suited to measure thicknesses for which the fringe shifts Δx exceed the fringe width h.

The attainable precision is restricted by the roughness of the polished glass surfaces that ordinarily serve as the reflectors. The range in peaks and valleys of these surfaces is between 0.039 and 0.236 μin. in height and depth. Correspondingly, the sharp fringes will not remain straight under increasing magnification but will

Downloaded from http://www.everyspec.com

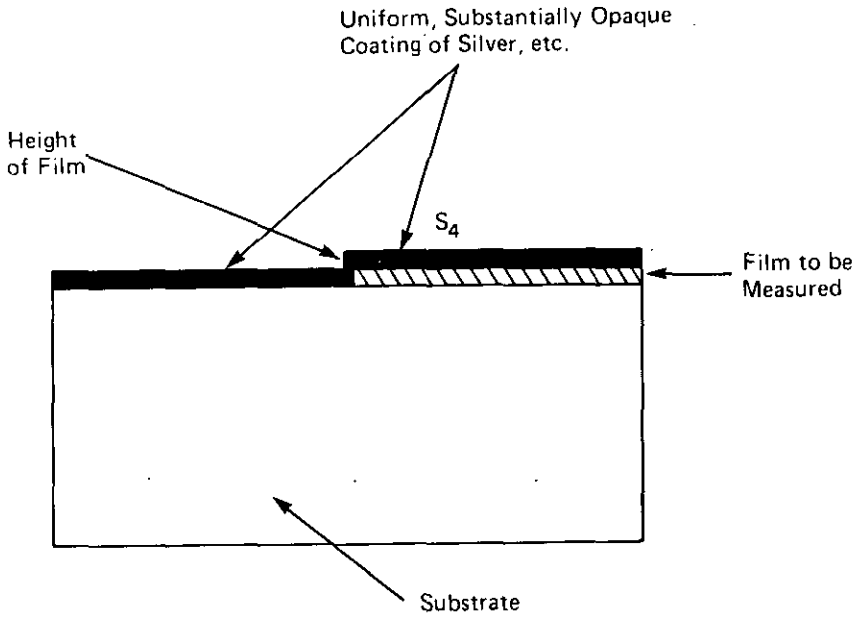

Figure 5-14. Method of Preparing Sample Film for Thickness Measurement in Multiple Beam Interferometer

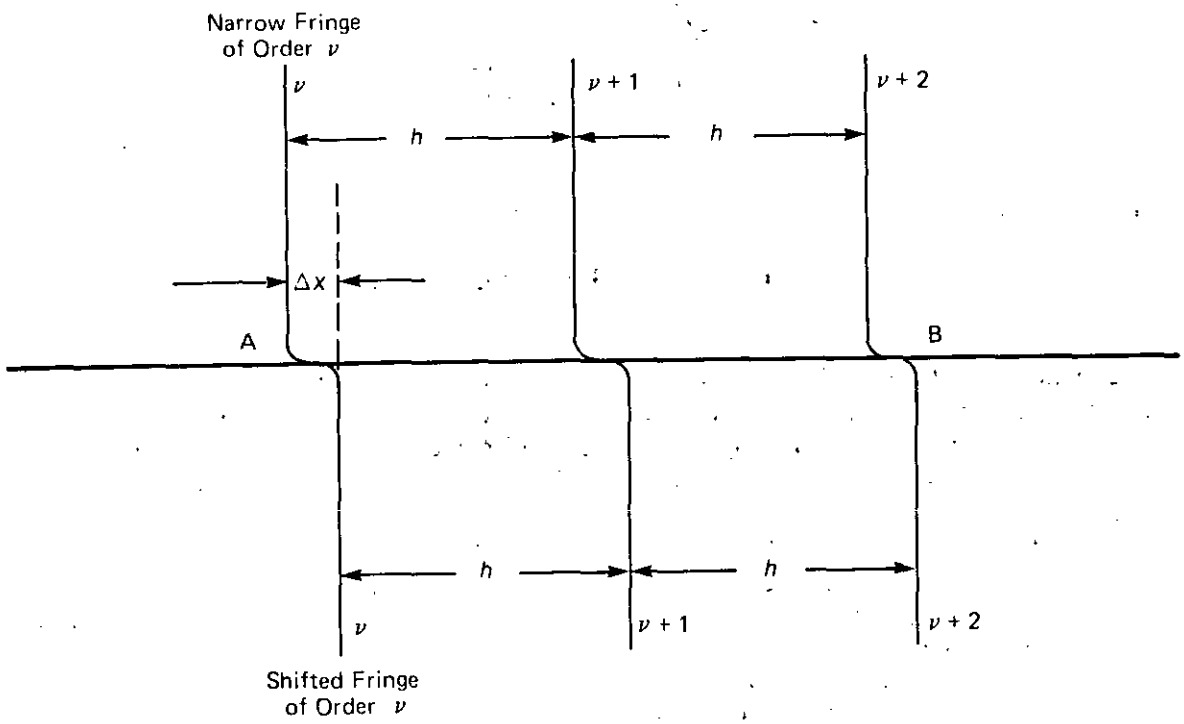

Figure 5-15. Appearance of Narrow Fringes When Thickness of Film Is a Small Fraction of a Wavelength and Film Occupies Portion Below Edge AB

Downloaded from http://www.everyspec.com

become so irregular as to be difficult to read. The irregular fringes are valuable for comparing different methods of polishing and molding the surfaces of optical elements.

The ellipsometer can be used to measure the thickness of oxide films to a few thousandths of a wavelength (Ref 8). Fig 5-16 is a schematic representation of the ellipsometer. "... the light source, not shown, illuminates the collimator through the pinhole. The light, in general, should be monochromatic. The pinhole must be limited in size to maintain the necessary collimation for best work. From the collimator lens the beam passes through a polarizer, which is provided with a graduated circle, and through a quarter-wave plate or Soleil compensator having its own graduated circle.

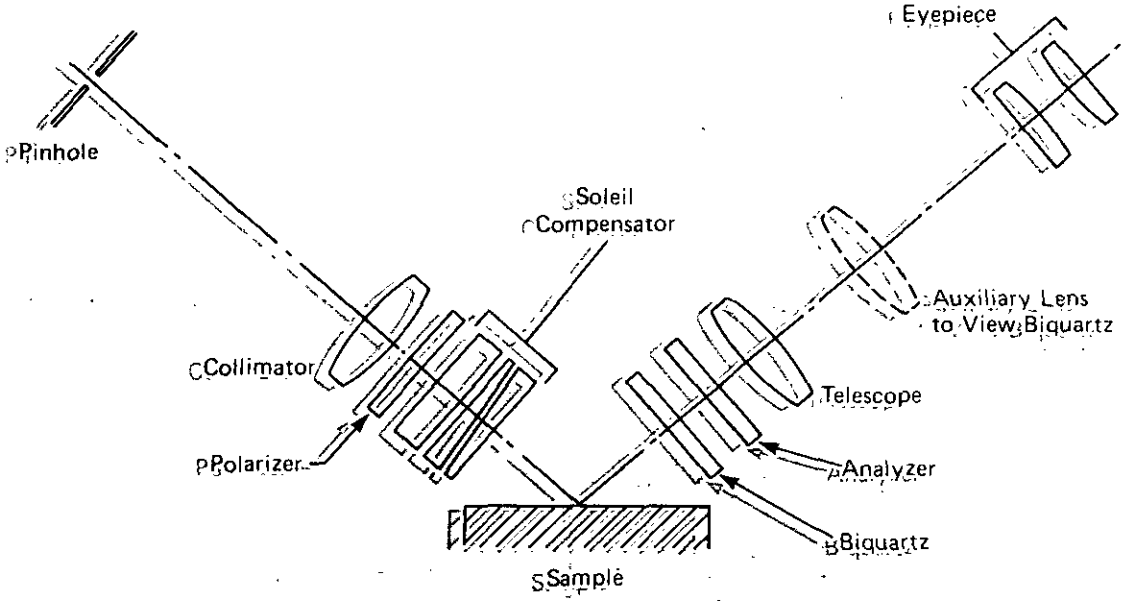

From *Applied Optics and Optical Engineering*, by K. M. Baird and G. R. Hanes © 1965, by Academic Press, New York, NY.

Figure 5-16. Ellipsometer (Ref 8)

"After reflection from the sample, the light passes to the analyzer. Before the analyzer may be placed some half-shade device, either a half-wave plate over half the aperture or a biquartz. A lens system may by appropriate alterations form either an image of the half-shade device or an image of the pinhole in the eyepiece. Both collimator and telescope are rotatable about the center of the sample surface, each with a graduated scale." (Ref 8).

Military Specification MIL-C-675, *Coating of Glass Optical Elements (Antireflection)* (Ref 9), establishes minimum optical and durability requirements for magnesium fluoride interference films used as antireflection coatings on optical materials. The conditions for no surface reflection of monochromatic light are that the refractive index of the coating should be the square root of the refractive index of the optical material and that its optical thickness should be one quarter of the wavelength of the light (Ref 6). Under film thickness, MIL-C-675 specifies that the coating shall have a quarter-wave optical thickness *QWOT* between 0.45 μm and 0.60 μm unless otherwise specified on the component drawing or procurement document (Ref 9). The *QWOT* is given by

$$QWOT = 4Nt, \mu m \qquad (5\text{-}13)$$

Downloaded from http://www.everyspec.com

where

N = refractive index of coating, dimensionless

t = physical thickness of coating, μm.

5.2.6 SURFACE QUALITY

No quantitative method exists for measuring optical component surface quality. There have been attempts, however, to quantify surface quality by measuring surface roughness or total integrated scatter.

Military Specification MIL-O-13830, *Optical Components for Fire Control Instruments, General Specification Governing the Manufacture, Assembly, and Inspection of* (Ref. 10), defines surface defects, i.e., scratches and digs, and specifies surface quality requirements in terms of scratches and digs for various types of optical components such as lenses, prisms, and mirrors.

A scratch is defined as any marking or tearing of the surface (Ref. 10). Scratch types are identified as:

1. Block reek: Chain-like scratch produced in polishing.
2. Runner-cut: Curved scratch caused by grinding.
3. Sleek: Hairline scratch.
4. Crush or rub: Surface scratch or a series of small scratches usually caused by mishandling.

A dig is defined as a small, rough spot on the surface similar to pits in appearance and usually caused by mishandling (Ref. 10).

5.3 SOFT MATERIAL

5.3.1 ELASTOMERIC MATERIALS

The thickness of rubber and elastomeric materials can be measured by beta backscatter and low-frequency ultrasonic techniques. The beta backscatter method operates on the principles that follow. Whenever a material is irradiated with beta particles, a fraction of the electrons may be reflected or backscattered. The intensity of the backscattered radiation is proportional to the thickness of the material until the thickness equals approximately one fifth of the range of the electrons. The thickness beyond which increasing thickness does not increase backscattered radiation is known as infinite thickness, and it is a function of the atomic number of the material and the beta particle energy. At this thickness the most energetic beta particles do not possess sufficient energy to penetrate the material and return to the detector. If a second layer of material having a different atomic number is placed upon the first material, the intensity of backscattered radiation will change proportionately to the thickness of the second material. The greater the difference in atomic number between the two materials, the greater the sensitivity of the measurement (Ref. 11). The equivalent atomic number of elastomeric or rubber materials should be assumed to be close to six to identify a suitable substrate (Ref. 12). This method is particularly well suited to the in-process measurement of rubber and elastomeric materials passing over metal rolls.

As a rule, beta backscatter measurements are less precise and accurate than are radioisotope measurements, which generally are accurate to within ±1% (Ref. 13).

Ultrasonic thickness measurements of rubber and elastomeric materials employ the pulse echo time-modulated measurement method. In this method the echoes returning from various boundaries in the gaged part are timed. A known or assumed velocity is used to determine the distance (thickness) the sound has traveled. Because of the low acoustic impedance of rubber and elastomeric materials, low-frequency (0.5 or 1.0 MHz) transducers are used. Ultrasonic methods are difficult to use on materials with inhomogeneities, e.g., steel-reinforced tires.

The accuracy of ultrasonic thickness measurements normally ranges from 0.1% to 1% of nominal thickness. The equipment must be calibrated daily on a standard made of the same material as the product being measured. The equipment also must be recalibrated when a different transducer is used.

5.3.2 FABRIC

5.3.2.1 Thickness

The beta backscatter technique of thickness measurement is discussed in par. 5.3.1. When the thickness of fabric is measured, the equivalent atomic number of fabric should be assumed to be close to 6 for choosing a

Downloaded from http://www.everyspec.com

suitable substrate (Ref. 12). The greater the difference in the atomic numbers of the two materials, the greater the sensitivity of the measurement (Ref. 11).

A presser foot and anvil can be used to measure fabric thickness (Ref. 14). Under this test the distance between two parallel planes—presser foot and anvil—is measured when they are separated by the cloth to which a known pressure is being applied and maintained. The presser foot diameter should be at least five times the thickness of the cloth and subject to the constraint that the area of the foot should not be less than 0.25 in.^{2} and not greater than 16 in.^{2} Recommended presser foot areas include (Ref. 14) 0.25 in.^{2}, 1.0 in.^{2}, 2.0 in.^{2}, 8.0 in.^{2}, and 16.0 in.^{2}.

It is recommended that a pressure of 0.1 lb/in.^{2}, 1.0 lb/in.^{2}, or 10.0 lb/in.^{2} be specified (Ref. 14).

The test specimen should be free of creases. No attempt should be made to flatten a crease because this attempt may affect the result of the measurement. The test specimen should be conditioned as described in American National Standards Institute/American Society for Testing and Materials (ANSI/ASTM) D 1776, *Standard Practice for Conditioning Textiles for Testing* (Ref. 15). Briefly, samples or specimens are brought to a relatively low moisture content in the special atmosphere for preconditioning, i.e., a relative humidity of 10 to 25% and a temperature not over 122° F, and subsequently are brought to moisture equilibrium for testing in the standard atmosphere for testing, i.e., a relative humidity of 65 ± 2% and temperature 70 ± 2° F. Test equipment and procedures are described in detail in Ref. 15.

The instrument used to make the measurement should have a frame sufficiently rigid to insure that no measurable deflection occurs under the loads to be used. The presser foot should be circular, and both the presser foot and anvil should be plane and parallel. The edges of the anvil should extend at least 1 in. beyond the edges of the presser foot when they are in contact. The relative movement of the presser foot and anvil should occur along the normal drawn through the centers of the plates.

A dial indicator can be used to make the measurement. It should be capable of measuring to an accuracy of 1% for fabrics over 0.005 in. in thickness and to 0.00005 in. for fabric under 0.005 in. in thickness. This capability will require a highly accurate dial indicator.

Before measurements are made the surfaces of the anvil and foot should be cleaned, the pressure should be set as prescribed by the material specification, and the gage should be set to zero. The conditioned fabric should be placed in contact with the anvil without tension. When the measurement is made, the distance between presser foot and anvil should be reduced at a rate of about 0.002 in./sec until contact is made with the fabric. The thickness reading should be taken after expiration of the time prescribed in the material specification. If no time is specified, experiments should identify a time of such duration that no appreciable change in fabric thickness is indicated by the instrument during the lapse of a further 20% of that time.

At least 10 measurements should be made with different samples or with different places on the same sample being tested. The thickness should be expressed as the mean of all of the tests, and the size of presser foot, the pressure used, and the length of time the foot was applied should be stated.

5.3.2.2 Woven Fabric Length and Width

ASTM Method D 3773, *Standard Test Methods for Length of Woven Fabric* (Ref. 16), defines fabric length as the distance from one end of a fabric to the other measured parallel to the selvage while the fabric is under zero tension and is free of folds or wrinkles.

ASTM Method D 3774, *Standard Test Methods for Width of Woven Fabric* (Ref. 17), defines fabric width as the distance from the outer edge of one selvage to the outer edge of the other selvage measured perpendicular to the selvages while the fabric is held under zero tension and is free of folds and wrinkles.

The test specimen should be conditioned as described in ANSI/ASTM D 1776, *Standard Practice for Conditioning Textiles for Testing* (Ref. 15), before length or width is measured.

ASTM Method D 3773 (Ref. 16) presents four options, i.e., the hand, drum, clock, and folding methods, for measuring fabric length. The hand method is the referee method to which all other methods should be compared to establish their accuracy. This method calls for the use of a 1-yd minimum length steel tape or stick graduated in 1/16-in. units to measure the fabric when it is laid flat (without tension and free of folds or wrinkles) to the nearest 1/16 in. ASTM Method D 3773 describes the test apparatus, sample lot, and test procedure for each of the four options. The precision of the procedures has not been established.

Downloaded from http://www.everyspec.com

ASTM Method D 3774 (Ref. 17) presents two options for measuring fabric width. The first option includes two procedures for measuring fabric in full rolls or bolts, and the second covers the procedure when only a short length of fabric is available. In summary, the width is measured to the nearest 1/16 in. by a measuring stick or steel tape with 1/16-in. graduations. When a full bolt or roll of fabric is available, at least five measurements are made, and the average is calculated. Method D 3774 describesthe uses, test apparatus, and test procedure for each option. The precision of the procedures has not been established.

5.3.3 PAPER

Paper thickness can be measured by beta backscatter techniques. Beta backscatter thickness measurements are discussed in par. 5.3.1. The equivalent atomic number of paper should be assumed to be close to six to identify a suitable substrate (Ref. 12). The greater the difference in the atomic numbers of the two materials, the greater the sensitivity of the measurement (Ref. 11).

5.3.4 THREADS

Thread diameter can be measured by the projection method and the Eberhardt fine thread measurement method. Each method is discussed.

5.3.4.1 Projection Method

When yarn diameter is measured with the Shirley Yarn Diameter Projector, illustrated in Fig. 5-17, an image, of a short length of the yarn is projected onto the ground glass scale, where the image width is measured. This method gives an estimate of yarn diameter exclusive of outstanding fibers. The variability of results is a measure of yarn irregularity.

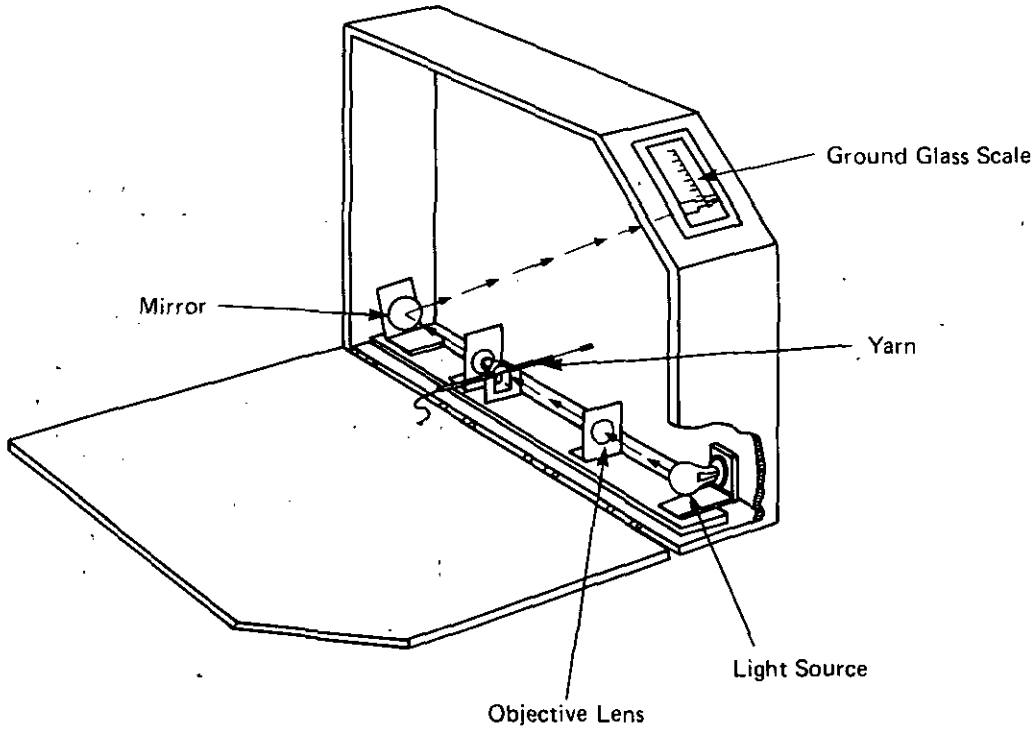

Extracts from Handbook 11 are reproduced by permission of the British Standards Institution. Complete copies can be obtained from BSI at Linford Wood, Milton Keynes, England, MK14 6LE.

Figure 5-17. Shirley Yarn Diameter Projector

Downloaded from http://www.everyspec.com

The projection method is unsuitable for yarns that are not approximately circular in cross section. It also can give misleading results when applied to staple fiber yarns with exceptionally low twist and to continuous filament rayon yarns, both of which become tape-like when passed over a yarn guide.

Prior to measurement it is desirable to condition yarn as specified in ANSI/ASTM D 1776 (Ref. 15). Briefly, the standard atmosphere for testing is 65 ± 2% relative humidity and 70 ± 2° F temperature. ANSI/ASTM D 1776 contains detailed descriptions of test equipment and procedures.

When yarn diameter is measured, at least five packages of the yarn should be tested in sufficient quantities to give a total of 200 readings in approximately equal numbers for each package and at an average interval of about 1 ft. Each package should be mounted so the yarn can be drawn off freely in the normal manner, i.e., either overend or sideways, and passed through a light drag, such as a small ball drag, before it is threaded through the copper guide tubes of the yarn projector from the right-hand side. The free end of the yarn should be passed through the disc drag at the left side of the instrument.

The yarn is drawn through by the left hand and the scale adjusted by the right hand so the lower edge of the yarn image coincides with zero. The reading at the upper edge is taken to the nearest 0.001 in. Only the solid body of the yarn is measured; fibers standing off the yarn are ignored. Diameters are measured at 200 randomly spaced places in the yarn. Six to 18 in. of the yarn should be drawn through the instrument, and the diameter measured at the point where the yarn stops regardless of whether it is a very thick or very thin place.

The mean diameter is computed from the 200 measurements to the nearest 0.001 in. The measurements should be divided into groups of 10, and the range in each group computed. Next the mean range is calculated. Then an estimate of the standard deviation E_d, expressed in percent of the diameter, is calculated:

$$E_d = \left(\frac{r_m}{d_m \times 3.083}\right) 100, \% \qquad (5\text{-}14)$$

where

r_m = mean range, in.,
d_m = mean diameter, in.

A potential major source of error in the projection method is introduced by the observer who makes the measurement. Personal error is involved when the amount of extraneous fiber is estimated. Therefore, to insure consistency, yarns that are to be compared should be measured by the same observer.

5.3.4.2 Eberhardt Fine-Thread Measurement Method

The Eberhardt fine-thread measurement method is based on the principle of optical diffraction (Ref. 13). Fig. 5-18 shows a schematic drawing of this type of thread-measuring device. The light source is monochromatic and is polarized in some cases. The thread being gaged is contained in a lighttight cylindrical box, surrounded by 35-mm photosensitive film that forms an almost complete circle of about a 1-in. radius around the thread. Upon properly timed exposure, numerous black lines appear on the film. The line pattern is a function of the diffraction pattern of the material and the wavelength of light used. If the wavelength is kept constant, the number of interference maxima and minima is directly proportional to thread diameter. Through comparison of the number of minima obtained with the test thread to the number obtained with a standard, the thickness of very fine thread can be determined continuously without destruction of the sample.

The Eberhardt fine thread test is applicable for threads between 0.5 and 10 μin. in diameter with an accuracy of ±4%. For routine tests a nomogram added to Eberhardt's paper can be used (Ref. 13).

5.4 SURFACE TEXTURE

ANSI B 46.1, *Surface Texture: Surface Roughness, Waviness and Lay*, (Ref. 18), is concerned with the geometric irregularities of surfaces of solid materials, physical specimens for gaging roughness, and characteristics of stylus instrumentation for measuring roughness. It presents the following definitions of terms related to the surfaces of solid materials:

Downloaded from http://www.everyspec.com

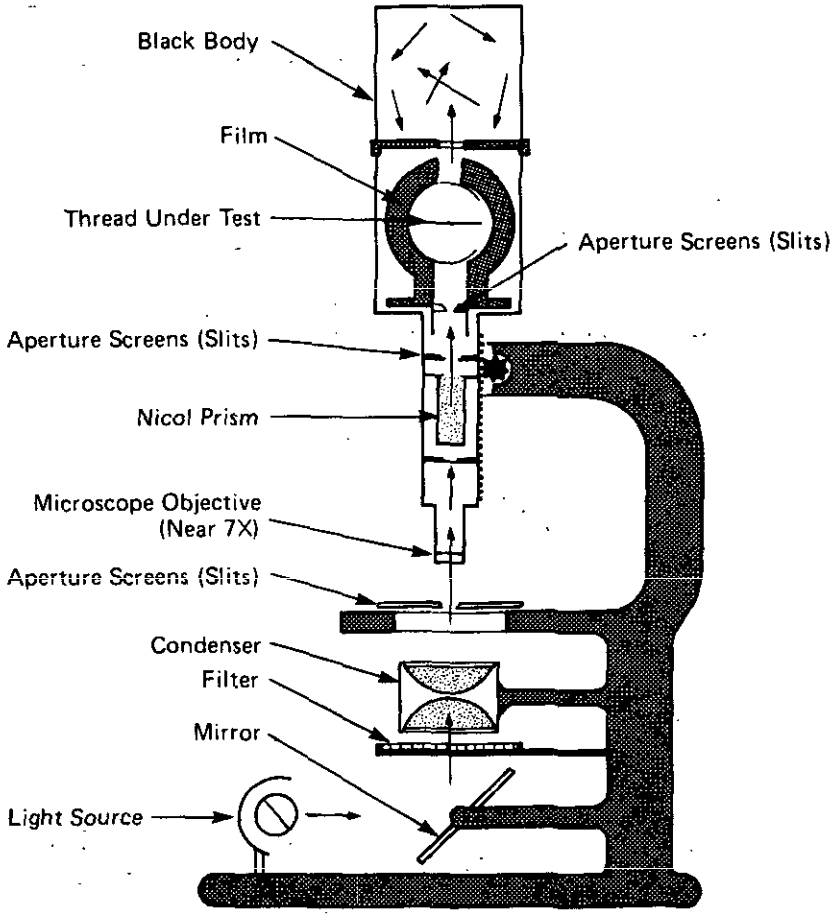

Figure 5-18. Schematic Drawing of Eberhardt Fine Thread Measuring Device

1. "*Surface*. The surface of an object is the boundary which separates that object from another object, substance, or space."

2. "*Nominal Surface*. The nominal surface is the intended surface contour, the shape and extent of which is usually shown and dimensioned on a drawing or descriptive specification."

3. "*Measured Surface*. The measured surface is a representation of the surface obtained by instrumental or other means."

4. "*Surface Texture*. Surface texture is the repetitive or random deviations from the nominal surface which form the three-dimensional topography of the surface. Surface texture includes roughness, waviness, lay, and flaws. Figure . . . [5-19] is an example of a unidirectional lay. Roughness and waviness parallel to the lay are not represented in the expanded views."

5. "*Roughness*. Roughness consists of the finer irregularities of the surface texture, usually including those irregularities which result from the inherent action of the production process. These are considered to include traverse feed marks and other irregularities within the limits of the roughness sampling length."

6. "*Waviness*. Waviness is the more widely spaced component of surface texture. Unless otherwise noted, waviness is to include all irregularities whose spacing is greater than the roughness sampling length and less than the waviness sampling length. Waviness may result from such factors as machine or work deflections, vibration, chatter, heat treatment, or warping strains. Roughness may be considered superimposed on a 'wavy' surface."

7. "*Lay*. Lay is the direction of the predominant surface pattern, ordinarily determined by the production method used."

Downloaded from http://www.everyspec.com

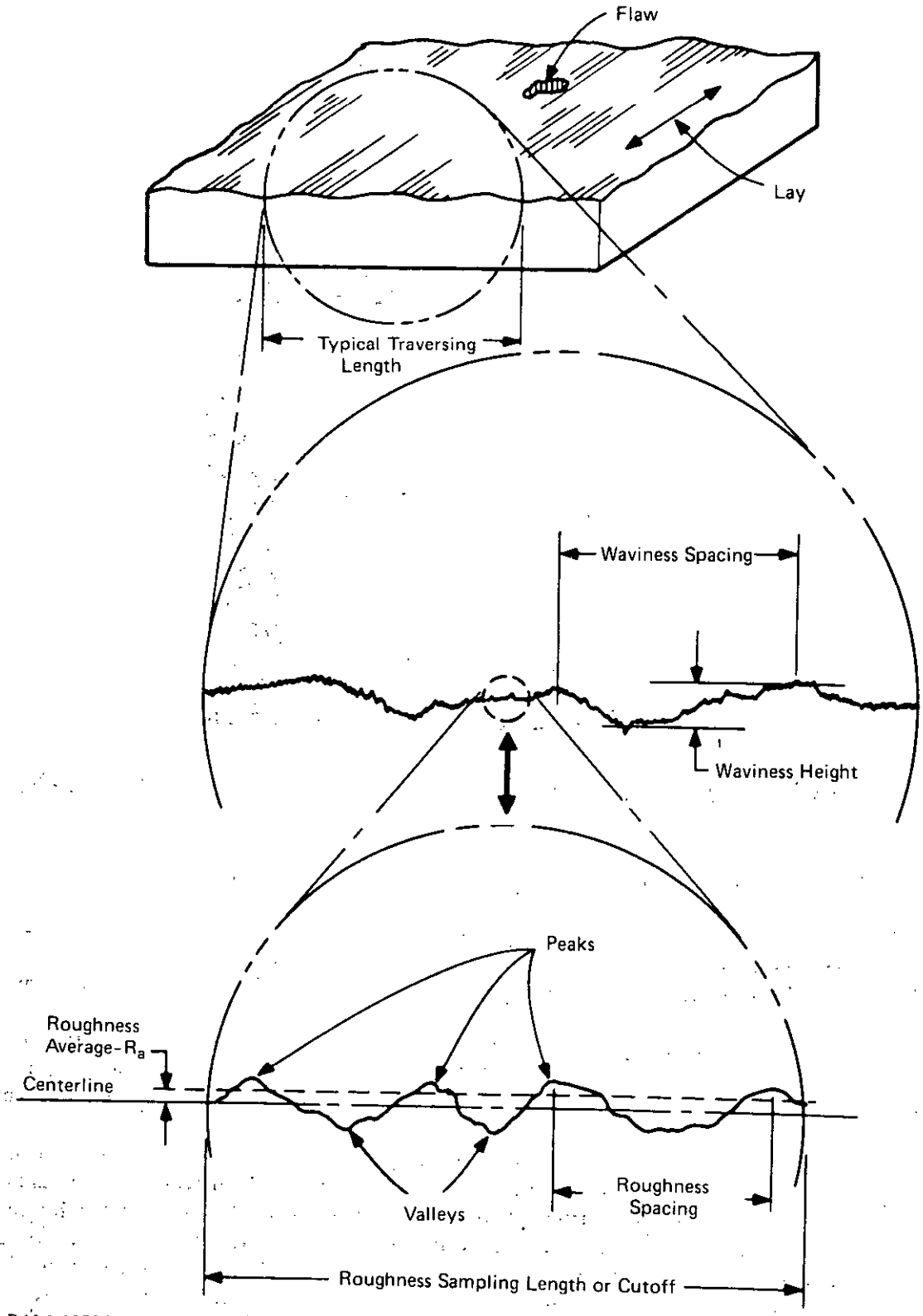

From ANSI B46.1-1978, *Surface Texture: Surface Roughness, Waviness and Lay.* © 1978 by The American Society of Mechanical Engineers, New York, NY.

Figure 5-19. Pictorial Display of Unidirectional Lay Surface (Ref. 18)

Downloaded from http://www.everyspec.com

8. "*Flaws.* Unintentional irregularities which occur at one place or at relatively infrequent or widely varying intervals on the surface. Flaws include such defects as cracks, blowholes, inclusions, checks, ridges, and scratches, etc. Unless otherwise specified, the effect of flaws shall not be included in the roughness average measurements. Where flaws are to be restricted or controlled, a special note as to the method of inspection should be included on the drawing or in the specifications."

9. "*Error of Form.* The error of form is considered as being that deviation from the nominal surface which is not included in surface texture".

ANSI B 46.1 (Ref. 18) covers arithmetic average specifications of surface roughness as determined with tracer-type instruments by using stylus tracers and electrical signal processing and amplification, which represent the majority of instruments presently used to measure surface roughness. Material presented in Ref. 18 includes the definition of terms related to the measurement of surface texture, designation of surface characteristics, stylus-type instruments (tracer head characteristics, traversing length, long wavelength cutoff, indicating device, instrument accuracy, and operational calibration), precision reference specimens (surface contour, nominal value, assigned value, accuracy, uniformity, waviness, assigned value calculation, ratings, and materials), and roughness comparison specimens (flaws, roughness average ratings, uniformity and accuracy, and pilot specimens).

Appendix C of Ref. 18 reviews optical (microscopy, interferometry, reflectance measurement, image analysis, and holography) and electron-optical (scanning and transmission electron microscopy) surface quality measurement methods and parameters.

5.5 COATING THICKNESS

Coatings addressed include organic finishes (paint, varnish, etc.) applied to produce the desired decorative and/or protective coating and electrodeposited coatings applied to metallic or suitably prepared nonmetallic bases to provide resistance to corrosion, special appearance such as color or luster, or increased dimensions. Electroplating is applied to steel, copper, brass, nickel-brass, zinc, zinc-base die castings, aluminum, and nonmetals—such as plastics—that have first been coated with an electrically conductive material. Plating materials commonly used include tin, cadmium, chromium, copper, gold, platinum, silver, and zinc.

The American Society for Testing and Materials has published several standard methods for measuring coating thickness, each of which uses commercially available instruments. The choice of measurement method depends on the type of coating and substrate. The ASTM standard methods include destructive methods—coulometric and cross section—and nondestructive methods—magnetic, beta backscatter, and X-ray spectrometry. These methods are presented in the paragraphs that follow.

5.5.1 COULOMETRIC METHOD

ASTM B 504, *Standard Method for Measurement of Thickness of Metallic Coatings by the Coulometric Method* (Ref. 19), is the standard for the coulometric method. Through this method—also known as the anodic solution or electrochemical stripping method—coating thickness is determined by measuring the quantity of electricity (coulombs) required to dissolve the coating anodically from a known and accurately defined area. In general, the range of this method is considered to be between 0.00003 and 0.002 in. Chromium coatings can be measured to 0.000003 in. Ref. 19 describes factors affecting the accuracy of the method, equipment calibration, the procedure for making measurements, and accuracy.

5.5.2 CROSS-SECTIONAL METHOD

ASTM B 487, *Standard Method for Measurement of Metal and Oxide Coating Thicknesses by Microscopical Examination of a Cross Section* (Ref. 20), is the standard for the cross-sectional method. When this method is applied, the specimen is cut so that the coating or oxide layer is not altered, and coating thickness is determined by microscopical examination of the cross section. An experienced metallographer is needed to attain accurate measurements by this method. Ref. 20 describes sampling, edge protection, mounting, preparation, etching, measurement, accuracy, and limit of resolution.

Downloaded from http://www.everyspec.com

5.5.3 MAGNETIC METHODS

Standard methods employing magnetic pull-off gages, magnetic flux gages, and eddy current instruments are presented in the following ASTM publications:

1. ASTM D 1400, *Standard Method for Nondestructive Measurement of Dry Film Thickness of Nonconductive Coatings Applied to a Nonferrous Metal Base* (Ref. 21)
2. ANSI/ASTM B 244, *Standard Method for Measurement of Thickness of Anodic Coatings on Aluminum and of Other Nonconductive Coatings on Nonmagnetic Basis Metals With Eddy Current Instruments* (Ref. 22)
3. ANSI/ASTM E 376, *Standard Recommended Practice for Measuring Coating Thickness by Magnetic Field or Eddy Current (Electromagnetic) Test Methods* (Ref. 23)
4. ASTM D 1186, *Standard Methods for Nondestructive Measurement of Dry Film Thickness of Nonmagnetic Coatings Applied to a Ferrous Base* (Ref. 24)
5. ANSI/ASTM G 12, *Standard Method for Nondestructive Measurement of Film Thickness of Pipeline Coatings on Steel* (Ref. 25)
6. ASTM B 499, *Standard Method for Measurement of Coating Thicknesses by the Magnetic Method: Nonmagnetic Coatings on Magnetic Basis Metals* (Ref. 26)
7. ASTM B 530, *Standard Method for Measurement of Coating Thicknesses by the Magnetic Method: Electrodeposited Nickel Coatings on Magnetic and Nonmagnetic Substrates* (Ref. 27).

Magnetic pull-off gages measure thickness through a spring calibrated to determine the force required to pull a permanent magnet from a ferrous base coated with a nonmagnetic film. The required force is inversely proportional to the thickness of the applied film. Magnetic flux gages are designed so variations in magnetic flux or magnetic attraction between the detection unit and the steel substrate can be calibrated to indicate the thickness of the coating material. Eddy current instruments measure the changes in apparent impedance of a coil that induces eddy currents into the basis metal. Variations in apparent impedance, produced by variations in coil to basis metal spacing, are calibrated to indicate coating thickness. All of the ASTM publications previously listed discuss instrument calibration, procedure, and accuracy. In addition, ANSI/ASTM B 244, ANSI/ASTM E 376, ASTM B 499, and ASTM B 530 discuss factors affecting measuring accuracy.

5.5.4 BETA BACKSCATTER

ANSI/ASTM B 567, *Standard Method for Measurement of Coating Thickness by the Beta Backscatter Method* (Ref. 12), is the standard for this method, which applies to both metallic and nonmetallic coatings on both metallic and nonmetallic substrates. It is based on the backscattering, which is basically a function of the atomic number of the material, of beta particles that impinge upon a material.

The beta backscatter method can be applied to a coated body if the atomic numbers of the coating material and the substrate are sufficiently different because the intensity of the backscatter will be between two limits--the backscatter intensity of the substrate and that of the coating—and will be proportional to the coating thickness. Ref. 12 describes instrumentation, factors affecting measuring accuracy, test procedure, and measuring precision and accuracy.

5.5.5 X-RAY SPECTROMETRY

ASTM B 568, *Standard Method for Measurement of Coating Thickness by X-Ray Spectrometry* (Ref. 28), is the standard for this method. The measurement is based on the combined interaction of the coating and substrate with incident radiation of sufficient energy to cause the emission of secondary radiations characteristic of the elements that compose the coating and substrate. The exciting radiation may be generated by an X-ray tube or by certain radioisotopes. This method can be used to determine the thickness of any metallic coating. Ref. 28 describes factors affecting accuracy, instrument calibration, and procedure.

Downloaded from http://www.everyspec.com

REFERENCES

1. F. W. Sears and M. W. Zemansky, *University Physics*, Addison-Wesley Publishing Company, Inc., Reading, MA, 1955.
2. MIL-HDBK-141, *Optical Design*, 5 October 1962.
3. W. J. Smith, *Modern Optical Engineering: The Design of Optical Systems*, McGraw-Hill Book Company, Inc., New York, NY, 1966.
4. D. F. Horne, *Optical Production Technology*, Crane, Russak and Company, Inc., New York, NY, 1972.
5. D. Malacara, Ed., *Optical Shop Testing*, John Wiley and Sons, Inc., New York, NY, 1978.
6. F. Twyman, *Prism and Lens Making*, Adam Hilger Ltd., London, England, 1942.
7. *Zygo Interferometer System. Operation Maintenance Manual and Warranty*, Zygo Corporation, Middlefield, CT, 1978.
8. Rudolph Kingslake, Ed., *Applied Optics and Optical Engineering*, Academic Press, New York, NY, 1965.
9. MIL-C-675C, *Coating of Glass Optical Elements (Antireflection)*, 22 August 1980.
10. MIL-O-13830A, *Optical Components for Fire Control Instruments, General Specification Governing the Manufacture, Assembly, and Inspection of*, 11 September 1963.
11. W. J. McGonnagle, *Nondestructive Testing*, McGraw-Hill Book Company, Inc., New York, NY, 1961.
12. ANSI/ASTM B 567-79A, *Standard Method for Measurement of Coating Thickness by the Beta Backscatter Method*, American Society for Testing and Materials, Philadelphia, PA, February 1980.
13. R. C. McMaster, Ed., *Nondestructive Testing Handbook*, The Ronald Press Company, New York, NY, 1959.
14. *Methods of Tests for Textiles (Including Colour Fastness Tests)* , B.S. Handbook No. 11, British Standards Institution, London, England, 1963.
15. ANSI/ASTM D 1776-79, *Standard Practice for Conditioning Textiles for Testing*, American Society for Testing and Materials, Philadelphia, PA, September 1979.
16. ASTM D 3773-79, *Standard Test Methods for Length of Woven Fabric*, American Society for Testing and Materials, Philadelphia, PA, June 1979.
17. ASTM D 3774-79, *Standard Test Methods for Width of Woven Fabric*, American Society for Testing and Materials, Philadelphia, PA, June 1979.
18. ANSI B 46.1-1978, *Surface Texture: Surface Roughness, Waviness and Lay*, American Society of Mechanical Engineers, New York, NY, 1978.
19. ASTM B 504-82, *Standard Method for Measurement of Thickness of Metallic Coatings by the Coulometric Method*, American Society for Testing and Materials, Philadelphia, PA, June 1982.
20. ASTM B 487-79, *Standard Method for Measurement of Metal and Oxide Coating Thickness by Microscopical Examination of a Cross Section*, American Society for Testing and Materials, Philadelphia, PA, April 1979.
21. ASTM D 1400-81, *Standard Method for Nondestructive Measurement of Dry Film Thickness of Nonconductive Coatings Applied to a Nonferrous Metal Base*, American Society for Testing and Materials, Philadelphia, PA, September 1981.
22. ANSI/ASTM B 244-79, *Standard Method for Measurement of Thickness of Anodic Coatings on Aluminum and of Other Nonconductive Coatings on Nonmagnetic Basis Metals With Eddy Current Instruments*, American Society for Testing and Materials, Philadelphia, PA, April 1979.
23. ANSI/ASTM E 376-69, *Standard Recommended Practice for Measuring Coating Thickness by Magnetic Field or Eddy Current (Electromagnetic) Test Methods*, American Society for Testing and Materials, Philadelphia, PA, October 1969 (Reapproved 1979).
24. ASTM D 1186-81, *Standard Methods for Nondestructive Measurement of Dry Film Thickness of Nonmagnetic Coatings Applied to a Ferrous Base*, American Society for Testing and Materials, Philadelphia, PA, September 1981.
25. ANSI/ASTM G 12-77, *Standard Methods for Nondestructive Measurement of Film Thickness of Pipeline Coatings on Steel*, American Society for Testing and Materials, Philadelphia, PA, May 1978.

Downloaded from http://www.everyspec.com

26. ASTM B 499-75, *Standard Method for Measurement of Coating Thicknesses by the Magnetic Method: Nonmagnetic Coatings on Magnetic Basis Metals*, American Society for Testing and Materials, Philadelphia, PA, October 1975 (Reapproved 1980).
27. ASTM B 530-75, *Standard Method for Measurement of Coating Thicknesses by the Magnetic Method: Electrodeposited Nickel Coatings on Magnetic and Nonmagnetic Substrates*, American Society for Testing and Materials, Philadelphia, PA, October 1975 (Reapproved 1980).
28. ASTM B 568-79, *Standard Method for Measurement of Coating Thickness by X-Ray Spectrometry*, American Society for Testing and Materials, Philadelphia, PA, August 1979.

Downloaded from http://www.everyspec.com

CHAPTER 6
MEASUREMENTS FOR INTERRUPTED DIAMETERS

The principal gear inspection methods recommended by the American Gear Manufacturers Association (AGMA) are discussed in this chapter. All of the significant defects that can occur in a gear are defined, and their individual and composite inspections are discussed; however, detailed discussion is limited to inspection involving dimensional measurement. Gaging for interrupted diameters is discussed in Chapter 8. Chapter 8 also presents references to appropriate standards for screw thread inspection.

6.0 LIST OF SYMBOLS

A = addendum of a gear, in.
A_c = corrected addendum of a gear, in.
a = gear-rolling test total composite reading, in.
b = total composite variation in gear-rolling test master gear, in.
c = total composite tolerance shown on drawing of gear, in.
C_r = addendum comparator reading, in.
E_i = specified angle of ith gear tooth from a reference tooth, deg
E_i' = actual angular position of ith tooth from a reference tooth, deg
e_i = index error of the ith gear tooth, deg
e_l = largest index error, deg
e_s = smallest index error, deg
F_i = total transmission error, in.
F_p = accumulated pitch error, in.
$f_{f_{Eff}}$ = effective profile error, in.
f_i = tooth-to-tooth transmission error, in.
f_p = adjacent pitch error, in.
f_1 = output from optical encoder measuring rotational motion of driving gear, pulses/s
f_2 = output from optical encoder measuring rotational motion of driven gear, pulses/s
I_v = total index variation, deg
i = number of tooth, dimensionless
N = number of teeth in gear, dimensionless
PD = pitch diameter of a gear, in.
t = gear tooth thickness, in.
Δt_n = variation in gear tooth thickness, in.
θ = pressure angle, deg

6.1 INTRODUCTION

A cylindrical or conical product with a discontinuous circumference is known as a product with interrupted diameters. Examples of products with interrupted diameters are serrated parts, knurled parts, splines, gears, hobs, and screws. Inspection of serrated or knurled parts does not involve high degrees of accuracy and is performed by gaging methods discussed in Chapter 8. Measuring methods for splines are similar to those for parallel axis gears.

The significant gear defects relate either to the gear blank or to the tooth form. Defects related to the gear blank can be identified by conventional methods discussed in other chapters of this handbook. Defects related to the gear tooth form include runout and variations in pitch, angular spacing, profile, lead, tooth thickness, and backlash. Various methods for inspecting gears for these defects are discussed in the paragraphs that follow. Inspection procedures for spur, helical, bevel, and herringbone gears are used as examples where

Downloaded from http://www.everyspec.com

appropriate. The procedures, however, are not limited to these gears. Selection of an appropriate inspection method depends upon the type of defect, amount of manufacturing tolerance, gear size, accuracy of blanks, available inspection equipment, and cost of inspecting each part.

6.2 GEARS

Gears are machine elements that transmit motion by means of successively engaging teeth (Ref. 1). The dendrogram in Fig. 6-1 shows the major types of gears in industrial use. *Gear Handbook Volume 1* (Ref. 1), published by the American Gear Manufacturers Association (AGMA), is the primary source for definitions, classification of gears and defects, and interpretation of inspection process results. Fig. 6-2 illustrates gear tooth profile nomenclature.

AGMA has classified gears based upon their precision, construction material, and hardness; each class of gear is represented by a quality number. This number consists of a prefix letter that identifies the tolerance source; a number that identifies the gear quality; a letter that indicates tooth thickness tolerance; and two

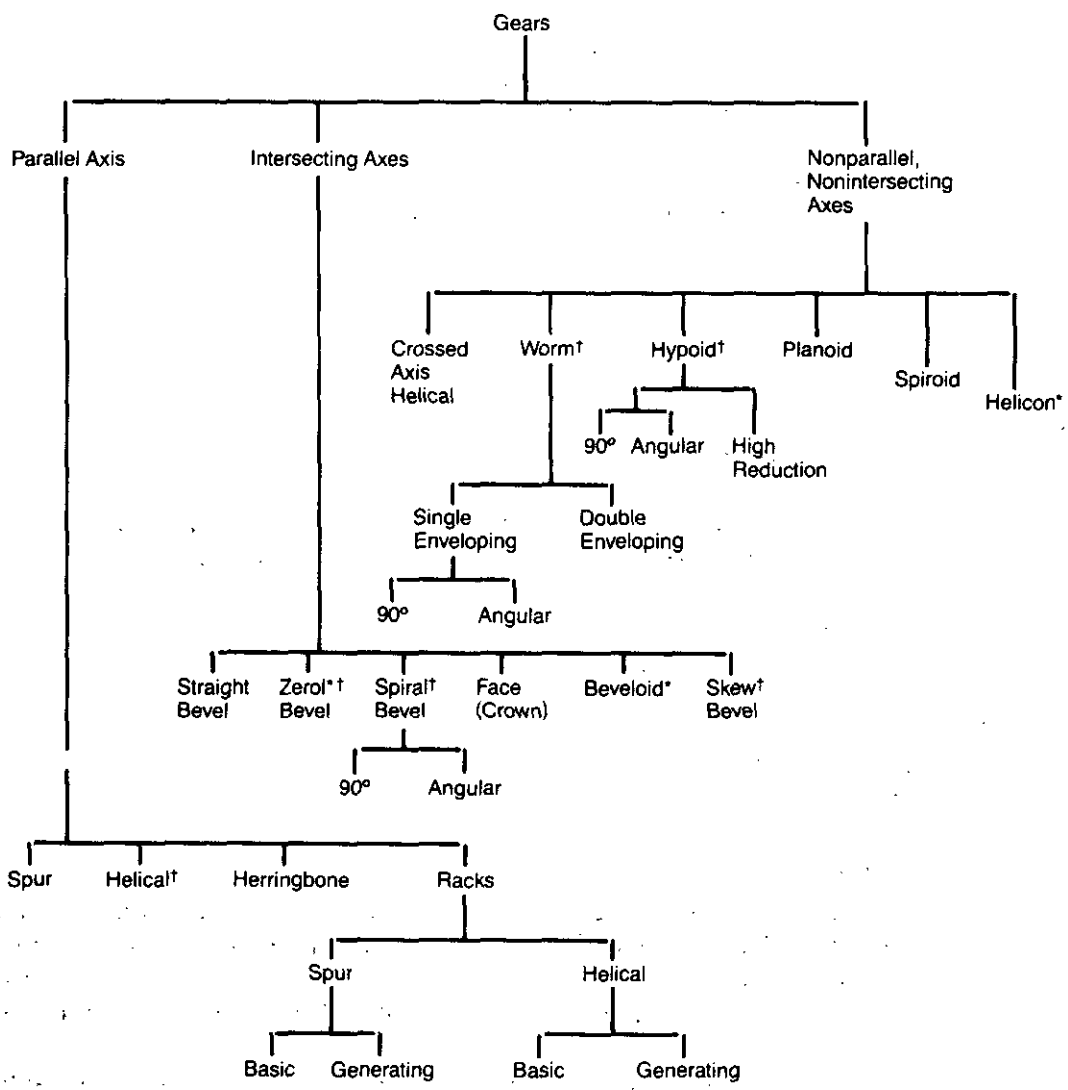

*Trade names.
†Include Right-Hand (RH) and Left-Hand (LH) configurations.

Figure 6-1. Major Gear Types

Downloaded from http://www.everyspec.com

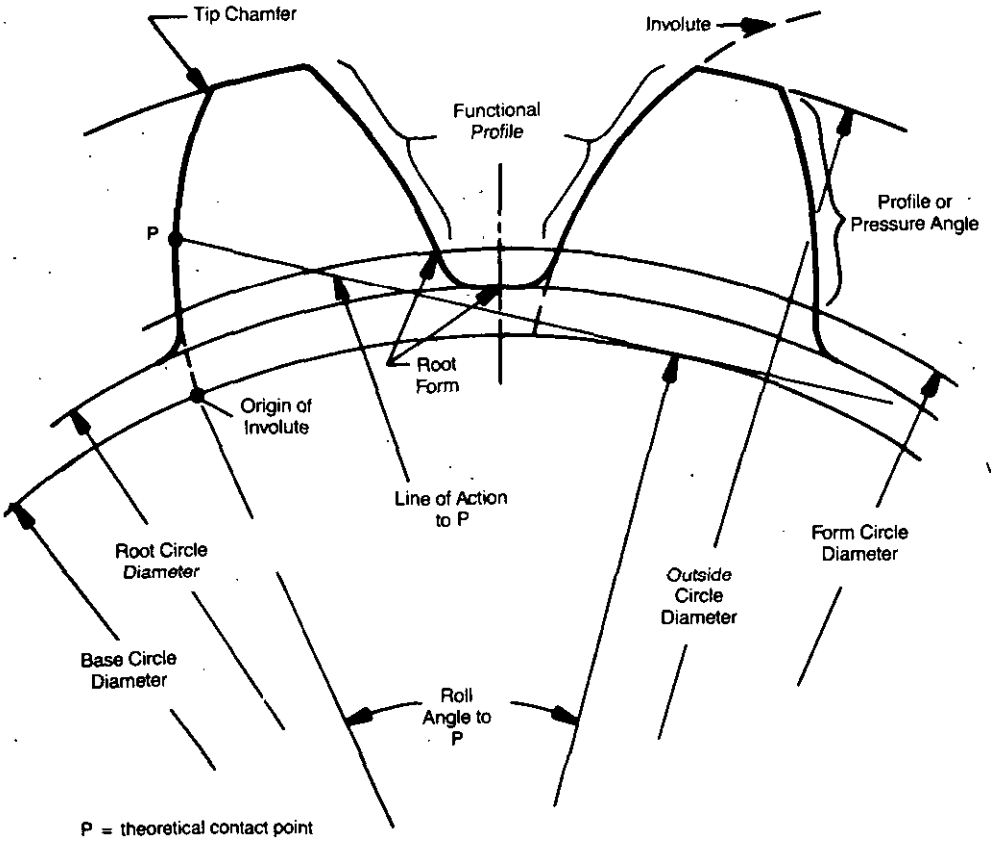

From Volume I of the AGMA Gear Handbook, *Gear Classification, Materials, and Measuring Methods for Unassembled Gears* (AGMA 390.03). Copyright © by American Gear Manufacturers Association, 1500 King Street, Suite 201, Alexandria, VA 22314.

Figure 6-2. Gear Tooth Profile Nomenclature

letters followed by a number that indicate material, treatment, and hardness. An example of a quality number is

Q6A−HC−1

where

Q = tolerance source identifier
6 = quality number—i.e., pitch, index, and pitch line to index have tolerances conforming to quality No. 6
A = tooth thickness code, i.e., tooth thickness or backlash has tolerances conforming to quality A
HC = material designation for carbon steel
1 = treatment and hardness designator, that means normalize and temper to between 212 and 248 Brinell Hardness Number.

Examples of gear class number determination; suggested quality numbers for various applications; materials, treatments, and hardness values; AGMA quality numbers for various types of gears; and tolerances associated with gear sizes and elements are presented in Ref. 1.

Process control includes manufacturing planning, cutting tool selection, machine tool setup and maintenance, heat treatment control, and the quality assurance programs associated with each manufacturing stage. When process control is closely followed, little or no inspection is required for low-precision gears.

In applications requiring precise dimensional tolerances, inspection must be performed for various types of

Downloaded from http://www.everyspec.com

defects related to the tooth form. Defects related to the tooth form include runout and variations in pitch, profile, lead, tooth thickness, backlash, and angular spacing. The inspection methods used for measuring these defects can be classified broadly as elemental methods and performance test methods. Elemental methods involve actual or comparative measurement of the dimensional characteristics of the tooth form. As the name indicates, performance tests insure that the gear will perform according to design requirements and usually do not involve dimensional measurement. Due to the limited scope of this handbook, performance tests are not dealt with in depth.

A discussion about the various defects found in gears and the inspection methods associated with each follows. Recommendation charts are provided with each paragraph to facilitate selection of appropriate inspection methods. Inspection method selection for each defect is based on AGMA quality number, gear pitch diameter, and normal diametral pitch, i.e.,the ratio of number of teeth in a gear to its pitch diameter.

6.2.1 RUNOUT

Runout is the total variation in distance between a surface of revolution and an indicated surface (Ref. 1). Two types of runout—radial and axial—are encountered in gears. Depending on the gear type, runout measurement includes the radial and/or axial component.

Radial runout is the total variation of an indicated surface from a surface of revolution measured in the direction perpendicular to the axis of rotation of the indicated surface. Radial runout includes effects of eccentricity and out-of-roundness (Ref. 1).

Axial runout is the total variation of an indicated surface from a surface of revolution measured in the direction parallel to the axis of rotation of the indicated surface.

Thus runout is a combined effect of all or some of the following: eccentricity, out-of-roundness, spiral or helix angle variation, profile variation, spacing variation, tooth thickness variation, and accumulated pitch variation.

6.2.1.1 Runout Measuring Methods

Runout in a gear as measured by the methods described herein is usually measured in a radial direction and is considered a full indicator movement (FIM) between the maximum and minimum readings during a complete revolution of the gear. The commonly used methods for measuring runout in gears include indicating overpins, probe check, rolling check, and contact pattern check:

1. *Indicating Overpins*:

The most widely used method for measuring runout, i.e., indicating overpins, employs a very simple setup. As Fig. 6-3 shows, the gear is mounted between two centers, and a pin of appropriate diameter is placed in the slot between two adjacent teeth. The pin diameter selected is such that the pin surface protrudes above the gear teeth when the pin is seated in the slot. The gear is rotated and an indicator reading is taken with the indicator probe touching the pin at its topmost point. A precisely machined flat plate or inspection parallel sometimes is placed on top of the pin to insure that the reading is taken at the topmost point. Then the pin is placed in the next slot, and the measurement repeated. The indicator probe should contact the pin at the same spot to prevent any variations in the pin from affecting the readings. This procedure is continued until measurements have been taken with the pin placed in each of the slots, i.e., one complete revolution of the gear to be inspected. The difference between the lowest and highest readings is the actual runout. Advantages of this method are simplicity, high accuracy, and a minimal need for equipment. Also the size of the gear that can be inspected is not limited. A disadvantage of this method is that it does not account for or compensate for any variations in gear tooth spacing.

Spur or helical gears can be inspected by this method, but caution is required when a helical gear is measured. The pin tends to roll slightly in the helical slot, and this movement results in an inaccurate reading. This inaccuracy can be avoided, however, if the gear and pin are rolled under a flat plate or inspection parallel and the reading is taken over the plate or inspection parallel as it reaches its highest point.

2. *Probe Check*:

a. *Single-Probe Check*. In the setup for the single-probe check, the gear is mounted firmly between two centers. A single probe in the form of a ball, pin, conical point, or rack tooth—depending upon the need—is

Downloaded from http://www.everyspec.com

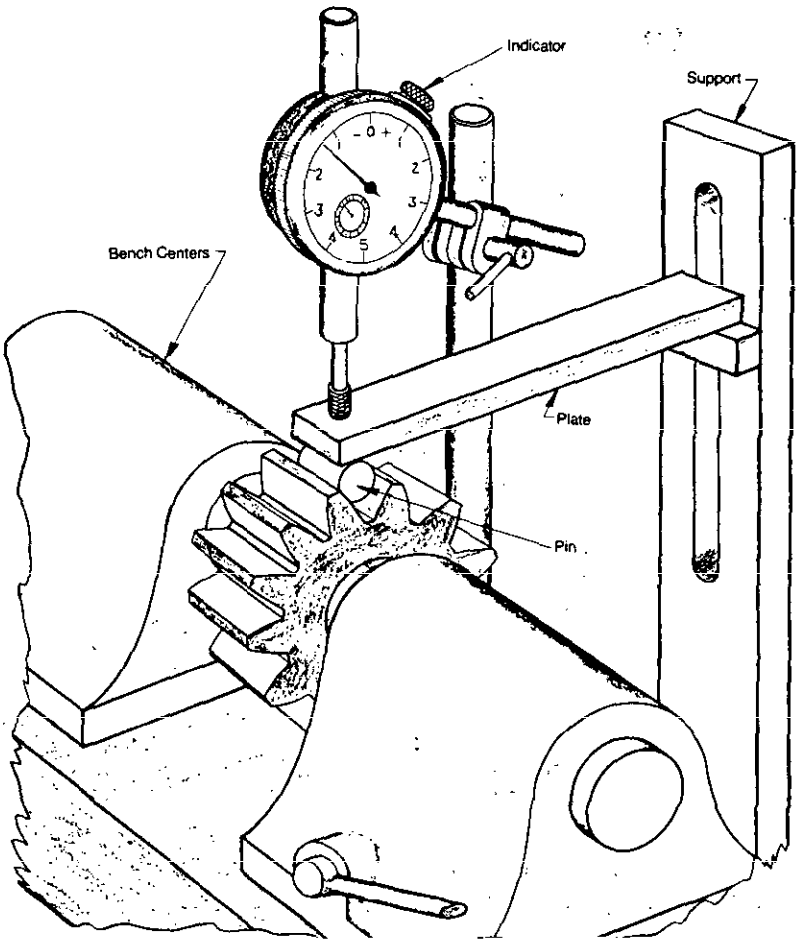

Figure 6-3. Runout Measurement by Indicating Overpins

inserted radially into a slot between adjacent teeth of the gear. (For bevel and hypoid gears the probe is inserted in a direction perpendicular to the pitch cone.) An indicator reading is taken that shows the relative depth of penetration of the probe. The gear is rotated and the procedure is repeated for each slot. The difference between the highest and lowest readings in one revolution of the gear being inspected is the actual runout. Figs. 6-4 and 6-5 show the required setups for a single-probe check of spur, helical, bevel, and hypoid gears. As in the indicating overpins method, compensation is not made for variations in gear tooth spacing.

b. *Double-Probe Check.* The gear is mounted firmly between two centers, and a setup with two probes—one fixed and the other movable—is used. The probes are positioned on opposite sides—approximately 180 deg at mid-face—of the gear to make contact with the corresponding tooth profiles. Readings that indicate displacement of the movable probe are recorded. This procedure is repeated for each set of teeth through one complete revolution of the gear to be inspected, and the difference between the highest and lowest reading is calculated. One half of this amount is the actual runout. Fig. 6-6 shows runout measurement for spur and helical gears, and Fig. 6-7 shows runout measurement for bevel and hypoid gears.

3. *Rolling Checks.* In a double flank rolling check, a master gear is rolled in tight mesh with the product gear, i.e., the gear being inspected, as shown in Fig. 6-8. A master gear is a gear of known accuracy used for checking other gears. One of these gears is mounted either on a weight- or spring-loaded movable center and the other on a fixed center. Variation in the center distance or mounting distance during the roll test is measured to indicate the extent of runout in the gear being inspected. This measurement, however must be adjusted to compensate for the effect of runout of the master gear. Frequently, the runout error in the master gears used in inspection is as much as one third or one fifth of the error in the product gear. If the total indicator reading is within the runout specification after making allowance for master gear error, the product gear may be acceptable. The rolling check is discussed further in par. 6.2.5.

Downloaded from http://www.everyspec.com

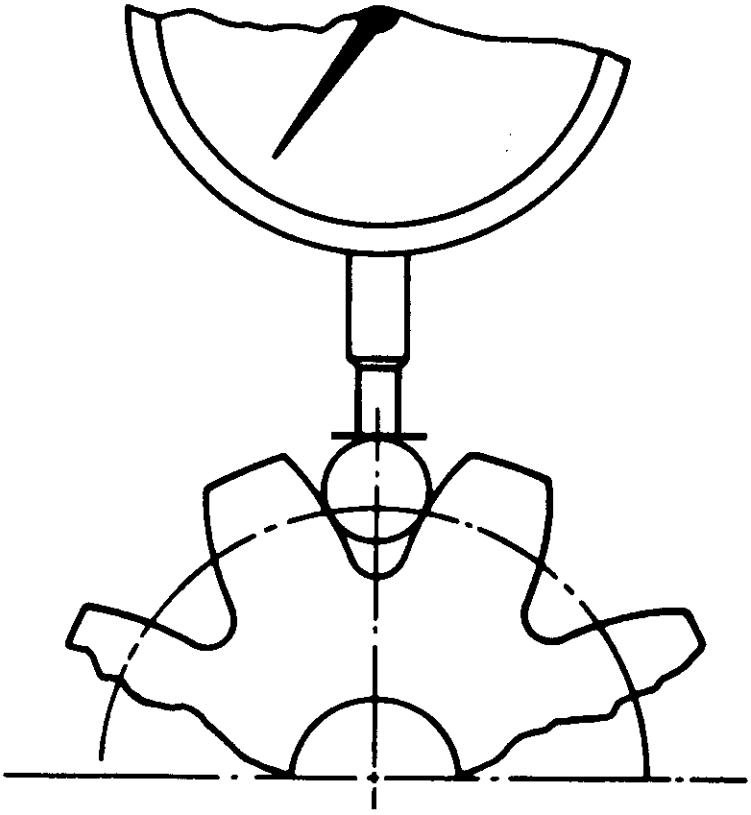

From Volume I of the AGMA Gear Handbook, *Gear Classification, Materials, and Measuring Methods for Unassembled Gears* (AGMA 390.03). Copyright © by American Gear Manufacturers Association, 1500 King Street, Suite 201, Alexandria, VA 22314.

Figure 6-4. Single-Probe Check for Spur and Helical Gears

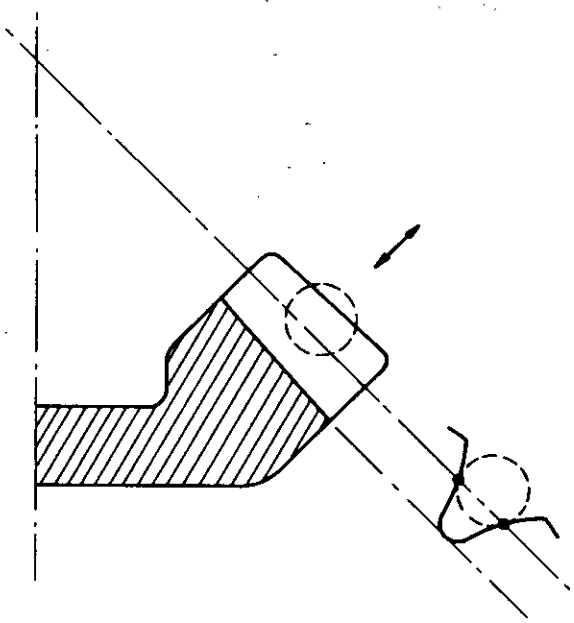

From Volume I of the AGMA Gear Handbook, *Gear Classification, Materials, and Measuring Methods for Unassembled Gears* (AGMA 390.03). Copyright © by American Gear Manufacturers Association, 1500 King Street, Suite 201, Alexandria, VA 22314.

Figure 6-5. Single-Probe Check for Bevel and Hypoid Gears

Downloaded from http://www.everyspec.com

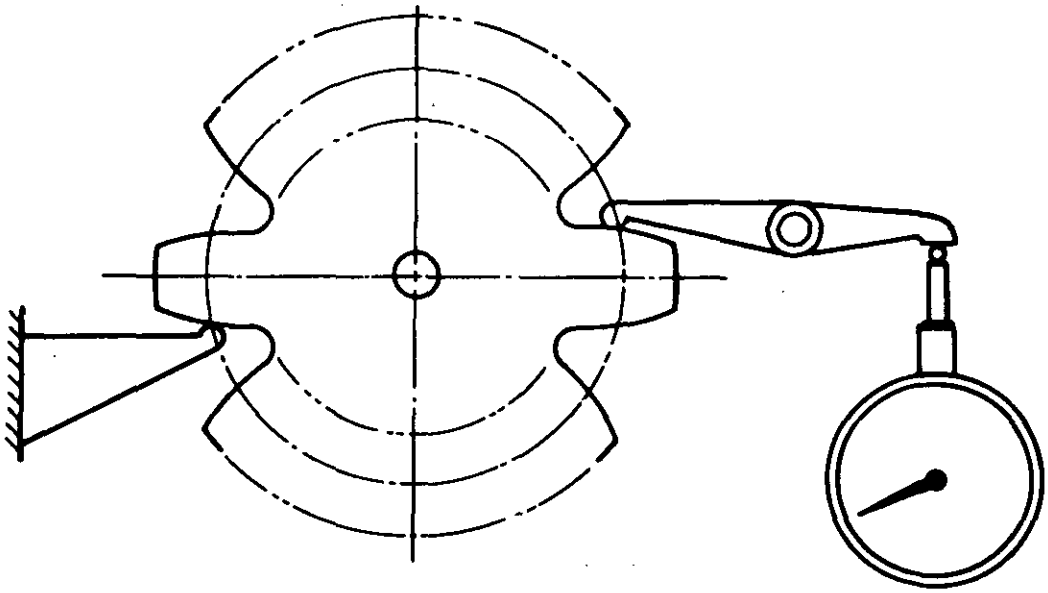

From Volume I of the AGMA Gear Handbook, *Gear Classification, Materials, and Measuring Methods for Unassembled Gears* (AGMA 390.03). Copyright © by American Gear Manufacturers Association, 1500 King Street, Suite 201, Alexandria, VA 22314.

Figure 6-6. Double-Probe Check for Spur and Helical Gears

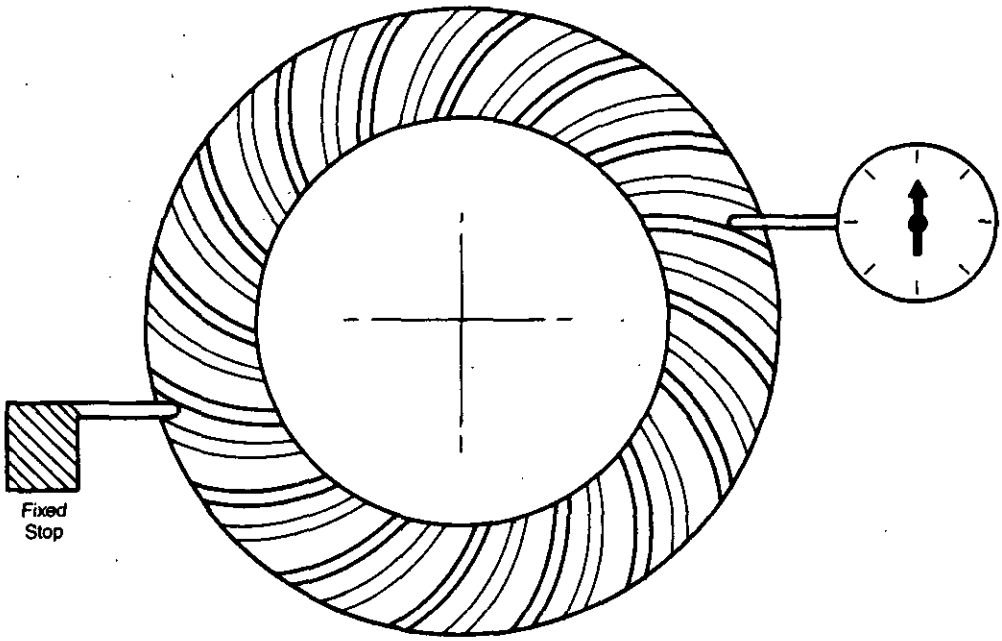

From Volume I of the AGMA Gear Handbook, *Gear Classification, Materials, and Measuring Methods for Unassembled Gears* (AGMA 390.03). Copyright © by American Gear Manufacturers Association, 1500 King Street, Suite 201, Alexandria, VA 22314.

Figure 6-7. Double-Probe Check for Bevel and Hypoid Gears

Downloaded from http://www.everyspec.com

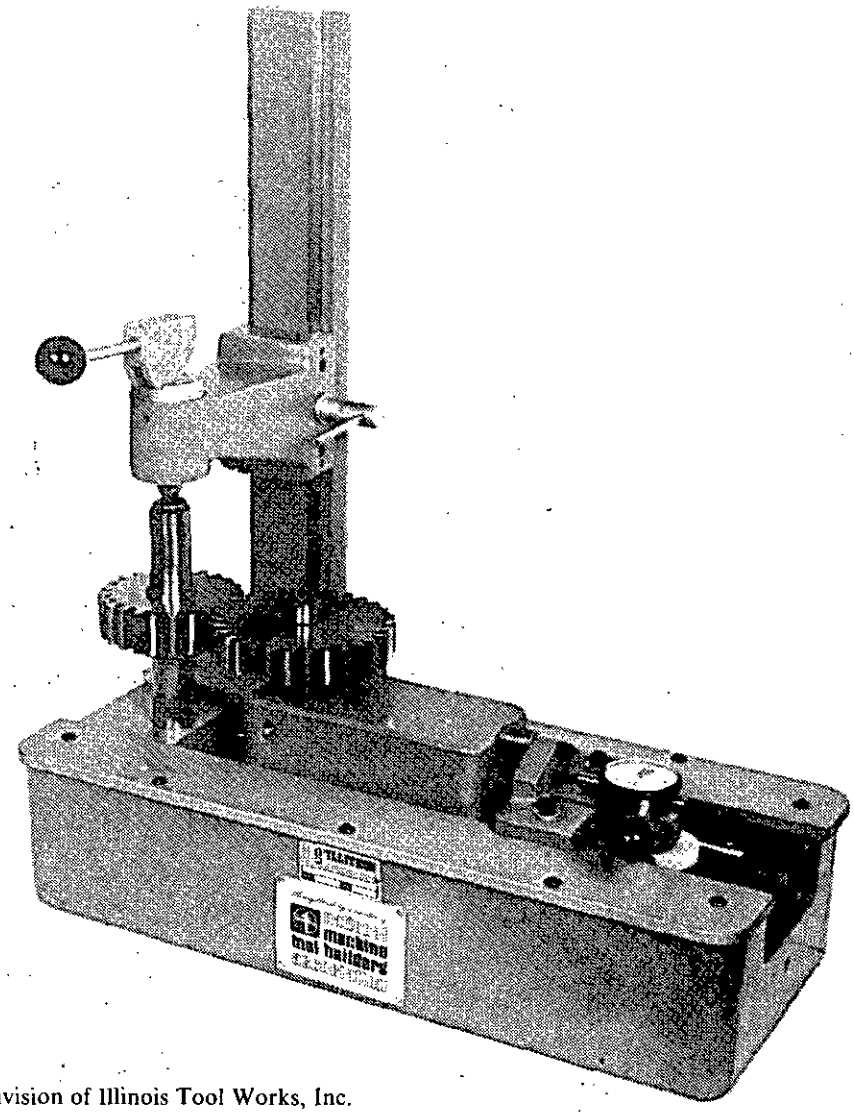

Courtesy of Illitron, A Division of Illinois Tool Works, Inc.

Figure 6-8. Rolling Check of a Small Gear

4. *Contact Pattern Check*. The existence of runout in a gear also can be observed if the gear is run with a master gear of known runout in a rolling test and if the contact pattern of the gear teeth is observed. The product gear is coated with a marking compound before it is rolled with the mating gear. The mating gear may be from production, or it may be a master gear. The marking compound removed from the meshing gear tooth surfaces indicates the contact pattern of the teeth. Visual observation of this contact pattern indicates the presence of runout. If runout exists, it will cause a shift in tooth contact from top to bottom along the tooth flank during each revolution and also will cause cyclic variation in the noise level. Absolute dimensional measurement of runout is not possible with this method. If the absolute value is required, it should be obtained by one of the other methods available to measure runout described earlier.

6.2.1.2 Recommended Methods of Inspection

Inspection methods recommended by AGMA are shown in Table 6-1, reproduced from AGMA *Gear Handbook Volume I* (Ref. 1).

Downloaded from http://www.everyspec.com

TABLE 6-1. RECOMMENDED METHODS FOR CONTROL OF RUNOUT (Ref. 1)

AGMA Quality Number	Normal Diametral Pitch, in.*	Recommended Methods for Runout Control†								
		Pitch Diameter, in.								
		3/4	1-1/2	3	6	12	25	50	100	200 and over
3,4,5 and 6	1/2						1	1	1	1
	1					1	1	1	1	1
	2				1	1	1	1	1	1
	4			1	1	1	1	1	1	1
	8		1	1	1	1	1	1	1	
	16-19.99	1	1	1	1	1	1	1	1	
7,8, and 9	1/2						1	1	1	1
	1					2,3,4	1	1	1	1
	2				2,3,4	2,3,4	1	1	1	1
	4			2,3,4	2,3,4	2,3,4	2,3,4	2,3,4	1	1
	8		2,3,4	2,3,4	2,3,4	2,3,4	2,3,4	2,3,4	2,3,4	
	16-19.99	2,3,4	2,3,4	2,3,4	2,3,4	2,3,4	2,3,4	2,3,4	2,3,4	
10,11, 12,13 14, and 15	1/2						2,3,4	2,3,4	2,3,4	2,3,4
	1					2,3,4	2,3,4	2,3,4	2,3,4	2,3,4
	2				2,3,4	2,3,4	2,3,4	2,3,4	2,3,4	2,3,4
	4			2,3,4	2,3,4	2,3,4	2,3,4	2,3,4	2,3,4	2,3,4
	8		2,3,4	2,3,4	2,3,4	2,3,4	2,3,4	2,3,4	2,3,4	
	16-19.99	2,3,4	2,3,4	2,3,4	2,3,4	2,3,4	2,3,4	2,3,4	2,3,4	

*The ratio of the number of teeth to the pitch diameter, in.
†Recommended methods;
Number 1—Process control
Number 2—Indicating overpins
Number 3—Probe check (bevel and hypoid)
Number 4—Roll check (composite check)
Number 4—In the shaded area does not refer to bevel and hypoid gears

From Volume I of the AGMA Gear Handbook, *Gear Classification, Materials, and Measuring Methods for Unassembled Gears* (AGMA 390.03). Copyright © by American Gear Manufacturers Association, 1500 King Street, Suite 201, Alexandria, VA 22314.

6.2.2 PITCH VARIATION, SPACING, AND INDEX

Pertinent definitions of terms relative to gear teeth follow:

Pitch is the *theoretical* distance between corresponding points on adjacent teeth of a gear and is the average of all tooth-spacing readings in 360 deg (Ref. 1).

Tooth spacing is the *measured* distance between corresponding points on adjacent teeth of a gear (Ref. 1).

Pitch variation is the algebraic difference between the pitch and the tooth spacing (Ref. 1).

Spacing variation is the algebraic difference in measurements of adjacent spacings (Ref. 1).

Index is the theoretical angular position of gear teeth about an axis established by a specified surface (Ref. 1).

Pitch, tooth spacing, and index are interrelated. Therefore, pitch variation—the algebraic difference between pitch and tooth spacing—can be determined if either the tooth spacing or the index is measured. For this reason, the measuring methods for pitch variation also include methods for measuring tooth spacing and index. Pitch variation can be specified in either linear or angular units.

6.2.2.1 Measuring Methods for Tooth Spacing

The following methods are employed to measure tooth spacing:

1. *Pitch-Checking Instruments*:

A pitch-checking instrument allows measurement of the distance between corresponding points on adjacent gear teeth. The essential elements of a pitch-checking instrument are a gear-mounting device and a checking head consisting of two fingers, one fixed and the other movable. An indicating device is linked to the movable finger, and a spring mechanism is provided to maintain constant contact between the tooth profile

Downloaded from http://www.everyspec.com

and the fingers. A stop is provided to insure that the checking head is in the same position each time a reading is taken. A schematic arrangement of a pitch-checking instrument is shown in Fig. 6-9.

For gear inspection the gear is mounted on a rotatable axis, preferably its reference (datum) axis. If it is not mounted on its reference axis, compensation must be made for the effect of runout between the reference and mounting axes. After the gear is mounted, the head is moved against the stop, a reading is taken, and the head is moved away. The gear is rotated to the next set of teeth, and the procedure is repeated for all teeth.

A typical pitch-checking machine has a headstock and a tailstock for mounting the gear between centers, and the gaging head is mounted on a cross slide. The gaging head has a movable finger and a fixed finger that contact corresponding sides of adjacent gear teeth. For checking helical gears a swiveling barrel is provided to position the indicating mechanism to the correct helix angle. For checking the circular pitch of spur, helical, or worm gears, a handwheel is provided to adjust the gaging head so that the gaging fingers contact the gear approximately at the pitch line. The indicating assembly is carried in a slide capable of moving at right angles to the barrel axis of the gaging head to permit adjustment normal to the teeth of spur or helical gears. A hand lever permits withdrawal of the gaging head by a preset distance; this withdrawal causes an index pawl to rotate the gear through one angular pitch to check the next tooth.

Some machines measure tooth-spacing variations and calculate pitch variation. In addition to checking tooth spacing, this machine also can check runout and tooth parallelism on spur gears.

Fig. 6-10 shows an automatic tooth-spacing checker or comparator. It is a motor-driven instrument with an indexing and sensing finger mounted on a slide that moves cyclically at variable speed along an oval path in a plane normal to the gear axis. Pitch variations are plotted on a chart through an electrical recording system. The chart is read when peak points are noted for each tooth. Automatic machines are used widely in high-production gear shops, whereas manually operated machines are used largely in job shops doing high-precision gear work.

The most popular size commercially available pitch-checking machine can handle gears up to 12 in. in diameter. Custom-designed machines or portable pitch-checking instruments are required to inspect gears above 24 in. in diameter.

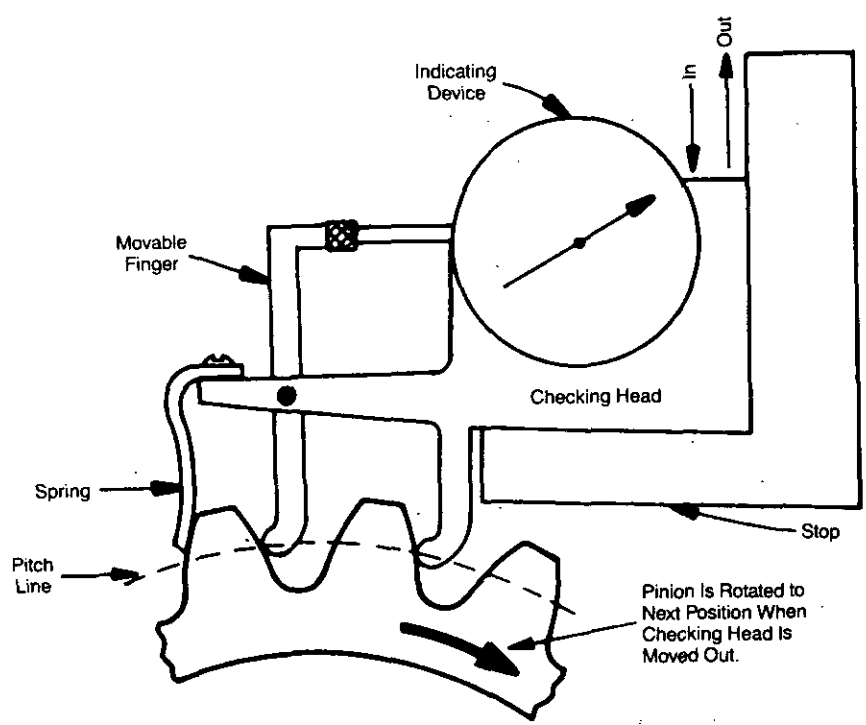

From Volume I of the AGMA Gear Handbook, *Gear Classification, Materials, and Measuring Methods for Unassembled Gears* (AGMA 390.03). Copyright © by American Gear Manufacturers Association, 1500 King Street, Suite 201, Alexandria, VA 22314.

Figure 6-9. Schematic of Pitch Checking Instrument

Downloaded from http://www.everyspec.com

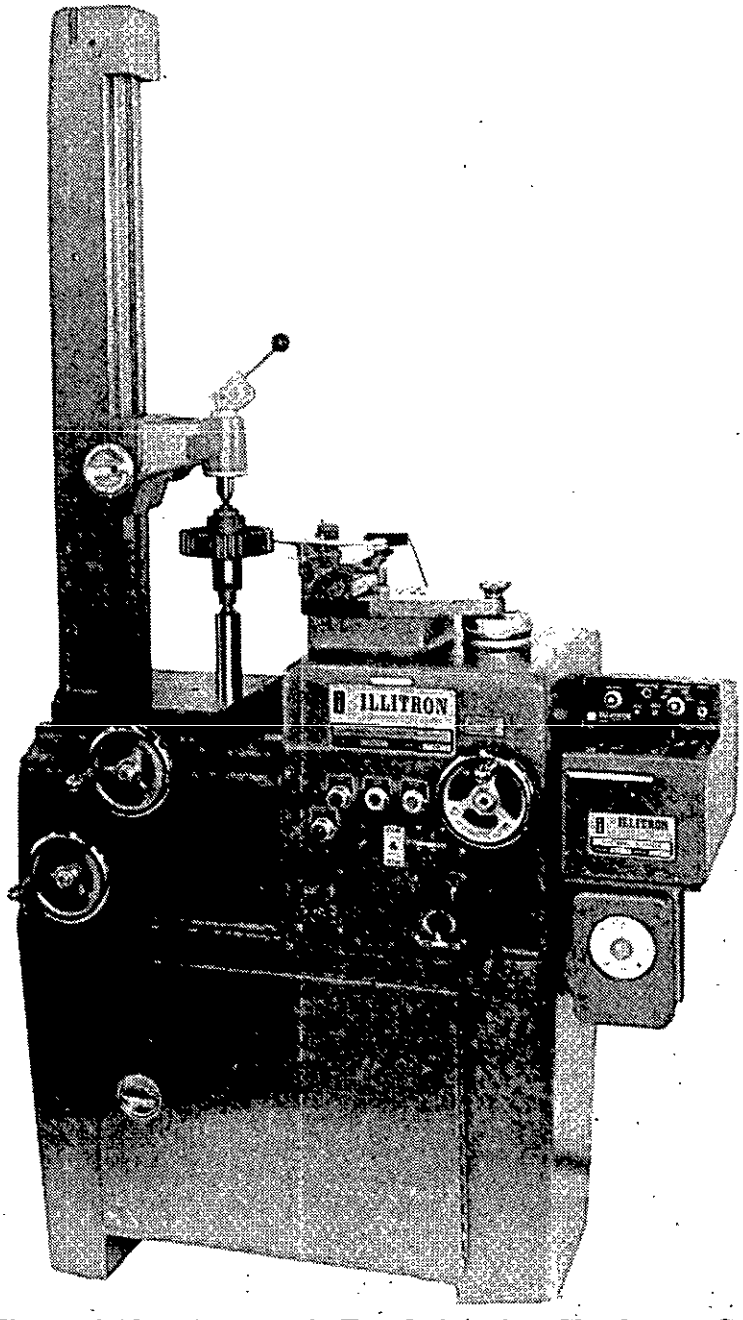

Courtesy of ITW Illitron.

Figure 6-10. Automatic Tooth-Spacing Checker or Comparator

2. *Portable Pitch Checking Instruments*:

A portable pitch-checking instrument measures tooth-spacing variation, from which pitch variation is calculated. These instruments are relatively inexpensive and, therefore, are used widely in workshops that produce small quantities of gears. Larger, heavier gears up to 72 in. in diameter can be checked by portable instruments. The essential elements of the portable pitch-measuring instruments are two fingers, one fixed and the other movable.

For a correct reading the portable pitch-measuring instrument has to be positioned radially on a cylindrical surface. Therefore, it is provided with two additional fingers for positioning. Either the outside diameter or the root diameter land of the gear is used for this purpose. Errors in gear tooth cutting can influence readings taken with the root diameter land as reference. For this reason the outside diameter is

Downloaded from http://www.everyspec.com

preferred as a reference, but it must be deburred and finished smoothly. If the positioning surface is not exactly true with respect to the reference axis, compensation must be made for this error and a very complicated mathematical calculation is involved.

After the instrument is positioned, either on the outside diameter or the root diameter land, the other two fingers are made to contact the gear profile at or near the circular pitch. Initially, the indicator is set to zero. The instrument is then moved from one set of teeth to another, and readings are noted. The difference between each of these readings and the specified pitch gives the pitch variation for each pair of teeth. This procedure does not give an absolute value but the relative variation from pitch to pitch.

3. *Tooth-Spacing Tester*:

Manual and automatic tooth-spacing testers are available. The manual tooth-spacing tester shown in Fig. 6-11 is provided with two contact points, one movable and the other fixed. These contact points are mounted on a bracket that can be withdrawn to facilitate rotation of the gear between measurements. The fixed contact point is made to contact one side of the tooth and the movable point at a corresponding point on the adjacent tooth. The movable finger actuates the indicator, from which readings are noted for each successive tooth. A tooth-spacing error of 0.0001 in. can be calculated based upon readings taken by this device.

The automatic tooth-spacing tester is usually available in combination with a runout checker. This device is provided with separate gage heads for inspecting pinions and gears. The gear gage head is provided with three probes to check tooth spacing and runout simultaneously. While one of the probes locates the position of the gear, the other two check tooth spacing and runout.

The procedure for checking the pinion is similar to that for the manual machine. Results are recorded by an electronic device that establishes a reference line and electronically averages the readings for tooth spacing about this line. A norm is drawn from the reference line based upon the average reading. The deviation of each point from this line is measured to determine actual spacing error and maximum tooth-to-tooth error.

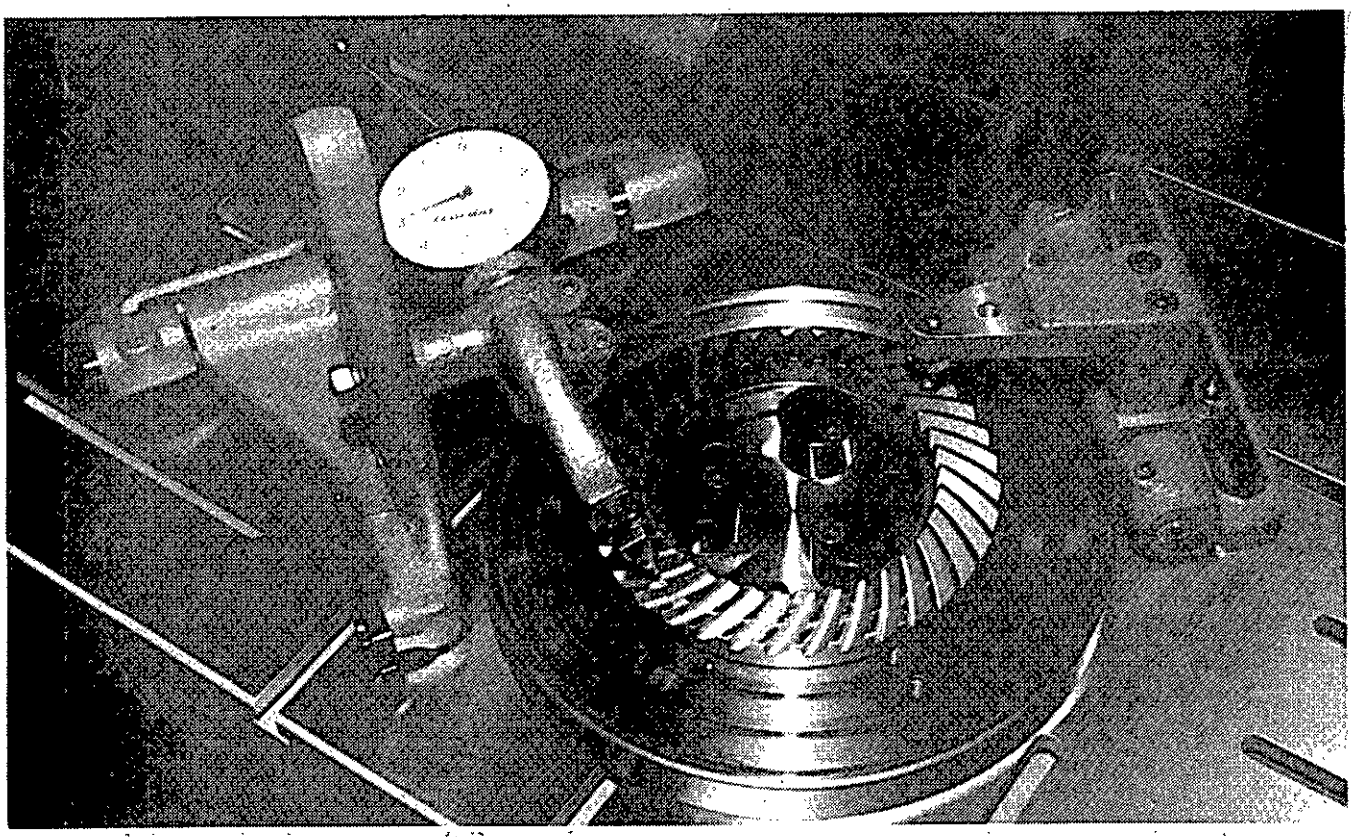

Courtesy of The Gleason Works, Rochester, NY.

Figure 6-11. Tooth-Spacing Tester

Downloaded from http://www.everyspec.com

6.2.2.2 Measuring Methods for Index

The four precision angular positioning devices that are the primary instruments for measuring gear index are the index measuring machine, the indexing head or rotary table, the optical polygon and autocollimator, and the theodolite. The fifth method is an algebraic summation of pitch variations obtained from tooth-to-tooth measurements.

1. *Index Measuring Machines*:

Index measuring machines provide a means of fast and accurate inspection of the index of circular products. They are commonly used for inspecting the index of high-precision gears such as those used in control devices for navigation, radar, fire control systems, missiles, and computers. These machines measure and record individually the position of an element, such as a gear tooth, and compare it with a reference position derived by equally dividing a 360-deg circle. A typical machine is shown in Fig. 6-12 and described in the paragraphs that follow.

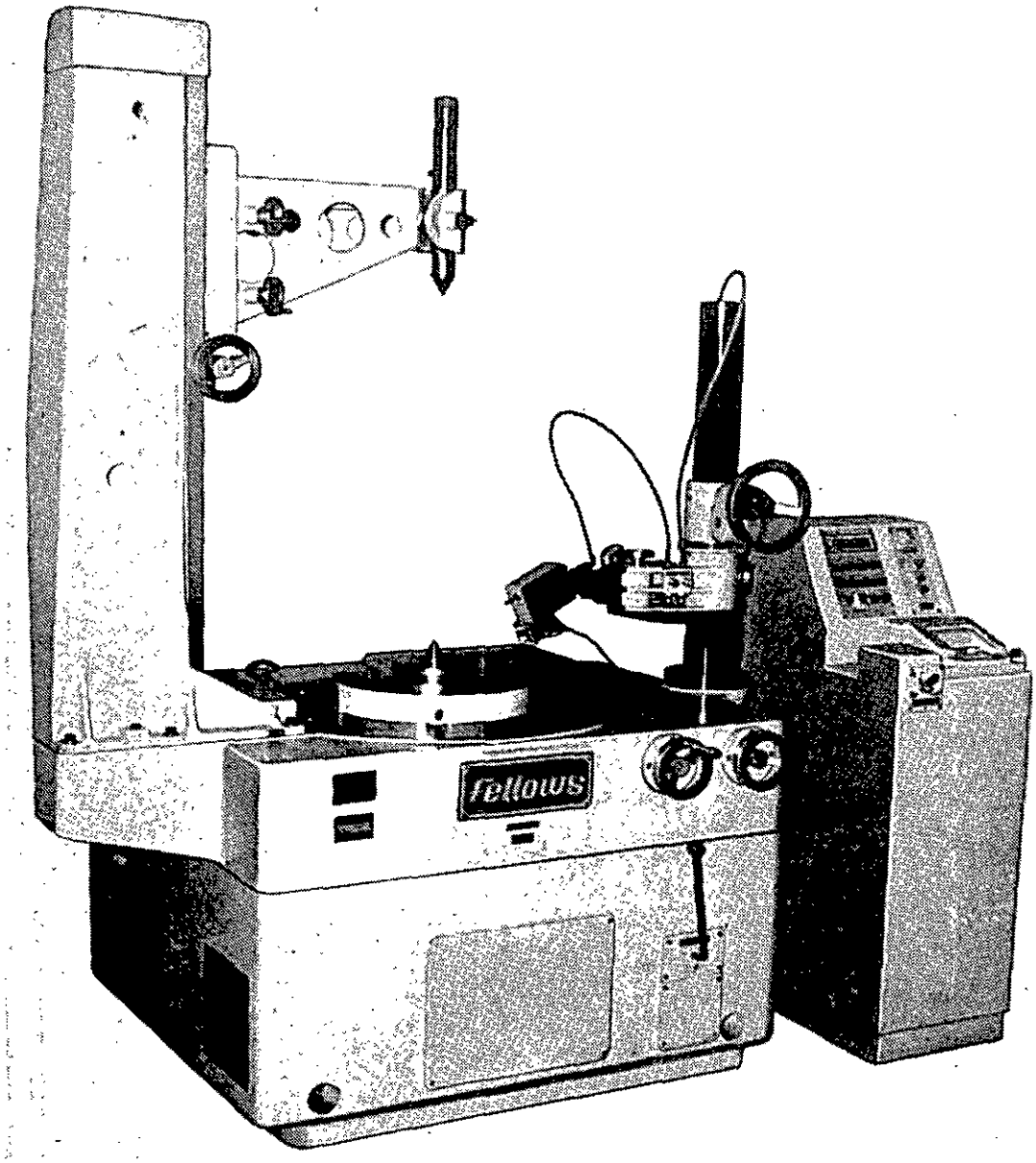

Courtesy of Fellows Corporation, Springfield, VT.

Figure 6-12. Index-Measuring Machine

Downloaded from http://www.everyspec.com

This typical machine uses a differential screw calibrated in millionths of an inch to adjust anvil blocks that precisely control the angle of index and number of indexes. The same two anvil blocks are used to measure each successive index. The gear to be inspected is mounted coaxially on a spindle that is capable of indexing at the desired angles. The probe moves forward, contacts the product, the position is recorded, and the probe retracts. The spindle is advanced, and the procedure is continued for all elements over the 360 deg. The probe is attached to a transducer that transmits electrical signals that represent the measurement to a recorder. The recorder charts the linear error in the angular positioning of the gear tooth. First, a chart is drawn for one side of the gear teeth. During the second revolution, the probe contacts the opposite side of the gear teeth, and a similar chart is drawn. For comparison the charts for the two sides can be placed side by side on charting paper as shown in Fig. 6-13. The chart indicates the relative position of gear teeth at approximately the pitch line. The error indicated by the chart is a linear measure that can also be converted to an angular measure.

Fig. 6-14 shows a typical chart for a gear and indicates a method for determining maximum index and pitch variations. The short plateaus indicate the location of points on individual gear teeth. The inspection is performed by first checking an arbitrarily selected tooth, then checking all the remaining teeth, and once again checking the original tooth. The first tooth is rechecked to insure that the gear has been rotated through a full 360 deg. The location recorded in the second check must be the same as the first one if the chart lines are to be used as a reference for any location measurements. A datum line joining the first tooth plateau to its second recording is drawn on the chart. This line will not be parallel to the chart lines if the total index is not 360 deg. Variations in index are measured from this chart datum line. A correctly mounted perfect gear would result in a straight datum line that indicates zero index error. Index error or an eccentric mounting results in a deviation from the straight line as indicated in Fig. 6-14. The total index variation is the difference between the high and low gear teeth. The maximum pitch variation is the largest difference between two adjacent teeth.

The most common causes of index variation in a gear are faulty manufacturing caused by eccentricity of the work spindle on the cutting machine or tester, eccentricity of the work-holding equipment on the cutting machine or tester, or an oversize bore in the workpiece, which can result in a workpiece mounting error or an eccentric mounting in the test setup. Most of the commercially available machines can compensate for eccentricity and other variations that can affect the index reading such as space width variation and runout. The compensating procedures are usually explained in the documentation accompanying the machine. A typical machine can inspect gears of up to 36.0 in. pitch diameter and a diametral pitch of 120 and coarser. With proper work-holding fixtures and correct indexing speeds, the accuracy of these machines is in the range of 2 to 4 sec. Linear accuracy, of course, is proportional to the radius at which the measurement is made.

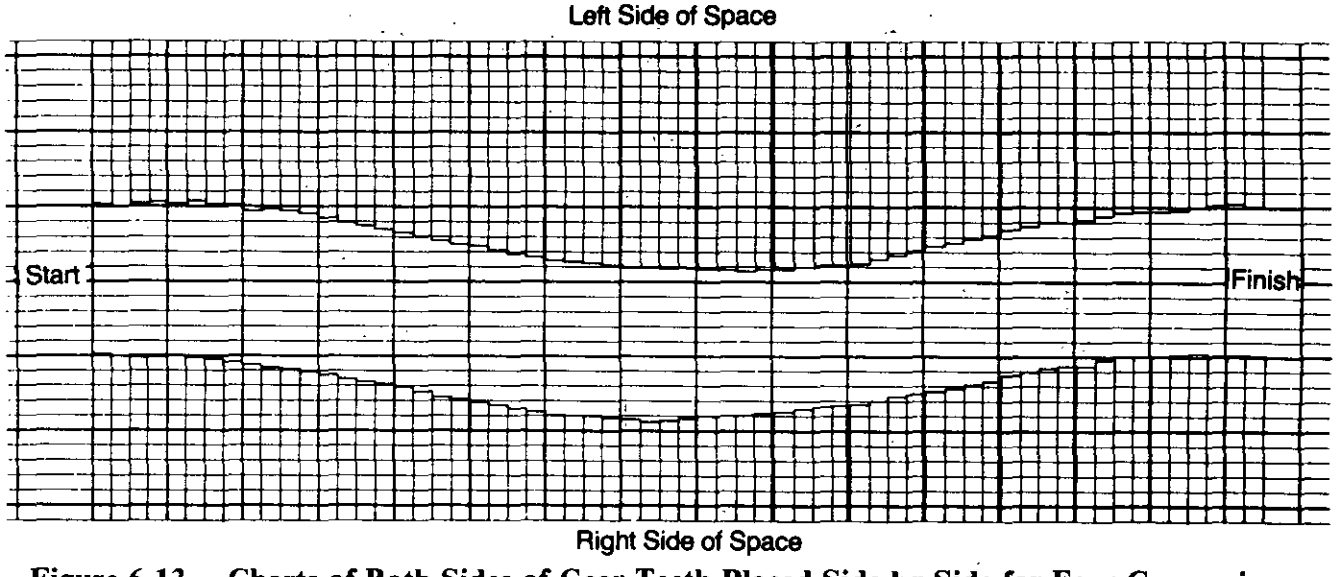

Figure 6-13. Charts of Both Sides of Gear Teeth Placed Side by Side for Easy Comparison

Downloaded from http://www.everyspec.com

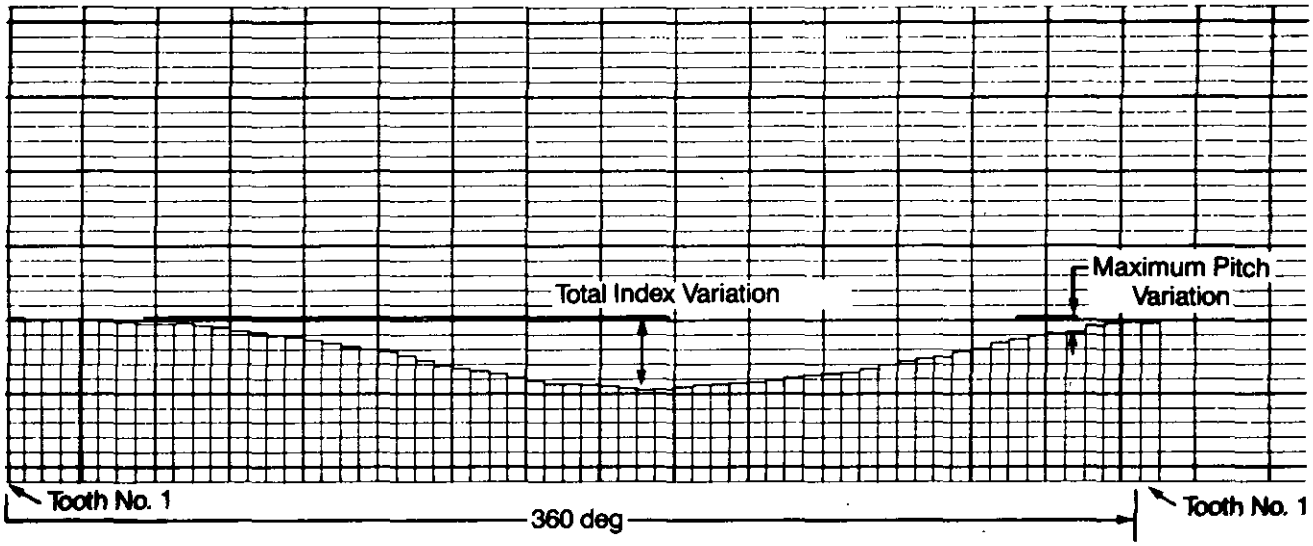

Figure 6-14. Determination of Maximum Pitch Variation and Maximum Index Variation

2. *Indexing Heads or Rotary Tables*:

Variation in the position of a point on the side of a gear tooth with respect to a true angular setting of an initial starting point can be measured by indexing heads or rotary tables. (Indexing heads are also known as dividing heads; rotary tables are also called indexing or dividing tables.) The only difference between the two is in the orientation of the axis of rotation. Indexing heads have a horizontal axis of rotation, whereas dividing tables have vertical axis of rotation. The weight and configuration of the product dictate selection of the device. Rotary tables are selected for heavier products and for products that lend themselves to inspection more easily when rotated about the vertical axis. Indexing heads generally are used for lighter products and for products that lend themselves to inspection more easily when rotated about a horizontal axis. These devices are used for angular positioning of gears during manufacture as well as during inspection. The discussion that follows applies to rotary tables as well as to indexing heads.

A typical indexing head is equipped with a device for mounting the product. A system is provided to rotate the work through precise angles and to indicate the angle of rotation. Commonly used rotating systems are the incremental type and the continuous type. In the incremental-type system the rotary movement is provided by one of several mechanisms such as a ring with peripheral notches, a worm and gear arrangement, a gear train, or a face gear arrangement. The product can be moved through a small increment of angle. A locking device, consisting of a pin and hole, is used to lock these indexing heads in place. A hand crank drives the rotating system.

The commercially available indexing heads with a continuous-type rotating mechanism are equipped with a worm drive and a large graduated drum or graduated master ring equipped with an accurate measuring system. This measuring system can be a microscope or optical system, or it can be inductive gratings to measure the angular displacement accurately. The accuracy of indexing heads ranges from 0.25 to 45 sec depending on the sophistication of the equipment.

Fig. 6-15 shows the geometry of the angular measurements made with an indexing head to compute index variation. A reference point is established on one tooth, angular measurements of the corresponding points on all the other teeth are made from the reference point, and the index error for each tooth is calculated. The total index variation for the gear is the algebraic difference between the smallest and the largest index error. Calculation of total index variation I_v is

$$I_v = e_l - e_s, \text{ deg} \tag{6-1}$$

Downloaded from http://www.everyspec.com

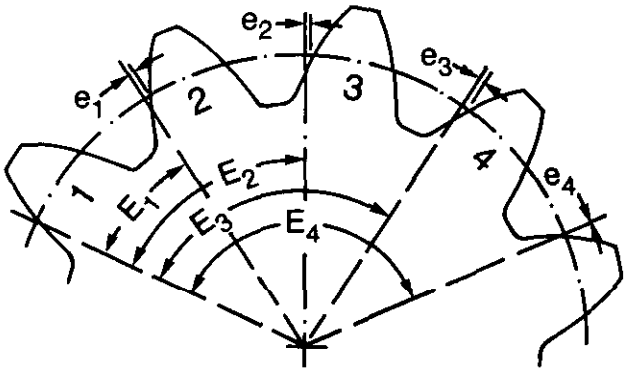

Figure 6-15. Angular Measurements for Index Variation

where

e_l = largest error e_i, deg
e_s = smallest index error e_i, deg
e_i = index error of ith tooth = $E_i - E_i'$, deg
i = number of tooth, dimensionless
E_i = specified angle of ith tooth from reference tooth = $(360/N)i$, deg
E_i' = actual angular position of ith tooth from reference tooth, deg
N = number of teeth in gear, dimensionless.

3. *Optical Polygon With Autocollimator*:

The optical polygon—combined with an autocollimator and a rotating, indexable table—can measure gear index very accurately. The optical polygon is a multifaced block made either of steel or glass and is available in single-piece or multipiece construction. The most commonly used polygons have 3, 5, 6, 9, 12, 18, 36, or 72 equally spaced sides. Thus the angular spacing among the faces is 360 deg divided by the number of sides. The faces are made flat to a high degree of accuracy (2 sec) and finished to an optical quality. Selection of the optical polygon depends on the angle being measured. This angle must be a multiple of the angle among the faces of the polygon.

The autocollimator, described in par. 4.2.2.1, can read angles to within 0.1 sec. The gear and the optical polygon are mounted on the indexing table with a reference point on the gear aligned with one on the indexing table. The polygon is mounted such that it is fixed with respect to the gear and provides an exact reflecting surface for the autocollimator beam. The autocollimator projects a collimated light beam with the reticle image and receives, in return, a reflected image from the optical polygon. After the reference is established, the indexing table is rotated until a corresponding reference point on an adjacent tooth is aligned with the established reference point on the indexing table. Because the polygon is fixed with respect to the gear, it also is rotated through the same angle as the gear and provides a new surface for the reflection of the autocollimator beam. If this angle of rotation does not exactly equal the angle provided by the optical polygon, its face will not be exactly perpendicular to the autocollimator beam and thus will provide an image that deviates from the reticle. This deviation of the image from the actual reticle indicates the error index variation in the gear teeth. Based on this principle, variations in gear index are measured for all teeth, and total index variation is calculated as described in the previous subparagraph (Ref. 1).

4. *Theodolites*:

A theodolite is an alignment telescope that is rotatable in both the horizontal and vertical planes around two mutually perpendicular and intersecting axes. The instrument is described in detail in par. 4.2.2.3. Sensitive optical dividing devices provided in the theodolite make it capable of precise angular positioning measurements around both rotational axes. In several types of theodolites, these dividing devices have a readout resolution to 1 sec.

Theodolites can be focused at a minimum distance of 6 ft and, therefore, can be used to measure the index of very large gears. One advantage of using a theodolite to measure index is that, when mounted, it is

Downloaded from http://www.everyspec.com

away from the product. Thus an external point can be used as a datum to measure any angular dimension and one does not have to rely on the mounting or referencing surfaces of the product, which might contain manufacturing errors.

5. *Algebraic Summation of Pitch Variations Obtained from Tooth-to-Tooth Measurements.* When dividing head equipment is not available, pitch variations obtained from tooth-to-tooth measurements, as described in par. 6.2.2.1, can be added to yield index error. One major disadvantage of this method, however, is that a slight error in pitch reading will be accumulated in the calculation of index error. Thus, for a small number of teeth, this method works relatively well. With more than 10 teeth, however, the method gives inaccurate results.

6.2.2.3 Recommended Methods of Inspection

Inspection methods recommended by AGMA are shown in Table 6-2, reproduced from Ref. 1.

6.2.3 PROFILE VARIATION

Profile is the geometric shape of a tooth from its root to its tip (Ref. 1).

6.2.3.1 Measuring Methods

Profile is measured with involute profile-measuring instruments or machines, with portable profile-measuring instruments, through the tooth contact pattern method, or by coordinate measurement machines. The tooth contact pattern method indicates only the active tooth profile and is discussed in par. 6.2.7.

Involute profile-measuring machines and portable profile-measuring instruments measure the departure of any point on a tooth profile from a perfect involute in the direction normal to the involute. These machines compare the profile of the gear teeth with the specified profile and then either indicate or record the deviations. For this purpose, these machines are equipped with dial indicators capable of measuring to 0.0001 in. The

TABLE 6-2. RECOMMENDED METHODS OF CONTROL OF PITCH VARIATION (Ref. 1)

AGMA Quality Number	Normal Diametral Pitch, in.*	Recommended Methods of Pitch Variation Control†								
		Pitch Diameter, in.								
		3/4	1-1/2	3	6	12	25	50	100	200 and over
6,7, 8, and 9	1/2					1,2	1,2	1,2	1,2	1,2
	1					1,2	1,2	1,2	1,2	1,2
	2				1,2	1,2	1,2	1,2	1,2	1,2
	4			1,2	1,2	1,2	1,2	1,2	1,2	
	8		1,2	1,2	1,2	1,2	1,2	1,2	1,2	
	16-19.99	1,2	1,2	1,2	1,2	1,2	1,2	1,2	1,2	
10 and 11	1/2						1,2	1,2	1,2	1,2
	1					1,2	1,2	1,2	1,2	1,2
	2				1,2	1,2	1,2	1,2	1,2	1,2
	4			2	2	2	2	2	1,2	1,2
	8		2	2	2	2	2	2	2	
	16-19.99	2	2	2	2	2	2	2	2	
12,13, 14, and 15	2				2	2	2	2	2	2
	4			2	2	2	2	2	2	2
	8		2	2	2	2	2	2	2	
	16-19.99	2	2	2	2	2	2	2	2	

*The ratio of the number of teeth to the pitch diameter, in.
†Recommended methods:
Number 1—Process control
Number 2—Pitch-measuring instruments or angular-positioning devices
Number 1—In the shaded area refers to spur, helical, and herringbone gears only.

From Volume I of the AGMA Gear Handbook, *Gear Classification, Materials, and Measuring Methods for Unassembled Gears* (AGMA 390.03). Copyright © by American Gear Manufacturers Association, 1500 King Street, Suite 201, Alexandria, VA 22314.

Downloaded from http://www.everyspec.com

record is made in the form of a graph of various points on the tooth relative to the base circle. Usually this plot is recorded on ruled paper wound on a drum. Compensation is made in the spacing between the vertical lines on this paper to account for the cylindrical path of the recording pen on the drum surface.

Locations on an involute profile can be represented either in terms of degrees of roll angle or scale graduations. The representation with roll angles is used more widely. Roll angle ranges of active gear profiles of mating gears are proportional to the gear ratios. Therefore, profile charts of unequally sized mating gears based upon roll angle have different lengths. Profile charts based upon scale readings will have the same length because the scale readings are proportional to the distance traveled by the contact point.

In measuring profile a timed relationship between the gear tooth rotation and the linear movement of the indicator probe or sensing device is used to compare the gear tooth profile and the specified profile. Some machines actually generate the specified profile, whereas others have profile templates for the same purpose. Profile-measuring machines are classified based on the method and mechanism used to compare the two profiles. The major types of commercially available profile-measuring machines are discussed next:

1. *Involute Profile-Measuring Instruments or Machines*:

a. *Machines That Use Individual Base-Circle Disks*:

This type of machine generates the specified profile by rolling a disk of the same diameter as the gear base circle with a straightedge, without any slippage. The disks are interchangeable to accommodate various gear sizes.

The gear is mounted between two centers, one of which is the live center that drives the gear. The live center also drives the base-circle disk that is mounted on the other center. A straightedge maintains constant contact with the base-circle disk through a spring-loaded mechanism. Friction between the straightedge and the disk causes simultaneous linear and angular motion of the straightedge. A stylus mounted on the straightedge contacts the gear to be checked and generates an involute profile with respect to the gear tooth profile. Any deviation of the gear tooth profile from the generated profile is recorded either by a dial indicator or by a recording device.

The capacity of these machines ranges from 12 in. in diameter and 18 in. between centers to 36 in. in diameter and 36 in. between centers. Vertical travel of the stylus ranges from 8 to 18 in. The stylus provided with the machine can be used on pitches up to 32, but with suitable styli gears of finer pitch can be checked. For internal gears special goosenecked pointers and mounting adapters are used. Helical gears are checked by rotating the indicating pointer to the helix angle of the gear. The accuracy of this machine is checked by a master involute cam that is calibrated on a dividing head.

b. *Involute Checkers With Permanent Master Base-Circle Disk and Proportional Compensator:*

In this type of involute-checking machine, the master base-circle disk is part of the machine and is not changed for each gear. A compensating disk and bar are provided to adjust for the changing gear base-circle diameters, and compensation is achieved by setting this disk at an appropriate angle. Some models are provided with angular graduations on the compensating disk; this feature permits settings to 0.001 deg through a magnifying device. Capacities of these machines range from 12 to 36 in. in diameter and 14 to 84 in. between centers, and a face width range of full distance between centers. The mounting arrangement and indicating assembly can be adjusted vertically to accommodate different gear sizes. When a model is selected for a particular application, a relatively large ratio between the diameter of the built-in master disk and the anticipated product-base diameters should be specified so that the compensator angle setting is less than 45 deg, which prevents high pressures on the cross slide.

The styli provided with the machine usually accommodate diametral pitch up to 20. Finer pitches require special styli; internal gears require adapters and goosenecked styli. A special attachment also is available to check tooth spacing.

This type of machine provides a choice of settings to check helical profiles. Either the stylus or the whole stylus carrier can be set to the helix angle. Recording devices are available for these machines.

c. *Involute Checkers With Master Involute Cam and Compensating Linkage*:

In these machines the specified gear tooth profile is generated by a cam and a compensating linkage is provided to accommodate various gear sizes. These machines do not require special disks or setup calculations.

Downloaded from http://www.everyspec.com

When mass production parts are inspected, a special device provided with this machine insures duplication of root-angle ranges. The profile of a gear with a roll angle from the base circle to the outside diameter that exceeds the roll angle capacity of the machine can be inspected provided the roll angle from the form diameter to the outside diameter can be accommodated.

In the case of helical gears, readings are registered in the plane of rotation. Goosenecked styli, mounting adapters, and special setting masters are available for internal gears, and an optional recorder is available.

d. *Special Tooth-Profile-Checking Machines*:

This classification includes single-purpose machines for very large gears, fine-pitched gears, and gears with other than involute profiles. These machines are simple to design and build. One type uses the fact that the involute form of a gear with a high number of teeth can be matched very accurately by a substitute circle. Matching by a substitute circle is done by rotating the indicating head about a suitably located pivot. Readings are taken along the tooth profile, and deviations are computed by trial and error. Special tooth-profile-checking instruments can be used for large gears of 39 to 142 in. outside diameter and 0.85 to 12.7 diametral pitch. They are also available for fine-pitched gears from the very smallest up to 6 in. in diameter and from 20 to 120 diametral pitch.

This classification of profile-checking machine has a magnetized straightedge that carries the indicating mechanism and rolls on an interchangeable base-circle segment. It also is equipped with a recorder.

2. *Portable Profile-Measuring Instruments*:

Portable profile-measuring instruments are used for profile inspection of large gears, i.e., gears too large to be mounted in conventional work-holding devices such as arbors and centers, and for gears with only a segment of their profiles accessible. The profiles of spur and helical gears—either external or internal—with coarse pitch also can be inspected in this manner.

Portable profile-measuring instruments use several mechanisms for comparing the specified and actual profiles. Instruments that use individual master templates are the most common. In gear profile inspection with these instruments, the transverse profile of the gear tooth is compared with a template. One extremely accurate master template is required for each gear size checked. Desired profile modifications can be included in the template.

When a portable profile-measuring instrument is set up, the starting position of the follower on the template and that of the indicator on the gear tooth must be correlated carefully. In addition, because of the effect of tooth thickness variations on the relationship between the master template and the gear teeth, adjustments may have to be repeated for each type of gear.

6.2.3.2 Interpretation of Results

A profile trace, or chart, drawn by a profile-measuring machine indicates any departures from true involute, which is represented by a straight line, magnified to a much larger scale. Thus the ordinates of this plot indicate the departure of gear tooth profile from that needed for uniform velocity transmission when engaged with a perfect gear. As shown in Fig. 6-16, excess metal is considered a positive deviation, and insufficient metal a negative deviation. Gear tooth profile tolerances form a band either at the root or tip of the gear tooth. Fig. 6-17 shows these tolerances and the corresponding plots. If the plot of gear tooth profile lies within this band, the gear tooth is within the tolerance.

The entire tooth, from the root to the crown, on both flanks, can be measured on a profile-checking machine. Besides inspecting tooth profiles, this profile plot can be used to control tip chamfer, undercut radius, radius where the fillet blends with the profile, and the crown. Because there is no standard way of checking and charting profiles, it is essential that all charts be accompanied by notes describing the procedure in detail.

Most profile-measuring machines can magnify the profile error between 250 and 500 times, and some can magnify it up to 1000 times. Thus an accurate machine with a sharp stylus can indicate even the surface texture of the gear tooth.

The stylus should be sharp, and the effect of other errors—such as eccentricity and variations in base diameter, pressure angle, or base pitch on the profile chart—must be compensated for to obtain accurate readings.

Downloaded from http://www.everyspec.com

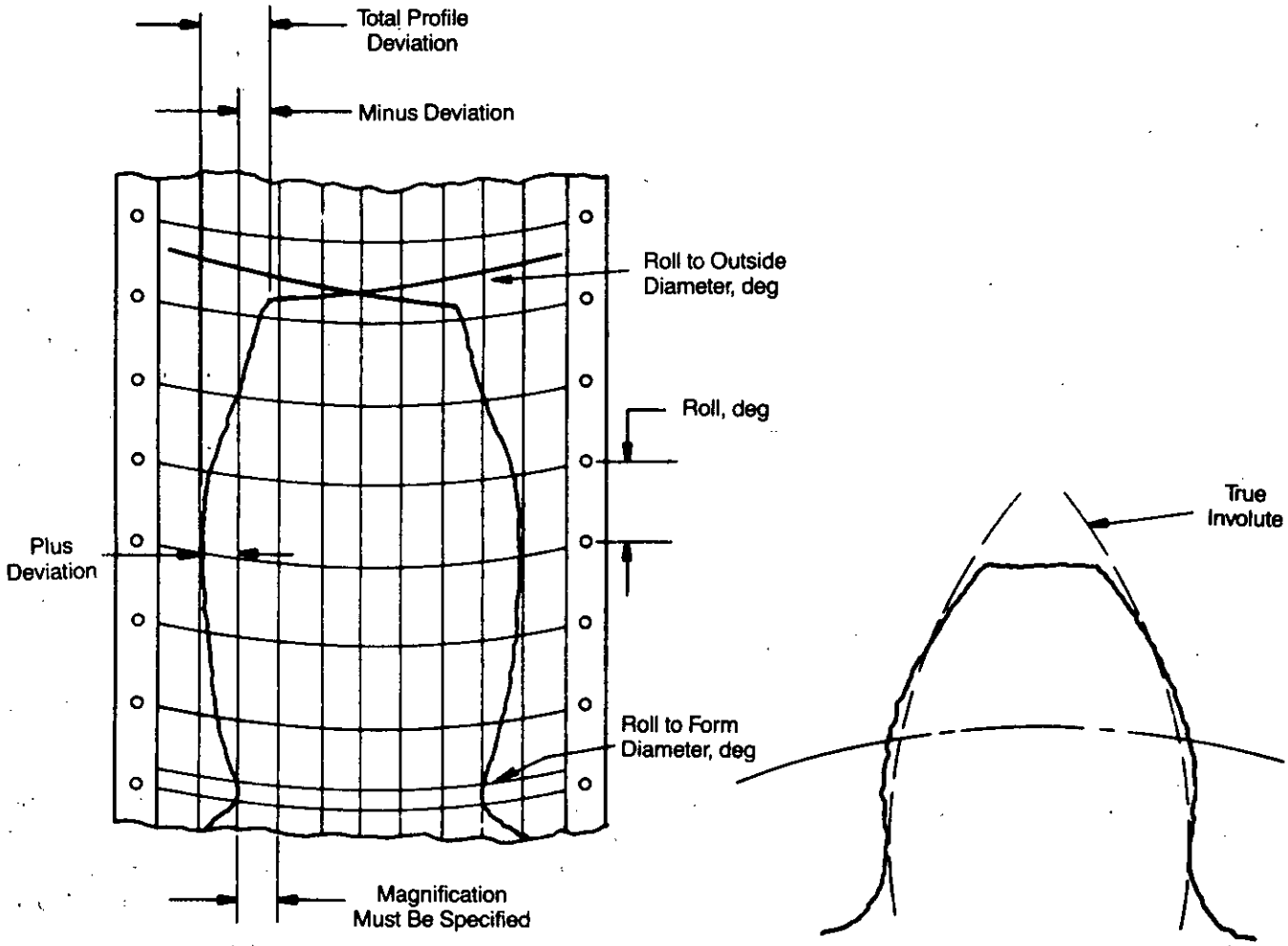

(A) Plot of Profile Deviations

(B) Tooth Profile

From Volume I of the AGMA Gear Handbook, *Gear Classification, Materials, and Measuring Methods for Unassembled Gears* (AGMA 390.03). Copyright © by American Gear Manufacturers Association, 1500 King Street, Suite 201, Alexandria, VA 22314.

Figure 6-16. Tooth Profile and Corresponding Plot

Downloaded from http://www.everyspec.com

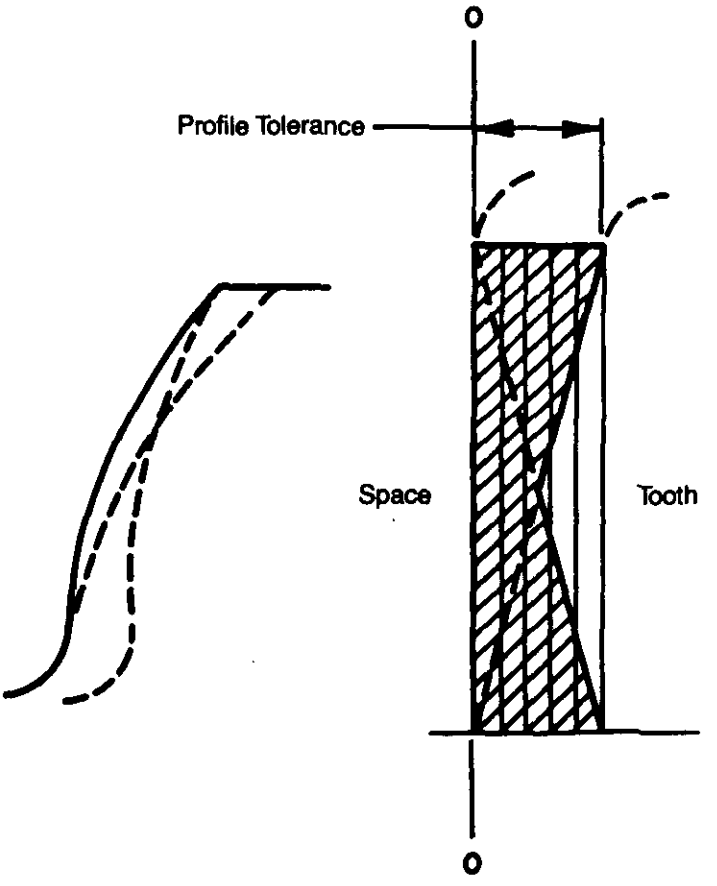

From Volume I of the AGMA Gear Handbook, *Gear Classification, Materials, and Measuring Methods for Unassembled Gears* (AGMA 390.03). Copyright © by American Gear Manufacturers Association, 1500 King Street, Suite 201, Alexandria, VA 22314.

Figure 6-17. Tooth Tolerance and Corresponding Plot

6.2.3.3 Recommended Methods of Inspection

Inspection methods recommended by AGMA are shown in Table 6-3, reproduced from Ref. 1.

6.2.4 LEAD VARIATION

Lead is the axial advance of a helix through one complete turn (Ref. 1).

Lead variation is the difference between the measured and specified lead traces and is measured in the direction normal to the specified lead in the gear (Ref. 1).

6.2.4.1 Measuring Methods

The measuring procedure used in commercially available lead-checking instruments, such as that shown in Fig. 6-18, involves rotating a gear at a specified rate of lead advance per degree of rotation. Simultaneously, a probe mounted on a carriage is advanced parallel to the axis. The probe is connected to an indicating mechanism and measures any deviations normal to the tooth surface at or very near the pitch cylinder. The indicating mechanism can be a dial indicator or an electrical sensor with recorder.

Positioning the stylus to measure the lead of a gear is very important. The required angle of the stylus holder with the gear tooth depends on the type of gear. For a spur gear the holder is held normal to the gear axis and is moved in a direction parallel to the gear axis. In the case of a helical gear, the gear is rotated while the stylus holder traverses in a direction parallel to the axis, and contact is made very close to the pitch line. In actual use, when helical teeth mesh, contact between the teeth is in a plane normal to the plane of rotation. Therefore, the lead variation should be checked in this normal plane. For this purpose the stylus holder is tilted from the vertical by approximately the helix angle of the gear. In this position the up and down motion indicated and

Downloaded from http://www.everyspec.com

TABLE 6-3. RECOMMENDED METHODS OF CONTROL OF PROFILE (Ref. 1)

AGMA Quality Number	Normal Diametral Pitch, in.*	Recommended Methods of Profile Control†								
		Pitch Diameter, in.								
		3/4	1-1/2	3	6	12	25	50	100	200 and over
8 and 9	1/2						1,2	1	1	1
	1					1,2	1,2	1	1	1
	2				1,2	1,2	1,2	1	1	1
	4			1,2	1,2	1,2	1,2	1	1	1
	8		1,2	1,2	1,2	1,2	1,2	1	1	1
	16-19.99	1,2	1,2	1,2	1,2	1,2	1,2	1	1	1
10 and 11	1/2						1,2	1,3	1,3	1,3
	1					2	1,2	1,3	1,3	1,3
	2				2	2	1,2	1,3	1,3	1,3
	4			2	2	2	1,2	1,3	1,3	1,3
	8		2	2	2	2	1,2	1,3	1,3	1,3
	16-19.99	2	2	2	2	2	1.2	1.3	1.3	1.3
12,13, 14, and 15	2				2	2	2	1,3	1,3	1,3
	4			2	2	2	2	1,3	1,3	1,3
	8		2	2	2	2	2	1,3	1,3	
	16-19.99	2	2	2	2	2	2	1,3	1,3	

*The ratio of the number of teeth to the pitch diameter, in.
†Recommended methods;
Number 1—Process control
Number 2—Involute-measuring instruments
Number 3—Portable profile-measuring instrument

From Volume I of the AGMA Gear Handbook, *Gear Classification, Materials, and Measuring Methods for Unassembled Gears* (AGMA 390.03). Copyright © by American Gear Manufacturers Association, 1500 King Street, Suite 201, Alexandria, VA 22314.

recorded by the stylus is the deviation from the desired lead. Fig. 6-19 shows the arrangement for measuring the lead of external spur and helical gears.

Machines are provided with a disk that rolls against a straightedge to measure gears with long leads. A sinebar or similar device is used to translate the tangential movement of the straightedge into an axial movement. Sometimes these machines are built in combination with the involute profile-checking machines.

For measuring worms and for gears with short leads, the machines are provided with a mechanism that uses change gears and a lead screw. The change gears provide the rotary motion while the lead screw provides the axial advance. In combination they generate a helical form that is used to note the deviations from the specified lead.

Downloaded from http://www.everyspec.com

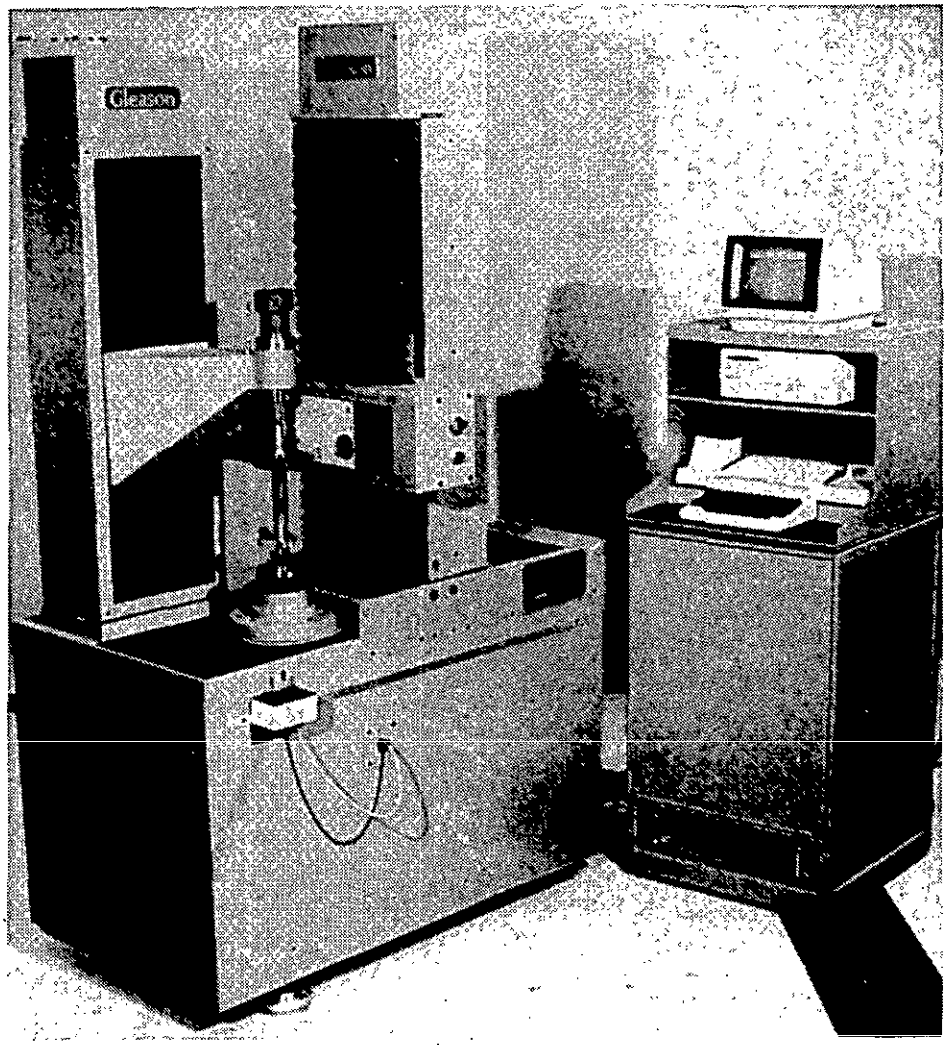

Courtesy of The Gleason Works, Rochester, NY.

Figure 6-18. Lead-Checking Machine

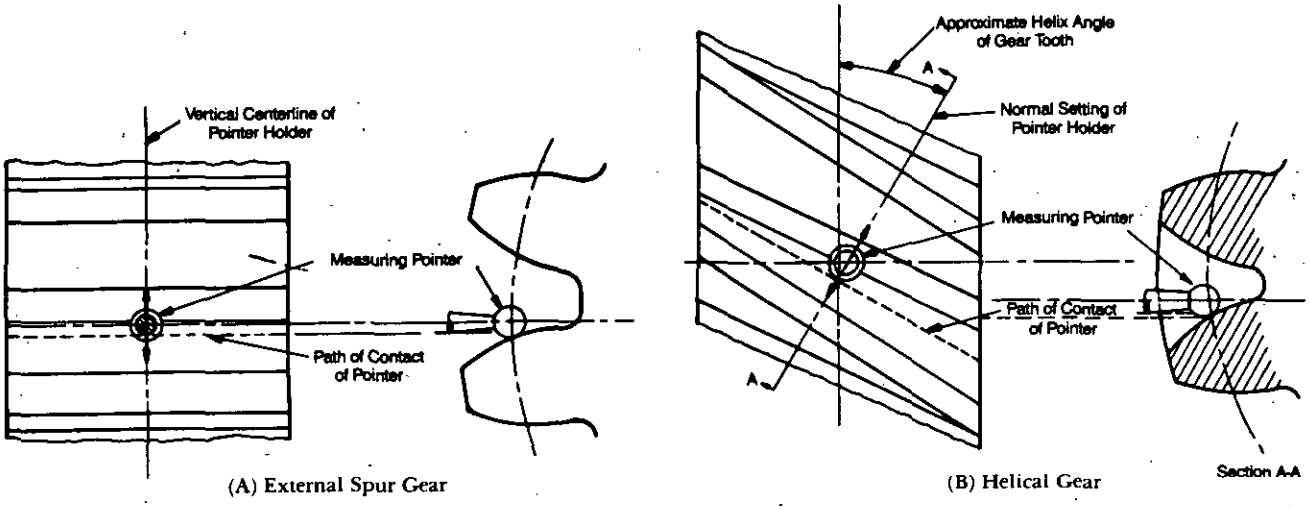

From Volume I of the AGMA Gear Handbook, *Gear Classification, Materials, and Measuring Methods for Unassembled Gears* (AGMA 390.03). Copyright © by American Gear Manufacturers Association, 1500 King Street, Suite 201, Alexandria, VA 22314.

Figure 6-19. Setting of Pointer for External Spur and Helical Gears for Lead Check

Downloaded from http://www.everyspec.com

Very simple devices are required to check spur gears for lead error. Spur gears have infinite leads. The gear is mounted and locked to prevent any rotation while a tooth is checked, and then a cross slide with an indicating mechanism is moved in a direction parallel to the axis of the gear, and the deviations are noted.

6.2.4.2 Recommended Methods of Inspection

Inspection methods recommended by AGMA are shown in Table 6-4, reproduced from Ref. 1.

TABLE 6-4. RECOMMENDED METHODS OF CONTROL OF LEAD (Ref. 1)

AGMA Quality Number	Normal Diametral Pitch, in.*	Recommended Methods of Lead Control†								
		Pitch Diameter, in.								
		3/4	1-1/2	3	6	12	25	50	100	200 and over
8,9, and 10	1/2							1,3	1,3	1,3
	1					1,2	1,2	1,3	1,3	1,3
	2				1,2	1,2	1,2	1,3	1,3	1,3
	4			1,2	1,2	1,2	1,2	1,3	1,3	1,3
	8		1,2	1,2	1,2	1,2	1,2	1,3	1,3	
	16-19.99	1,2	1,2	1,2	1,2	1,2	1,2	1,3	1,3	
11,12, 13,14, and 15	1/2						2	3	3	3
	1					2	2	3	3	3
	2				2	2	2	3	3	3
	3			2	2	2	2	3	3	3
	8			2	2	2	2	3	3	
	16-19.99	2	2	2	2	2	2	3	3	

*The ratio of the number of teeth to the pitch diameter, in.
†Recommended methods;
Number 1—Process control
Number 2—Lead-checking instrument (or lead comparator)
Number 3—Portable-measuring instrument

From Volume I of the AGMA Gear Handbook, *Gear Classification, Materials, and Measuring Methods for Unassembled Gears* (AGMA 390.03). Copyright © by American Gear Manufacturers Association, 1500 King Street, Suite 201, Alexandria, VA 22314.

6.2.4.3 Analysis of Gear Tooth Charts

The gear tooth charts, or graphs, generated by lead-checking instruments indicate the extent that actual lead of the gear deviates from the desired or theoretical lead.

For a right-hand external helical gear, if the recorded line deviates from the datum line in the negative direction, the measured lead is shorter than the specified lead. Similarly, if this line deviates in the positive direction, the measured lead is longer than the specified lead. If the helix is a left-hand type, the direction of stylus traverse is reversed, but the chart interpretation remains the same—i.e., deviation in a negative direction indicates a shorter than specified lead, whereas deviation in a positive direction indicates a longer than specified lead. Figs. 6-20 through 6-23 illustrate the recorded charts for right-hand and left-hand external helical teeth with long and short leads.

The location and amount of gear teeth crowning also can be verified by lead-checking instruments. Figs. 6-24 and 6-25 show adjacent sides of external spur and helical teeth and their recorded graphs, respectively. The two graphs are similar when the amount of crowning is the same. The graphs also indicate the location and magnitude of any displacement of the crowning peak.

Taper in spur and helical gear teeth also can be checked by lead-checking instruments. When the gear teeth are perfect, the lines charted are parallel to each other. As Fig. 6-26 shows, in the case of an external spur gear with tapered teeth, these charted lines are not parallel to each other. Deviation of the charted line from the datum indicates departure from parallelism of the sides of the gear teeth and variation of space width along the face of the gear.

Downloaded from http://www.everyspec.com

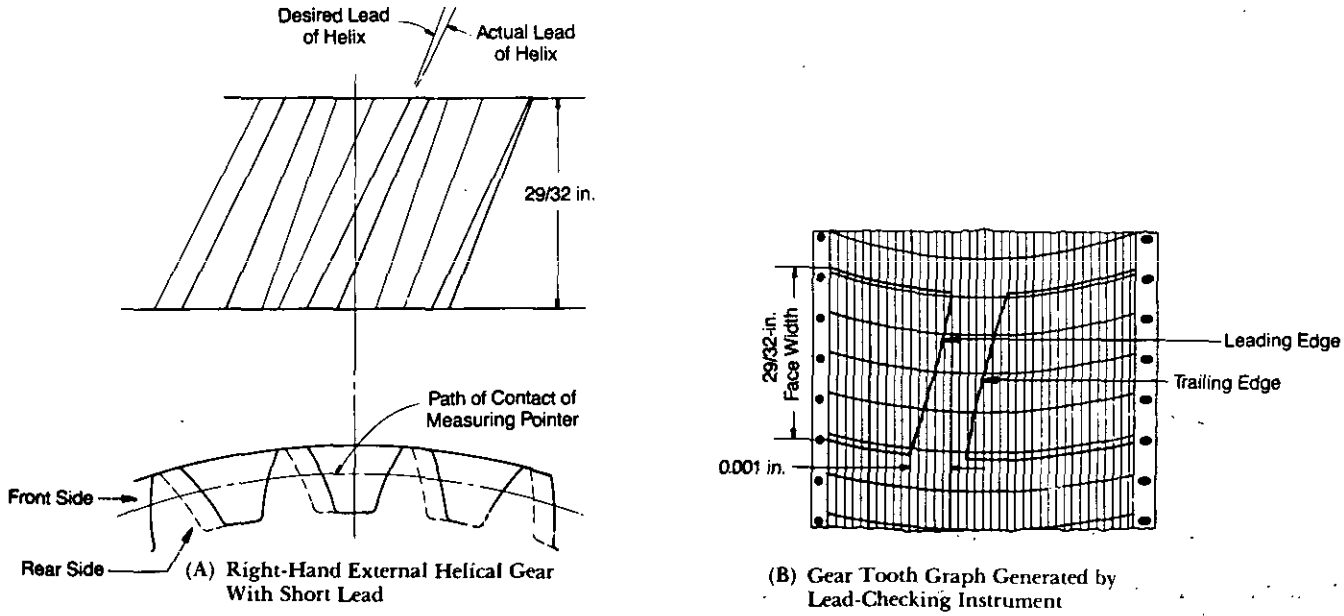

(A) Right-Hand External Helical Gear With Short Lead

(B) Gear Tooth Graph Generated by Lead-Checking Instrument

From Volume I of the AGMA Gear Handbook, *Gear Classification, Materials, and Measuring Methods for Unassembled Gears* (AGMA 390.03). Copyright © by American Gear Manufacturers Association, 1500 King Street, Suite 201, Alexandria, VA 22314.

Figure 6-20. Graph of Right-Hand External Helical Gear Teeth With Short Lead

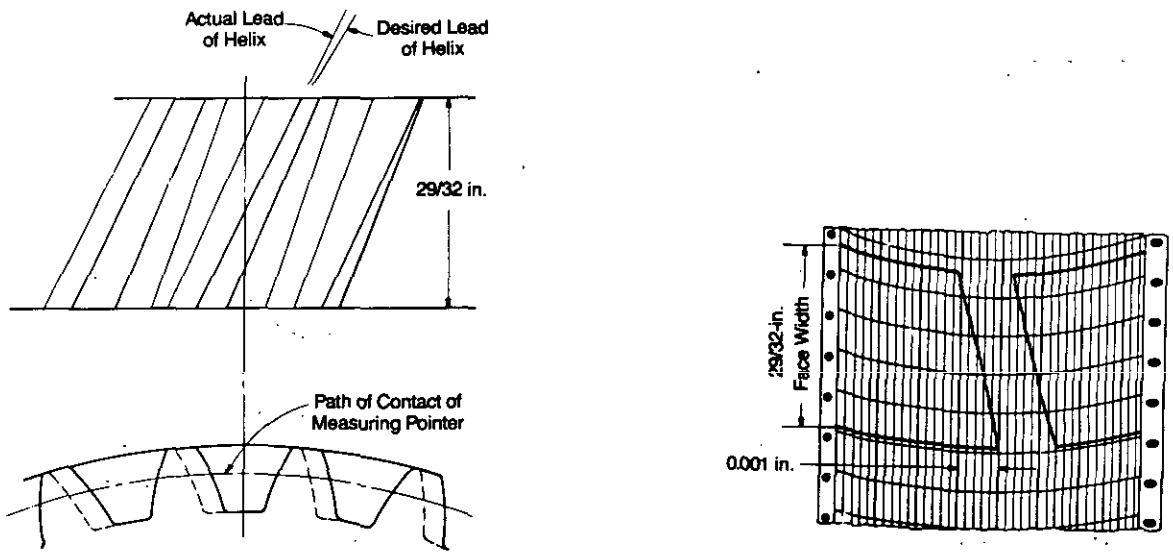

(A) Right-Hand External Helical Gear With Long Lead

(B) Gear Tooth Graph Generated by Lead-Checking Instrument

From Volume I of the AGMA Gear Handbook, *Gear Classification, Materials, and Measuring Methods for Unassembled Gears* (AGMA 390.03). Copyright © by American Gear Manufacturers Association, 1500 King Street, Suite 201, Alexandria, VA 22314.

Figure 6-21. Graph of Right-Hand External Helical Gear Teeth With Long Lead

Downloaded from http://www.everyspec.com

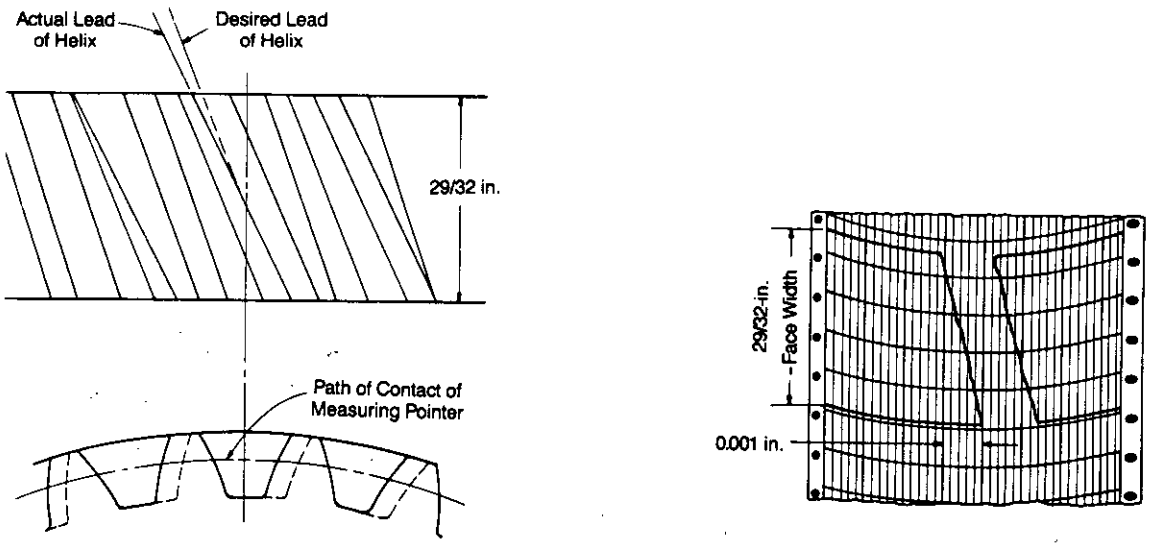

(A) Left-Hand External Helical Gear With Long Lead

(B) Gear Tooth Graph Generated by Lead-Checking Instrument

From Volume I of the AGMA Gear Handbook, *Gear Classification, Materials, and Measuring Methods for Unassembled Gears* (AGMA 390.03). Copyright © by American Gear Manufacturers Association, 1500 King Street, Suite 201, Alexandria, VA 22314.

Figure 6-22. Graph of Left-Hand External Helical Gear Teeth With Long Lead

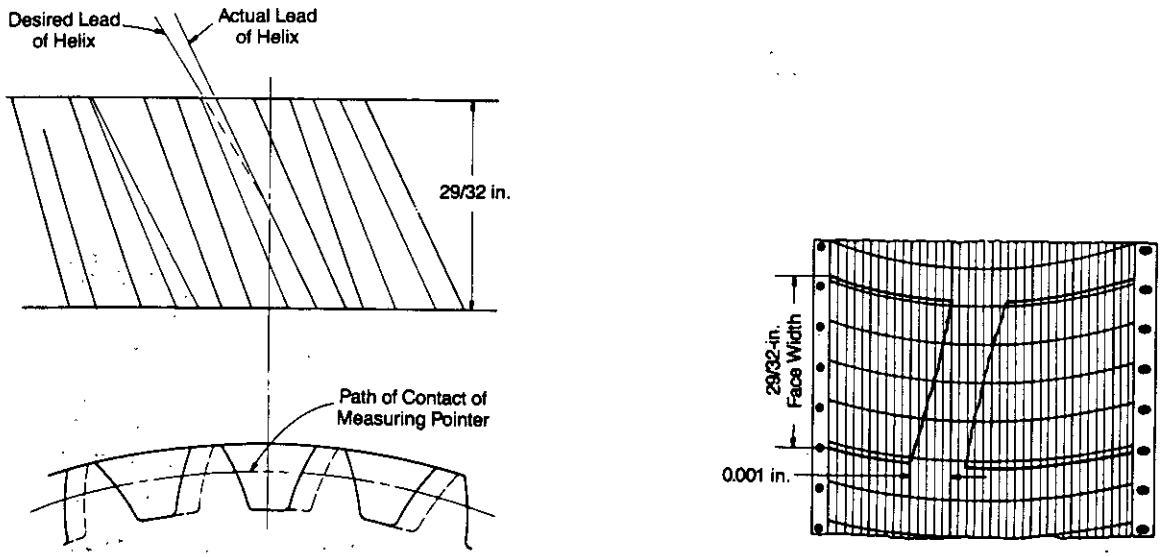

(A) Left-Hand External Helical Gear With Short Lead

(B) Gear Tooth Graph Generated by Lead-Checking Instrument

From Volume I of the AGMA Gear Handbook, *Gear Classification, Materials, and Measuring Methods for Unassembled Gears* (AGMA 390.03). Copyright © by American Gear Manufacturers Association, 1500 King Street, Suite 201, Alexandria, VA 22314.

Figure 6-23. Graph of Left-Hand External Helical Gear Teeth With Short Lead

Downloaded from http://www.everyspec.com

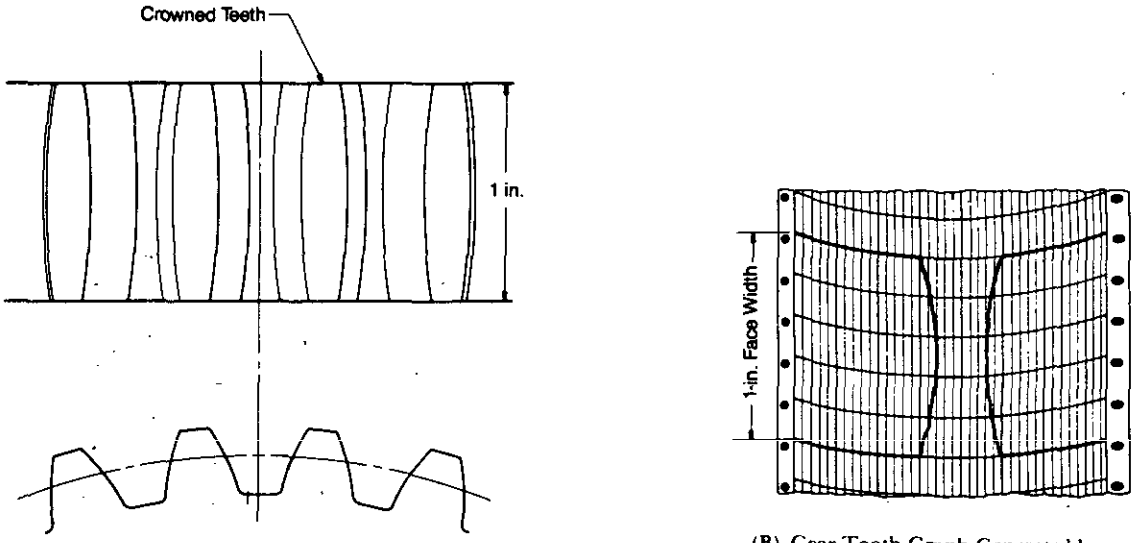

(A) External Spur Gear With Crowned Teeth

(B) Gear Tooth Graph Generated by Lead-Checking Instrument

From Volume I of the AGMA Gear Handbook, *Gear Classification, Materials, and Measuring Methods for Unassembled Gears* (AGMA 390.03). Copyright © by American Gear Manufacturers Association, 1500 King Street, Suite 201, Alexandria, VA 22314.

Figure 6-24. Graph of External Spur Gear With Crowned Teeth

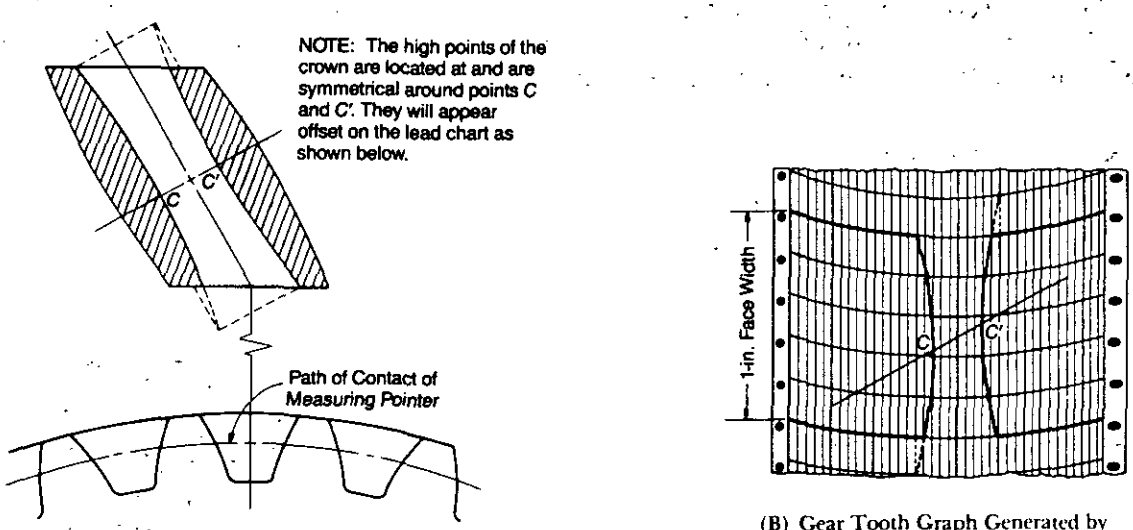

(A) External Helical Gear With Crowned Teeth

(B) Gear Tooth Graph Generated by Lead-Checking Instrument

From Volume I of the AGMA Gear Handbook, *Gear Classification, Materials, and Measuring Methods for Unassembled Gears* (AGMA 390.03). Copyright © by American Gear Manufacturers Association, 1500 King Street, Suite 201, Alexandria, VA 22314.

Figure 6-25. Graph of External Helical Gear With Crowned Teeth

Downloaded from http://www.everyspec.com

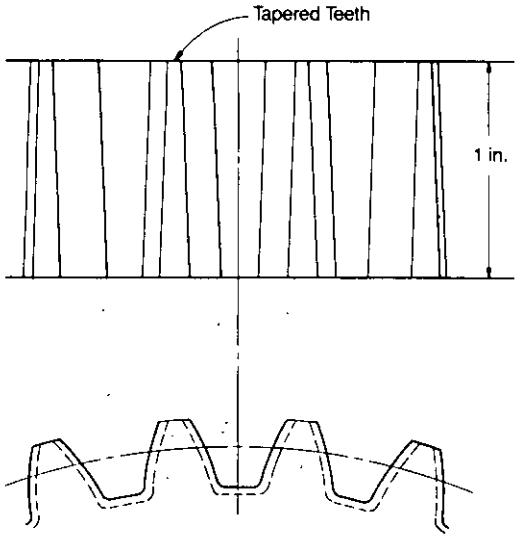

(A) External Spur Gear With Tapered Teeth

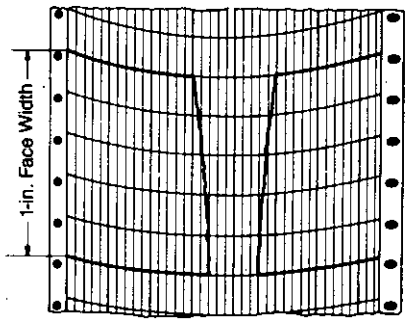

(B) Gear Tooth Graph Generated by Lead-Checking Instrument

From Volume I of the AGMA Gear Handbook, *Gear Classification, Materials, and Measuring Methods for Unassembled Gears* (AGMA 390.03). Copyright © by American Gear Manufacturers Association, 1500 King Street, Suite 201, Alexandria, VA 22314.

Figure 6-26. Graph of External Spur Gear With Tapered Teeth

Fig. 6-27 shows lead error and taper in the teeth of a helical gear. Taper in the teeth is indicated by the plotted lines that deviate more on one side of the tooth space than on the other, and deviation in lead is shown by the dotted line located midway between the two charted lines.

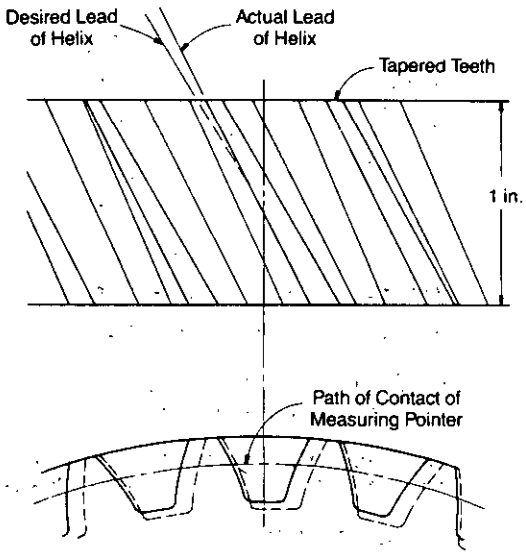

(A) External Helical Gear With Tapered Teeth

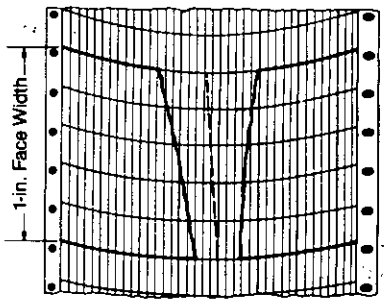

(B) Gear Tooth Graph Generated by Lead-Checking Instrument

From Volume I of the AGMA Gear Handbook, *Gear Classification, Materials, and Measuring Methods for Unassembled Gears* (AGMA 390.03). Copyright © by American Gear Manufacturers Association, 1500 King Street, Suite 201, Alexandria, VA 22314.

Figure 6-27. Graph of External Helical Gear With Tapered Teeth and Lead Variation

Downloaded from http://www.everyspec.com

6.2.5 COMPOSITE ACTION METHOD OF GEAR INSPECTION

Composite error is total variation caused by more than one of the basic types of errors, such as runout, and by variations in pitch, profile, and lead (Ref. 1). It is measured as the variation in center distance when the product gear (a gear being inspected) is rolled in a tight mesh (double-flank contact) with a specified gear (a reference, standard, or master gear) of spur, helical, or herringbone type. In the case of bevel, hypoid, or worm gears—when testing by the double-flank method—composite error is measured as variation in mounting distance, i.e., the amount of movement of the pinion in a direction normal to the pinion axis.

The composite action method is also known as gear roll testing. The variations that can be inspected by this method are tooth-to-tooth composite variations; total composite variations; functional tooth thickness; and, in certain cases, runout. Usually this method is used for mass-produced, medium-to fine-pitched gears.

The composite action gear checker or gear-rolling fixture is used in this method. As Fig. 6-28 shows, this gear checker consists of a fixture with two shaft centers—one fixed and the other movable—mounted parallel to each other. A master gear is mounted on one and the product gear on the other. Tight mesh between the two gears is insured either by a spring-loaded mechanism or a suspended weight that exerts a predetermined force on the movable center. A reference center distance at tight mesh is established between the two centers, and the two gears are rotated. Variation in the center distance is indicated either by a dial indicator or sensed by an electrical or electronic device and plotted on a graph.

Fig. 6-29 shows a graph from a typical test. The center distance variation is charted here. Spur gears are tested on this type of fixture. Nonparallel shaft gears, such as bevel gears and worm gears, are tested in checkers equipped with an arrangement for mounting the shafts at the appropriate angles. Composite gear testers are usually available for gear sizes up to 12 in. in diameter, for medium and fine pitches, and for either straight or helical types. They are accurate to ±0.0005 in.

Straight racks or worm sections sometimes are used in place of master gears. Racks have a straight-sided tooth form that can be manufactured very accurately. Larger gears need longer racks, however, and the longer the rack, the more difficult it is to manufacture.

6.2.5.1 Measurement of Tooth-to-Tooth Composite Variation

As each tooth passes through the meshing action with the master, it leaves a definite pattern on the chart. This pattern includes the effects of tooth-to-tooth variations that result from the combined effect of variations in pitch, profile, and tooth thickness. The frequency of these variations equals the number of teeth in the gear. It is essential for this check that all teeth be clean and free of foreign particles because these particles can substantially influence the results, especially in fine-pitched gears. A persistent and high "kick" in the graph is considered a major defect.

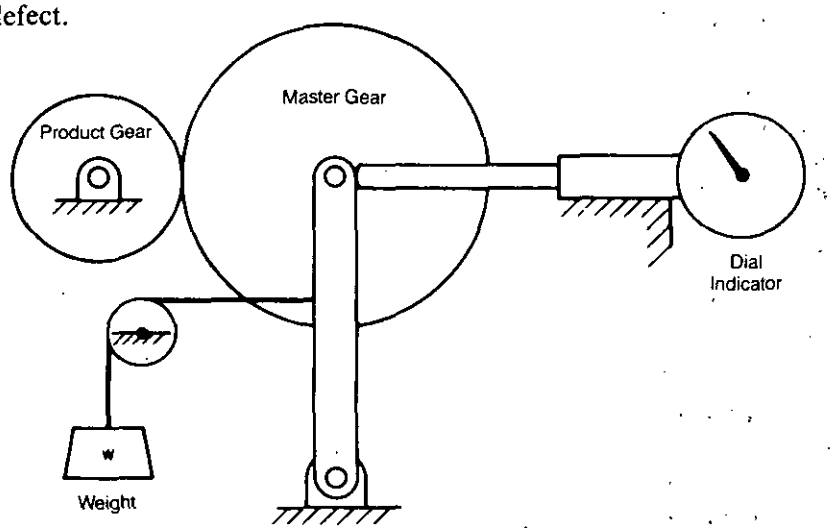

From Volume I of the AGMA Gear Handbook, *Gear Classification, Materials, and Measuring Methods for Unassembled Gears* (AGMA 390.03). Copyright © by American Gear Manufacturers Association, 1500 King Street, Suite 201, Alexandria, VA 22314.

Figure 6-28. Gear-Rolling Fixture With Suspended Weight

Downloaded from http://www.everyspec.com

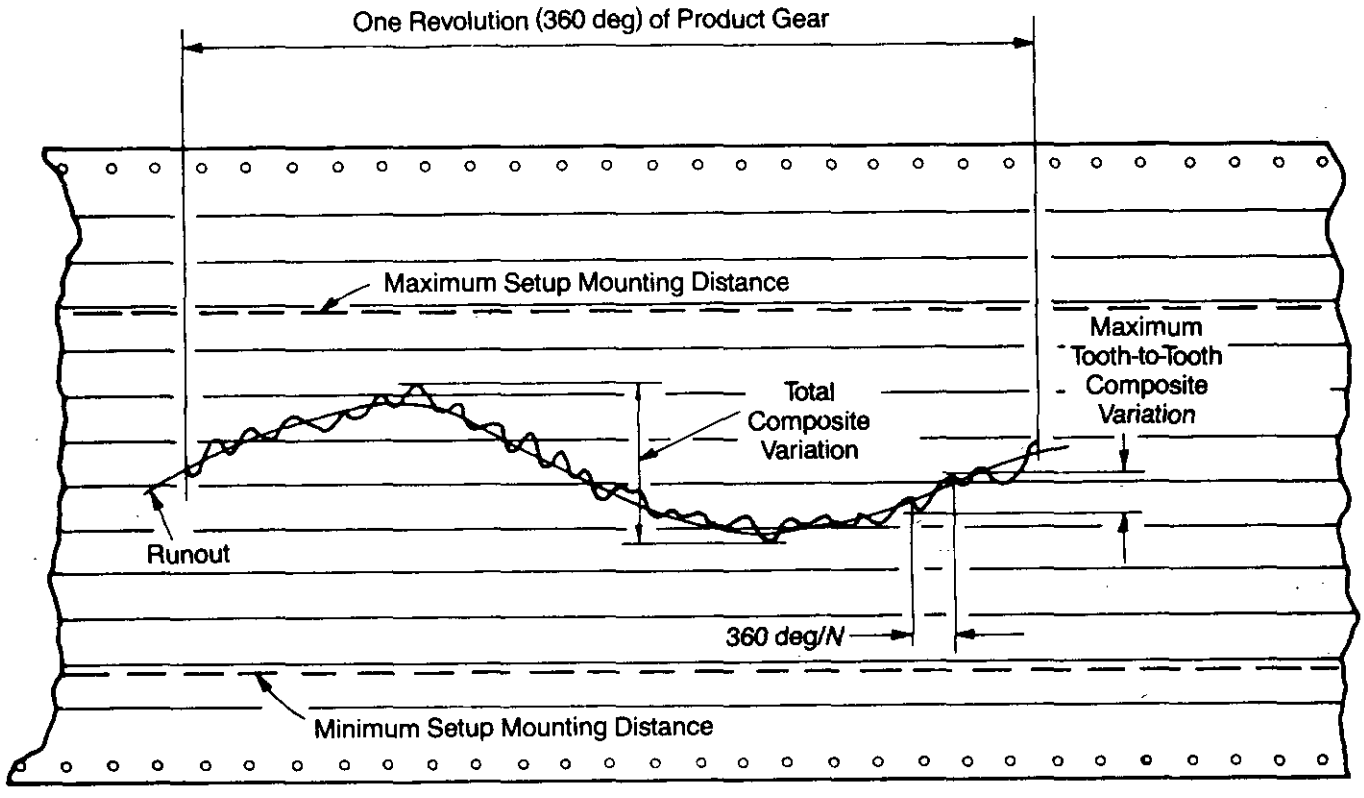

From Volume I of the AGMA Gear Handbook, *Gear Classification, Materials, and Measuring Methods for Unassembled Gears* (AGMA 390.03). Copyright © by American Gear Manufacturers Association, 1500 King Street, Suite 201, Alexandria, VA 22314.

Figure 6-29. Graph of Gear Tooth Variations Obtained From a Rolling Test

6.2.5.2 Measurement of Total Composite Error

Total composite error is computed by rolling the gears together several times and taking the average of the variation readings. On the graph it is indicated by the total amplitude of the resultant curve of one revolution. Because the reading consists of composite errors in both the product and master gears, compensation has to be made for the composite error in the master gear. The procedure for accepting or rejecting a gear based upon total composite error follows (Ref. 1).

Let:

a = total composite reading, as read on chart or dial indicator, in.

b = total composite variation in master gear, obtained from calibration, in.

c = total composite tolerance shown on drawing, in.

Then, the following cases apply:

If $a + b \leq c$, the product is acceptable.

If $a \geq b + c$, the product is rejected.

If $a \leq b + c$, the accept or reject decision must be made after phasing. Phasing is done by indexing the master with respect to the product gear, repeating the test, and analyzing results. The product gear is acceptable if the highest of the phased readings meets the condition $a \leq b + c$.

6.2.5.3 Measuring Functional Tooth Thickness

In this procedure the thickness of each tooth of the gear determines the depth of penetration of the gears at mesh, which in turn determines the setup mounting distance. As the gears rotate, the mounting distance varies. For quick analysis in gear shops, two lines indicating the extreme limits of mounting distance are drawn on a graph. These lines are obtained when the gear-rolling fixture is calibrated. For the gear to be acceptable, the trace of the rolling gears must lie between extreme limits on the graph.

The composite action method for measuring tooth-to-tooth composite variation, total composite error, and

Downloaded from http://www.everyspec.com

functional tooth thickness has several advantages over other gear inspection methods. The testing conditions simulate actual operating conditions very closely. All teeth are inspected over the entire active tooth form because they mesh up to the working depth. Tooth-to-tooth averaging effects are included as they would be in actual operation. It is a very quick test and, therefore, is used in most general workshop applications. Even burrs and damage caused to the profile by careless handling, which are not easily detected by other methods, can be detected with the composite action test.

The composite action method has some disadvantages. It indicates only composite error and not individual variations, so choosing a corrective action is very difficult. Additionally, the quality of the master gear substantially affects the test result.

6.2.6 SINGLE-FLANK TESTING

Single-flank testing is a form of composite testing in which the gears roll together at the proper center distance with backlash and with only one flank in contact (Ref. 2). The test is run with optical encoders, which measure rotational motion. The optical encoders may be attached to the input and output shafts of a special machine for testing pairs of gears, or they can be used portably by attaching them directly to the input and output shafts of an actual gear box to inspect the quality of a complete train of gears. The data from the encoders are processed in an instrument that shows the accuracy or smoothness of rotational motion that results from the meshing of the two gears (transmission errors). Fig. 6-30 shows schematically the principle of operation (Ref. 3).

Data generated by single-flank testing can be directly related to involute or profile errors, pitch variation, runout, and accumulated pitch variation. Lead errors cannot be measured by this method. Fig. 6-31 shows an example of single-flank testing data as recorded on a strip chart and identifies the individual errors revealed by single-flank testing (Ref. 3). Refer to Refs. 2 and 3 for a detailed description of single-flank testing and the measurement, and also for interpretation of the generated data.

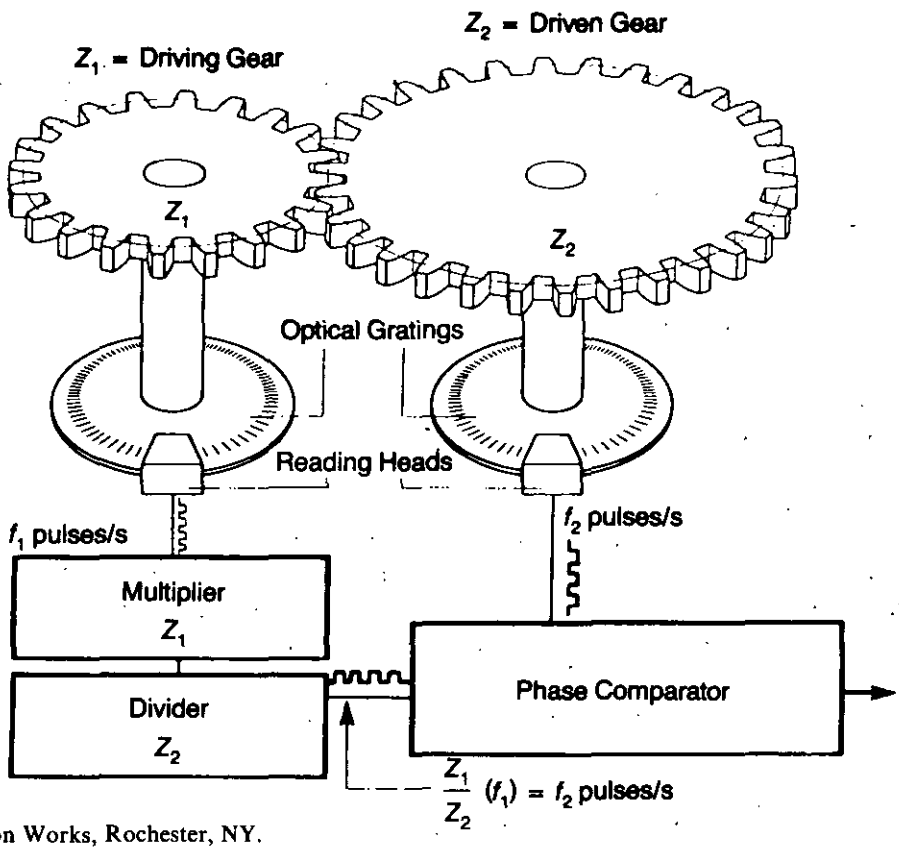

Courtesy of The Gleason Works, Rochester, NY.

Figure 6-30. Schematic of Single-Flank Testing

Downloaded from http://www.everyspec.com

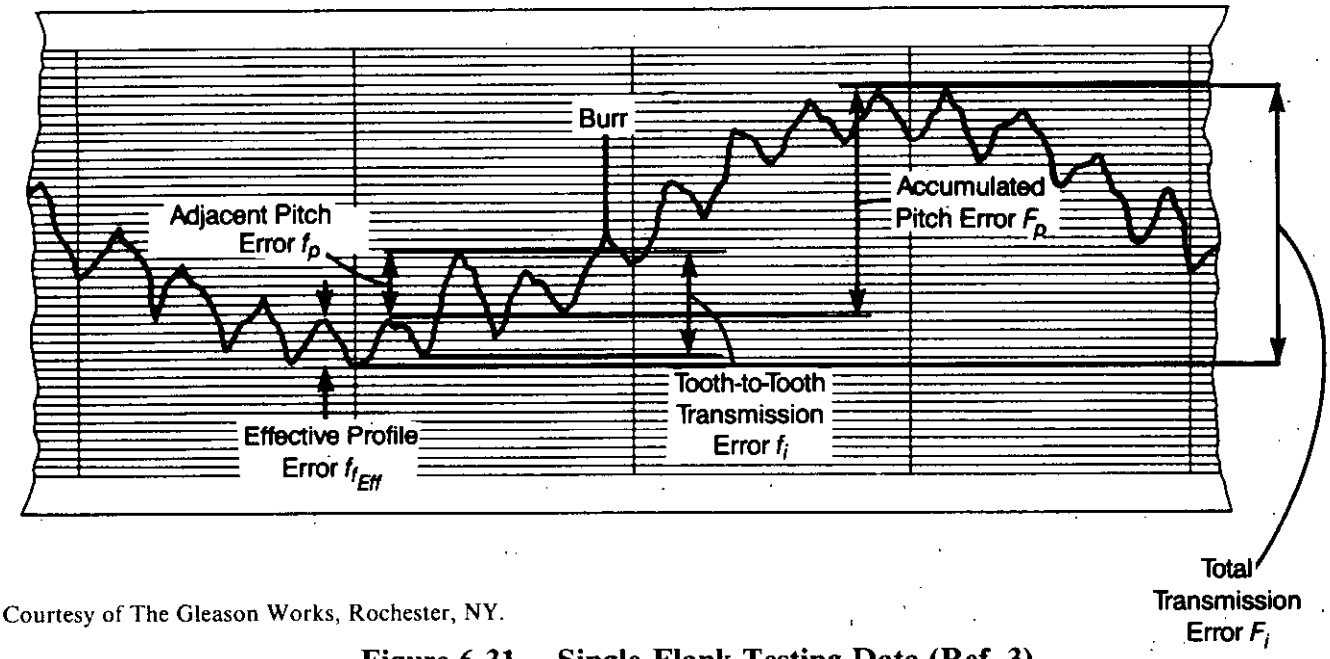

Courtesy of The Gleason Works, Rochester, NY.

Figure 6-31. Single-Flank Testing Data (Ref. 3)

6.2.7 TOOTH THICKNESS VARIATION

The tooth thickness of a gear is the circular—or linear for racks—thickness at a specified diameter or tooth height (Ref. 1).

Correct tooth thickness is important for the proper functioning of gears; therefore, all types of gears—crude to highly accurate—are checked for tooth thickness. The required accuracy of the check varies with the class of gear. Extremely accurate gear applications may require examination of all teeth, whereas crude gear applications may require examination of only one tooth. For in-between cases, four teeth 90 deg apart can be measured and the average thickness calculated.

6.2.7.1 Methods of Measurement

Various measurement methods are

1. *Vernier Tooth Calipers*:

As Fig. 6-32 shows, the vernier tooth caliper is provided with vertical and horizontal vernier scales, both of which are equipped with locking screws. A tongue is used as a resting point for the caliper, and the vertical scale reads the distance between this tongue and the tips of the vernier jaws.

Before the gear is measured, the vertical scale is preset so the jaws reach the specified diameter or tooth height where tooth thickness is to be measured. Usually the tooth thickness is specified at the pitch circle diameter. Before tooth thickness can be measured, it is necessary to measure the outside diameter of the gear. If this diameter is larger or smaller than is specified, the setting of the gear tooth caliper must be changed to compensate for the difference. The amount of compensation should be one half the difference between the specified and actual diameters, and the direction of compensation is determined by comparing the two diameters. If the actual diameter is larger, one half the difference must be added; if smaller, one half the difference must be subtracted from the setting of the vertical scale of the caliper.

This compensation also can be made by setting the vertical scale at the corrected addendum and then measuring the thickness on the horizontal scale. The corrected addendum A_c is either obtained from tables or calculated from (Ref. 2)

$$A_c = A + \frac{1}{2}(PD)(1 - \cos\frac{90}{N}), \text{ in.} \tag{6-2}$$

Downloaded from http://www.everyspec.com

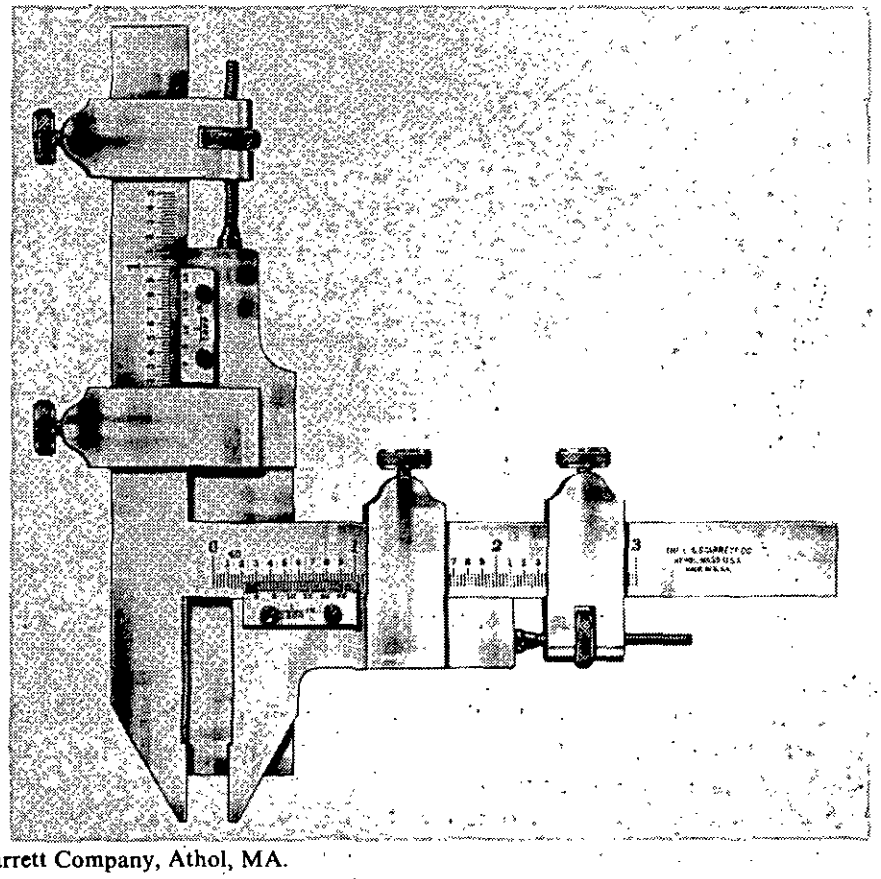

Courtesy of the L. S. Starrett Company, Athol, MA.

Figure 6-32. Vernier Tooth Caliper

where

A = addendum, i.e., the perpendicular distance from pitch circle to top of tooth, in.
PD = pitch diameter, in.
N = number of teeth, dimensionless.

Eq. 6-2 yields chordal thickness, which must be converted to circular measurement.

The advantages of using gear tooth calipers include low costs, ease of use, and results accurate enough for nonprecision applications.

The gear tooth caliper has several limitations. Because the outside diameter is used as a reference, any runout or other error in this diameter can affect the results. The thickness measured is chordal and therefore involves mathematical computation for conversion to circular measurements. Physical limitations of calipers do not allow tooth thickness measurement of fine-pitched gears. The caliper jaws rest against the tooth profile, which causes jaw wear and also subjects the results to the effects of tooth profile inaccuracies. Accurate readings require a skilled operator. Caliper setting accuracy cannot surpass 0.002 in. The addendum must be corrected for every gear; this requirement makes the process cumbersome and complicated.

2. *Span Measurement by Using Vernier Caliper or Plate Micrometer*:

A vernier caliper or plate micrometer is used to measure the distance over several gear teeth. The measurement read in this way is always along a line tangent to the base circle—the circle from which involute tooth profiles are measured—and, therefore, independent of runout and variations in outer diameter. The plate micrometer is placed to span each set of teeth and repositioned to register the maximum possible reading. As shown in Fig. 6-33, several positions exist where the instrument can correctly indicate this maximum dimension. The number of teeth spanned varies, but three teeth usually are preferred.

Downloaded from http://www.everyspec.com

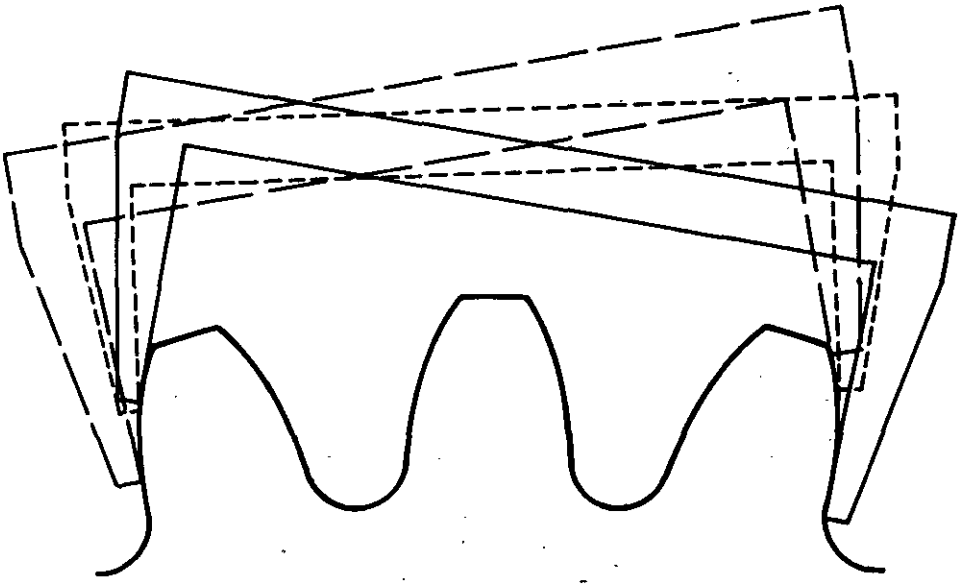

Figure 6-33. Few of Possible Arrangements Indicating Correct Reading in Span Measurement

The span method has several distinct advantages. Because the measurements are taken over several teeth, the variations are averaged; this method results in better accuracy. Because the outside diameter is not used as a reference, variations in outside diameter do not affect the results. Even large gears can be inspected in this manner, and a skilled operator is not required.

This method also has some limitations. It cannot be used in cases where, due to tooth geometry, the caliper cannot span a sufficient number of teeth. (A combination of large helix angle and narrow face width can create such a situation.) Errors in base pitch, tooth profile, and lead affect the accuracy of the reading. If even a portion of the tooth profile is a modified involute, the readings are erroneous.

3. *Measurements Over Pins or Over Rack-Shaped Blocks.* In this method pins or rack-shaped blocks are inserted between gear teeth, and measurements are taken over these pins or blocks. This method usually is used to measure tooth thickness of high-precision gears, but its use is not limited to these gears. For involute spur gears of diametral pitch coarser than 20, ANSI/AGMA Standard 2002-B88, *Tooth Thickness Specification and Measurement* (Ref. 4), presents standardized pin diameters, pin measurement tables, and equations. For standard involute spur gears, the tables present standard pin diameters as a function of normal diametral pitch. For spur gears of diametral pitch 20 or finer, ANSI/AGMA Standard 2000-A88 (Ref. 5), applies.

4. *Measuring Center Distance at Tight Mesh:*

Measuring center distance at tight mesh is an indirect way of measuring tooth thickness and is used mostly for mass-produced, high-precision gears. A master gear of known tooth thickness is selected and is meshed very tightly (4 to 6 lb) with the product gear. At this point, the center distance between the two gears is measured. The gears are rotated until the next set of teeth comes in contact, and the reading is recorded again. This procedure is repeated for all gear teeth. If the variation in center distance is within acceptable limits for the product gear, it is accepted. When several gears are to be inspected, the maximum and minimum allowable setup center distances are established. A gear whose center distance at mesh with the master gear falls within the limits has acceptable tooth thickness. The absolute value of tooth thickness can be obtained by substituting the tooth thickness of the master gear in the basic equations derived from the geometry of the meshing gears. Accuracy up to ±0.0002 in. can be achieved by this method.

A primary advantage of measuring center distance at tight mesh is that all teeth are checked quite rapidly. The tooth thickness obtained is "effective tooth thickness" because it is measured continuously with rotation, and all local tooth thickness variations are averaged out as the teeth contact along their entire profiles.

5. *Measuring of Backlash at Operating Center Distance.* Measuring backlash at operating center distance is another indirect way of measuring the functional tooth thickness of gears. The pinion and gear are

Downloaded from http://www.everyspec.com

accurately mounted at the operating center distance. The backlash is measured as explained in par. 6.2.8.2. This measurement is made at least at four locations 90 deg apart around the gear. The gear tooth thickness is calculated from the average backlash based on the geometric relationship between them.

6. *Addendum Comparator*:

An addendum comparator is a device for measuring tooth thickness by comparing the gear addendum with that of a basic rack. As shown in Fig. 6-34, the comparator has jaws that have the same angle as the pressure angle of the gear being inspected. The comparator jaws are first set to the proper width by using a steel block that simulates a rack tooth of appropriate diametral pitch, and the dial indicator is set to read zero. The gear tooth being checked is inserted between these jaws, and the depth of penetration is indicated by a dial indicator. When inserted between the jaws, a thin tooth will penetrate farther than the steel block and register a plus indicator reading, whereas a thick tooth will not penetrate as far as the steel block and will register a minus indicator reading. The difference between the rack tooth thickness and the thickness of the gear tooth being inspected is the variation in gear tooth thickness Δt_n and is given by

$$\Delta t_n = 2C_r \tan\theta, \text{ in.} \tag{6-3}$$

where

C_r = addendum comparator reading, in.
θ = preessure angle, deg.

Because this process uses the outside diameter of the gear for reference, any dimensional variation and taper of the outside diameter of the gear must be compensated for.

6.2.7.2 Recommended Methods of Inspection

Inspection methods recommended by AGMA are shown in Table 6-5, reproduced from Ref. 1.

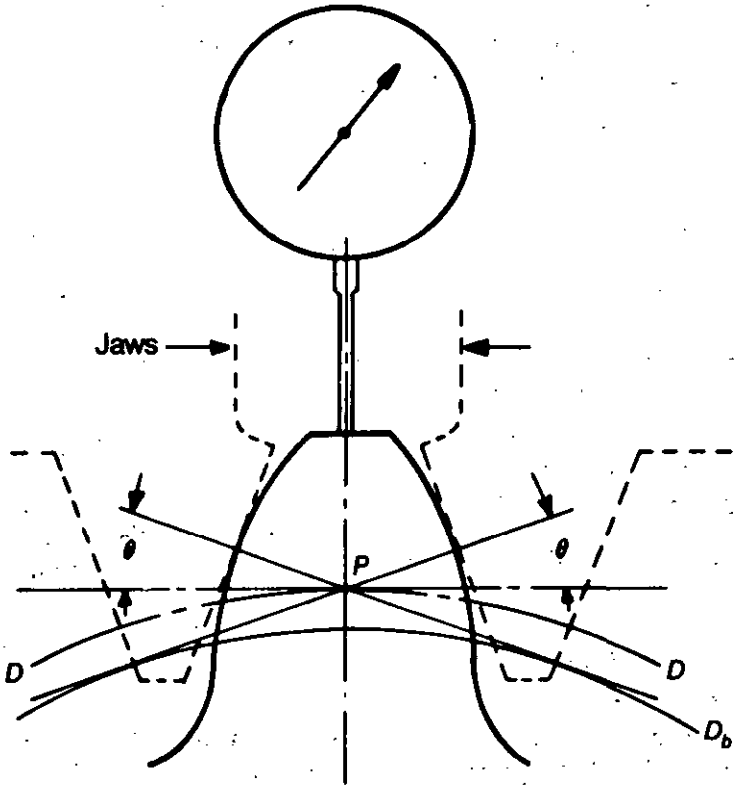

Figure 6-34. Addendum Comparator in Use

Downloaded from http://www.everyspec.com

TABLE 6-5. RECOMMENDED METHODS OF CONTROL OF TOOTH THICKNESS (Ref. 1)

Tooth-Thickness Tolerance	Method Number	Measuring Method*
0.002 in. or more	1	Process Control
	2	Tooth Caliper
0.001 in. to 0.002 in.	3	Addendum Comparator
	4	Span Measurement
0.001 in. or less	5	Measurement Over Pins (or Over Rack-Shaped Blocks)
	6	Measurement of Center Distance at Tight Mesh
	7	Measurement of Backlash at Operating Center Distance

*A measuring method giving a higher degree of accuracy may be used to measure thickness tolerances of any lower degree of accuracy.

From Volume I of the AGMA Gear Handbook, *Gear Classification, Materials, and Measuring Methods for Unassembled Gears* (AGMA 390.03). Copyright © by American Gear Manufacturers Association, 1500 King Street, Suite 201, Alexandria, VA 22314.

6.2.8 TOOTH CONTACT PATTERN

The method of tooth contact pattern is used to check the entire active profile of the gear teeth. It is accomplished on a gear-testing machine or on a setup where gears can be mounted and rolled together. A numerical evaluation of individual parameters cannot be obtained, but the extent of variation is indicated quite accurately. Teeth of one of the gears are coated with a marking compound, and the gears are rolled to obtain the tooth contact pattern. The entire area of contact is then imprinted on the teeth of the other gear. This imprint is studied and, conclusions are drawn about the accuracy of the gears and their performance.

6.2.8.1 Spur, Helical, and Herringbone Gears

A tooth contact pattern is obtained by mounting the product gear and a master gear on a gear-testing machine and rolling the two together under a light load for a few seconds. This method is quite accurate; however, the repeatability of readings depends on the mounting accuracy and the load applied during inspection. Both factors must be specified for each test.

6.2.8.2 Bevel and Hypoid Gears

The tooth contact pattern for bevel and hypoid gears can be observed through testing machines with special adjustments. These adjustments are

1. Axial adjustments for gear and pinion (In this setup the product gear could be a gear or a pinion and the master gear must be its counterpart.)
2. Repositioning of one axis with respect to the other for hypoid gear testing.

These adjustments facilitate simulation of actual operating conditions for these gears. Axial adjustment of the pinion is used to simulate the effect of change in pressure angle, whereas axial adjustment of the gears is used to control the amount of backlash. The pressure angle θ is the angle at a pitch point between the line of pressure, which is normal to the tooth surface, and the plane tangent to the pitch surface. The pressure angle gives the direction of the normal to a tooth profile (Ref. 1). Sometimes vertical movement of the axes simulates changes in the spiral angle. Necessary changes to the setup for gear manufacturing can be estimated if contact patterns are observed under simulated operating conditions. It is convenient to use the vertical and horizontal check, previously known as V and H check, to check contact pattern length and bias on spiral and hypoid gears. For more details on these checks, refer to Ref. 1.

6.2.9 BACKLASH VARIATION

6.2.9.1 Definition and Types

Backlash in gears is defined as clearance or play between mating tooth surfaces (Ref. 1).

Normal backlash is backlash at the tightest point of mesh at the pitch circle in a direction normal to tooth surfaces in assembled gears (Ref. 1).

Downloaded from http://www.everyspec.com

Normal backlash can be converted to transverse backlash by dividing the value of normal backlash by the product of the cosine of the lead angle, i.e., 90 deg minus the helix angle, and the cosine of the pressure angle θ (Ref. 1).

Backlash variation is the difference between maximum and minimum backlash in a given pair of gears. This value includes the runout in each member (Ref. 1).

6.2.9.2 Measuring Methods for Backlash Variation

Methods for measuring backlash variation are

1. *Indicator Method.* The backlash of a product gear can be measured when it is assembled in a proper mesh with a master gear. Proper mesh exists when the center distance equals the sum of the pitch radii of the master gear and the gear to be inspected. The master gear is locked firmly in position, and a dial indicator probe is set against a flank normal to the surface of any tooth of the product gear. The product gear is rotated back and forth, and the maximum dial indicator reading is recorded. This reading represents the backlash between the product gear and the master. Fig. 6-35 indicates the required setup for backlash measurement. The same procedure is used to obtain backlash variation between a pair of mating gears. The master gear is replaced by the mating gear, backlash is measured for all teeth, and backlash variation is obtained by calculating the difference between maximum and minimum backlash values.

2. *Gear-Tooth Vernier Caliper.* Backlash can also be evaluated by measuring the tooth thicknesses of mating gears, which can be obtained by using the gear tooth vernier caliper as explained in par. 6.2.7. For a bevel gear, tooth thickness is measured at the large end of the tooth.

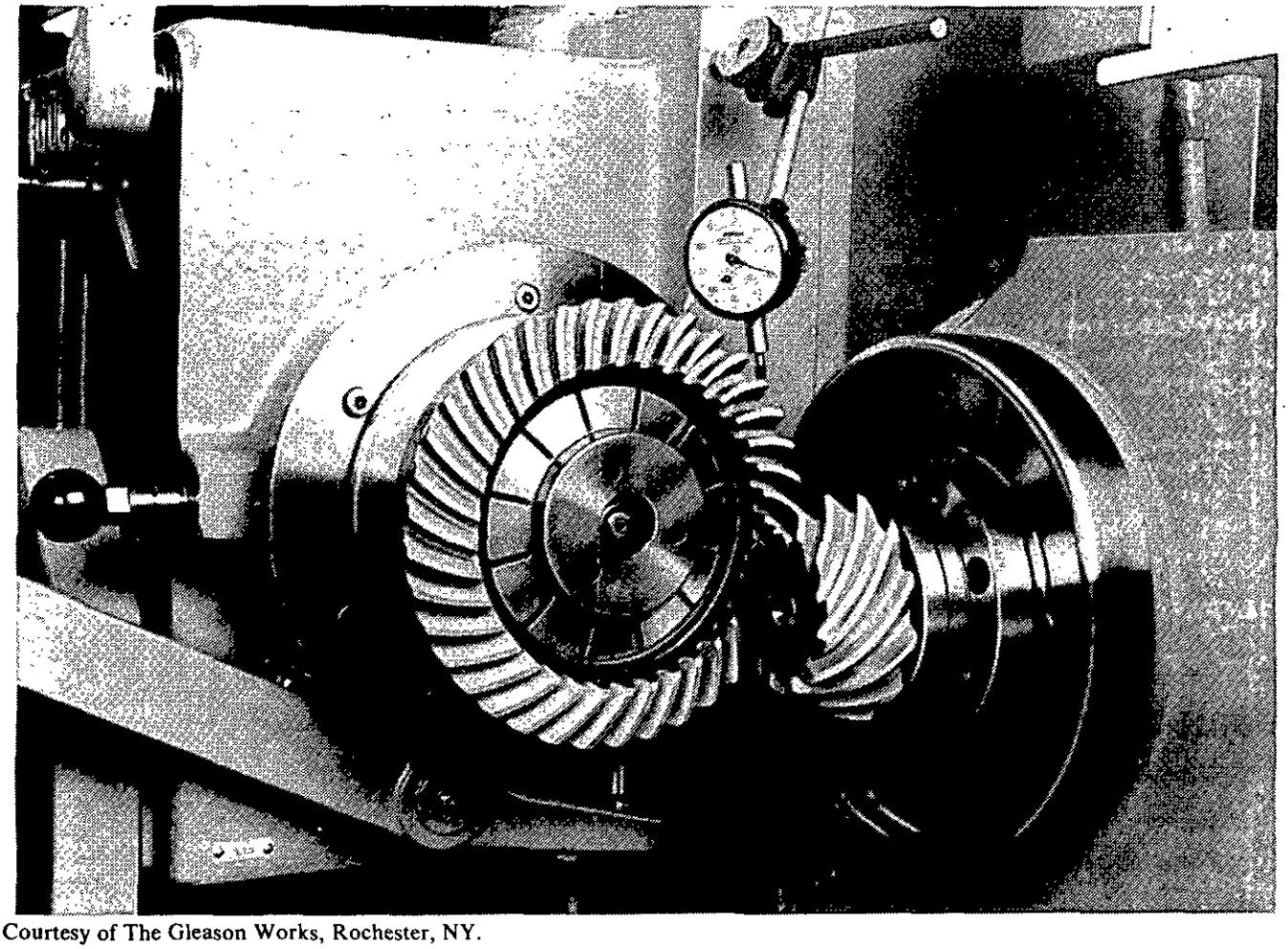

Courtesy of The Gleason Works, Rochester, NY.

Figure 6-35. Indicator Method of Blacklash Measurement

Downloaded from http://www.everyspec.com

REFERENCES

1. *Gear Handbook: Volume 1. Gear Classification, Materials and Measuring Methods for Unassembled Gears*, American Gear Manufacturers Association, Alexandria, VA, 1980.
2. Paul Giblin, *An Introduction to Single-Flank Testing of Gears, Interpretation of Data and Application to Problem Solving*, The Gleason Works, Rochester, NY, Undated.
3. Robert E. Smith, *Single-Flank Gear Testing*, The Gleason Works, Rochester, NY, Undated.
4. ANSI/AGMA Standard 2002-B88, *Tooth Thickness Specification and Measurement*, American Gear Manufacturers Association, Alexandria, VA, 1988.
5. ANSI/AGMA Standard 2000-A88, *Gear Classification and Inspection Handbook — Tolerances and Measuring Methods for Unassembled Spur and Helical Gears*, American Gear Manufacturers Association, Alexandria, VA, 1988.

BIBLIOGRAPHY

C. W. Kennedy and D. E. Andrews, *Inspection and Gaging*, Fifth Edition, Industrial Press, Inc., New York, NY, 1977.

E. Oberg, F. D. Jones, H. L. Horton, and P. B. Schubert, Eds., *Machinery's Handbook*, 21st Edition, Industrial Press, Inc., New York, NY, 1980.

F. T. Farago, *Handbook of Dimensional Measurement*, Industrial Press, Inc., New York, NY, 1968.

Precision Measurement in the Metalworking Industry, Department of Education of International Business Machines Corporation, Syracuse, NY, 1978.

J. W. Greve, and F. W. Wilson, Eds., *Handbook of Industrial Metrology*, Publication Committee, American Society of Tool and Manufacturing Engineers, Prentice-Hall, Inc. Englewood Cliffs, NJ, 1967.

ANSI Y14.5M-1982, *Dimensioning and Tolerancing*, American Society of Manufacturing Engineers, New York, NY, 1982.

Product Assurance Pamphlet, *Final Acceptance Inspection and Test Equipment Design (FAITE) Design Policy and Philosophy*. (Including Supplements A to E), AMSWE-WE-P-702-105, US Army Weapons Command, Picatinny Arsenal, Dover, NJ, 1971.

Gage Design Manual for Ordnance Materiel, Ordnance Department, Army Services Forces, Washington, DC, 1945.

ANSI B92.1-1970, *Involute Splines, Serrations and Inspection*, American Society of Mechanical Engineers, New York, NY 1970.

D. W. Dudley, Ed., *Gear Handbook*, First Edition, McGraw-Hill Book Company, Inc., New York, NY, 1962.

Downloaded from http://www.everyspec.com

CHAPTER 7
BASIC GAGES

Basic gages are described in detail in this chapter along with design procedures and examples. Where standards are available, gages have been classified according to American Gage Design Standards.

7.0 LIST OF SYMBOLS

A = outside diameter of countersink-type flush pin gage, in.
A_1 = diameter of cylindrical portion of flush pin for drilled hole, in.
A_2 = diameter of conical portion of flush pin for drilled hole, in.
A_L = length of bar on bar-type flush pin gage, in.
B = pin diameter on countersink-type flush pin gage, in.
B_L = barrel diameter of barrel-type flush pin gage, in.
B_p = distance from end of bar to pin on bar-type flush pin gage, in.
C = barrel length of barrel-type flush pin gage, in.
D = minimum drilled hole diameter, in.
D_1 = minimum pin length of flush pin gage for drilled hole, in.
D_2 = maximum pin length of flush pin gage for drilled hole, in.
D_3 = length of conical portion of pin of flush pin gage for drilled hole, in.
D_G = pin length (gaging dimension) of flush pin gage, in.
G = tolerance zone for pin length of flush pin gage for drilled hole, in.
L = minimum depth of cylindrical portion of drilled hole, in.
R = corner radius, in. (gaging dimension)
T = tolerance on L, in.
t = gage maker's tolerance on gaging dimension, in.
ϕ = angle of conical portion of pin of flush pin gage for drilled hole, deg
θ = angle of drill point, deg

7.1 INTRODUCTION

Inspection with standard measuring equipment often involves cumbersome setups, adjustments, reading of absolute measurements, calculations, comparisons, and calibration. Because gaging does not involve measurement, it is a quicker method for determining whether a product feature is within specified dimensional limits. In the case of mass-produced parts, the higher capital cost associated with gaging is more than offset by the savings resulting from low inspection costs per piece.

The major criteria for selecting standard measuring equipment—required accuracy, ease of operation, and economy—are also the primary considerations in gage selection. In addition to these major selection criteria, factors such as the feature dimension to be inspected and product geometry must be considered. Choice of an inappropriate gage can result in unnecessary rejection of acceptable products, acceptance of unacceptable products and increased inspection costs. Procedures are presented in this chapter for choosing a particular gage design or construction within each major gage category.

A gage that wears during the gaging process should be provided with a proper amount of wear allowance to prolong its useful life. For example, "Go" gage elements are subjected to constant wear and will quickly depart from the basic size and accept defective parts if sufficient wear allowance is not provided. Alternatively, wear allowances are not provided for "Not Go" gages because parts are not expected to enter the gages; consequently, there is no wear. Gage tolerances are provided on all gages because it is impossible to manufacture a gage exactly at its basic dimensions. The larger the amount of gage maker's tolerance, the cheaper and easier it is to manufacture the gage. Gage tolerance and wear allowance, however, both reduce the

Downloaded from http://www.everyspec.com

allowable manufacturing tolerance. Based on experience, 6 to 10% of product tolerance is the generally recommended gage tolerance. For various product sizes and tolerance ranges, gage tolerances and wear allowances have been computed and are presented in tabular form in this chapter. The tabular values are recommended but not mandatory. These tolerance ranges are derived from experience with the most frequently used gage materials. For special product and gage material combinations, gage tolerances and wear allowances may be computed on the basis of the gage designer's knowledge and experience.

The seven gage categories included in this chapter encompass all the major gage types used in manufacturing. These categories are plug, ring, snap, flush pin, template, receiver, and progressive gages. Some of the gages discussed in this chapter maybe known by other names.

The American National Standards Institute (ANSI) publication *Gage Blanks*, ANSI B47.1 (Ref. 1), is the primary source of terminology, definitions, and gage classifications used in this chapter. This standard was originally developed by the American Gage Design Committee and is commonly known as the American Gage Design (AGD) Standard.

Gages have been designed by using AGD standard blanks and other hardware for the most commonly used categories of gages. Pertinent design data are included in the current military standards (MIL-STD). At one time, gages manufactured to specifications in these military standards were available, but stocks of gages are no longer maintained.

7.2 PLUG GAGES

A plug gage is used for dimensional control of internal features such as holes and slots. It consists of a handle, a gaging member (or members), and a suitable means of locking them together. The plug gage cannot detect out-of-roundness, taper, and bell-mouth in holes. If these defects are a primary concern, a dial bore gage (internal mechanical comparator) should be used.

To inspect an internal diameter, two cylindrical gaging members are needed. One of these members is made to the minimum limit and the other to the maximum limit of the internal diameter. These are known as the "Go" and "Not Go" gaging members respectively. If the "Go" gage enters the hole, the hole is not too small, and if the "Not Go" gage does not enter the hole, the hole is not too large. Thus when the "Go" gage enters and the "Not Go" gage does not, the internal diameter is within specified limits.

7.2.1 TYPES

Plug gages can be categorized as either standard or special. The AGD Standard (Ref. 1) designates four designs of standard plug gages based on the dimension of the internal diameter to be inspected. These designs are the wire-type, taperlock, trilock, and annular. The special plug gages are designed for a particular product configuration. The most frequently used special plug gages include taper, flat, pilot, cylindrical stepped, recessed, spline, serration, thread, and keyway gages. Spline, serration, thread, and keyway plug gages are used to inspect interrupted diameters and, therefore, are discussed in Chapter 8.

Plug gages are further categorized as single-ended, double-ended, or progressive, depending upon their mode of operation. The single-ended gage is a single-purpose gage and has either a "Go" or a "Not Go" gaging member mounted on the handle. In double-ended construction "Go" and "Not Go" gaging members are mounted on opposite ends of the same handle. The progressive plug gage also performs both the "Go" and "Not Go" gaging functions but has the gaging members mounted in succession on the same end of the handle. These three functional categories are illustrated in Fig. 7-1.

7.2.1.1 Standard Plug Gages

A discussion of these gages follows:

1. *Wire-Type*. The wire-type plug gage is recommended for gaging internal diameters from greater than 0.010 in. to, and including, 1.010 in. It is called wire-type because the diameter of the gaging member is small and cylindrical throughout it length. This type of gage is available in single- and double-ended construction. Fig. 7-2 shows details of single- and double-ended wire-type plug gages. The wire-type member or members are firmly held in a hexagonal, collet-type handle. The gaging member should extend from the handle by at least the length of the internal diameter. After one end is worn-out, the gaging member is reversed in the collet to

Downloaded from http://www.everyspec.com

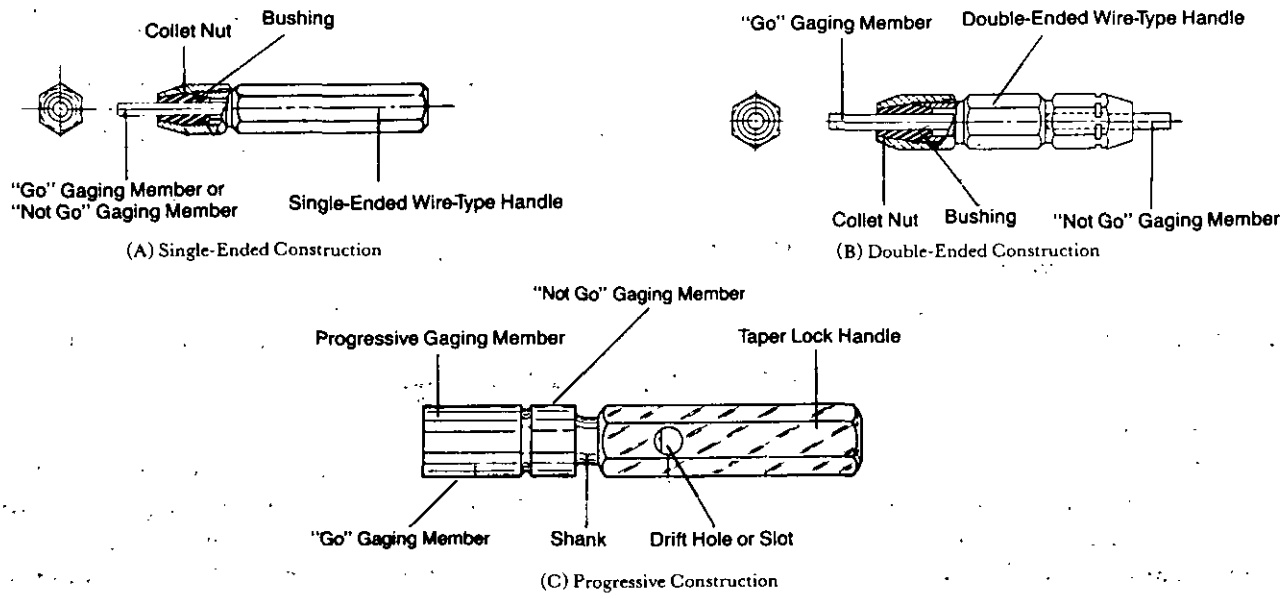

From ANSI B47.1-1981, *Gage Blanks*. Copyright © 1981 by The American Society of Mechanical Engineers, New York, NY.

Figure 7-1. Single-Ended, Double-Ended, and Progressive Plug Gages

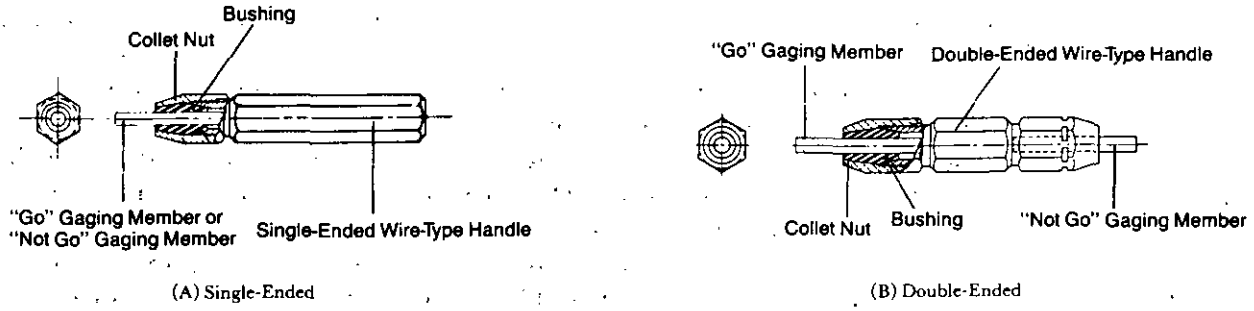

From ANSI B47.1-1981, *Gage Blanks*. Copyright © 1981 by The American Society of Mechanical Engineers, New York, NY.

Figure 7-2. Wire-Type Plug Gages

increase the useful life of the gage. Because wire-type plugs wear out first at the tip, the accuracy can be regained by grinding off 1/32 to ⅛ in. from the end of the plug.

2. *Taperlock*:

The taperlock plug gage is recommended for gaging internal diameters from greater than 0.059 in. to, and including, 1.510 in. The name taperlock is derived from the shape of the gaging member shank and the method of securing it to the handle. The shank is tapered and fits snugly into a tapered hole in the handle. Drift holes or slots are provided near the "Go" end of the handle for inserting a pin used to drive out the gaging member. After removing the "Go" gage member, a longer rod may be run through the hollow handle to remove the "Not Go" plug. Taperlock plug gages are available in single-ended, double-ended, and progressive designs. Fig. 7-3 shows details of construction of double-ended and progressive taperlock plug gages.

Although the taperlock design is simple and inexpensive, its main disadvantage is its size limitation. This gage design is not preferred for large dimensions because a heavy gaging member has a tendency to sag as a result of the tapered shank and handle, and this sagging causes nonuniform wear and inaccurate gaging.

The progressive taperlock construction has the advantage of allowing a hole to be gaged in a single motion. However, it suffers from two disadvantages in addition to the size limitation. First, it is more expensive to build than other types of taperlock gages. Second, when the "Go" gaging member wears out, the entire gage has to be scrapped, even though the "Not Go" gage may still be within limits and capable of accurate gaging.

Downloaded from http://www.everyspec.com

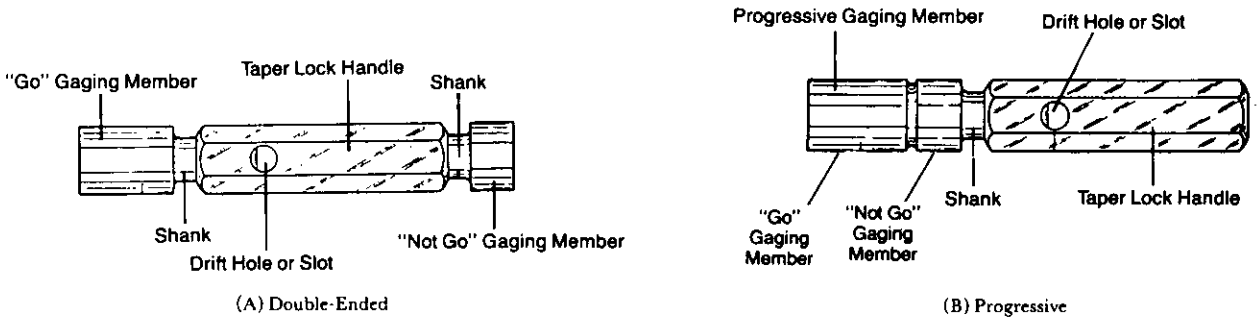

From ANSI B47.1-1981, *Gage Blanks*. Copyright © 1981 by The American Society of Mechanical Engineers, New York, NY.

Figure 7-3. Taperlock Plug Gages

3. *Trilock*:

This design is recommended for gaging internal diameters ranging from greater than 0.760 in. to, and including, 8.010 in. The name trilock is also derived from the method of securing the gaging member to the handle. The handle has three wedge-shaped locking prongs that engage with corresponding grooves in the gaging member. A single screw running through the center of the handle provides a self-centering support and a positive lock; these features result in a very rigid gage. The useful life of the gage can be increased by reversing the plug within the handle when one end is worn-out.

Standard dimensions for trilock design handles and gaging members have been established to insure interchangeability. Single- and double-ended handles, as shown in Fig. 7-4, are available.

The main advantage of the trilock plug gage is that the rigidity provided by the locking arrangement is as good as that of a single-piece solid gage. There is no chance of a shake or "wink". Thus the operator can get the sensitive feel that is necessary in plug gaging. This type of gage also has a long life and is very economical because of its rigidity and the reversibility of the gaging member.

4. *Annular*. The annular plug gage is recommended for gaging internal diameters larger than 8.010 in. For a diameter this large, other types of plug gages would be heavy, bulky, and difficult to handle. The annular plug gage is built like a flywheel with a rim and web; this design results in the lightest gage that meets strength and performance requirements. The center portion is bored out to reduce further weight, and a set of four tapped holes is provided on the web for mounting the gage on a faceplate during manufacture. Two of these holes are later used to mount ball handles on the gaging member. Fig. 7-5 shows the details of construction of the annular plug gage.

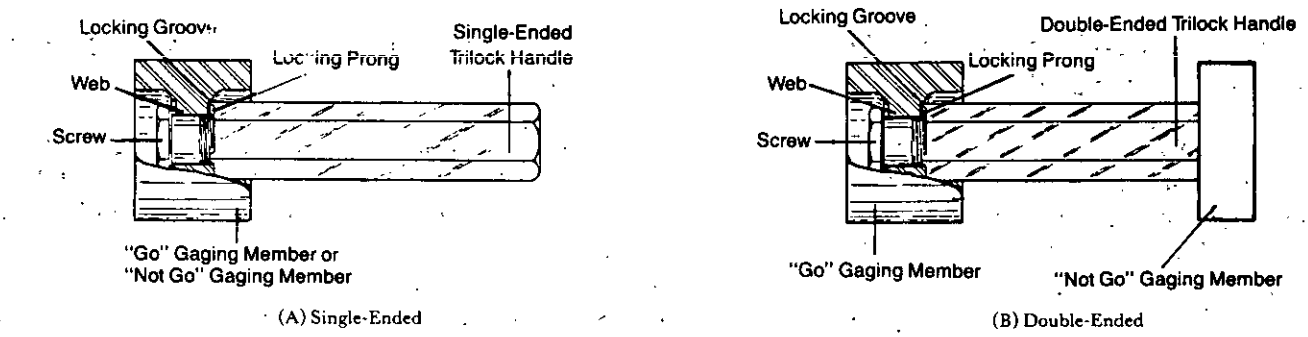

From ANSI B47.1-1981, *Gage Blanks*. Copyright © 1981 by The American Society of Mechanical Engineers, New York, NY.

Figure 7-4. Trilock Plug Gages

Downloaded from http://www.everyspec.com

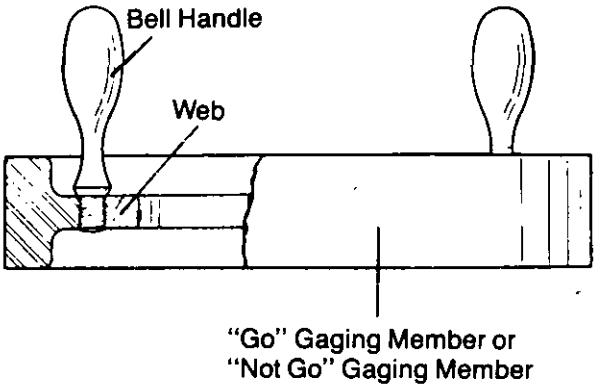

From ANSI B47.1-1981, *Gage Blanks*. Copyright © 1981 by The American Society of Mechanical Engineers, New York, NY.

Figure 7-5. Annular Plug Gage

7.2.1.2 Special Plug Gages

A discussion of these gages follows:

1. *Taper*. Taper plug gages are designed to gage the taper in an internal diameter. The principle used is that the depth of penetration of the gage is directly proportional to the taper in the internal diameter. Complete inspection of a tapered hole requires two taper plug gages—one to check the diameter at each end of the hole. Each gage has an appropriately sized step ground into the larger gaging member. If, after insertion, the edge of the product internal diameter falls between the two levels of the step, as shown in Fig. 7-6, the product is acceptable. If the product internal diameter does not fall between the two levels of the step, the product is rejected. The plug diameter and tolerance, taper, and step size and location are mathematically derived from the product hole diameter—i.e., its depth, taper, and tolerance.

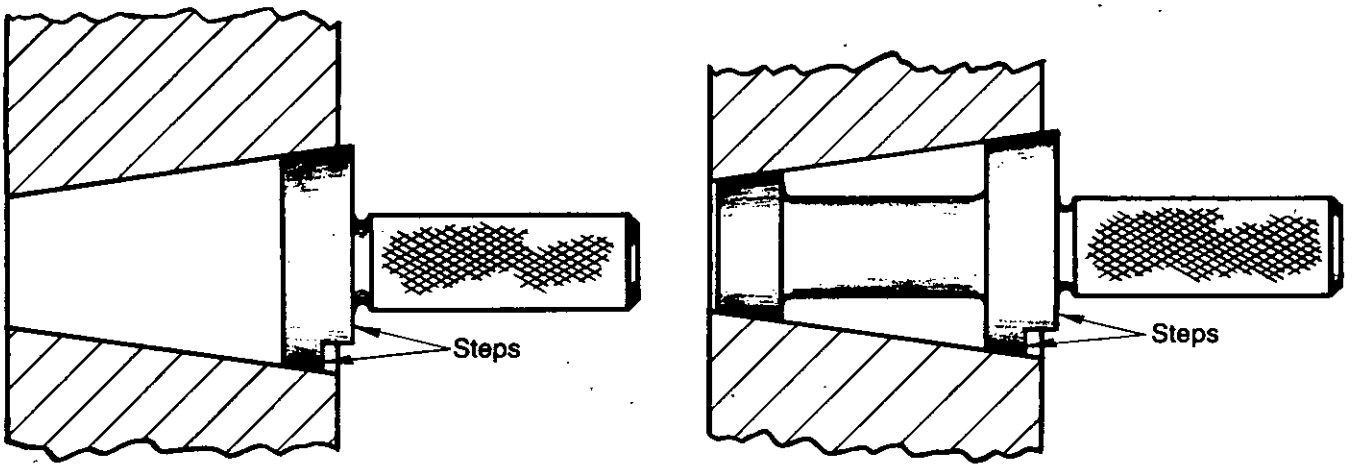

Figure 7-6. Taper Plug Gages

2. *Flat*:

A flat plug gage does not gage the entire feature being inspected in one application. The main use of a flat plug gage is to gage large diameter holes for which a full cylindrical plug gage would be impractical because of its weight. The AGD Standard (Ref. 1) recommends the flat plug gage for internal diameters that range from 1.510 in. to 8.510 in. As shown in Fig. 7-7, the standard design of a flat plug gage is the form of a central axial segment of a plain cylindrical plug gage. Another primary application of the flat plug is as a single-end "Not Go" gage for detecting oversize conditions that include out-of-roundness. When used for this purpose, a handle for the gage may be desired. Ref. 1 includes standardized threads, locking grooves, and the screw sizes necessary to attach handles to the flat plug gage elements. A third application of a flat plug gage is to inspect slots and noncircular holes. Fig. 7-8 shows flat plug gages suitable for this purpose.

Downloaded from http://www.everyspec.com

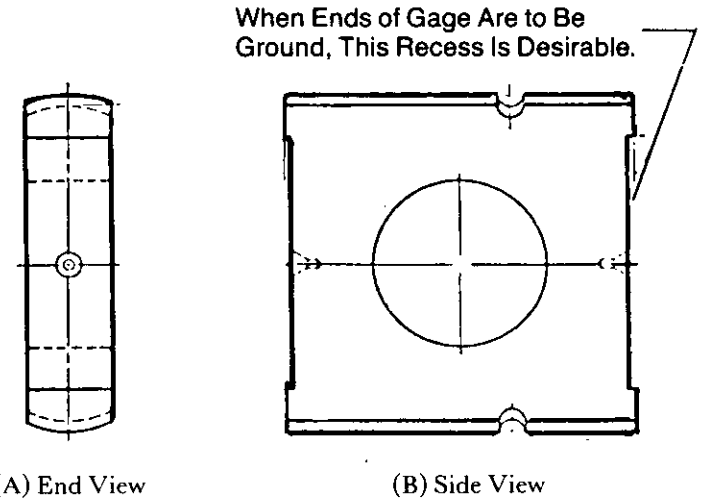

From ANSI B47.1-1981, *Gage Blanks*. Copyright © 1981 by The American Society of Mechanical Engineers, New York, NY.

Figure 7-7. Flat Plug Gage for Internal Diameters

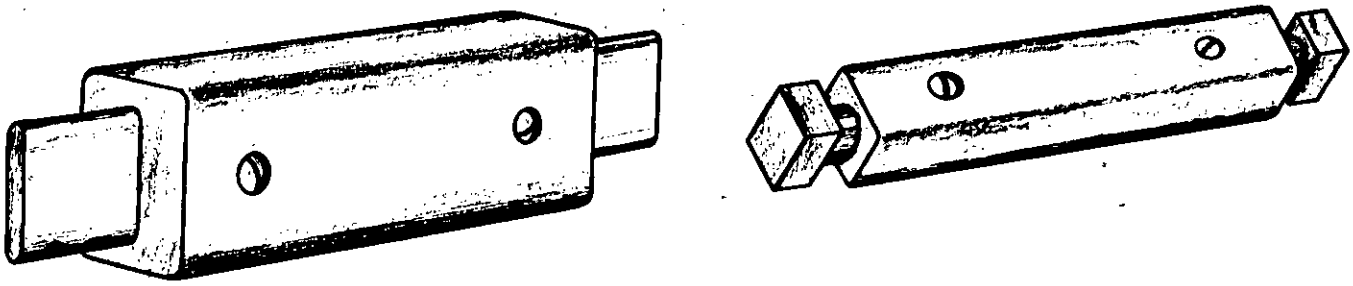

Figure 7-8. Flat Plug Gages for Slots and Noncircular Holes

In addition to the standard plug gage design steps described in par. 7.2.2, the following factors should be considered when designing a flat plug gage:

a. An entering chamfer should be provided where the product specifications permit.

b. Holes may be drilled on the nonfunctional surfaces of large flat plugs to reduce weight.

c. Precision centers used for manufacturing should be left on the gage to facilitate inspection and reconditioning.

d. Depth-checking steps may be included in the design of a flat cylindrical plug gage.

3. *Pilot*. The pilot plug gage is used when the combined effect of hole size and position or when form tolerance is such that a pilot is required to center and start the gage in the hole. For instance, the pilot plug gage may be advantageous when the difference in the product hole diameter and the plug diameter is so small that a plain plug may jam in the hole on insertion. The gage is provided with a pilot that is slightly smaller than the gaging member, and a corresponding hole is provided in the product. The pilot prevents jamming by centering and aligning the plug before entry. The pilot also protects the gage because it minimizes the damage caused by gage entry. Another method of starting a gage in a hole is to use a pilot radius, which serves the same function as a pilot.

4. *Cylindrical Stepped*:

A cylindrical stepped plug gage is a plain plug gage that also has a step ground perpendicular to its axis for use in gaging a depth. The specifications for the cylindrical gaging features are identical to those for a standard plug gage. In addition to the standard plug gage design steps described in par. 7.2.2, the following factors should be considered when designing a cylindrical stepped plug gage:

a. The plug must have a chamfer to clear the radius at the bottom of the hole.

b. The gage configuration must be such that during gaging the step surface on the gage must be

Downloaded from http://www.everyspec.com

immediately adjacent to the product surface and must be accessible by the operator for feel purposes or for sighting with a straightedge.

c. The product tolerance on depth should be 0.005 in. or greater because the accuracy of inspection depends on operator feel.

d. Clearance cuts or slots must be incorporated in the design to clear any obstructions due to product configuration.

e. When the product tolerance exceeds ±1/64 in., the use of scribe lines is acceptable in lieu of a step.

If only one limit of a depth—either maximum or minimum—is gaged, a single step is used. A single step may also be provided on "Not Go" gages used for gaging hidden surfaces to indicate whether the gage has entered up to or beyond the permissible limit. Two steps are employed when the gaging of both limits of a depth is required. If the tolerance on the diameter and depth of the hole are very small and the mating part entering the hole is a close fit, it becomes necessary to use both a stepped plug gage and a depth gage. The single step on the plug is used to insure that the hole is of proper diameter to its minimum depth, whereas the flush pin is used to check only the depth limits of the hole. The tolerance on the single step of the plug must be reversed (minus) to prevent conflict with the flush pin inspection. In this manner, the plug will insure that the diameter of the hole is correct to the proper depth, but it will not actually gage the hole depth. The hole depth will be gaged by the flush pin gage. Flush pin gages are discussed in par. 7.5.

5. *Recessed.* Some situations necessitate the design of a recessed plug gage that contains various types of slots, cutouts, and counterbores, which will clear protrusions located within the product hole being gaged. If possible, this type of plug gage should be adapted from an AGD Standard blank and may be designed either to clear the obstructions or to perform a functional check on the location within the hole of the needed protrusions.

7.2.2 DESIGN OF A PLUG GAGE

Plug gages that use AGD Standard blanks have already been designed, and general dimensional data for diameters ranging from 0.3 to 2.500 in. are listed in the MIL-STD-110, *Gages, Plug, Plain Cylindrical, Go* (Ref. 2), and MIL-STD-111, *Gages, Plug, Plain Cylindrical, Not Go* (Ref. 3). Following is the step-by-step procedure for designing a plug gage; also listed are the criteria necessary to complete each step:

1. *Select Type of Plug Gage*:

The selection criteria include product geometry, the dimension to be inspected, and the performance requirements. Product geometry dictates whether a standard plug gage can be used or whether a special plug gage is required. If a standard plug can be used, the size of the internal diameter to be inspected determines the appropriate AGD Standard design. Performance requirements then mandate the gage construction.

The product geometry selection criteria are given in Table 7-1.

If a standard plug can be used, the choice of an AGD Standard design is based on the dimension to be inspected as given in Table 7-2.

Performance requirements may dictate the choice of gage construction as given in Table 7-3.

TABLE 7-1. PRODUCT GEOMETRY SELECTION CRITERIA

Type of Internal Diameter	Type of Plug Gage
Cylindrical hole	Standard
Segment of a hole	Flat
Tapered hole	Taper
Interrupted diameter	Spline, serration, and screw thread

TABLE 7-2. CHOICE OF STANDARD PLUG GAGE DESIGN

Size Above, in.	Size To and Including, in.	AGD Standard Plug Gage Design
0.010	1.010	Wire type
0.059	1.510	Taperlock
0.760	8.010	Trilock
8.010 and above		Annular

Downloaded from http://www.everyspec.com

TABLE 7-3. TYPES OF GAGE DESIGN OR CONSTRUCTION

Type of Inspection	Plug Gage Design or Construction
For applications requiring accurate centering and starting of the gage in a hole	Pilot design
For depth inspection	Cylindrical stepped design
For inspecting a hole with protrusions	Recessed design
For inspecting one dimension in one pass—either "Go" or "Not Go". Also for setting adjustable instruments or ring gages	Single-ended construction
For inspecting "Go" and "Not Go" dimensions in different passes with the same gage	Double-ended construction
For inspecting "Go" and "Not Go" dimensions in one pass, i.e., for faster inspection	Progressive construction

2. *Select Material of Construction*:

Table 7-4 lists recommended materials for various gage components. Hardened tool steel is recommended for most gaging surfaces, including those of all standard gages. Gage life can be extended through the use of wear tolerances and more resistant materials. For large inspection quantities the materials listed in Table 7-5 are recommended (Ref. 4).

TABLE 7-4. RECOMMENDED GAGE MATERIALS FOR VARIOUS APPLICATIONS

Material	Bases and Frames	Posts, Blocks, etc.	Moving Parts	Gaging Anvils and Surfaces	Miscellaneous
Tool Steel (hardened)	For Small Bases That Have a Gaging Surface	For Small and Medium-Sized Parts That Require Hardening.	For Precision Parts Subject to Wear	Used for Most Gaging Surfaces Requiring Normal Wear Life and on All Standard Gages	Handles Integral With Gaging Members
High-Speed Steel (hardened)		Where Carbide Is Inserted and Brazed, and Post (Block) Must Retain Hardness		Used With Carbide Inserts to Maintain Required Hardness After Brazing	
Drill Rod		Substitute for Tool Steel to Reduce Machining on Round Parts	Small Precision Parts		
Machine Steel	For Medium-Sized Frames and Bases That Require Hardening	For Large Parts That Can Be Left Soft		For Large Gaging Surfaces That Do Not Receive Excessive Wear (Harden)	Handles, Stops, etc.
Cold Finished Steel					Handles, Stops, etc.

(cont'd on next page)

Downloaded from http://www.everyspec.com

TABLE 7-4. (cont'd)

Material	Bases and Frames	Posts, Blocks, etc.	Moving Parts	Gaging Anvils and Surfaces	Miscellaneous
Cast Iron	For Medium and Large Frames or Bases of Intricate Shape		Applicable for Free Moving Parts		
Cast Steel	For Large and Intricate Shapes That Require Hardening	For Intricate Parts That Can Remain Soft (Cast Integral With Base or Frame)	For Parts That Are Too Intricate to Machine and for Which a Precision Hardened Fit Is Required		
Sapphire					For Small Plugs and Rings. Non-sparkling Uses
Magnesium Alloy	For Large Frames That Must be Portable to Aid Inspection				
Aluminum	For Large Frames That Must be Portable to Aid Inspection				Handles
Plastics and Wood					Handles, Braces, and Supports
Music Wire					Springs
Carbide			Used as Inserts on Precision Parts to Increase Wear Life	Inserts for Large Gaging Surfaces Receiving Excessive Wear	
Brass Bronze Copper			Bushings for Rotating Fits		Springs, and Identification Tags

TABLE 7-5. MATERIALS RECOMMENDED FOR LARGE INSPECTION QUANTITIES (Ref. 4)

Inspection Quantity	Gaging Surface Material
Moderate (1000 to 5000 passes)	Alloy steel
High (6000 to 10,000 passes)	Chromium plate
Very high (10,000 to 1,000,000 passes)	Cemented carbide

Downloaded from http://www.everyspec.com

Weight, cost, and material availability also should be considered in selecting gage material. For example, for large plug gages weight is a major factor; therefore, materials lighter than steel should be considered. Another weight-saving technique is to specify composite gage construction that uses lightweight materials for nonfunctioning components. The cost incurred due to special manufacturing needs, however, should be included as a gage material cost component. The use of readily available materials will save time and money. Table 7-4 should not be viewed as all-inclusive and is not intended to discourage the use of other materials in appropriate circumstances.

3. *Select Gage Maker's Tolerances.* Gage maker's tolerances can be obtained from Table 7-6. Use of this table is recommended but not mandatory. Alternatively, tolerances can be derived by using the 10% rule that states that the gage maker's tolerance may be up to 10% of the product tolerance but should never be less than 0.00005 in./in., and to avoid gage manufacturing difficulties, is usually not less than 0.0001 in./in. When no tolerances are indicated for the product dimensions to be inspected, the tolerance on product dimension is 0.01 in. and thus makes the tolerance on gage dimension 0.001 in. It is a good design practice, however, to use no more than 10% of the total product tolerance for combined gage maker and wear tolerances. This generally agrees with Table 7-6 and tables for MIL-STD gages.

4. *Select Wear Allowances.* Based on experience with commonly used materials, standard wear allowances have been estimated and are listed in Table 7-6. Again, use of this table is recommended but not mandatory. Alternatively, up to 5% of product tolerance may be specified as wear allowance. Specially hardened surfaces, e.g., chrome flash, do not require a wear allowance.

5. *Calculate "Go" and "Not Go" Gage Dimensions*:

"Go" dimension = Maximum material condition (MMC) product size + wear allowance

"Go" tolerance = Gage maker's tolerance applied plus

"Not Go" dimension = Least material condition (LMC) product size

"Not Go" tolerance = Gage maker's tolerance applied minus.

Downloaded from http://www.everyspec.com

TABLE 7-6. GAGE MAKER'S TOLERANCES

Size Range (in.)		Component Tolerance	Col. 1	Col. 2	Col. 3
			Wear Allowance	Tolerance	
Above	To and Including			"Go"	"Not Go"
.0	0.825	0.0005		0.00004	0.00004
0.825	1.510			0.00006	No "Not Go" Gage Used
1.510	2.510			0.00008	
2.510	4.510			0.00010	
4.510	6.510			0.00013	
6.510	8.510			0.00015	
8.510	10.510			0.00017	
10.510	up			0.00020	
.0	0.825	0.001	0.00010	0.00005	0.00005
0.825	1.510		0.00010	0.00006	0.00006
1.510	2.510			0.00008	0.00008
2.510	4.510			0.00010	0.00010
4.510	6.510			0.00013	No "Not Go" Gage Used
6.510	8.510			0.00015	
8.510	10.510			0.00017	
10.510	up			0.00020	
.0	4.510	0.002	0.00010	0.00010	0.00010
4.510	6.510			0.00020	0.00013
6.510	8.510			0.00020	0.00016
8.510	up			0.00020	0.00020
.0	0.825	0.003	0.00010	0.00010	0.00010
0.825	4.510		0.00010	0.00020	0.00010
4.510	8.510		0.00010	0.00020	0.00020
8.510	10.510			0.00030	0.00020
10.510	up			0.00030	0.00030
.0	2.510	0.004	0.00020	0.00020	0.00010
2.510	4.510		0.00020	0.00020	0.00020
4.510	8.510		0.00020	0.00030	0.00020
8.510	12.510		0.00010	0.00040	0.00020
12.510	up		0.00010	0.00050	0.00020
.0	2.510	0.005	0.00030	0.00020	0.00010
2.510	4.510		0.00020	0.00020	0.00020
4.510	8.510		0.00020	0.00030	0.00020
8.510	10.510		0.00020	0.00040	0.00020
10.510	up		0.00010	0.00050	0.00030
.0	2.510	0.006	0.00030	0.00020	0.00010
2.510	4.510		0.00030	0.00020	0.00020
4.510	6.510		0.00020	0.00030	0.00020
6.510	8.510		0.00020	0.00030	0.00030
8.510	10.510		0.00020	0.00040	0.00030
10.510	12.510		0.00020	0.00050	0.00040
12.510	up		0.00010	0.00060	0.00040
.0	1.510	0.007	0.00040	0.00020	0.00010
1.510	2.510		0.00030	0.00020	0.00020
2.510	4.510		0.00030	0.00030	0.00020
4.510	6.510		0.00030	0.00030	0.00030
6.510	8.510		0.00030	0.00040	0.00030
8.510	10.510		0.00020	0.00050	0.00030
10.510	12.510		0.00020	0.00060	0.00040
12.510	14.510		0.00020	0.00070	0.00040
14.510	up		0.00010	0.00080	0.00050

Size Range (in.)		Component Tolerance	Col. 1	Col. 2	Col. 3
			Wear Allowance	Tolerance	
Above	To and Including			"Go"	"Not-Go"
.0	1.510	0.008	0.00040	0.00020	0.00010
1.510	2.510		0.00040	0.00020	0.00020
2.510	4.510		0.00030	0.00030	0.00030
4.510	6.510		0.00030	0.00040	0.00030
6.510	8.510		0.00030	0.00040	0.00040
8.510	10.510		0.00030	0.00050	0.00040
10.510	12.510		0.00020	0.00060	0.00050
12.510	14.510		0.00020	0.00070	0.00050
14.510	up		0.00020	0.00080	0.00060
.0	0.825	0.009	0.00040	0.00020	0.00010
0.825	1.510		0.00040	0.00030	0.00010
1.510	2.510		0.00040	0.00030	0.00020
2.510	6.510		0.00040	0.00040	0.00030
6.510	8.510		0.00040	0.00050	0.00040
8.510	10.510		0.00030	0.00060	0.00040
10.510	12.510		0.00030	0.00070	0.00050
12.510	14.510		0.00030	0.00080	0.00050
14.510	up		0.00030	0.00090	0.00060
.0	0.825	0.010	0.00040	0.00030	0.00010
0.825	1.510		0.00040	0.00030	0.00020
1.510	4.510		0.00040	0.00040	0.00030
4.510	6.510		0.00040	0.00050	0.00040
6.510	8.510		0.00040	0.00060	0.00040
8.510	10.510		0.00040	0.00070	0.00050
10.510	12.510		0.00040	0.00080	0.00050
12.510	14.510		0.00030	0.00090	0.00060
14.510	up		0.00030	0.00100	0.00060
.0	1.510	0.012	0.00040	0.00060	0.00020
1.510	4.510		0.00040	0.00070	0.00030
4.510	8.510		0.00040	0.00080	0.00040
8.510	12.510		0.00040	0.00090	0.00050
12.510	up		0.00030	0.00100	0.00060
.0	1.510	0.014	0.00040	0.00060	0.00020
1.510	4.510		0.00040	0.00080	0.00030
4.510	8.510		0.00040	0.00100	0.00040
8.510	12.510		0.00040	0.00120	0.00050
12.510	up		0.00040	0.00140	0.00060
.0	2.510	0.016	0.00040	0.00080	0.00020
2.510	6.510		0.00040	0.00100	0.00040
6.510	12.510		0.00040	0.00120	0.00060
12.510	up		0.00040	0.00140	0.00080
.0	4.510	0.020	0.00040	0.00100	0.00040
4.510	6.510		0.00040	0.00100	0.00060
6.510	12.510		0.00040	0.00150	0.00080
12.510	up		0.00040	0.00200	0.00100
.0	4.510	0.025 up	0.00040	0.00100	0.00080
4.510	6.510		0.00040	0.00100	0.00100
6.510	12.510		0.00040	0.00150	0.00150
12.510	up		0.00040	0.00200	0.00200

For size range or tolerance not shown, use next smaller size tolerance. For flush pin and adjustable gages, Column 2 is applicable for both maximum and minimum tolerancees.

NOTES:
Wear allowance is not provided on the following:
1. Taper plug, and rings gages with included angles greater than 15 deg
2. Adjustable snap gages
3. Flush pin gages
4. Gages for lengths and depths.

Downloaded from http://www.everyspec.com

6. *Specify Length Requirements, Chamfers and Corner Radii, and Shoulders or Scribelines*:

The plug gage element must be equal to or longer than the depth of the internal diameter being gaged. When it is necessary to control the internal diameter to a certain depth, a minimum depth step or scribeline should be provided on the "Go" plug gage. To facilitate gage entry into blind holes, an air groove or a flat should be provided. To facilitate manufacture, all plug gages less than 0.25 in. should have a flat, not a groove. Flat and groove dimensions are given in Table 7-7 (Ref. 5).

For extremely shallow counterbores the plug edge should be left sharp. If the "Go" plug gage is provided with steps for depth gaging, then to avoid contact between the gage and the fillet, a chamfer should be provided on the "Go" element end. Also this chamfer should be larger than the maximum allowable fillet at the bottom of the cavity.

7. *Specify Surface Finish and Hardness.* Surface finish values for all gage surfaces should be selected from Tables 7-8 and 7-9 and hardness values from Table 7-10.

TABLE 7-7. FLAT AND GROOVE DIMENSIONS (Ref. 5)

Plug Diameter, in.	Flat Depth, in.
Up to 0.6	0.005 ± 0.001
0.06 to 0.10	0.010 ± 0.002
0.10 to 0.15	0.012 ± 0.005
0.15 to 0.25	0.015 ± 0.010

Plug Diameter, in.	Air Groove Size, in. [width (in.) × depth (in.)]
0.25 to 0.625	0.03 ± 0.01 × 0.03 ± 0.01
0.626 to 1.00	0.04 ± 0.01 × 0.04 ± 0.01
1.001 and larger	0.06 ± 0.01 × 0.06 ± 0.01

"Go" and "Not Go" plug gages should be chamfered as follows:

Plug Diameter, in.	Chamfer, in. × deg
0.030 to 0.075	0.008 ± 0.005 × 30
0.075 to 0.281	0.015 ± 0.005 × 30
0.281 to 0.510	0.030 ± 0.005 × 30
0.510 to 1.510	0.030 ± 0.005 × 30
1.510 to 2.010	0.050 ± 0.005 × 30

TABLE 7-8. RECOMMENDED SURFACE FINISH VALUES FOR GAGING ELEMENTS

Size Range		Apply $\sqrt[4]{}$—i.e. 4-μin. Surface Finish—to All Gaging Tolerances Lying Between These Values	
Above	To and Including		
0.029	0.825	0.00003	0.00009
0.825	1.510	0.00004	0.00011
1.510	2.510	0.00006	0.00014
2.510	4.510	0.00007	0.00017
4.510	6.510	0.00009	0.00022
6.510	9.010	0.00012	0.00028
9.010	12.010	0.00015	0.00035

Apply $\sqrt[2]{}$—i.e., 2-μin. surface finish—to gaging tolerances below these values

Apply $\sqrt[8]{}$—i.e., 8-μin. surface finish—to gaging tolerances above these values

For component tolerance and/or size range *not* shown, use next smaller component tolerance.

Downloaded from http://www.everyspec.com

TABLE 7-9. RECOMMENDED SURFACE FINISH VALUES FOR NONGAGING SURFACES

GENERAL:

1. The numerical values specified in these tables represent the maximum allowable roughness on the designated surface.
2. Requirements for natural finishes—castings forgings, etc.—should not be specified on drawings.

Recommended Values							
	Surface Finish Values, μin.						
Types of Fits, Surfaces, etc.	4 √	8 √	16 √	32 √	63 √	125 √	250 √
Critical Slide and Bearing Fits	×						
Less Critical Slide Fits (Flush Pins)*		×					
Feeler or Sighting Surfaces			×				
Precision-Located Snug, Push, Drive, or Press Fits*			×				
Reference Surfaces for Measuring Purposes			×				
Free or Running Fits				×			
Nonprecision-Located Snug, Push, Drive, or Press Fits*				×	×		
Overall Cleanup Finishes (Hand Gages)					×		
Overall Cleanup Finishes (Bases or Other Unimportant Machined Surfaces)						×	×

*The class fit should be considered when specifying the required finish. Deviations from the recommended values are permitted if justified.

TABLE 7-10. RECOMMENDED HARDNESS VALUES FOR COMMONLY USED GAGE MATERIALS

Type of Steel	Thickness, in.	Rockwell Hardness or Equivalent	Remarks
Tool Steel	Up to 0.0625	C50 to C55	The hardness should be based on the thinnest section of the gage.
Tool Steel	0.0625 to and including 0.125	C55 to C60	
Tool Steel	Above 0.125	C60 minimum	
Threads and Serrated Gages (Tool Steel)	—	C60 minimum	—
Spring Steel	—	C45 to C55	Intermediate range permissible within C45 to C55
Machine Steel (Low Carbon—Hot Rolled)	—	15N 90 minimum	Case or pack harden 0.02 in. minimum depth after grinding

8. *Select Standard Blank Size and Specify Other Gage Hardware.* Refer to the AGD Standard (Ref. 1) for standard sizes of gage blanks and other hardware such as handles, screws, etc. If non-AGD Standard handles are specified, the hardware must be selected to suit the requirement. Knurling may be specified for the handle to facilitate gripping.

9. *Prepare Gage Drawings and/or Specifications.* If the designed gage is not available commercially, gage drawings should be prepared according to Department of Defense Standard (DOD-STD)-100, *Engineering Drawing Practices* (Ref. 6); DOD-D-1000, *Drawings, Engineering and Associate Lists* (Ref. 7); ANSI Y14.5M, *Dimensioning and Tolerancing* (Ref. 8); and MIL-G-10944, *Gages, Dimensional Control* (Ref. 9). If the gage is commercially available, the details of the gage should be included in the gage specification.

Downloaded from http://www.everyspec.com

7.2.3 EXAMPLE OF PLUG GAGE DESIGN

An example of a plug gage design using the step-by-step procedure of par. 7.2.2 follows.

7.2.3.1 Requirement

Design a plug gage to inspect a product with the following configuration:

Through Hole Diameter = 3.000 + 0.006 in.
Thickness = 0.45 in. max.

7.2.3.2 Solution

The solution follows:

1. *Select Type of Plug Gage*:

Product Characteristic	Gage
Cylindrical hole	Standard plug gage
3.000 in. diameter	Trilock design.

2. *Select Material of Construction.* (from Table 7-4) Tool steel.
3. *Select Gage Maker's Tolerances*: (from Table 7-6)

	Tolerance	
Product	"Go" Gage	"Not Go" Gage
3.000 in. diameter and 0.006 in. tolerance	0.0002 in.	0.0002 in.

4. *Select Wear Allowance*: (from Table 7-6)

Product	Wear Allowance
3.000 in. diameter and 0.006 in. tolerance	0.0003 in.

5. *Calculate "Go" and "Not Go" Dimensions*:

"Go" dimension = MMC size of hole + wear allowance
= 3.000 + 0.0003 = 3.0003 in.
"Go" tolerance = Gage maker's tolerance applied plus
= + 0.0002 in.
Wear Limit = 3.0000 in.
"Not Go" dimension = LMC size of hole
= 3.0060 in.
"Not Go" tolerance = Gage maker's tolerance applied minus
= −0.0002 in.

6. *Specify Length Requirements, Chamfers, Corner Radii, and Shoulders and Scribelines*:

Length of "Go" plug		>Length of hole
		> 0.45 in.
		≈ 0.50 in.
Chamfer on "Go" plug	=	0.050 ± 0.005 in. × 30 deg
Chamfer on "Not Go" plug	=	0.050 ± 0.005 in. × 30 deg

7. *Specify Surface Finish and Hardness*: (from Tables 7-8 and 7-10)

	Surface Finish	Hardness
Plug Gage Surfaces	8 μin.	C60 min

8. *Select Standard Blank Size and Specify Other Gage Hardware*: (from Table 9, Ref. 1)

Standard blank sizes for "Go" and "Not Go" plug gaging members suitable for Handle No. 7 and the size range of 3.000 to 3.006 in. are listed in Table 14, Line 1, of Ref. 1.

Plug Gage Diameter	Recommended Hardware
3.000 in.	Double-Ended Handle No. 7 with Screw No. 2

Downloaded from http://www.everyspec.com

9. *Prepare Gage Drawing and/or Specifications*:

Because this is a commercially available AGD Standard gage, specification of the gage is sufficient for its procurement. The gage specification should include the following:

Double-ended handle size number	7
"Go" dimension and tolerance	3.0003 + 0.0002 in.
"Not Go" dimension and tolerance	3.0060 − 0.0002 in.
Length of "Go" member	0.5 in.

The product and plug gage tolerance relationship for this example is shown in Fig. 7-9. Although not required for procurement, the gage drawing is shown in Fig. 7-10.

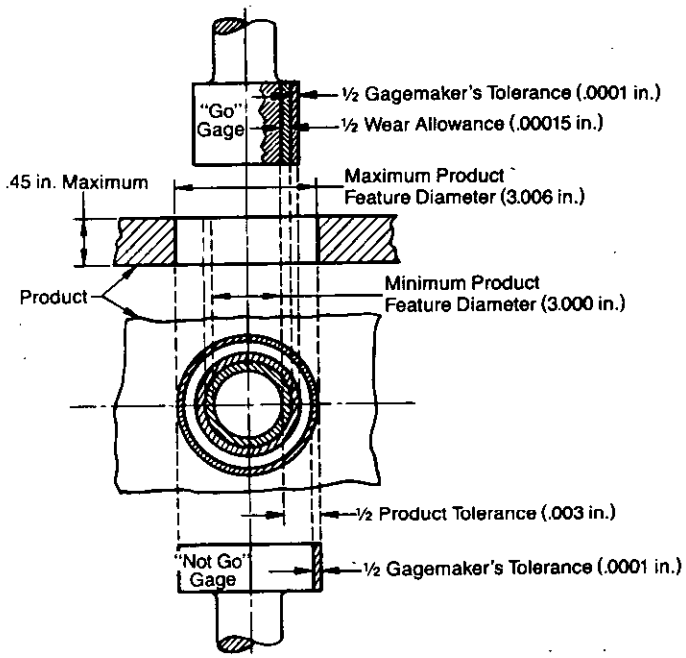

Figure 7-9. Product and Plug Gage Tolerance Relationship

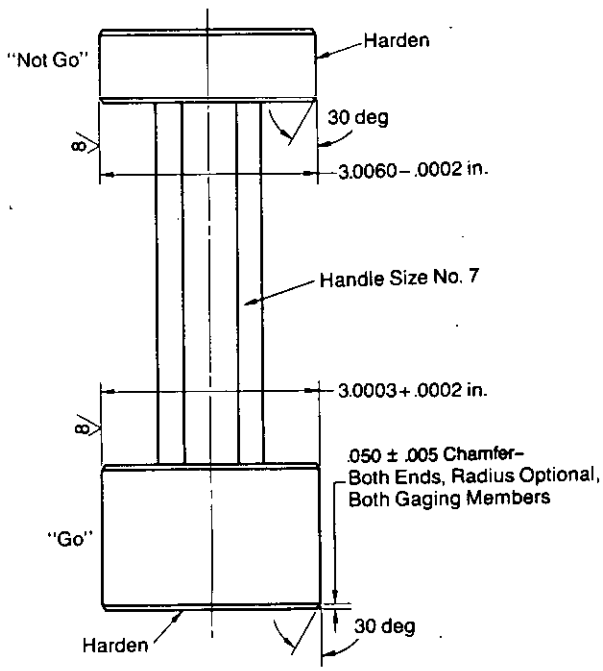

Figure 7-10. Plug Gage Design Example

Downloaded from http://www.everyspec.com

7.3 RING GAGES

A plain ring gage is a circular ring employed for external diameter size control. The advantage of a "Go" ring gage is that it simulates the mating part. However, because out-of-roundness or excessive taper cannot be detected if the largest product diameter is within the tolerance limits, ring gages are not considered good "Not Go" gages. Another disadvantage of ring gages is that the product must be taken off the machine and deburred before inspection.

7.3.1 TYPES

A ring gage is categorized as either standard or special. The AGD Standard (Ref. 1) designates four designs of standard ring gages based on their construction and use: (1) the solid ring gage with bushings, (2) solid, one-piece ring gage, (3) flanged ring gage, and (4) flanged ring gage with handles. These four standard ring gages are shown in Fig. 7-11. There are also several designs of special ring gages based on product size and geometry. The most common special ring gages include the twin, taper, stepped, spline, and thread ring gages. Spline and thread ring gages are used to inspect interrupted diameters and are discussed in Chapter 8. For all ring gages an annular groove cut in the outer knurled surface of the "Not Go" gage distinguishes it from the "Go" gage.

7.3.1.1 Standard Ring Gages

A ring gage is the best "Go" gage because it usually controls maximum envelope size and, therefore, guarantees assembly. The AGD Standard (Ref. 1) includes the following ring gage types:

1. *Solid Ring Gage With Bushings.* The solid ring gage with bushings is constructed by press fitting a hardened bushing (usually steel) into a soft metal (usually mild steel) plate. The use of a soft metal for the gage body reduces costs and facilitates manufacture of this gage. This type of ring gage is used for relatively small external diameters, i.e., from 0.010 in. to and including 0.510 in.

2. *Solid, One-Piece Ring Gage.* The solid, one-piece ring gage is made of a single cylindrical piece of hardened metal (usually steel). This design is standard for gaging all external diameters from 0.510 in. up to and including 1.510 in. Use of the solid, one-piece ring gage is optional in the range 0.010 in. to 0.510 in.

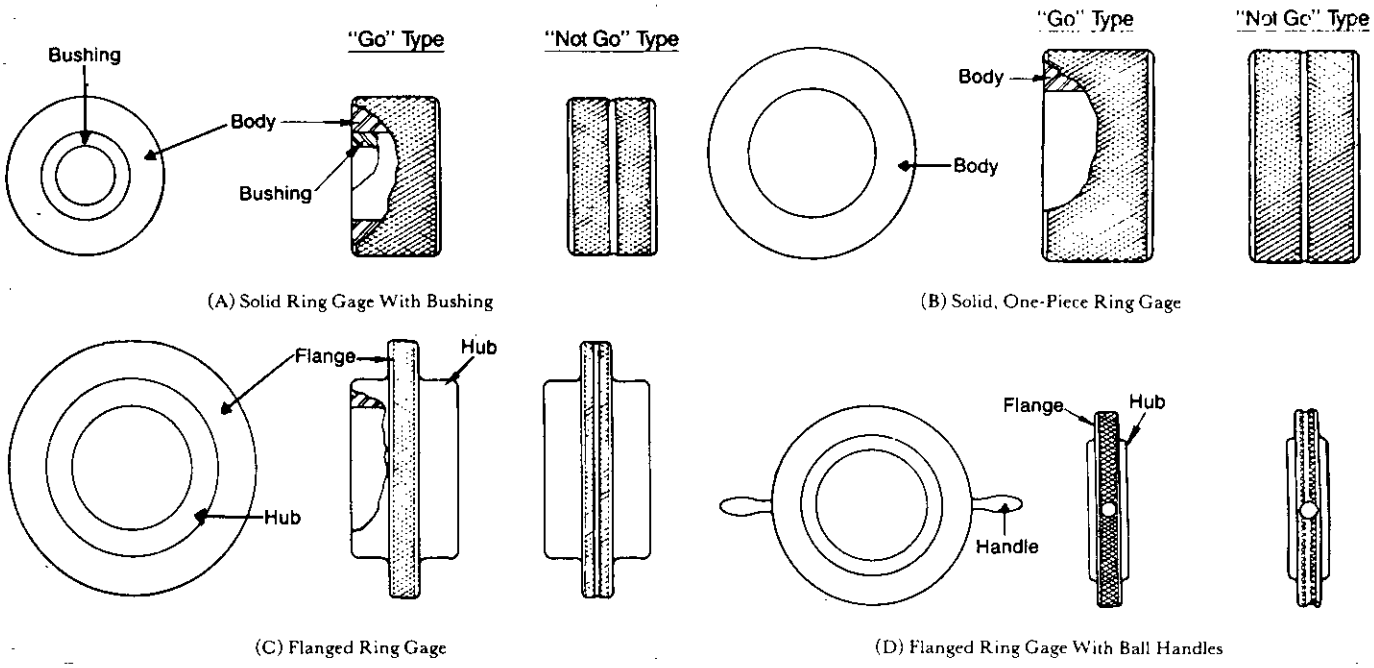

From ANSI B47.1-1981, *Gage Blanks.* Copyright © 1981 by The American Society of Mechanical Engineers, New York, NY.

Figure 7-11. Ring Gages

Downloaded from http://www.everyspec.com

3. *Flanged Ring Gage.* The flanged ring gage is made in the form of a solid ring with a flange on the periphery. This construction is recommended for gaging external diameters above 1.510 in. up to and including 5.510 in. because a solid ring gage would be very heavy.

4. *Flanged Ring Gage With Ball Handles.* The flanged ring gage with ball handles is a flanged gage with two ball handles mounted on the periphery. The gage blanks have two tapped holes 180 deg apart to accommodate the ball handles. The flanged construction reduces unnecessary weight, and the ball handles facilitate handling. This design is recommended for dimensions greater than 5.510 in. up to and including 12.260 in.

7.3.1.2 Special Ring Gages

A discussion of special ring gages follows:

1. *Twin.* The twin ring gage is used mostly for small dimensions. The "Go" and "Not Go" elements are built into a single frame. This construction facilitates inspection of small products by saving the time usually spent looking for and handling two separate gages. The "Go" and "Not Go" gaging elements are made distinguishable by placing the "Not Go" ring next to the chamfered end of the frame.

2. *Taper.* Taper ring gages are employed to gage the taper on shafts. The principle of operation of taper ring gages is the same as that for taper plug gages (See par. 7.2.1.2.), and two taper ring gages are required for a complete inspection of a tapered shaft. Fig. 7-12 shows a pair of taper ring gages. If the end of the product lies within the step, the taper is within limits. If the end of the shaft lies beyond the step, the taper is too small, and if it does not reach the step, the taper is too large.

3. *Stepped.* A stepped ring gage, shown in Fig. 7-13, is a plain ring that has a step ground perpendicular to its axis for use in gaging the length to an adjacent shoulder. In addition to the ring gage design steps presented in par. 7.3.2, the following factors should be considered when designing a stepped ring gage:

a. The ring should have a chamfer to clear the fillet on the product.

b. The step surface on the gage should be immediately adjacent to the product surface and accessible for the purpose of operator feel or for use with a straightedge.

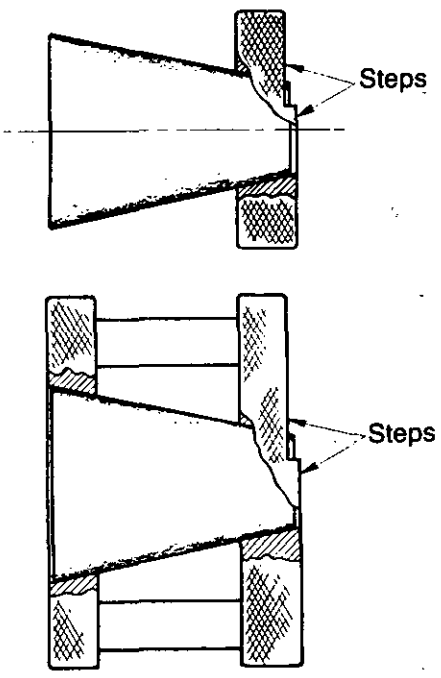

Figure 7-12. Taper Ring Gages

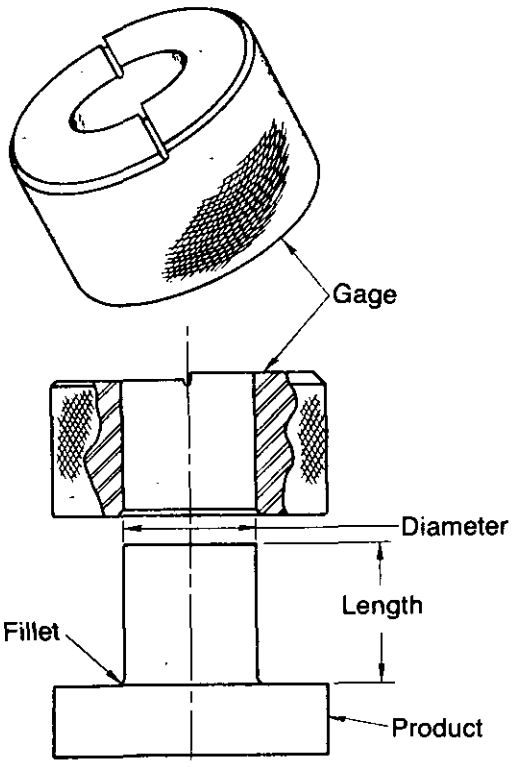

Figure 7-13. Stepped Ring Gage

Downloaded from http://www.everyspec.com

c. The product tolerance should be no less than 0.005 in. because the accuracy of inspection depends on operator feel.

d. Clearance cuts or slots should be incorporated in the design to clear any obstructions.

7.3.2 DESIGN OF A RING GAGE

Ring gages that use AGD Standard blanks have already been designed for most applications and are listed in MIL-STD-112, *Gages, Ring, Plain, Go*, (Ref. 10), and MIL-STD-113, *Gages, Ring, Plain, Not Go*, (Ref. 11).

The paragraphs that follow provide a step-by-step procedure for designing a ring gage. Also listed are the criteria necessary to complete each step. Although this design procedure includes "Not Go" ring gages, the reader is reminded—see par. 7.4—that snap gages are preferred for "Not Go" inspections.

1. *Select Type of Ring Gage.* The selection criteria include the dimension to be inspected and the performance requirement. If a standard ring gage can be used, the choice of the AGD Standard design is based on the dimension to be gaged as given in Table 7-11. Performance requirements may dictate the choice of a special ring gage, as indicated by Table 7-12.

2. *Select Material of Construction.* The selection of construction material for ring gages, with one exception, is made in the same manner as that for plug gages listed in Step 2 of par. 7.2.2. Sometimes a soft metal—usually mild steel—is used for the body of the ring gage to facilitate manufacture and a hardened bushing is used to provide the gaging surface.

3. *Select Gage Maker's Tolerances.* Gage maker's tolerances can be obtained from Table 7-6. Use of this table is recommended but is not mandatory. Alternatively, these tolerances can be derived by using the 10% rule, i.e., the gage maker's tolerance is 10% of the product tolerance. The gage maker's tolerance should never be less than 0.00005 in./in. and to avoid gage manufacturing difficulties, is usually not less than 0.0001 in./in. When no tolerances are indicated for the product dimensions to be inspected, the inspection equipment tolerance should be based on the lesser of the sum of tolerances on product dimensions making up the overall gaged dimension or 0.01 in. and thus makes the overall gage tolerance dimension 0.001 in.

4. *Select Wear Allowances.* Based on experience with commonly used materials, standard wear allowances have been estimated and are listed in Table 7-6. Use of this table is recommended but is not mandatory. Alternatively, 5% of product tolerance can be specified as wear allowance.

TABLE 7-11. RING GAGE SELECTION BASED ON SIZE

Size Range, in.		AGD Standard Ring Gage Design
From	To and Including	
0.010	0.510	Solid, one-piece with bushing (solid one-piece optional)
0.510	1.510	Solid, one-piece
1.510	5.510	Flanged
5.510	12.260	Flanged with ball handles

TABLE 7-12. RING GAGE SELECTION BASED ON PERFORMANCE REQUIREMENTS

Performance Requirements	Ring Gage Design
Tapered Shaft	Taper
Small Shaft Requiring Rapid Inspection	Twin
Gage the Length as Well as Diameter	Stepped
Thread Inspection	Thread
Spline Inspection	Spline

Downloaded from http://www.everyspec.com

5. *Calculate "Go" and "Not Go" Dimensions*

"Go" dimension = MMC dimension of shaft − wear allowance
"Go" tolerance = Gage maker's tolerance applied minus
"Not Go" dimension = LMC dimension of shaft
"Not Go" tolerance = Gage maker's tolerance applied plus.

6. *Specify Length (Thickness) Requirements, Shoulders, Corner Radii, and Chamfers.* If a nonstandard ring gage is used, the length (thickness) of the gage should suit the feature length requirements of the product. Internal shoulders may be specified to limit the length to which the feature should be gaged, and a step may be specified to gage feature diameter and length simultaneously. Corner radii should be provided to clear fillets on the product, and unnecessary sharp edges should be eliminated by providing corner radii and chamfers for safety.

7. *Specify Surface Finish, Hardness, and Knurling.* Surface finish values for all gage surfaces should be selected from Tables 7-8 and 7-9 and hardness values from Table 7-10. If a nonstandard gage is used, knurling may be specified on the external surface.

8. *Select Standard Blank Size for Ring.* Refer to AGD Standard (Ref. 1) for standard ring gage blank sizes.

9. *Prepare Gage Drawings and/or Specifications.* If a nonstandard gage is selected, prepare gage drawings in accordance with Refs. 6, 7, 8, and 9. If an AGD Standard gage is used, prepare gage specifications.

7.3.3 EXAMPLE OF RING GAGE DESIGN

An example of a ring gage design using the step-by-step procedure of par. 7.3.2 follows.

7.3.3.1 Requirement

Design a ring gage to inspect a product with the configuration that follows

Product Configuration:

$$\text{External diameter (shaft)} = 2.000 \begin{smallmatrix} +0.000 \\ -0.004 \end{smallmatrix} \text{ in.}$$

$$\text{Length} = 3.0 \text{ in. max.}$$

7.3.3.2 Solution

The solution follows:

1. *Select Type of Ring Gage*: (from Table 7-11)

Product Characteristics	Gage
2.000-in. diameter	Flanged design.

2. *Select Material of Construction.* (from Table 7-4) Tool steel.

3. *Select Gage Maker's Tolerances*: (from Table 7-6)

Product	Tolerance "Go" Gage	Tolerance "Not Go" Gage
2.000-in. diameter and 0.004-in. size tolerance	0.0002 in.	0.0001 in.

4. *Select Wear Allowance*: (from Table 7-6)

Product	Wear Allowance
2.000-in. diameter and 0.004-in. size tolerance	0.0002 in.

5. *Calculate "Go" and "Not Go" Dimensions*:

"Go" dimension = MMC dimension of shaft − wear allowance
= 2.0000 − 0.0002 = 1.9998 in.
"Go" tolerance = Gage maker's tolerance applied plus
= − 0.0002 in.
Wear Limit = 2.0000 in.
"Not Go" dimension = LMC dimension of shaft
= 1.996 in.
"Not Go" tolerance = Gage maker's tolerance applied plus
= +0.0001 in.

Downloaded from http://www.everyspec.com

6. *Specify Length (Thickness) Requirements, Shoulders, Corner Radii, and Chamfers*: (from Table 30, Ref. 1)

The shaft is 3.0 in. long, and the ring gage can be slid along its length. Therefore, a standard ring gage thickness can be used.

Product Feature	Ring Gage Thickness
2.000-in. diameter and 3.0 in. long (from Table 30, Ref. 1)	1.5 in.

Other dimensions for this gage are also listed in this table.

7. *Specify Surface Finish and Hardness*: (from Tables 7-8 and 7-10)

	Surface Finish	Hardness
Internal Ring Surface	8 μin.	C60 min (Rockwell)

The external surface of the ring is knurled.

8. *Select Standard Blank Sizes*: (from Table 30, Ref. 1)

Product Feature	Gage Blank
2.000-in. diameter	Ring Size No. 6.

The general dimensions of the blanks are listed in this table. For "Not Go" ring gages the same size blank with an annular groove on the external surface is chosen.

9. *Prepare Gage Drawings and/or Gage Specifications*:

Because this is a commercially available AGD Standard gage, specification of the gage is sufficient for its procurement. The gage specification should include the following:

Ring gage Size No.	6
"Go" dimension and tolerance	1.9998 − 0.0002 in.
"Not Go" dimension and tolerance	1.9960 + 0.0001 in.

The relationship between product and ring gage tolerances is illustrated in Fig. 7-14. Although it is not required for procurement, the gage drawing is shown in Fig. 7-15.

7.4 SNAP GAGES

A snap gage is a caliper-type gage used for controlling external dimensions such as outside diameters, lengths, and thicknesses. It is characterized by a "C"-shaped construction, and the gaging elements are located opposite each other. Snap gages are not practical for large dimensions (greater than 12 in.) or small tolerances (less than 0.005 in.) A snap gage is an excellent "Not Go" gage because it can positively detect ovality even below the product minimum limit. The use of a less preferred design should be based only on a full analysis that shows the choice to be "best" in a special case. The snap gage contacts a product at two points. If the product has an oval cross section instead of a circular one, it will have a long and a short axis. If the short axis is below the product minimum limit and if properly oriented, the product will "Go" into the "Not Go" snap gage and will be rejected. To find this orientation, the snap gage should be applied at different product orientations. A snap gage is an adequate "Go" gage for most purposes; however, a ring gage is preferred when a close fit is essential.

7.4.1 TYPES

A snap gage is classified as one of four types—fixed, plain adjustable, built-up, and special. Fixed and built-up snap gages can be further categorized as single-ended, double-ended, or progressive. The AGD Standard (Ref. 1) includes standard designs for plain adjustable snap gages and double-ended, built-up snap gages. Special snap gages are required when either product geometry or gaging requirements preclude the use of standard snap gages. The most common special snap gages are screw thread snap gages, extended frame snap gages, snap gages with handles, and snap gages with insulated grips. Screw thread snap gages are discussed in Chapter 8. Typically for all types of snap gages except screw thread snap gages, a "Go" gage is identified by a radius on the leading edge of the gaging elements, whereas a "Not Go" gage is identified by a chamfer.

Downloaded from http://www.everyspec.com

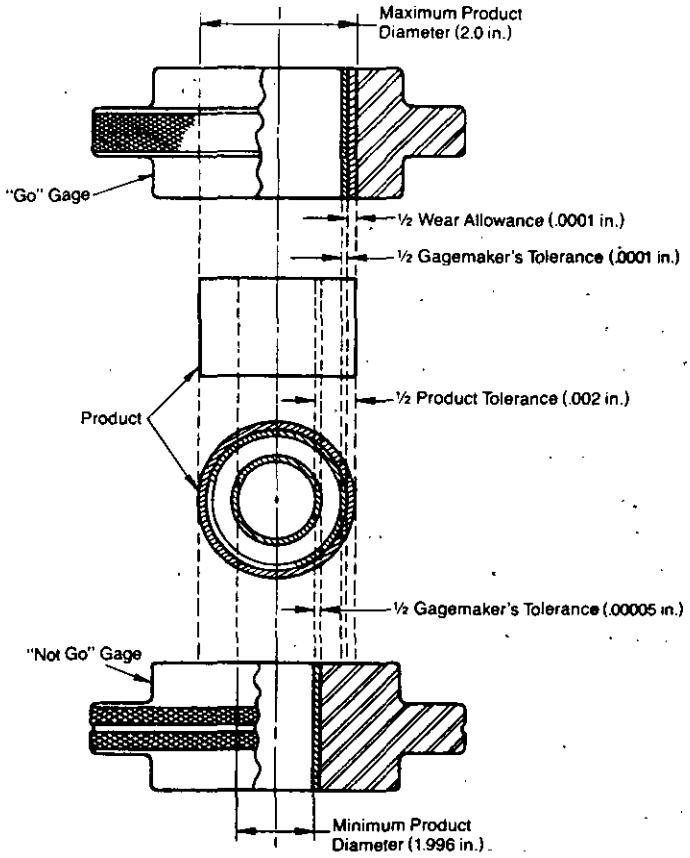

Figure 7-14. Product and Ring Gage Tolerance Relationship

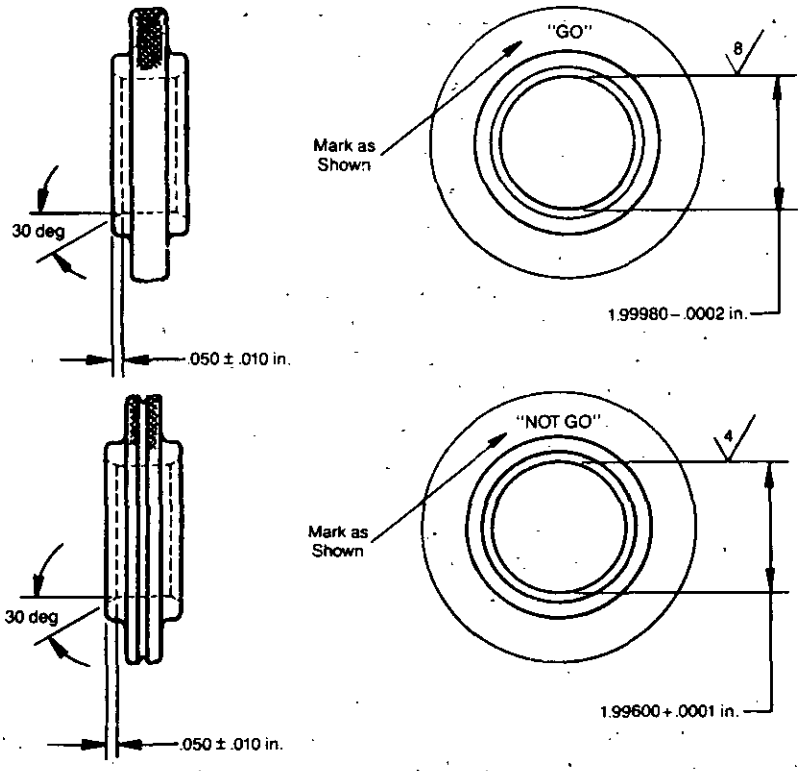

Figure 7-15. Ring Gage Design Example

Downloaded from http://www.everyspec.com

7.4.1.1 Fixed (Nonadjustable) Snap Gages

A discussion of fixed snap gages follows:

1. *Single-Ended.* As the name indicates, the single-ended, fixed snap gage consists of a single gaging member of one-piece construction.

2. *Double-Ended.* The double-ended, fixed snap gage has the "Go" and "Not Go" gaging members on opposite ends of the same gage. Because the "Go" and "Not Go" members are mounted on the same gage, it is more convenient to use than two single-ended, fixed snap gages. For large dimensions, however, a double-ended snap gage can be large and unwieldy.

3. *Progressive.* The progressive fixed snap gage has the "Go" and "Not Go" gaging elements in succession on the same end of the gage. This is a convenient and efficient arrangement because a single pass of the gage is sufficient to check whether the part is within the specified limits. It is, however, the most expensive of the fixed snap gages to manufacture because of its relatively complicated construction.

7.4.1.2 Plain Adjustable Snap Gages

Plain adjustable snap gages are characterized by adjustable and replaceable gaging members that are set and sealed in the metrology laboratory. Because the gaging members are replaceable, these gages are easier to renovate than one-piece gages. Plain adjustable snap gages are progressive in that they have the "Go and "Not Go" gaging members in succession on the same end of the gage; therefore, only a single pass is required to inspect the product feature. In addition, these gages are more adaptable and economical than the progressive fixed gages. Plain adjustable snap gages are useful for gaging external diameters, lengths, and thicknesses with tolerances 0.003 in. or greater.

Plain adjustable snap gages are categorized as Models A, B, C, MC, and E in the AGD Standard (Ref. 1). Fig. 7-16 shows the construction details of these gages. Models A, B, C, and MC have the conventional "C" shape, whereas Model E has a "C" shape with an extended base. Each frame is made of cast iron and has a solid web. The frames of Models A, B, and C have been selected so that the same molding pattern can be used for the casting frames for all three models. The Model MC frame is a miniature version of the frame for Models A, B, and C.

The gaging ranges of plain adjustable snap gages are as follows:

1. Model A from 0 to 12 in. inclusive
2. Model B from ½ to 11 ¼ in. inclusive
3. Model C from 0 to 11 ⅝ in. inclusive
4. Model MC from 0 to 0.760 in. inclusive
5. Model E from 0 to 5 11/16 in. inclusive.

The gaging members of the plain adjustable snap gages can be pins, buttons, or anvils. Model A employs four circular gaging pins, Model B employs four gaging buttons, Models C and MC employ two gaging buttons and a single-block anvil, and Model E employs two gaging buttons and an extended single-block anvil. The gaging buttons or pins are chamfered or beveled at the forward edge to facilitate product entry. The distance between the "Go" and "Not Go" gaging members is kept to a minimum. The device for locking the gaging pins or buttons in position has also been standardized.

The AGD Standard designs offer the following advantages:

1. The frames are very rigid.
2. Weight is minimized.
3. Nice balance and feel are achieved by proper material distribution.
4. The locking device has been tested for effectiveness.
5. Gaging pins, buttons, and anvils are constructed so that the gages are rigid and can retain their accuracy.
6. Adjustment is easy and simple.
7. Limits and tolerances are carefully selected to preserve accuracy and permit interchangeability.

Model C is the most commonly used because it has a solid bottom anvil that provides greater bearing area than the pins and buttons in Models A and B, which are seldom used. Model MC is used for measuring miniature parts. Model E is used in applications for which it is desirable to have a part of the product bearing

Downloaded from http://www.everyspec.com

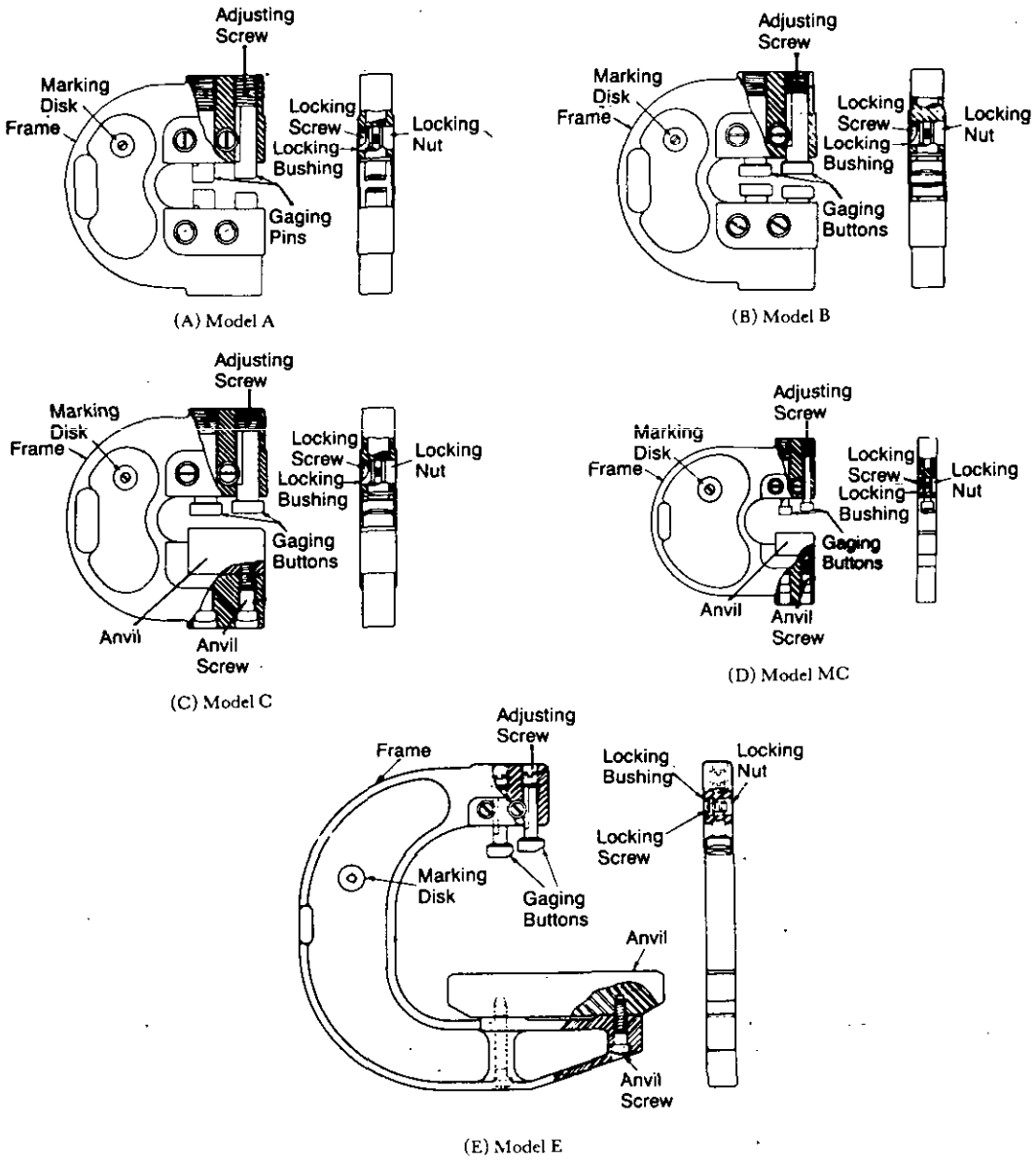

From ANSI B47.1-1981, *Gage Blanks*. Copyright © 1981 by The American Society of Mechanical Engineers, New York, NY.

Figure 7-16. Plain Adjustable Snap Gages

on the anvil before the gaging buttons come in contact. The plain adjustable snap gage should not be used if a setting tolerance of less than 0.003 in. is required. If it must be used at a tolerance less than 0.003 in., then the anvils must be lapped to size after setting.

7.4.1.3 Built-Up Snap Gages

The built-up snap gage or snap gage with extended anvil is essentially a fixed snap gage capable of gaging external dimensions when the product tolerance is equal to or greater than 0.003 in. It consists of two hardened tool steel anvils separated by a soft steel or gray cast iron spacer. The three pieces are fastened together with socket head screws. When the gaging dimension is greater than 1.0 in., the anvils should be fastened by screws entering from each anvil. The length and width specifications for the anvils are governed by the product sizes. Because built-up snap gages can be disassembled, they are easier to renovate when worn than fixed snap gages are.

Downloaded from http://www.everyspec.com

The built-up snap gage is used in cases in which product characteristics prevent the use of other types of snap gages. It usually is not used for low production volumes. Built-up snap gages are available in single-ended, double-ended, and progressive construction. The progressive construction is preferred because it allows faster inspection, but occasionally product geometry makes it necessary to use a double- or single-ended construction. Because built-up snap gages usually are designed for special purposes, standardization is extremely difficult; however, the AGD Standard (Ref. 1) does include two size ranges. Construction details for small (range 0 to 0.25 in.) and large (range 0.25 in. to 1.00 in.) built-up snap gages are shown on Fig. 7-17, along with a progressive built-up snap gage.

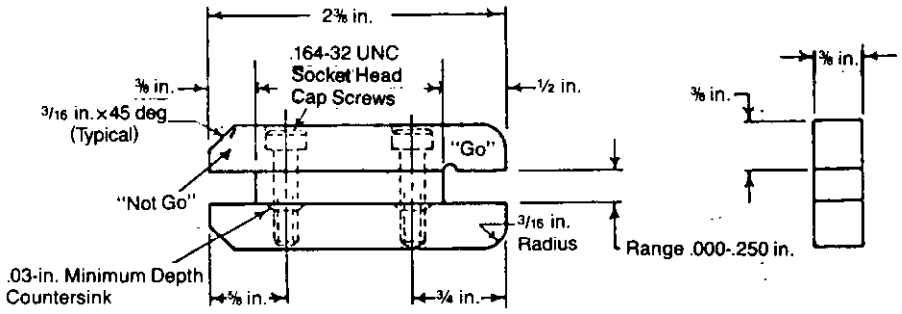

(A) Small Built-Up Snap Gage

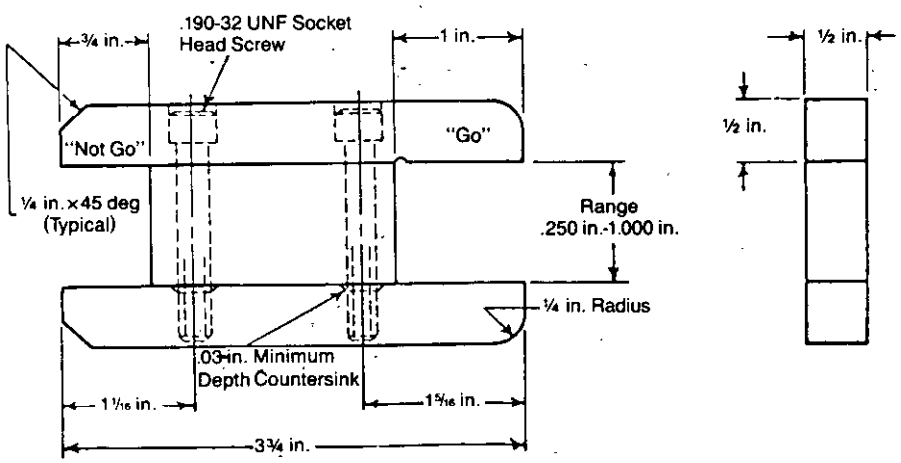

(B) Large Built-Up Snap Gage

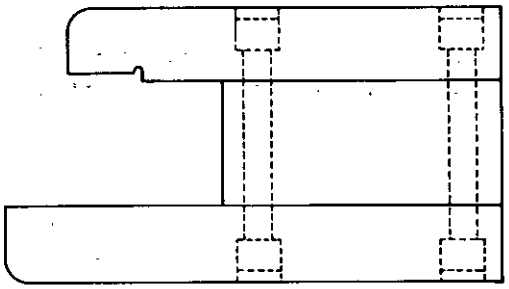

(C) Progressive Built-Up Snap Gage

From ANSI B47.1-1981, *Gage Blanks*. Copyright © 1981 by The American Society of Mechanical Engineers, New York, NY.

Figure 7-17. Built-Up Snap Gages

Downloaded from http://www.everyspec.com

7.4.1.4 Special Snap Gages

Special snap gages are designed to meet special product or gaging requirements that standard gages cannot meet. Special snap gages can broadly be classified according to the product being gaged or the special gaging requirements. The special types of snap gages are screw thread snap gages (discussed in Chapter 8), snap gages for features not accessible by standard gages, snap gages with handles, and snap gages with insulated grips to prevent heat transfer from the operator's hands to the gage. An example of a special snap gage for gaging features that are not accessible by standard snap gages is shown in Fig. 7-18. This gage has an elongated "C" frame to clear the obstructing product features.

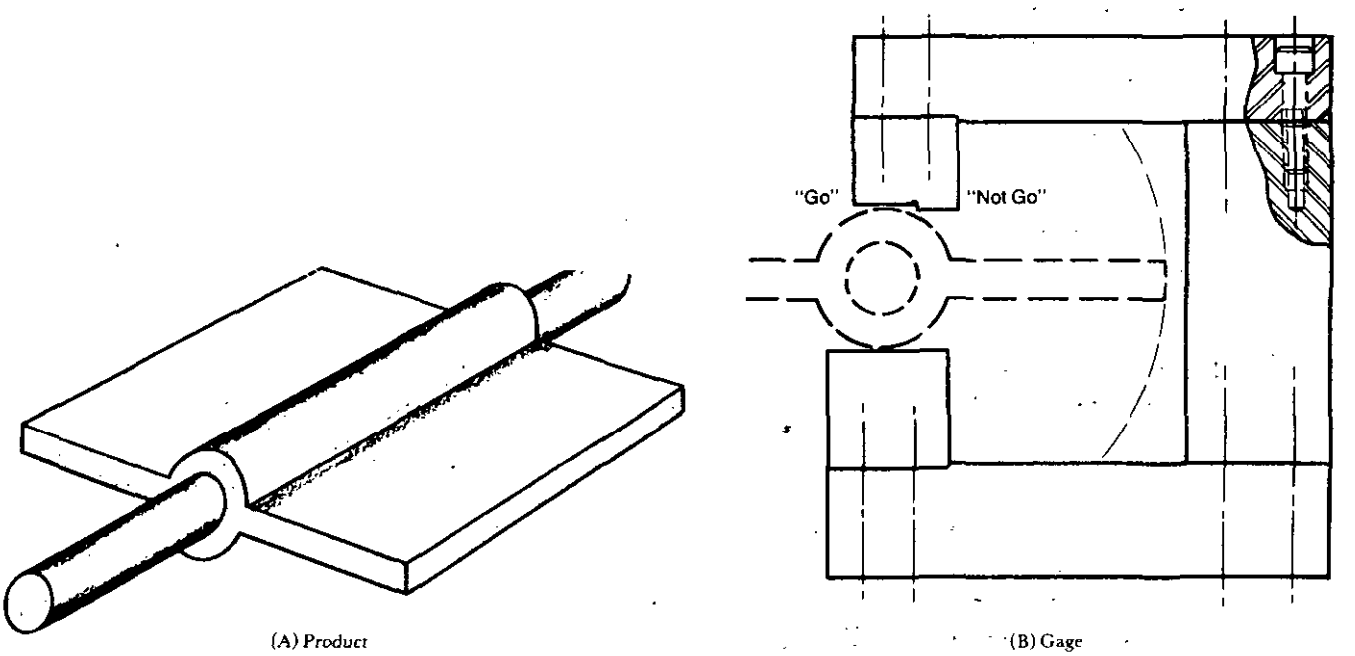

Figure 7-18. Special Snap Gages for Features Inaccessible by Standard Snap Gage

7.4.2 DESIGN OF A SNAP GAGE

Plain adjustable snap gages that use AGD Standard frames and other hardware have already been designed and are listed in MIL-STD-118, *Gages, Snap, Plain, Adjustable* (Ref. 12).

The paragraphs that follow provide a step-by-step procedure for designing a snap gage. Also listed are the criteria necessary for completing each step.

1. *Select Type of Snap Gage*:

The fixed snap gage is the basic type of snap gage and can be used for small inspection volumes. The double-ended fixed snap gage is more convenient than the single-ended gage, but it may be bulky if large dimensions are involved. The progressive fixed snap gage is more convenient than the single- or double-ended gage but is also more expensive. Therefore, an AGD Standard (plain adjustable) snap gage is preferred to a fixed snap gage.

Plain adjustable snap gages are more adaptable, flexible, and economical than the progressive fixed snap gage. The choice of an AGD Standard model is based on the performance requirements given in Table 7-13 (Ref. 1).

If product characteristics prevent the use of any of the types of gages indicated in Table 7-13, a built-up snap gage may be used even though it is rarely used for low inspection volume applications. Product geometry and convenience requirements dictate the choice of single-ended, double-ended, or progressive construction. The progressive construction is preferred because it allows faster inspection. Occasionally, the product configuration or gaging requirements dictate the use of special snap gages.

2. *Select Material of Construction.* The "C"-shaped body of the snap gage usually is made of cast iron. The gaging elements generally are made of hardened high carbon, high chromium alloy steel. For very high

Downloaded from http://www.everyspec.com

TABLE 7-13. SNAP GAGE SELECTION BASED ON PERFORMANCE REQUIREMENTS (Ref. 1)

Type of Inspection	Size Range, in.	AGD Standard Snap Gage Model
External dimension (diameter, length, thickness)	0. to 12.000 0.5 to 11.250	A B
External dimension if convenience and durability are desired	0 to 11.625	C
Miniature product	0 to 0.760	MC
Product inspection if a surface should bear on anvil for convenience and accuracy	0 to 5.6875	E

inspection quantities, carbide gaging elements can be specified to extend gage life.

3. *Select Gage Maker's Tolerances.* Gage maker's tolerances for plug gages are selected as described in Step 3 of par. 7.2.2.

4. *Select Wear Allowances.* Wear allowances for fixed or built-up snap gages are selected as described in Step 4 of par. 7.2.2 for plug gages. No wear allowances are provided on plain adjustable snap gages.

5. *Calculate the "Go" and "Not Go" Dimensions*:

"Go" dimension = MMC dimension of product − wear allowance
"Go" tolerance = Gage maker's tolerance applied minus
"Not Go" dimension = LMC dimension of product
"Not Go" tolerance = Gage maker's tolerance applied plus.

6. *Specify Surface Finish and Hardness.* Surface finish values for all gage surfaces should be selected from Tables 7-8 and 7-9 and hardness values from Table 7-10.

7. *Select Standard Blank and Anvil Sizes.* Refer to AGD Standard (Ref. 1) for standard gage blank, anvil, and frame sizes.

8. *Prepare Gage Drawings and/or Specifications.* Prepare gage drawings in accordance with Refs. 6, 7, 8, and 9 if a nonstandard gage is selected. If a commercially available gage is chosen, prepare gage specifications.

7.4.3 EXAMPLE OF ADJUSTABLE SNAP GAGE DESIGN

An example of an adjustable snap gage design using the step-by-step procedure of par. 7.4.2 follows.

7.4.3.1 Requirement

Design a snap gage to inspect a product with the configuration that follows.

Product Configuration. External Diameter = 4.000 in. $^{+0.000}_{-0.007}$ in.

7.4.3.2 Solution

The solution follows:

1. *Select Type of Snap Gage.* AGD Standard Model C.
2. *Select Material of Construction*:

Gage Part	Material of Construction
Frame	Cast iron
Gaging elements	High carbon, high chromium alloy steel (hardened).

Downloaded from http://www.everyspec.com

3. *Select Gage Maker's Tolerances*: (from Table 7-6)

Product Characteristics	Tolerance "Go" Gage	Tolerance "Not Go" Gage
4.000 in. feature size and − 0.007 in. tolerance	0.0003 in.	0.0002 in.

4. *Select Wear Allowance.* There is no wear allowance on a plain adjustable snap gage.
5. *Calculate "Go" and "Not Go" Dimensions*:

"Go" dimension = MMC dimension of product = 4.000 in.
"Go" tolerance = Gage maker's tolerance applied minus = −0.0003 in.
"Not Go" dimension = LMC dimension of product = 3.993 in.
"Not Go" tolerance = Gage maker's tolerance applied plus = +0.0002 in.

6. *Specify Surface Finish and Hardness* (from Tables 7-8, 7-9, and 7-10)

	Surface Finish	Hardness
Gaging elements	8 μin.	C60 min (Rockwell).

7. *Select Standard Frame and Hardware.* The AGC Standard frame and other hardware are selected from Ref. 1 as follows:

Part	Source	Identifier
Frame	Table 61 (includes complete dimensions)	Symbol C-8X (size no. 8)
Adjusting Screw (for Frame Size No. 8)	Table 64	.3950-40 UNS-3A.
Locking Screw (for Frame Size No. 8)	Table 65 (includes complete dimensions)	.190-32UNF-2A
Locking Nut (for Frame Size No. 8)	Table 66 (includes complete dimensions)	.190-32UNF-2B
Locking Bushing (for Frame Size No. 8)	Table 66 (includes complete dimensions)	—
Gaging Buttons	Table 68 (includes complete dimensions)	Button diameters 0.625 to 0.630 in.

8. *Prepare Gage Drawings and/or Specifications*:

Because this is a commercially available AGD Standard gage, specification of the gage will be sufficient for its procurement. The specification must include the following information:

AGD Standard frame and other hardware designations	As listed in Step 7
"Go" dimension	4.000 − 0.0003 in.
"Not Go" dimension	3.9930 + 0.0003 in. − 0.0000

The relationship between a cylindrical product and the adjustable snap gage in this example is illustrated in Fig. 7-19(A). Fig. 7-19(B) illustrates the relationship between a rectangular product and adjustable snap gage.

Downloaded from http://www.everyspec.com

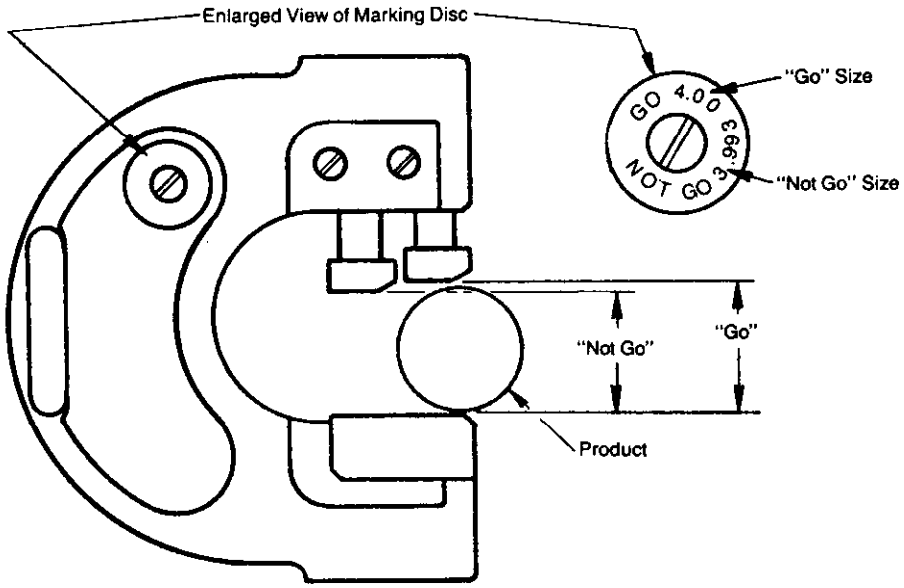

(A) Model C for Cylindrical Products

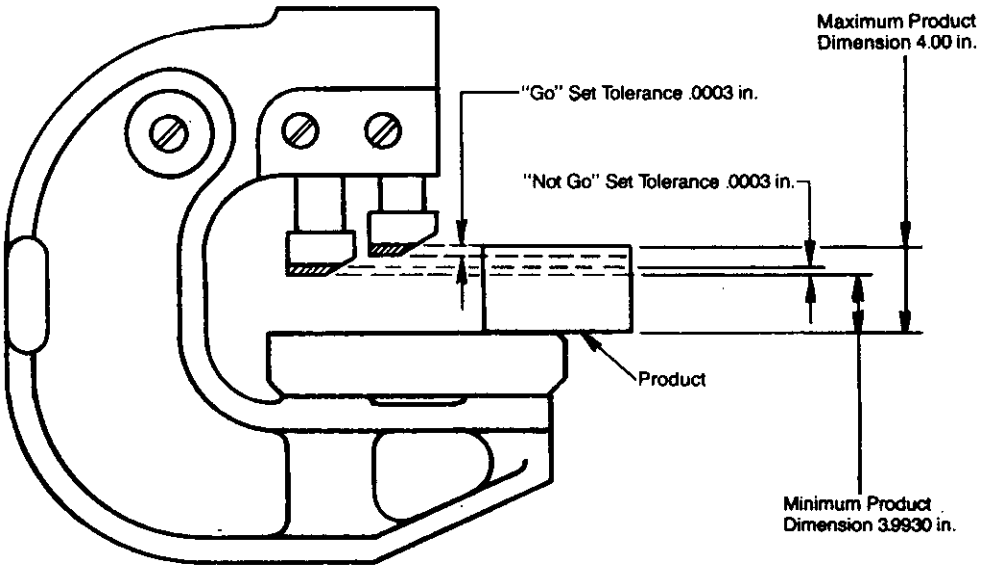

(B) Model E With Extended Anvil for Rectangular Products

Figure 7-19. Product and Adjustable Snap Gage Tolerance Relationship

7.5 FLUSH PIN GAGES

A flush pin gage uses the axial extension of a sliding pin with respect to a reference surface to determine the acceptability of a part. The pin contacts the measured surface and the operator feels the two surfaces at the opposite end to determine whether the extension of the pin is within limits. Usually, flush pin gages are used for checking the following dimensional features:

1. Depth of straight or tapered holes
2. Height of straight or tapered bosses
3. Location and position of holes, bosses, etc.
4. Perpendicularity.

Downloaded from http://www.everyspec.com

Because the accuracy of flush pin gages depends upon the inspector's sense of touch, they are recommended only for dimensions with tolerances equal to or greater than 0.005 in. An inspector's sense of touch is considered unreliable for tolerances less than 0.005 in.; therefore, other methods, such as dial indicators, are required. The general construction features of a flush pin gage are a sleeve and pin with a sliding fit, i.e., the pin is free to move axially within the sleeve without being loose. The top surfaces of the sleeve and pin are machined accurately perpendicular to their axes at the maximum and minimum dimensions. Either the sleeve or the plunger has a step cut on the top surface, the depth of which is equal to the product tolerance modified by the gage maker's tolerance. The flush pin gage also has a device to retain the pin within the sleeve.

Usually, gaging is performed by bringing the bottom surface of the sleeve in contact with the reference surface of the product. The sliding pin is then made to contact the measuring surface. Whether the product is within acceptable limits is determined by touching the "feel" surfaces of the pin and sleeve. If the feel surface is outside the step, the product is rejected. Fig. 7-20 illustrates the principles of operation. A properly designed flush pin gage guarantees assembly because it can also check tapers and improper radii at the bottom of cavities.

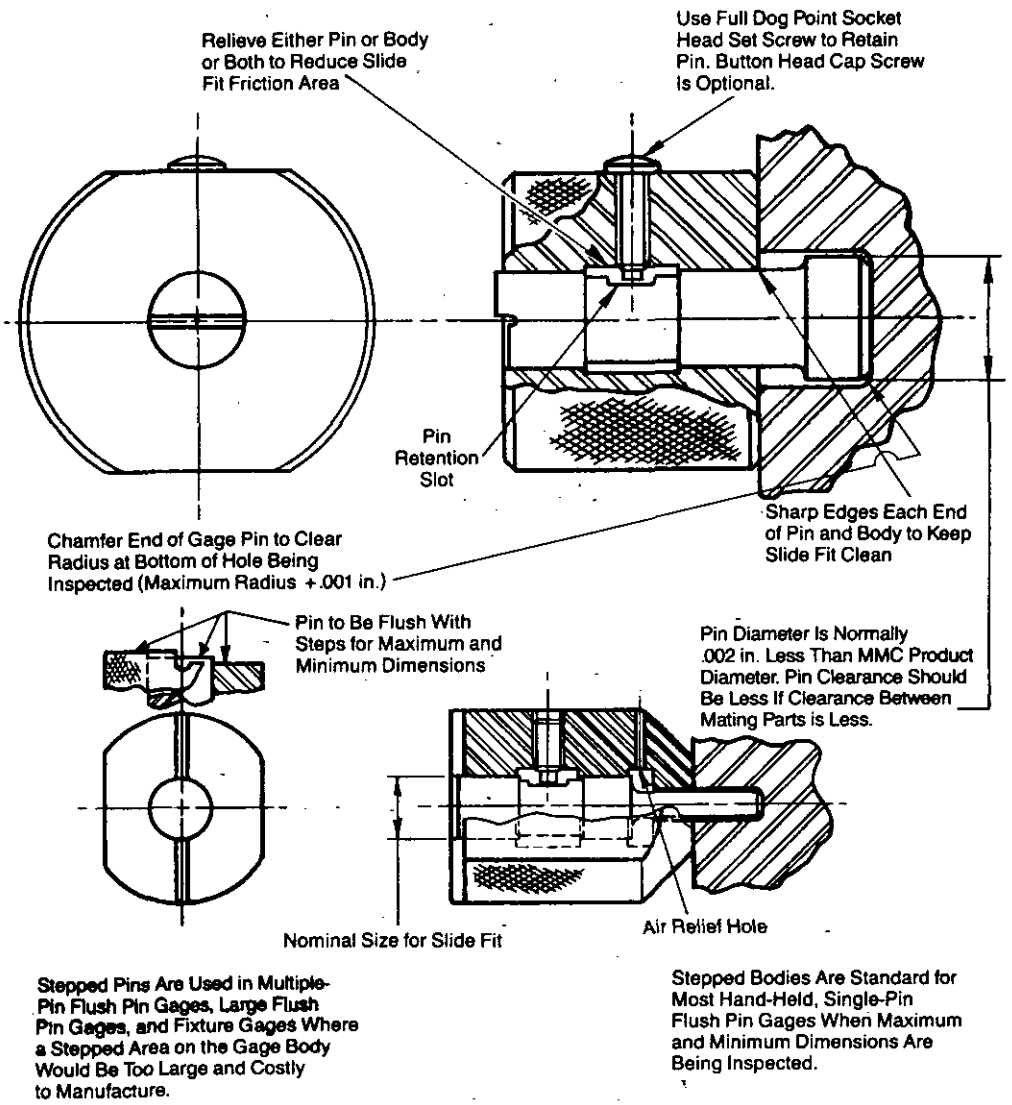

Figure 7-20. Principles of Flush Pin Gage Operation

Downloaded from http://www.everyspec.com

7.5.1 TYPES

The AGD Standard (Ref. 1) recommends four flush pin gage designs for different size ranges—the barrel type, the bar type, and the large and small bar-spanner, or bar-countersink, types. There are also several other flush pin gage designs in use for special applications. The most significant of these special designs are multiple pin, spring loaded, built-up, internal, taper, and flush pin gages for drilled or tapped holes.

7.5.1.1 Standard Flush Pin Gages

A discussion of standard flush pin gages follows:

1. *Style 1, Barrel Type.* This gage is called barrel type because of the cylindrical shape of the body. Its use is recommended in the size range 0.25 to 0.75 in. This and other standard flush pin gages are shown in Fig. 7-21. The wall thickness of the barrel is at least 5/16 in. The surface of the body is knurled and has two flats at diametrically opposite positions. The ratio of length to diameter of the pin should be low enough to maintain stability. A retaining device that consists of a buttonhead socket cap screw is located 0.5 in. from the top surface of the body.

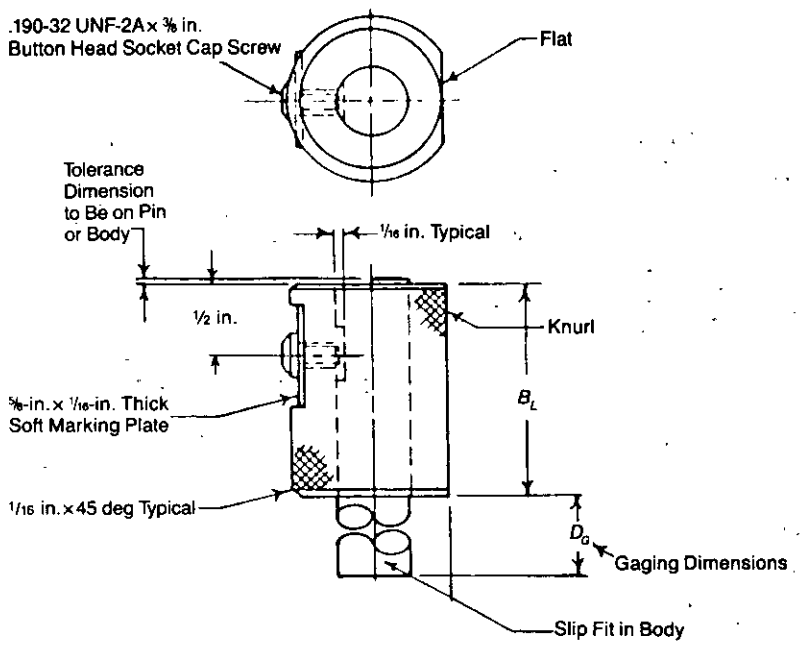

(A) Recommmended Design of Barrel-Type Flush Pin Gage

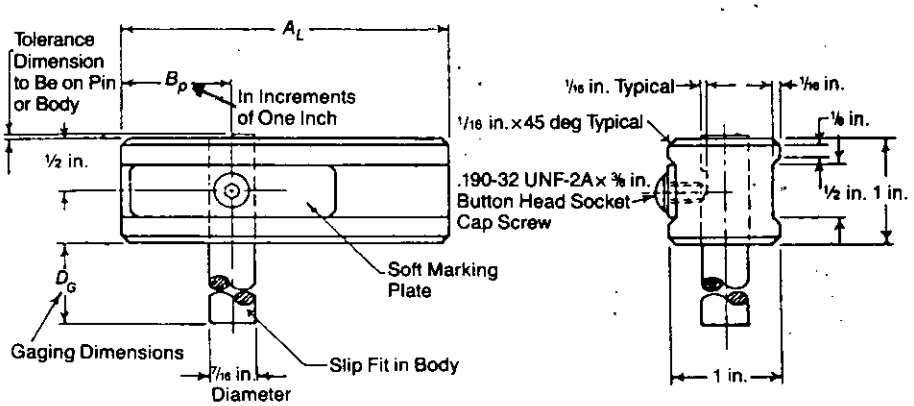

(B) Recommended Design of Bar-Type Flush Pin Gage

From ANSI B47.1-1981, *Gage Blanks.* Copyright © 1981 by The American Society of Mechanical Engineers, New York, NY.

Figure 7-21. Standard Flush Pin Gages

(cont'd on next page)

Downloaded from http://www.everyspec.com

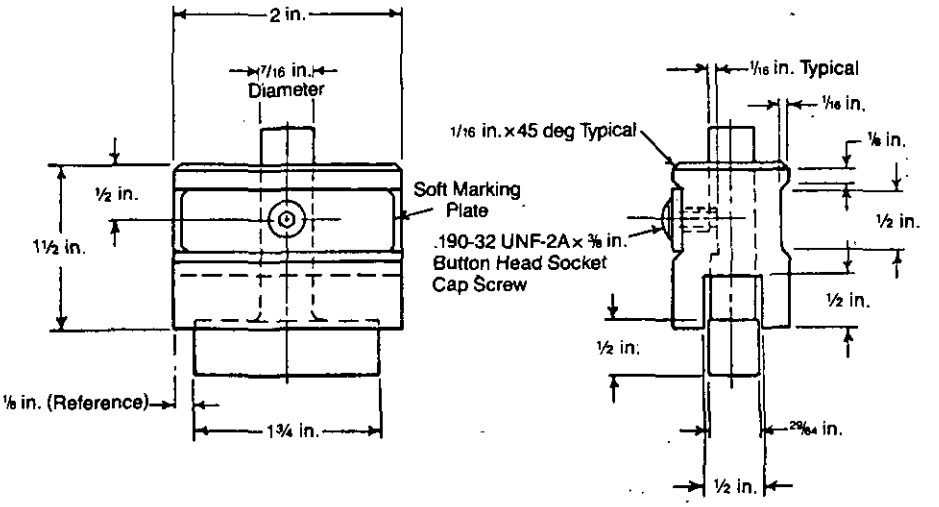

(C) Recommended Design of Small Countersink-Type Flush Pin Gage

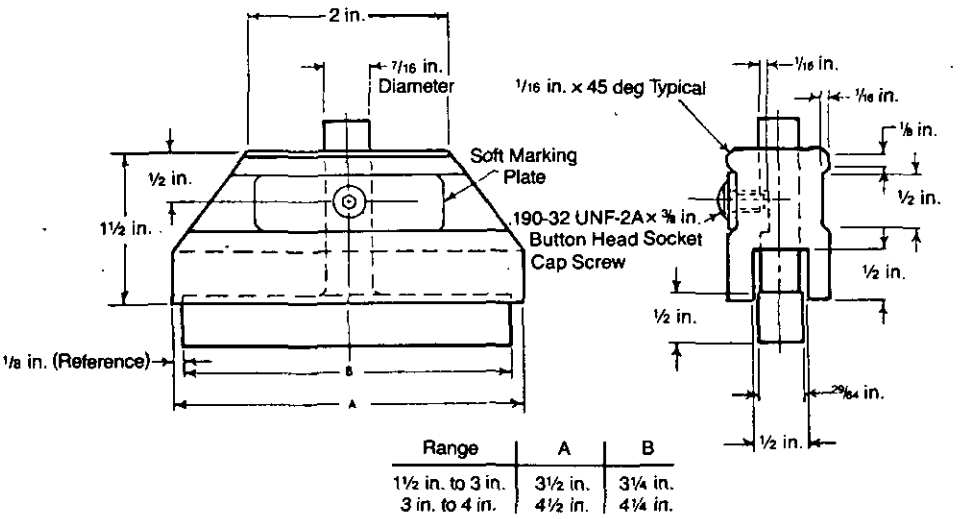

Range	A	B
1 1/2 in. to 3 in.	3 1/2 in.	3 1/4 in.
3 in. to 4 in.	4 1/2 in.	4 1/4 in.

(D) Recommended Design of Large Countersink-Type Flush Pin Gage

Figure 7-21. (cont'd)

2. *Style 2, Bar Type.* A bar-type flush pin gage has a pin that is free to slide in a rectangular body, also known as a bar. The bar-type flush pin gage is recommended for the size range 1.51 to 8.51 in. As Fig. 7-21 illustrates, the pin can be located anywhere along the length of the bar. Ref. 1 recommends bar lengths in 2.0-in. increments and a 7/16-in. pin diameter as standard. Other pin diameters, however, can be used depending on the application requirements. Location of the pin on the bar is recommended at 1.0-in. increments from one end of the bar.

3. *Styles 3A and 3B, Bar-Spanner, or Bar-Countersink, Type.* The bar-spanner, or bar-countersink, flush pin gage is used for gaging depths of countersunk holes or depth dimensions that a straight pin cannot access. Ref. 1 recommends two designs based on the size of the countersunk hole. These designs are called small countersink-type and large countersink-type, respectively. The small countersink-type gage is recommended for a range of 0.75 in. to 1.5 in., whereas the large countersink-type is recommended for 1.5 in. to 4 in. Both sizes are shown in Fig. 7-21.

Downloaded from http://www.everyspec.com

7.5.1.2 Special Flush Pin Gages

A discussion of special flush pin gages follows:

1. *Flush Pin Gages for Drilled Holes.* The depth of a drilled hole is usually the dimension from the product surface to the bottom of the cylindrical portion of the hole. The depth of the conical portion at the end of the hole is not included. The intersection between the cylindrical and conical portions of the hole, however, may not be well defined because of drill wear. Therefore, instead of making contact at this intersection, the flush pin gage for drilled holes is provided with a smaller tip diameter to make contact on the conical portion of the hole as shown in Fig. 7-22. This reduction in diameter can also be achieved by using a conical or cylindrical tip. The additional distance by which the flush pin moves downward to contact the conical portion is added to the gaging size. Because this gage makes a line contact with the product, it is advisable to use carbide tips to retain a sharp edge if the inspection quantity is large.

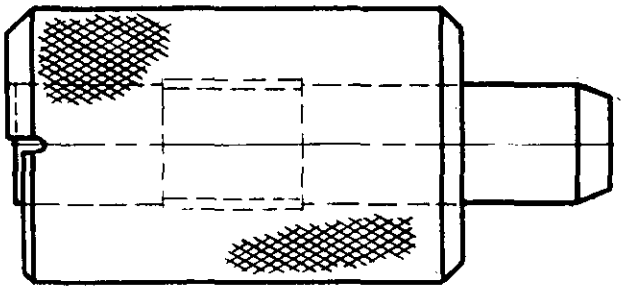

Figure 7-22. Flush Pin Gage for Drilled Holes

2. *Multiple Pin.* This gage is used to gage a stepped hole or shaft. As shown in Fig. 7-23, the basic construction of this type of gage is similar to that of an ordinary flush pin gage except that it has a second pin sliding inside the outer pin. The outer pin provides the gaging surface from which the inner pin measures; the

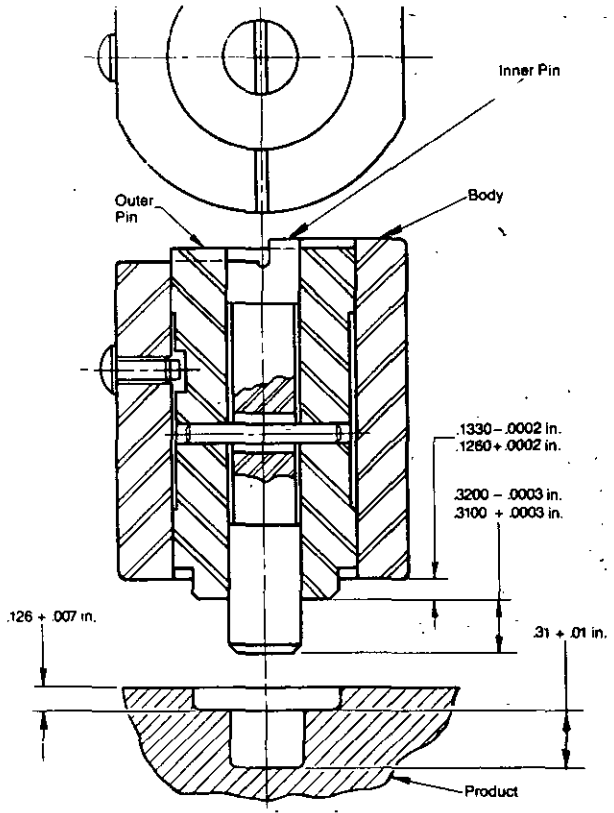

Figure 7-23. Multiple-Pin Flush Pin Gage

Downloaded from http://www.everyspec.com

gage body does the same for the outer pin. There are two sets of steps, one for the body and the outer pin and the second for the outer pin and the inner pin. Because this gage is custom designed and expensive to build, its use should be considered only for high-volume items.

3. *Spring Loaded.* A spring-loaded flush pin gage eliminates the need for the inspector to seat the pin on the product before gaging; the spring establishes contact between the pin and the product. Because the pins are held in position by springs, the inspector has only to touch the feel surfaces. This feature is especially useful when a number of elements are to be checked in one setup; it also speeds up the gaging operation.

4. *Built-Up.* This is a special-purpose gage used to check lengths, depths, thicknesses, and locations in one setup. One or more standard flush pin gages are mounted on a frame or case along with holding, positioning, and clamping devices. The shape, number of gages, and size of this type of gage depend entirely on the product configuration and the gage designer's creativity.

5. *Internal Flush Pin Gages.* An internal flush pin gage, shown in Fig. 7-24, is used to gage the height of a boss or other male feature. The design of these gages is similar to other flush pin gages with the following additional requirements:

a. Length of gage body = Product feature dimension + 3 × pin diameter.

b. For product feature dimensions up to ⅝ in., a slot should be provided in the body to permit viewing the contact between the product and pin.

c. For product feature dimensions larger than ⅝ in., a hole should be drilled in the body to permit viewing the contact between the product and pin.

d. The lower edges of the receiving hole in the flush pin gage body should be chamfered to clear any fillets at the base of the male feature of the product.

6. *Taper Flush Pin Gage.* A taper flush pin gage is used to gage the distance along an axis between a point on the surface and a datum plane of a tapered cylindrical hole or a boss. These gages operate on the same

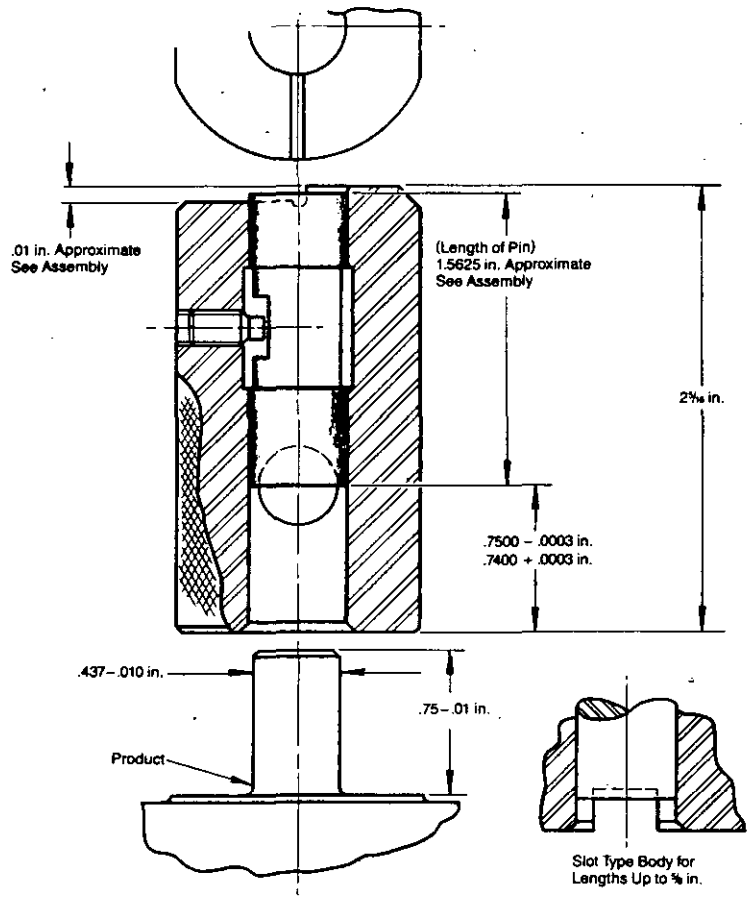

Figure 7-24. Internal Flush Pin Gage

Downloaded from http://www.everyspec.com

principle as taper plug and taper ring gages. (See pars. 7.2.1.2 and 7.3.1.2, respectively.) The only difference between the taper flush pin gage and a flush pin gage for a plain hole is that either the sleeve (body) or the pin is tapered to suit the taper in the product feature. The gage taper has the same dimensions as the product feature taper, but the tolerance on this taper should be in the direction such that the gaging element contacts the cone in the desired location.

7. *Flush Pin Gages for Tapped Holes.* A flush pin gage for a tapped hole is the same as a standard flush pin gage, except for the pin diameter. In tapped holes any possibility of interference between thread crests and the pin must be eliminated. This is achieved by selecting a pin diameter smaller—approximately 0.002 in.—than the minor diameter of the tapped hole. If the mating part has a pilot that extends into the tapped hole, the flush pin gage should also have a pilot, and the diameter of this pilot must be slightly smaller than the pilot hole diameter.

7.5.2 DESIGN OF A FLUSH PIN GAGE

7.5.2.1 General Design Procedure

The following is the step-by-step procedure for designing a flush pin gage. Also listed are the criteria necessary to complete each step.

1. *Select Type of Flush Pin Gage*:

The selection criteria include the size of the feature being gaged and the performance requirements. The selected gage must allow easy application and withdrawal of the gage and also must allow easy access to all the feel surfaces. If a standard flush pin gage can be used, the size of the feature being gaged dictates the choice of an AGD Standard design. Performance requirements determine the choice of a special flush pin gage design.

AGD Standard (Ref. 1) recommendations for flush pin gages for various size ranges are given in Table 7-14.

The performance requirements given in Table 7-15 mandate selection of a special flush pin gage.

2. *Select Material of Construction.* In most cases the pins and bodies are made of tool steel. Depending on the application, however, other materials may be selected from Table 7-4.

3. *Select Gage Maker's Tolerances.* Based on the product size and tolerance, the gage maker's tolerance can be obtained from Table 7-6, or the 10% rule (described in Step 3 of par. 7.2.2) can be applied.

4. *Select Standard Body and Pin Size.* Obtain the body and pin size suitable for the gaging dimension from Ref. 1. If a non-AGD standard flush pin gage is selected, the sleeve and plunger should be selected to meet the inspection requirement.

TABLE 7-14. FLUSH PIN GAGE SELECTION BASED ON SIZE (Ref. 1)

Size Range, in.	Style	AGD Standard Design
0.25 to 0.75	1	Barrel
1.51 to 8.51	2	Bar
0.75 to 1.50	3A	Bar-spanner or bar-countersink
1.50 to 4.00	3B	Bar-spanner or bar-countersink

TABLE 7-15. FLUSH PIN GAGE SELECTION BASED ON PERFORMANCE REQUIREMENTS

Performance Requirement	Special Flush Pin Gage
Drilled hole	Flush pin gage for drilled hole
Stepped hole or shaft	Multiple pin
Multiple elements in one setup	Spring loaded
Ease of inspection	Built-up

Downloaded from http://www.everyspec.com

5. *Calculate Maximum and Minimum Dimensions and Tolerances*:

Maximum dimension = LMC gaging dimension
Minimum dimension = MMC gaging dimension
Step size = product tolerance.

Also provide necessary clearances on the gage body or pin for any obstructions to the gaging operation caused by chamfers, radii, fillets, and recesses due to drill points on the product. The flush pin gage body and the pin must always clear the MMC of the product feature.

6. *Specify Surface Finish and Hardness*. Surface finish values for all gage surfaces should be obtained from Tables 7-8 and 7-9 and hardness values from Table 7-10.

7. *Select Standard Blank Sizes and Specify Knurling*. Appropriate blank sizes for the flush pin gage parts may be selected from Ref. 1. Knurling should be specified for cylindrical gage parts that are hand held during gaging.

8. *Prepare Gage Drawings and/or Specifications*. If special gages are used, a full set of gage drawings should be prepared in accordance with Refs. 6, 7, 8, and 9. For AGD standard gages detailed specifications should be prepared. All "feel" edges and steps on the surfaces of the body or pin should be sharp to insure accuracy, and a note to this effect must appear on the drawing.

7.5.2.2 Design Criteria for Special Flush Pin Gages

In addition to the flush pin gage design steps presented in par. 7.5.2.1, the following general design criteria should be considered when designing special flush pin gages:

1. For the sleeve, a knurled cylindrical body having a minimum wall thickness of 5/16 in. with two flats at diametrically opposite positions should be specified. The flats are for marking purposes.
2. The maximum ratio of the length of the body to the diameter of the sliding pin should be 3:1.
3. A retaining device, such as a buttonhead socket screw or dog point set screw, should be provided.

7.5.3. EXAMPLE OF FLUSH PIN GAGE DESIGN

An example of a flush pin gage design using the step-by-step procedure of par. 7.5.2.1 follows.

7.5.3.1 Requirement

Design a flush pin gage to inspect a product with the configuration that follows.

Product Configuration. A drilled hole as shown in Fig. 7-25(B).

7.5.3.2 Solution

The solution follows:

1. *Select Type of Flush Pin Gage*:

Product Characteristics	Gage
Drilled hole	Flush pin gage for drilled holes.

2. *Select Material of Construction*. (from Table 7-4) Tool steel for body and pin.
3. *Select Gage Maker's Tolerances*. (from Table 7-6 for 1.0-in. dimension and 0.007-in. tolerance)
   Gage maker's tolerance on gaging dimension = 0.0002 in.
4. *Select Standard Body and Pin Size*. Even though this is a special flush pin gage, an AGD Standard barrel can be used. The pin must be dimensioned to suit the drilled hole. Based on the hole diameter, a body having the following dimensions is selected from Table 83, Ref. 1:

   Barrel diameter B_L = 1.25 in.
   Barrel length C = 1.75 in.

Downloaded from http://www.everyspec.com

5. *Calculate Body and Pin Dimensions*:

Refer to Fig. 7-25(A). The dimensions for flush pin gages for drilled holes can be calculated from the geometric and empirical relationships indicated by the following set of equations:

$$\left.\begin{aligned}
A_1 &= D - 0.002, \text{ in.}\\
A_2 &= D - 2[1 - \cos(\theta/2)]R, \text{ in.}\\
D_3 &= \frac{A_1 - A_2}{2\tan\phi}, \text{ in.}\\
D_1 &= L + [\sin(\theta/2) - \tan\phi]R, \text{ in.}\\
D_2 &= D_1 + T + \frac{0.5t}{\tan(\theta/2)}, \text{ in.}\\
G &= D_2 - D_1, \text{ in.}\\
\phi &= 0.25\theta, \text{ deg.}
\end{aligned}\right\} \qquad (7\text{-}1)$$

where

A_1 = diameter of cylindrical portion of flush pin for drilled hole, in.
A_2 = diameter of conical portion of flush pin for drilled hole, in.
D = minimum drilled hole diameter, in.
D_1 = minimum pin length of flush pin gage for drilled hole, in.

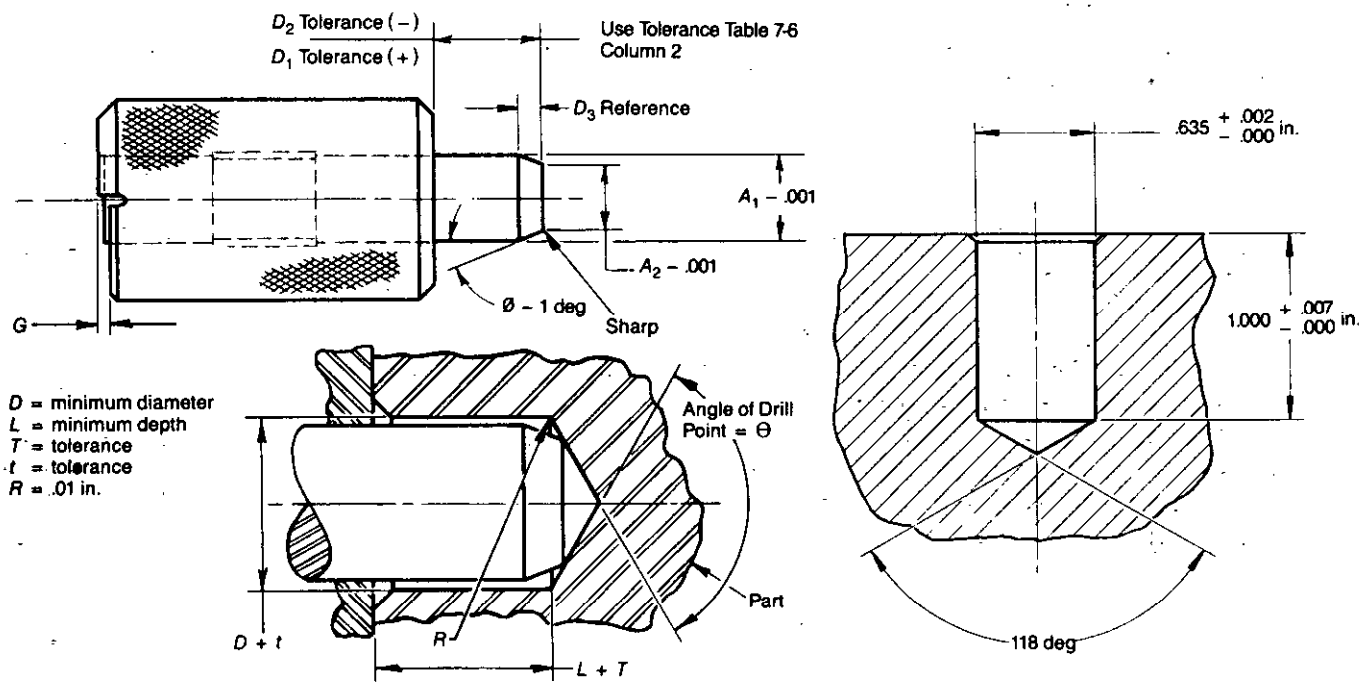

(A) Geometric Relationship for Flush Pin Gage

(B) Product Configuration

Figure 7-25. Flush Pin Gage Design Example—Inspection Requirement

Downloaded from http://www.everyspec.com

D_2 = maximum pin length of flush pin gage for drilled hole, in.
D_3 = length of conical portion of pin of flush pin gage for drilled hole, in.
L = minimum depth of cylindrical portion of drilled hole, in.
T = tolerance on L, in.
t = gage maker's tolerance on gaging dimension, in.
G = tolerance zone for pin length of flush pin gage for drilled hole, in.
ϕ = angle of conical portion of pin of flush pin gage for drilled hole, deg
θ = angle of drill point, deg.
R = corner radius, in. (gaging dimension).

In the example

$d = 0.635$ in.
$L = 1.0000$ in.
$\theta = 118$ deg
$T = 0.007$ in.
$t = 0.002$ in.

Therefore, by applying Eqs. 7-1,

$$A_1 = 0.635 - 0.002 = 0.633 \text{ in.}$$

$$A_2 = 0.635 - 2[1 - \cos(118/2)]\,0.01 = 0.6253 \text{ in.}$$

$$\phi = 0.25(118) = 29.5 \text{ deg}$$

$$D_3 = \frac{0.635 - 0.6253}{2\tan 29.5} = 0.00680 \text{ in.}$$

$$D_1 = 1.0000 + [\sin(118/2) - \tan 29.5] = 1.0029 \text{ in.}$$

$$D_2 = 1.0029 + 0.007 + \frac{0.5(0.002)}{\tan(118/2)} = 1.0105 \text{ in.}$$

$$G = 1.0105 - 1.0029 = 0.0076 \text{ in.}$$

6. *Specify Surface Finish and Hardness*: (from Tables 7-8, 7-9, and 7-10)

Gage Surface	Finish	Hardness
Internal surface of barrel	4 μin.	C60 min (Rockwell)
Contact surface of pin	8 μin.	C60 min (Rockwell)
Sliding surface	8 μin.	C60 min (Rockwell)
Feel surface	16 μin.	C60 min (Rockwell)

7. *Select Standard Blank Size*. The selected AGD Standard body and pin have the following dimensions: (from Table 82, Ref. 1)

Barrel:	Diameter $B = 1.25$ in.	Length $C = 1.75$ in.
Blank Pin Size:	Diameter $A = 0.625$ in.	Length $C + D = 1.75 + 1.00 = 2.75$ in.

8. *Prepare Gage Drawings and/or Specifications*. Because this is a special gage, a gage drawing must be prepared to show machining details for the pin. The specification for the AGD Standard body may be included on the drawing as shown in Fig. 7-26.

Downloaded from http://www.everyspec.com

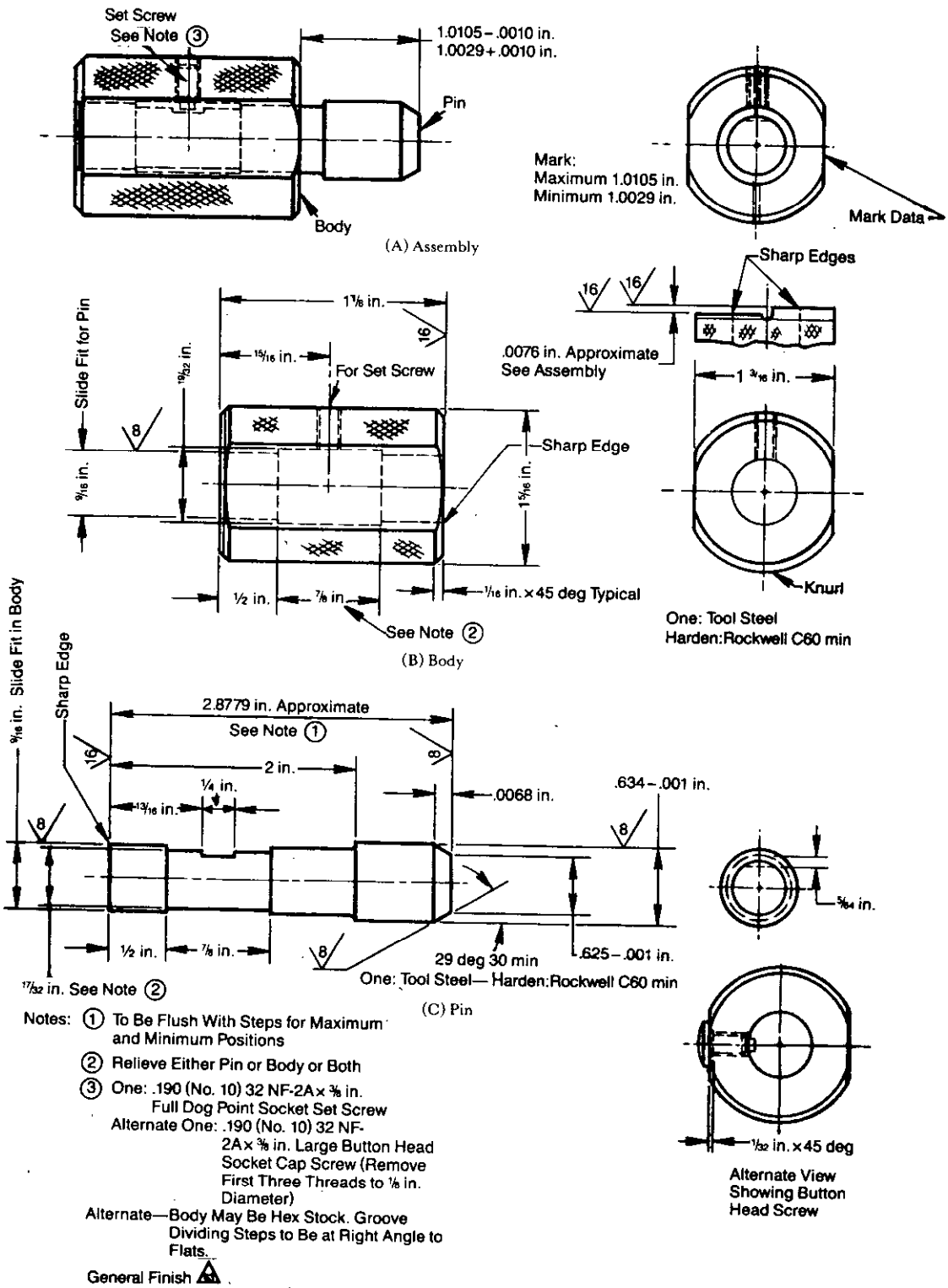

Figure 7-26. Flush Pin Gage Design Example

Downloaded from http://www.everyspec.com

7.6 TEMPLATE GAGES

The template gage is used mostly for checking profiles, lengths, widths, and depths. This gage is a flat plate shaped to conform to the product contour; therefore, it comes in a variety of shapes and sizes. In template gaging the inspector's visual acuity and judgment play an important part in the acceptance decision. For this reason template gages are not recommended where the product tolerance is less than 0.005 in. per in.

Hardened tool steel ⅛ in. to ⅜ in. thick is used for making small (up to 10 in. long) and medium (from 10 in. to 2 ft. long) template gages and the gaging surfaces are finished by grinding to the proper size. Larger gages, however, are usually made from machine steel, and the gaging surfaces are case hardened and then ground to the proper size. Usually the manufacturer is allowed to drill holes in the nonfunctional portions of the gage to locate and mount the gage for gang milling and grinding operations.

7.6.1 Types

Based on its use a template gage is given one of the following two designations:

1. For depths, lengths, and widths
2. For profiles.

7.6.1.1 Template Gages for Depths, Lengths, and Widths

Usually a template gage for depths, lengths, and widths is shaped like the letter "T". The underside of the crossbar is the gaging surface, which is ground and finished accurately flat. At the base of the "T", two steps are ground parallel to the finished surface on the underside of the crossbar and are separated by an undercut. The difference between the steps is equal to the part tolerance.

For a product tolerance of 0.03 in. or greater, a template gage is made in an "L" shape and scribelines are used to indicate the limits on the length. This gage speeds up inspection but is less accurate than the "T"-shaped gage. Usually a maximum width of 0.008 in. and a minimum depth of 0.005 in. are recommended for the scribelines. Figs. 7-27 and 7-28 illustrate some of the principles involved in designing template gages for depth and length. Fig. 7-28(C) illustrates a "U"-shaped gage. Gaging width with a template gage is analogous to gaging length.

7.6.1.2 Template Gages for Profiles

A template gage for checking profiles is made of hardened tool steel ground to the contour of the profile. Usually a profile template gage is made to the maximum profile, and scribelines mark the minimum profile limits. The gaging surface is chamfered on both sides to provide a thin sighting surface that ranges in thickness from 1/32 to 1/16 in.

If the profile being checked is not critical, the template gage is designed for a nominal (basic) profile, and visual comparison and judgment are used in accepting the product. The template gage is held against the product profile and is either sighted against a light or a feeler gage is used to check the gap. If the accuracy of the profile is important, it is necessary to have it checked by two template gages, one made to its minimum limit and the other to its maximum limit.

Because profile gaging with template gages involves operator judgment, use of these gages on critical and complicated profiles should be avoided. If the higher costs can be justified, an optical comparator is preferred.

7.6.2 DESIGN OF A TEMPLATE GAGE

A step-by-step design procedure for a template gage follows:

1. *Configure the Gage.* The template gage configuration depends on the feature to be inspected. For gaging depths, lengths, and widths, the gage is shaped like the letters "T", "L", or "U". For irregular profiles the gage will closely follow the product contours.

2. *Select Material of Construction.* Usually, for templates up to 2 ft long, hardened tool steel of commercially available standard thickness (⅛ to ⅜ in.) is specified. For templates longer than 2 ft, machine steel of appropriate thickness is specified. Dimensional stability must be considered.

Downloaded from http://www.everyspec.com

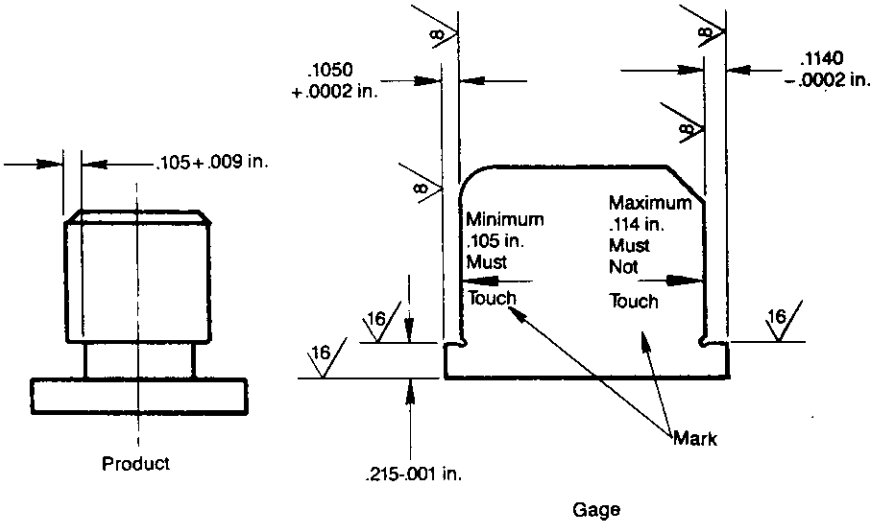

(A) Depth

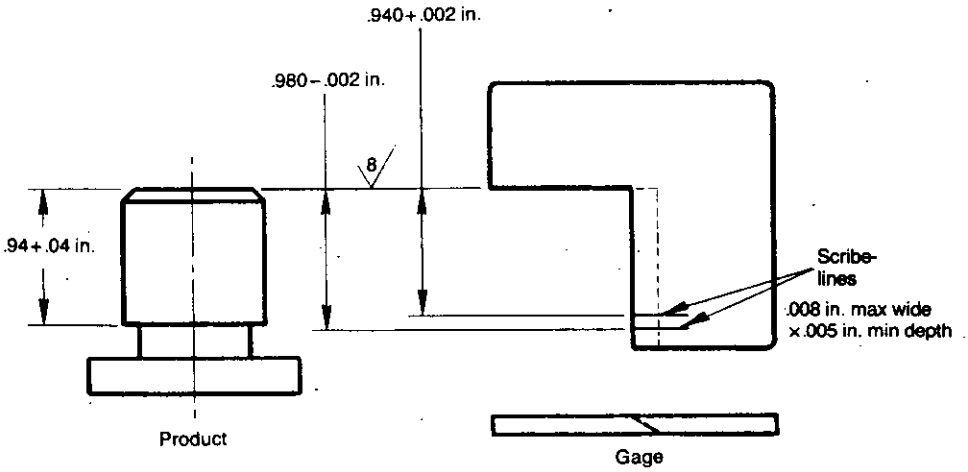

Tolerance on Location of Scribed Lines Should Ordinarily Be Plus or Minus .002 in. Measured to the Center of the Scribed Line.

(B) Length

Figure 7-27. Template Gages for Depth and Length

Downloaded from http://www.everyspec.com

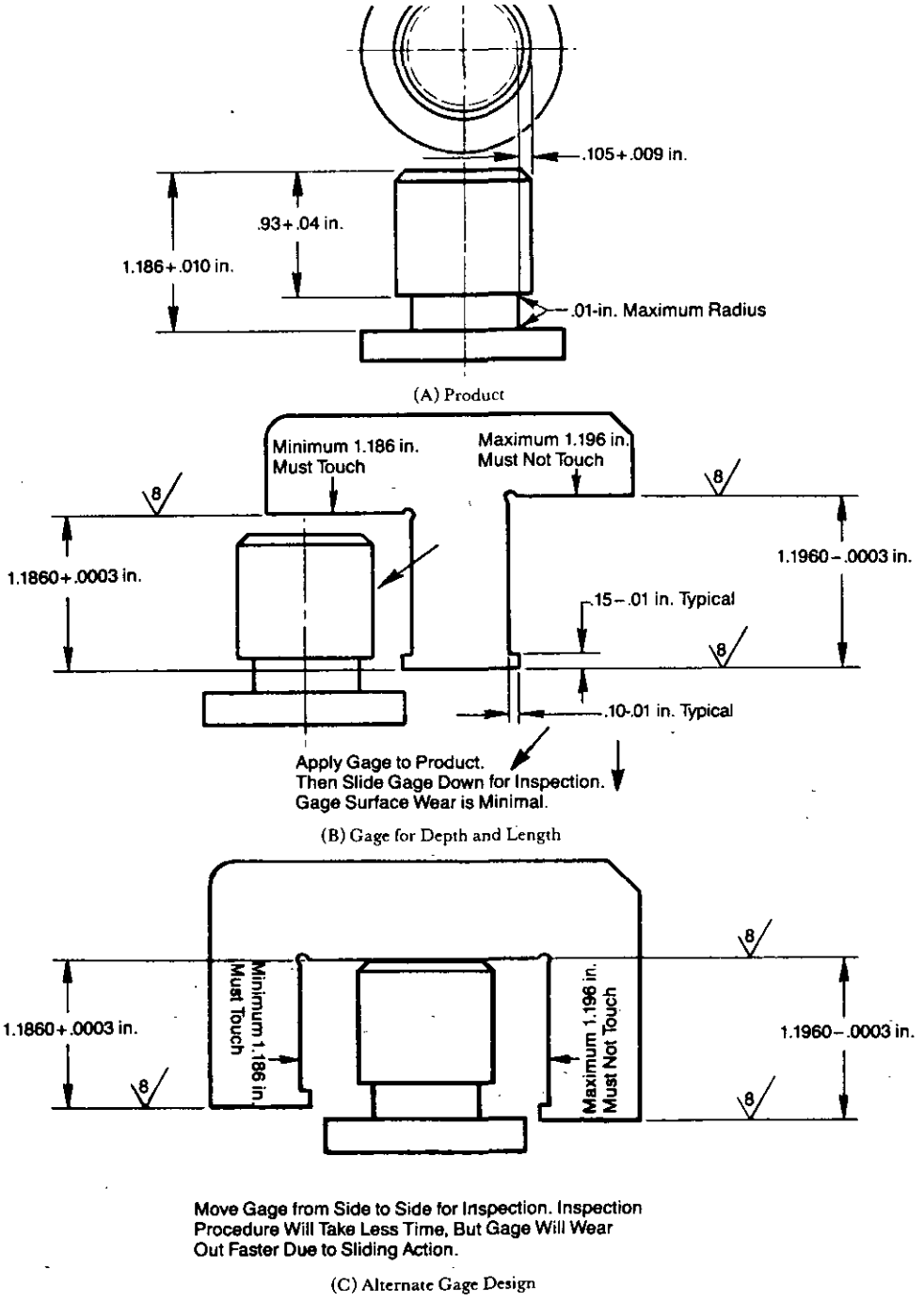

Figure 7-28. Alternate Designs for a Template Gage for Depth and Length

3. *Select Gage Maker's Tolerances for Each Feature:*

Straight lines, angles, and radii are common features of most profiles. Usually 10% of the total product feature tolerance is provided as the gage maker's tolerance. This tolerance is added (+) to the minimum (min) and subtracted (−) from the maximum (max) gage size.

For irregular profiles the gage profile is drawn to scale beside the product profile and a tolerance of 10% of product tolerance applied. The gage is then manufactured to the drawn profile.

If no tolerance for angles or radii is specified on the drawing, the gage tolerance will depend on the criticality of the profile. For nonfunctional profiles tolerance on angles should be ±5 minutes and on radii ± 5% of the radius.

Downloaded from http://www.everyspec.com

4. *Specify Chamfer on Gaging Edge.* A chamfer on one or both sides of the gaging profile should be specified to provide a relatively sharp (1/16 in. to 1/32 in. thick) sighting edge.

5. *Specify Surface Finish and Hardness.* Use of Tables 7-8, 7-9, and 7-10 is recommended in selecting surface finish and hardness values for these gages. Usually a surface finish of 16 μin. is provided along the gaging edge, and the rest of the surface has a commercial finish. The entire gage is hardened to a minimum of C60 on the Rockwell scale.

6. *Prepare Gage Drawings and/or Specifications.* A gage drawing should be prepared in accordance with Refs. 6, 7, 8, and 9.

7.6.3 EXAMPLE OF TEMPLATE GAGE DESIGN

An example of a template gage design using the step-by-step procedure of par. 7.6.2 follows.

7.6.3.1 Requirement

Design a template gage to inspect a product with the configuration that follows.

Product Configuration. Irregular profile as shown in Fig. 7-29.

7.6.3.2 Solution

The solution follows:

1. *Configure the Gage.* Because the product has an irregular profile, the gage is configured around a scaled drawing of the product, as shown in Fig. 7-29. The basic gage profile is drawn to coincide with the MMC profile of the product.

2. *Select Material of Construction.* Hardened tool steel of a commercially available thickness (⅛ to ⅜ in.) is selected.

3. *Select Gage Maker's Tolerances for Each Feature.* The gage maker's tolerance is 10% of the product profile tolerance applied as indicated in Fig. 7-29.

4. *Specify Chamfer on Gaging Edge.* A chamfer is specified along one side of the entire gaging profile to reduce the edge to a sharp 1/16-in. edge.

5. *Specify Surface Finish and Hardness*: (from Tables 7-8, 7-9, and 7-10)

Gage Part	Surface Finish	Hardness
Sighting edge	16 μin.	C60 min (Rockwell)
Rest of the gage	Commercial	C60 min (Rockwell).

6. *Prepare Gage Drawings and/or Specifications.* The necessary gage drawing is shown in Fig. 7-29(A).

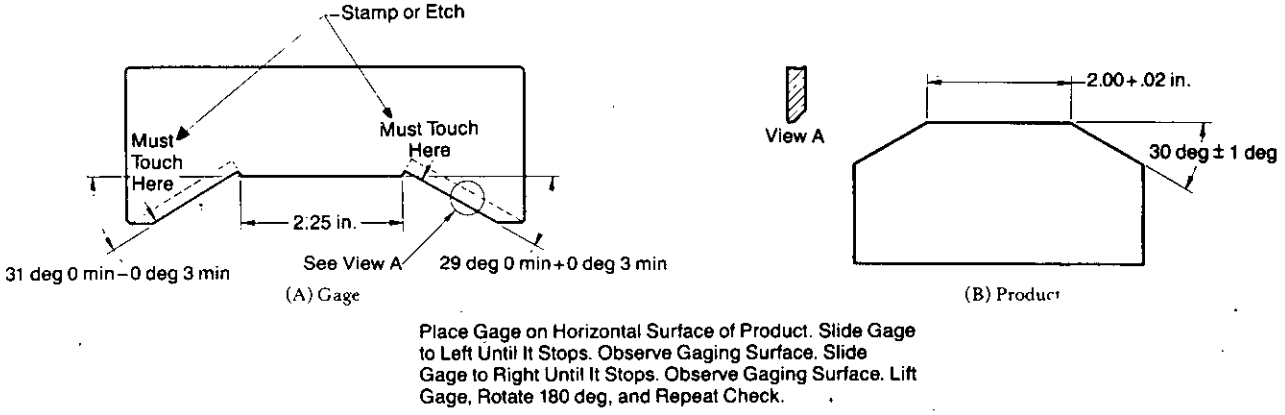

Figure 7-29. Product and Template Gage Configuration

Downloaded from http://www.everyspec.com

7.7 TRUE POSITION GAGE

A true position gage is used to check the location of a feature relative to a datum or to another feature within a pattern of features. If a pattern of features is being inspected, the relative location may be between the pattern and a datum. Often a true position gage is identified by the tolerancing concept used in dimensioning the positions of features—i.e., MMC, LMC, or regardless of feature size (RFS). (See pars. 2.4.4 through 2.4.6.) For example, a true position gage used to inspect an MMC-toleranced dimension may be referred to as an MMC gage.

The MMC gage is designed to inspect positional or form requirements of product features when the tolerances are modified by an MMC callout. In this case the available manufacturing tolerance is a function of the product feature size and the positional or form tolerance. Because products finished at MMC constitute the worst case assembly, the product feature dimension at its MMC is its most critical dimension. As the product feature dimension is finished away from its MMC dimension, the available positional or form tolerance is increased. This increase is equal to the amount of the departure of the finished product feature dimension from its MMC dimension. Thus the positional or form tolerances modified by an MMC callout are variable. This characteristic of the MMC tolerancing concept makes the MMC gage very practical because it permits the use of gaging elements of fixed size and location. These fixed elements automatically allow the position or form of the product feature to vary as the finished size of the feature varies from product to product. The most common MMC gages are the progressive plug, receiver, and spanner gages which are described in pars. 7.7.1, 7.7.2, and 7.7.3, respectively.

Gages designed for MMC dimensions and tolerances usually insure proper assembly of the products. Therefore, they are also known as functional gages. When the specified feature tolerance at MMC is zero, the MMC gages incorporate the "Go" gage elements in the functional gage, which eliminates the need for a separate "Go" gage and saves gage and inspection costs.

MMC gages have many advantages over RFS gages. Usually they are less expensive because they do not require moving parts or adjusting and centering devices. This lack of moving parts reduces the required frequency of calibration. Because the MMC concept allows the use of fixed gaging elements, these MMC gages are easier and faster to use. Relationships between the size and positional or form tolerances are incorporated in the gage. This reduces the need for operator skill and judgment, which in turn reduces errors. It should be remembered that LMC is that condition in which a feature, part, or datum contains the least amount of material within size limits—e.g., smallest shaft, largest hole. The specified tolerance applies only when the feature is at the least amount of material permitted by the size tolerance. This LMC tolerance increases by the exact amount the part (feature) departs from the LMC toward the MMC. LMC is applied in cases in which wall thickness is critical, in which play between related parts must be limited, or in which material distribution around castings or forgings must be controlled to assure there is sufficient material for subsequent machining. An LMC position gage is just the opposite of an MMC gage. That is, an MMC position gage verifies the "Go" condition of the virtual position of a hole, whereas an LMC gage verifies the "Not Go" condition. Design of an LMC gage is discussed in par. 7.7.4.

LMC gages have almost the same advantages as the MMC gages when compared with RFS gages—i.e., they frequently do not require adjusting and centering devices and are less expensive than RFS gages, they require less frequent calibration, and they are more practical because fixed gaging elements can be used.

The RFS gage is designed to inspect the relative positions of product features when the positional or form tolerance is modified by an RFS callout. Because the actual finished size of the product feature does not have any effect on the form or positional tolerance, the form or positional tolerances are constants. Inspection of the relative positions of features is done with a gage that has a centering element for the product datum feature. In practice, the actual finished size of the mass-produced product feature can vary within its size tolerance zone. As the product feature size departs from its basic size in different products, the gaging element size varies. Therefore, to inspect all possible values of product feature size within the size tolerance zone, an infinite range of gage element sizes would be required. This difficulty is overcome by using a gage with adjustable gage element sizes. Thus RFS gages are characterized by adjustable expanding devices, tapered pins, V blocks, spring-loaded devices, and dial indicators. These adjustable devices also facilitate the periodic adjustment for gage wear.

Downloaded from http://www.everyspec.com

The main advantage of the RFS gage is that in addition to checking conformance of the product with drawings, the dial indicators usually used in RFS gages also indicate the magnitude and direction of errors. Identification of the magnitude and direction of errors facilitates production control. Because adjustment for wear is an inherent part of RFS gage design, recalibration is relatively easy.

One disadvantage of the RFS gage is the need for a gage-centering device. Another is that locating the center of a datum feature in each setup requires a great deal of operator skill and is difficult unless the feature is of perfect form. Additionally, to accommodate products with different finished feature sizes, either a series of gages or a gage with interchangeable gaging elements of different dimensions is required. Finally, due to the incorporation of wear adjustments and the existence of moving parts, this type of gage requires more frequent calibration surveillance. These disadvantages make RFS gages expensive to build, time-consuming to operate, and prone to operator error.

In true position gage design the design of the gage element for a datum feature involves slightly different treatment than that for other features. The actual design method is discussed within the step-by-step gage design procedure in subsequent paragraphs, but at this point it is important to introduce the concept of fit allowance. A fit allowance is a special allowance applied to MMC or LMC gaging elements for datum features to prevent interference between the gage element and product feature. Interference can occur if both the gage element and product datum feature are produced at exactly their MMC (LMC in case of LMC tolerancing sizes). The design method referenced is just one type that provides a practical method of gaging. Other procedures—fit fit allowance and slide fit allowance—may be considered.

Because many true position gages are manufactured with press- or slide-fitting gage elements, namely, pins or bushings in predrilled holes, additional gage manufacturing tolerances are required. These tolerances are required to allow for variations in positioning of the gaging elements and runout of the gage datum element. The procedure for including the fit allowance and additional tolerance for press-fitting pins or bushings is illustrated in the examples that follow. Special formulas that incorporate these allowances and tolerances have been developed for calculating gage element sizes.

7.7.1 PROGRESSIVE (COAXIAL) PLUG GAGES

True position gages that have successive coaxial plugs of different diameters are known as progressive plug gages. They are used to inspect simultaneously location and form of successive coaxial internal diameters.

7.7.1.1 Design of Progressive (Coaxial) Plug Gages

These gages are similar to plug gages except that there is a succession of coaxial plugs of different diameters on the same end of the gage. The steps in a general design procedure for a progressive plug gage follow:

1. *Identify Required Gages.* The progressive (coaxial) plug gage will check the positional and form requirements of the product. For complete inspection of the product, the feature sizes must also be checked. It is in this step that all the necessary gages for complete product inspection are listed.

2. *Configure the Gage.* Based on the product configuration, the coaxial location of each plug in the gage can be determined. The gage configuration must satisfy the following requirements:

   a. The gage must contact the appropriate datum features.

   b. The gage must have a means of verifying the contact between the gage and product features.

   c. The gage elements must be located at the basic product feature locations.

   d. The lengths of gaging elements must meet the depth requirements of product features.

3. *Select Material of Construction.* Usually hardened tool steel is used for the gaging elements. Other materials can be substituted for special requirements such as higher wear resistance, weight reduction, or cost reduction. Materials for nongaging elements should be selected from Table 7-4.

4. *Calculate Gage Element Sizes.* The gage elements for the product datum feature and other related features must be calculated as follows:

   a. Gage Element for Product Datum Feature:

   Gage element diameter for datum feature = MMC diameter of product datum feature − 10% of product positional tolerance

Downloaded from http://www.everyspec.com

Size tolerance on gage element for datum feature	=	Value obtained from Table 7-6, Column 2, for gage element diameter and product feature size tolerance, applied plus.

b. Gage Element Diameter for Other Related Features:

Positional tolerance on gage elements for related features	=	5% of positional tolerance on related product features (Round to next higher 0.0001 in.)
Gage element diameter for other related features	=	MMC diameter of related product feature −90% of positional tolerance on related product feature + positional tolerance on related features.
Size tolerance on gage element for related features	=	Value obtained from Table 7-6, Column 2, for related feature diameter and product size tolerance, applied plus.

5. *Calculate Length Requirements and Specify Reliefs, Chamfers, and Corner Radii.* The gaging elements of the progressive gage must be of sufficient length to gage the entire functional depths of product features. Usually the product feature length MMC is specified as gage element length. To avoid interference with obstructions such as fillets, the gages should be provided with reliefs and corner radii. Chamfering of sharp outside edges should be specified to avoid injury to inspectors and others handling the gage.

6. *Design "Go" and "Not Go" Plug Gages for Feature Size Gaging.* The "Go" and "Not Go" gages for each feature should be designed according to the procedures in par. 7.2.2.

7. *Specify Surface Finish and Hardness.* Surface finish values for all gage surfaces should be selected from Tables 7-8 and 7-9 and hardness values from Table 7-10.

8. *Prepare Gage Drawings and/or Specifications.* Gage drawings should be prepared in accordance with Refs. 6, 7, 8, and 9.

7.7.1.2 Example of Progressive (Coaxial) Plug Gage Design

An example of a progressive (coaxial) plug gage design using the step-by-step procedure of par. 7.7.1.1, follows.

7.7.1.2.1 Requirement

Design a progressive (coaxial) plug gage to inspect a product with the configuration that follows.

Product Configuration. Coaxial internal features as shown in Fig. 7-30.

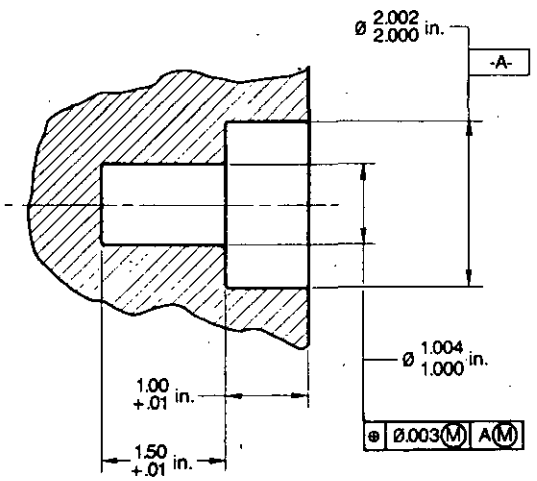

Figure 7-30. Progressive Plug Gage Design Example—Inspection Requirement

Downloaded from http://www.everyspec.com

7.7.1.2.2 Solution

The solution follows:

1. *Identify Required Gages*:

Inspection Requirement	Gages
Feature sizes:	
Datum feature	"Go" and "Not Go" plug
1-in. diameter feature	"Go" and "Not Go" plug
Positions of features	Progressive (coaxial) plug.

2. *Configure the Progressive Plug Gage.* The progressive plug gage must locate on the datum diameter and simultaneously enter the 1.0-in. diameter hole. The appropriate gage will consist of two coaxial plugs appropriately sized and located.

3. *Select Material of Construction.* (from Table 7-4) Tool steel.

4. *Calculate Gage Element Sizes*:

a. Gage Element for Product Datum Feature:

Gage element diameter for datum feature	= MMC size of product datum feature − 10% of product positional tolerance
	= 2.0000 − (0.10)(0.003)
	= 1.9997 in.
Size tolerance on gage element diameter for datum feature (from Table 7-6, Column 2, for 2.000-in. diameter and 0.002-in. tolerance)	= 0.0001 in., applied plus.

A wear allowance of 0.0001 in. (from Table 7-6, Column 1) may be added to the gage element diameter if the inspection quantity justifies its use.

b. Gage Element for Related Feature:

Positional tolerance on gage element for related product feature	= 5% of position tolerance on related product feature (Round to next higher 0.0001 in.)
	= 0.05(0.003)
	= 0.00015 in.
	≈ 0.0002 in.
Gage element diameter for related product feature	= MMC diameter of related product feature − 90% of positional tolerance on related product feature + positional tolerance on gage element for related feature
	= 1.000 − (0.9)(0.003) + 0.0002
	= 1.000 − 0.0027 + 0.0002
	= 0.9975 in.
Size tolerance on gage element diameter for related product feature (from Table 7-6, Column 2, for 1.000-in. diameter and 0.004-in. tolerance)	= 0.0002 in., applied plus.

A wear allowance of 0.0002 in. (from Table 7-6, Column 1) may be added to the gage element diameter if the inspection quantity justifies its use.

5. *Calculate Length Requirements and Specify Reliefs, Chamfers, and Corner Radii.* The length of each gaging element must be equal to the MMC depth of the related product feature, i.e.,

Gage element length for datum feature = 1.0 in.
Gage element length for related feature = 1.5 in.

Downloaded from http://www.everyspec.com

6. *Design "Go" and "Not Go" Plug Gages for Feature Size Gaging.* The following "Go" and "Not Go" gages must be designed according to the step-by-step procedure in par. 7.2:

"Go" and "Not Go" plug gage for datum feature

"Go" and "Not Go" plug gages for related feature.

7. *Specify Surface Finish and Hardness Values.* (from Tables 7-8 and 7-10)

Gage Element	Surface Finish	Hardness
External surface	8 μin.	C60 min (Rockwell).

8. *Prepare Gage Drawings and/or Specifications.* The necessary gage drawing is shown in Fig. 7-31.

7.7.2 RECEIVER GAGES

A true position gage that receives the product external features and verifies the form or positional dimensions of the product features is known as a receiver gage. This gage consists predominantly of internal surfaces or portions of internal surfaces arranged to inspect the interrelationship between two or more external product features. A receiver gage is supplemented by individual basic gages for gaging product feature sizes. During the gaging operation the product feature sizes are gaged before the form or position are gaged.

The configuration of each receiver gage depends entirely on the product configuration. Ideally, the receiver gage should simulate the configuration of the mating part. When a receiver gage is configured in this way and a practical modifier like the MMC callout is applied, the gage assures proper functional assembly of the products. Therefore, a receiver gage designed for an MMC callout and simulating the mating product is also known as a functional gage. A functional gage designed with zero tolerance at MMC also eliminates the need for a separate "Go" gage.

7.7.2.1 Design of a Receiver Gage

Because the receiver gage configuration depends on the product, a gage design procedure cannot be standardized. However, the following general step-by-step design procedure can usually be followed:

1. *Identify Required Gages.* A properly configured receiver gage simultaneously checks form and positional tolerances of product features, but the sizes of these features have to be checked by other types of gages. In this step all the gages required to inspect size, form, and positional tolerance should be identified.

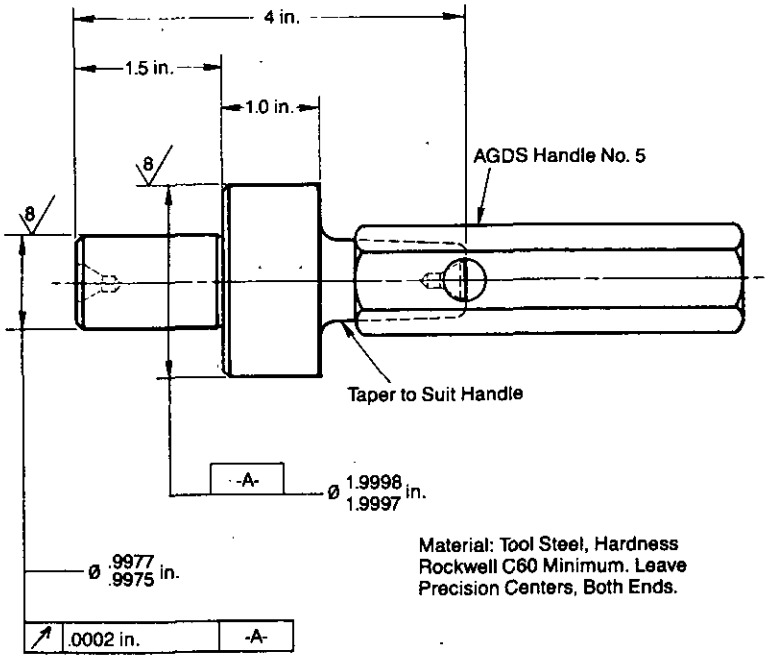

Figure 7-31. Progressive Plug Gage Design Example

Downloaded from http://www.everyspec.com

2. *Configure the Gage.* The designer may use his creativity and experience to configure a gage that meets the following requirements:

a. The gage must contact the appropriate datum feature.

b. The gage must have a means of verifying contact with the datum feature.

c. The gage elements must be located at basic product feature locations.

d. The depths of gaging elements must meet or exceed product length requirements.

3. *Select Material of Construction.* The gaging elements of most receiver gages are made of hardened tool steel. Special considerations, such as need for additional wear resistance, however, may dictate use of harder materials. Table 7-4 may be used as a guide in selecting materials.

4. *Calculate Gage Element Sizes*:

Gage element size is calculated so that it incorporates the combined effect of size and positional or form tolerance. The basic gage element size for the product datum feature is calculated so that accommodation is made for fit allowance and positional tolerance for mounting the gage elements. A wear allowance for each gage element may be obtained from Table 7-6 if the inspection quantity justifies its use. Distribution of the amount of positional tolerance between gage elements depends on the product configuration.

In calculating gage element diameters for other related product features, the size tolerance, positional tolerance, and wear allowance are allocated to the MMC size of each element. This design procedure insures that the products are within specified tolerance limits even when individual features are at MMC. The following relationships are used to calculate the gage element dimensions:

a. Gage Element Diameter for Datum Feature:

Gage element diameter for datum feature	=	MMC size of product datum feature + 10% of the lesser of the positional tolerances on related features
Size tolerance on gage element diameter for datum feature	=	Value obtained from Table 7-6, Column 2, for gage element diameter and product size tolerance, applied minus

b. Gage Element Diameter for Other Related Features:

Positional tolerance on gage elements for related features	=	5% of positional tolerance on related product features. (Round up to next higher 0.0001 in.)
Gage element diameters for related features	=	MMC size of product feature + positional tolerance on related feature − fit allowance applied to gage element diameter for datum − positional tolerance on gage element for related features
Size tolerance on diameters of elements for related features	=	Value obtained from Table 7-6, Column 2, for gage element diameter for related feature and product size tolerance, applied minus.

A wear allowance obtained from Table 7-6, Column 1, may be subtracted from gage element diameters if the inspection quantity justifies their use.

5. *Design "Go" and "Not Go" Ring Gages for Each Feature.* A plug, ring, or snap gage should be designed to gage each male product feature to insure that it is within the size limits. For these gages the design procedures described in pars. 7.2.2, 7.3.2, and 7.4.2 should be followed.

6. *Specify Depth Requirements, Chamfers, and Corner Radii.* The gaging elements of a receiver gage should be long enough to inspect the product feature over the entire functional length of the feature. Accordingly, depth requirements should be specified for the gage elements. Usually the depth of each gaging element is equal to the length of the corresponding product feature at MMC. Corner radii should be provided to avoid interference with any chamfers or fillets on the products being inspected. All sharp edges to which the gage handlers and inspectors may be exposed should be chamfered to avoid injury.

7. *Specify Surface Finish and Hardness.* Surface finish values for all gage surfaces should be selected from Tables 7-8 and 7-9 and hardness values from Table 7-10.

Downloaded from http://www.everyspec.com

8. *Prepare Gage Drawings and/or Specifications.* Because these are special gages, gage drawings should be prepared in accordance with Refs. 6, 7, 8, and 9.

7.7.2.2 Example of Receiver Gage Design

An example of a receiver gage design using the step-by-step procedure of par. 7.7.2.1, follows.

7.7.2.2.1 Requirement

Design a receiver gage to inspect a product with the configuration that follows.

Product Configuration. Coaxial male features as shown in Fig. 7-32.

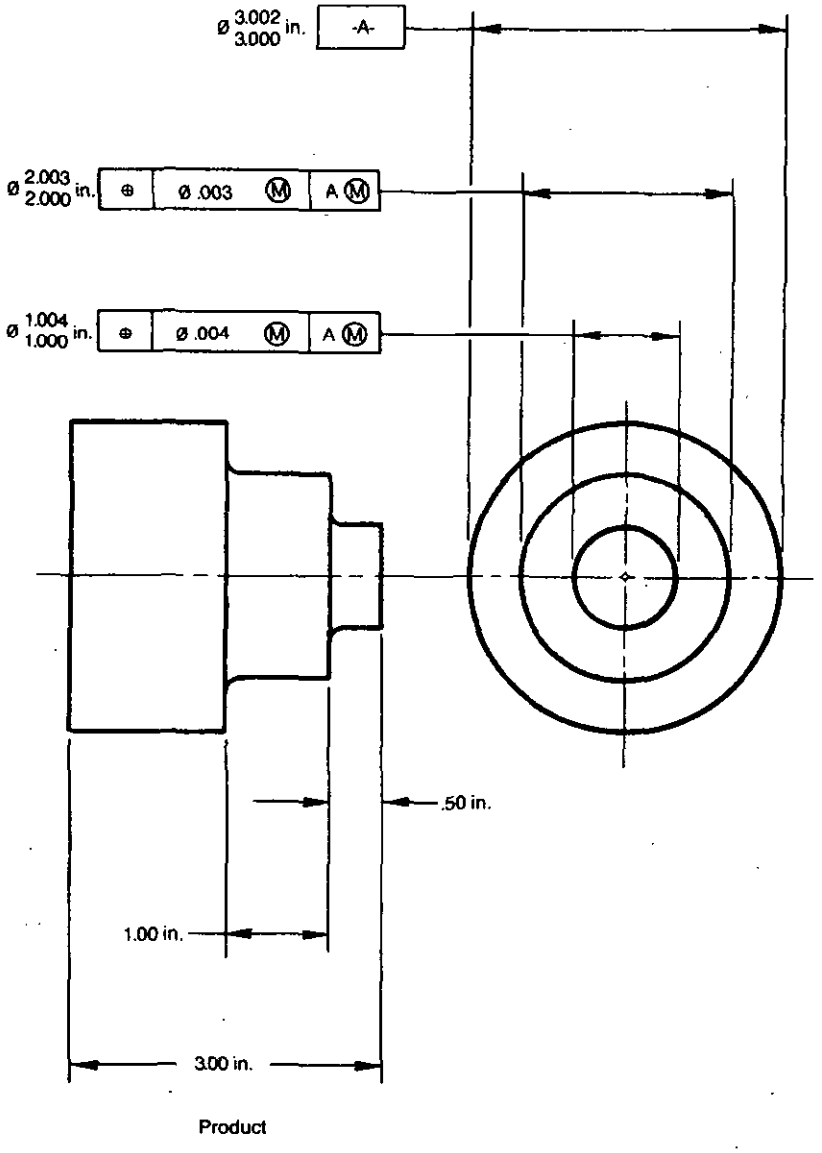

Figure 7-32. Receiver Gage Design Example—Inspection Requirement

Downloaded from http://www.everyspec.com

7.7.2.2.2 Solution

The solution follows:

1. *Identify Required Gages*:

Inspection Requirement	Gages
Feature sizes:	
Datum feature	"Go" and "Not Go" ring gage
2-in. diameter feature	"Go" and "Not Go" ring gage
1-in. diameter feature	"Go" and "Not Go" ring gage
Coaxiality (position) of the three features	Receiver gage.

2. *Configure the Gage*. To gage simultaneously the position of the two features with respect to a datum feature, the gage must have appropriately sized and located female features. Therefore, the gage configuration is a female counterpart of the product.

3. *Select Material of Construction*. (from Table 7-4) Tool steel.

4. *Calculate Gage Element Sizes*:

a. Gage Element Diameter and Tolerance for Datum Feature:

Gage element diameter for datum feature	=	MMC size of product datum feature + 10% of the smaller of the positional tolerances on related features
	=	3.002 + (0.1)(0.003)
	=	3.002 + 0.0003
	=	3.0023 in.
Size tolerance on gage element diameter for datum feature (from Table 7-6, Column 2, for 3.0-in. diameter and 0.002-in. tolerance.)	=	0.0001 in., applied minus.

A wear allowance of 0.0001 in.—from Table 7-6, Column 1—may be subtracted from the the gage element diameter if the inspection quantity justifies its use.

b. Gage Element Diameter for Other Related Features:

(1) Gage Element for 2.0-in. Diameter Feature:

Positional tolerance on gage element for 2.0-in. diameter feature	=	5% of the positional tolerances on related product features (Round to next higher .0001 in.)
	=	0.05(0.003) in.
	=	0.00015 in.
	≈	0.0002 in.
Gage element diameter for 2.0-in. diameter feature	=	MMC size of product feature + 90% of position tolerance on 2.0-in. diameter feature at MMC − positional tolerance on gage element for 2.0-in. diameter feature
	=	2.003 + (0.9)(0.003) − 0.0002
	=	2.003 + 0.0027 − 0.0002
	=	2.0055 in.
Size tolerance on gage element diameter on 2.0-in. feature (from Table 7-6, Column 2, for 2.005 -in. diameter and 0.003-in. tolerance)	=	0.0002 in., applied minus.

A wear allowance of 0.0001 in. (from Table 7-6, Column 1) may be subtracted from this diameter if the inspection quantity justifies its use.

Downloaded from http://www.everyspec.com

(2) Gage Element for 1.0-in. Diameter Feature:

Positional tolerance on gage element for 1.0-in. diameter feature	=	5% of positional tolerance on related product feature
	=	0.05(0.004) in.
	=	0.0002 in.
Gage element diameter for 1.0-in. diameter feature	=	MMC size of product feature + positional tolerance on related feature − fit allowance applied to gage element diameter for datum − positional tolerance on 1.0-in. diameter feature.
	=	1.004 + 0.004 − 0.0003 − 0.0002
	=	1.0075
Size tolerance on gage element diameter on 1.0-in. feature (from Table 7-6, Column 2 for 1.0075-in. diameter and 0.004-in. tolerance)	=	0.0002 in., applied minus.

5. *Design "Go" and "Not Go" Ring Gages for Each Feature.* The required ring gages should be designed according to the step-by-step design procedure in par. 7.3.

6. *Specify Depth Requirements, Chamfers, and Lower Radii.* The depth of each gaging feature must equal the MMC length of product features. Therefore, the depths of gaging features must be as follows:

Datum feature	1.50 in.
2.0-in. diameter feature	1.00 in.
1.0-in. diameter feature	0.50 in.

7. *Specify Surface Finish and Hardness*: (from Tables 7-8, 7-9, and 7-10)

Gage Element	Surface Finish	Hardness
Internal surfaces	8 μin.	C60 min (Rockwell)
External surfaces	Commercial	C60 min (Rockwell).

8. *Prepare Gage Drawings and/or Specifications.* The necessary gage drawing is shown in Fig. 7-33.

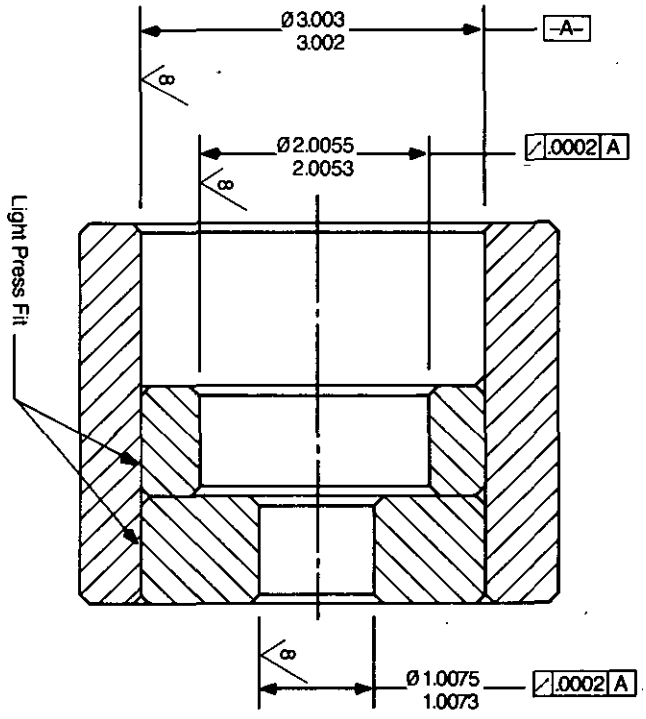

Figure 7-33. Receiver Gage Design Example

Downloaded from http://www.everyspec.com

7.7.3 SPANNER GAGES

A spanner gage is a true position gage designed to check the locations of features such as plain holes, threaded holes, slots, or protrusions when the form or dimensional tolerances are modified by an MMC callout.

When the product includes a positionally toleranced screw thread, special design considerations are required for the screw thread gage element. The design details for such applications are presented in Chapter 8.

There are three categories of true position requirements for which a spanner gage may be appropriate:

1. A pattern of features in which the positions of features are related to each other without involving a datum. This category also includes the case in which the pattern itself, rather than individual features, may be located with respect to a datum.
2. A pattern of two features, one of which is the datum from which the other feature is located
3. A pattern of more than two features in which each feature is located from a datum.

Gaging of the pattern in Category 1 is usually referred to as feature relation gaging. Gaging of the patterns in Categories 2 and 3 is known as feature relation and location gaging. Most feature patterns can be broken down into one or more of these categories to simplify gage design.

7.7.3.1 Types

A spanner gage is classified as male or female, depending on whether it is designed to check the positions of holes or protrusions. This gage may be designed to gage the position of a single feature (hole or protrusion) from a datum feature (datum hole or protrusion), in which case it is known as a two-pin (male) or two-hole (female) spanner gage. If it is designed to gage the positions of several features from a datum feature, a spanner gage is known as either a multiple-pin (male) or a multiple-hole (female) spanner gage.

The male spanner gage consists of a holder into which the pins are secured. The holder is made of soft machine steel to facilitate precise location of the pins; the pins are press fitted in the holder and may or may not have shoulders. Knockout holes are provided in the holders to facilitate removal of the pins, and the tips of the pins are chamfered to facilitate entry into the product holes. Usually pin length is selected based on the hole depth or product thickness. When this length is not limited by the product, however, it is a good practice to have pin length about one and one-half times the pin diameter.

The female spanner gage consists of a plate with suitably located holes with bushings. The use of bushings is optional, but it prolongs gage life because worn-out bushings can be replaced. The plate is made of soft machine steel to facilitate precise location of the bushings in the holes. The inside diameters of the bushings are ground concentric with the outside diameters, and the bushings are press fitted into the plate. The bushings are made of hardened steel and are chamfered to clear any fillet or radius at the base of the product protrusions.

7.7.3.2 Design of a Spanner Gage

A step-by-step design procedure for a spanner gage follows:

1. *Identify Required Gages.* First, study the product drawing to locate the datums and dimensions to be gaged. From this information identify the basic "Go" and "Not Go" gages required for gaging feature sizes. Next, identify the spanner gages required to gage the pattern of holes or protrusions on the product drawing, and configure the gage to inspect as many features as is practical with a single gage. This decision may have to be modified in a later step if the selected configuration makes the manufacture of the spanner gage too difficult.

2. *Configure the Gage.* This is probably the most creative of all phases of gage design. The designer's experience and creativity should play a major role in creating the simplest gage configuration possible that meets the inspection requirement at minimum cost and with the fewest gage manufacturing problems. If the pattern of features is very complex, an effort should be made to separate the component into simpler patterns to simplify the gage configuration. The resulting configuration must satisfy the following requirements:

   a. The gage must contact the appropriate datum features.
   b. Contact between the gage and product datum features must be verifiable.
   c. The gage elements must be located at the basic product feature locations.
   d. The lengths or depths of gaging elements must meet the depth or length requirements of product features.

Downloaded from http://www.everyspec.com

3. *Select Material of Construction.* The following materials are usually specified for various parts of spanner gages:

Spanner Gage Element	Material
Pinholder	Soft machine steel
Plate	Soft machine steel
Pins	Hardened tool steel
Bushings	Hardened tool steel.

Other materials may be selected from Table 7-4 for longer gage life.

4. *Determine Center Distance.* The center distance between gaging pins or holes should be equal to the basic distance between product holes or protrusions. Positional tolerance on this dimension should be 5% of the product positional tolerance.

5. *Calculate Gaging Element (Pin or Bushing) Diameters, Tolerances, and Allowances:*

a. Feature Relation Gaging:

Position tolerance on gage element location = 5% of positional tolerance on product features

(1) For Male Spanner Gages:

Gage pin diameter = MMC diameter of product holes − positional tolerance on product holes at MMC + positional tolerance on gage pins

(2) For Female Spanner Gages:

Gage bushing diameter = MMC diameter of product protrusion + positional tolerance on product protrusion at MMC − positional tolerance on gage bushings

Size tolerance on gage = Value obtained from Table 7-6 for MMC gage element size and its tolerance.

The size and positional tolerances are applied plus to male features and minus to female features. A wear allowance, obtained from Table 7-6, Column 1, may be added to gage pin diameter and subtracted from gage bushing diameter if justified by the inspection quantity.

b. Feature Relation and Location Gaging:

(1) Gage Locating Element for Product Datum Feature:

(a) For Male Spanner Gages:

Gage locating pin diameter feature = MMC size of hole − 10% of positional tolerance on other related product features

(b) For Female Spanner Gages:

Gage locating pin diameter for datum feature = MMC size of protrusion + 10% of positional tolerance on other related product features

Size tolerance on gage locating element = Value obtained from Table 7-6, Column 2, for gage locating element diameter and product tolerance.

The size tolerance should be added to the male elements and subtracted from the female elements of the spanner gage.

(2) Gage Elements for Other Related Product Features:

Positional tolerance on gage elements for other related features = 5% of positional tolerance on other product features (Round to next higher 0.0001 in.).

Gage accuracy is affected by the parallelism of pins and their perpendicularity to adjacent surfaces. Therefore, gage position tolerances must be applied to the full lengths of pins and not just at their origins on a surface. Variations in parallelism and perpendicularity are accounted for in the following relationships for calculating gage element diameters:

Downloaded from http://www.everyspec.com

(a) For Male Spanner Gages:

Gage pin diameters for other related product holes	=	MMC size of other holes − 90% of positional tolerance on product holes at MMC + positional tolerance on gage pins for other related holes

(b) For Female Spanner Gages

Gage bushing diameters for other related product protrusions	=	MMC size of related protrusions + 90% positional tolerance on product protrusions at MMC − positional tolerance on gage bushings for other related protrusions
Size tolerance on gage element diameters	=	Value obtained from Table 7-6, Column 2, for gage element diameter and product tolerance.

This tolerance should be added to the male gage element and subtracted from the female gage element.

6. *Determine Length or Depth Requirements.* The length of gaging pins or depth of gaging bushings must be equal to or slightly greater than the MMC depth of the product hole or the MMC length of product protrusion to which they are to be gaged.

7. *Design "Go" and "Not Go" Gages for Each Feature.* Individual "Go" and "Not Go" gages should be designed for size control of each product feature. Usually the gages will be of the plug type for product holes and of the ring or snap type for product protrusions. The gages should be designed according to the procedures described in pars. 7.2.2, 7.3.2, or 7.4.2.

8. *Specify Surface Finish and Hardness.* Surface finish values for all gage surfaces should be obtained from Tables 7-8 and 7-9 and hardness values from Table 7-10.

9. *Prepare Gage Drawings and/or Specifications.* Because these are special gages, complete gage drawings including component and assembly drawings will be required. These drawings should be prepared in accordance with Refs. 6, 7, 8, and 9.

7.7.3.3 Example of Spanner Gage Design (Two-Pin Gage for Feature Relation Gaging)

An example of a spanner gage design, using the step-by-step procedure of par. 7.7.3.2, follows.

7.7.3.3.1 Requirement

Design a spanner gage to inspect a product with the configuration that follows.

Product Configuration. Two holes involving the feature size and relation dimensions shown in Fig. 7-34.

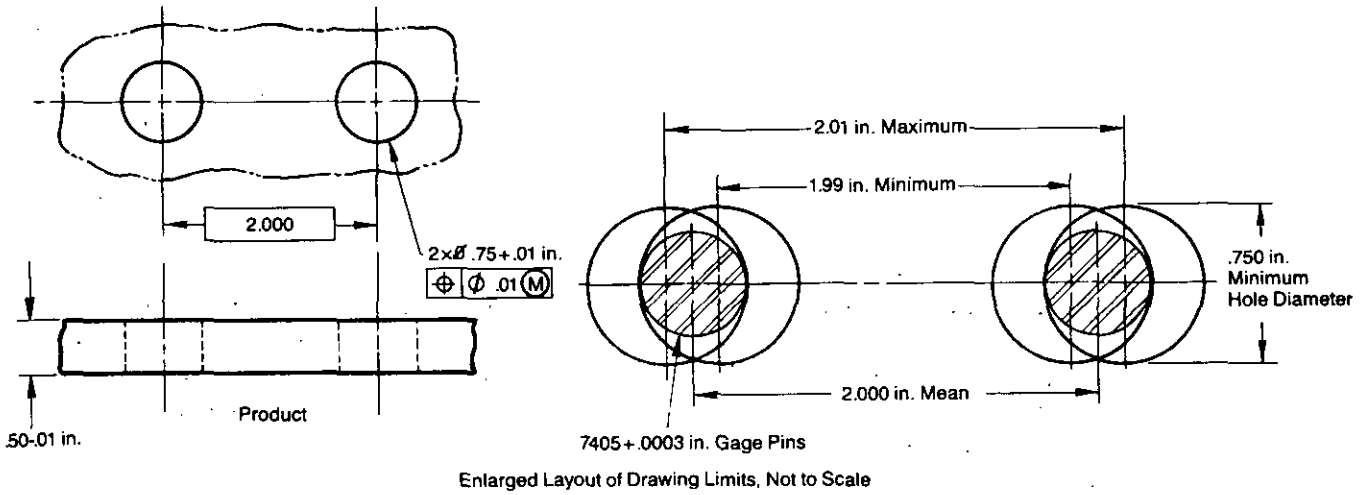

Figure 7-34. Spanner Gage for Feature Relation Gaging Design Example—Inspection Requirement

Downloaded from http://www.everyspec.com

7.7.3.3.2 Solution

The solution follows:

1. *Identify Required Gages.* Complete inspection of the product will entail gaging the two hole sizes and the relation between the holes. Therefore, the following gages are required:

Inspection Requirement	Gages
Hole sizes	"Go" and "Not Go" plug
Relation (position) of holes	Two-pin spanner.

2. *Configure the Gage.* The spanner gage for the product in Fig. 7-35 must have two pins appropriately sized and spaced to check the relation between the holes.

3. *Select Material of Construction:*

Gage Element	Material
Pin holder	Soft machine steel
Pins	Hardened tool steel.

4. *Determine Center Distance:*

Basic center distance between gaging pins = Basic center distance between product features.

5. *Calculate Gaging Element (Pin or Bushing) Diameters, Tolerances and Allowances:*

Positional tolerance on gage pin location = 5% of positional tolerance on product holes
= 0.05(0.01)
= 0.0005 in.

Gage pin diameter = MMC diameter of product holes − positional tolerance on product holes at MMC + positional tolerance on gage pins
= 0.7500 − 0.01 + 0.0005 in.
= 0.7405 in.

Size tolerance on gage pin diameter (from Table 7-6, Column 2, for 0.75-in. diameter and 0.01-in. tolerance) = + 0.0003 in. (applied plus on a male feature)

A wear allowance may be obtained from Table 7-6, Column 1, and added to gage pin diameters if justified by the inspection quantity.

6. *Determine Length or Depth Requirements:*

Length of gage pin > MMC depth of holes
> 0.50 in.
≈ 0.625 in

7. *Design "Go" and "Not Go" Gages for Each Feature.* These plug gages for (0.75 + 0.010)-in. diameter holes must be designed in accordance with par. 7.2.2.

8. *Specify Surface Finish and Hardness:* (from Tables 7-8, 7-9, and 7-10)

	Surface Finish	Hardness
Pins	8 μin.	C60 min
Pin holder	Commercial	Commercial.

9. *Prepare Gage Drawings and/or Specifications.* The necessary gage drawing is shown in Fig. 7-35.

7.7.3.4 Example of Spanner Gage Design (Multiple-Pin Gage for Feature Relation and Location Gaging)

An example of a spanner gage design for multiple-pin feature relation and location gaging, using the step-by-step procedure of par. 7.7.3.2 follows.

7.7.3.4.1 Requirement

Design a spanner gage to inspect a product with the configuration that follows.

Product Configuration. Multiple pins involving feature size, relation, and location dimensions as shown on Fig. 7-36.

Downloaded from http://www.everyspec.com

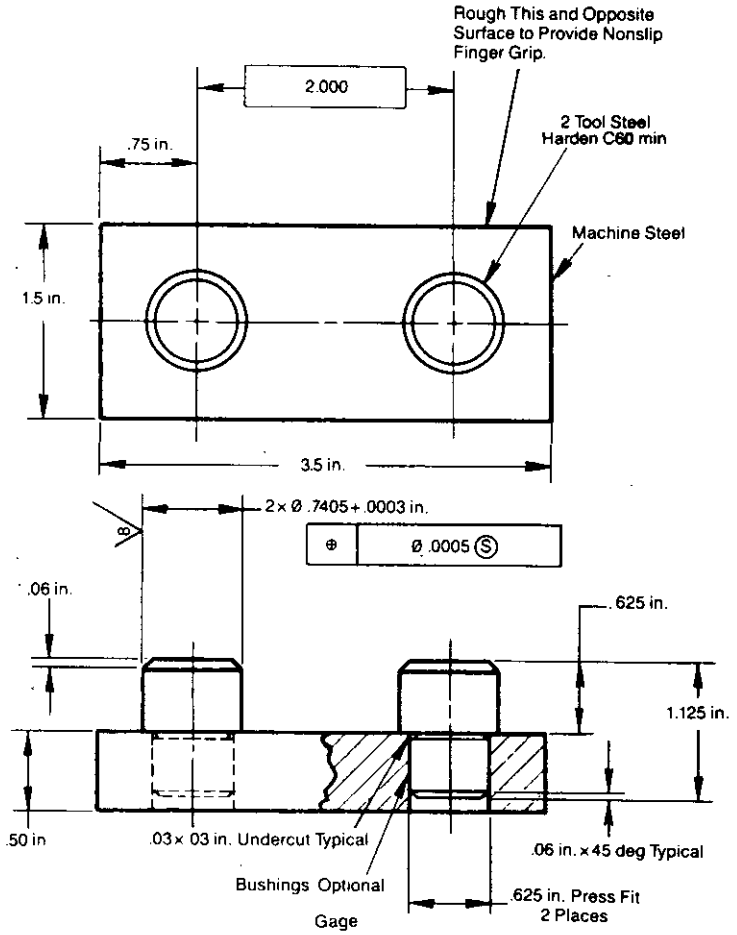

Figure 7-35. Spanner Gage for Feature Relation Gaging Design Example

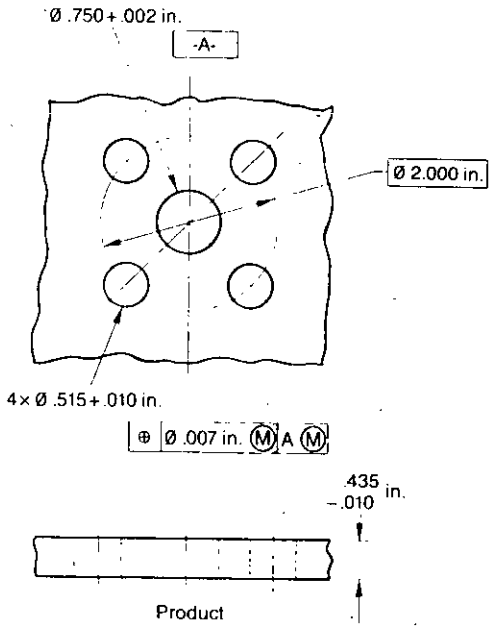

Figure 7-36. Spanner Gage for Feature Relation and Location Gaging Design Example—Inspection Requirement

Downloaded from http://www.everyspec.com

7.7.3.4.2 Solution

The solution follows:

1. *Identify Required Gages.* Complete inspection of the product will involve gaging all the holes for size and their relative locations with respect to the datum. Therefore, the following gages are required:

Inspection Requirement	Gages
Hole sizes	"Go" and "Not Go" plug
Relative location (position) of holes	Multiple-pin spanner.

2. *Configure the Gage.* The spanner gage for the product in Fig. 7-37 must locate in Datum Hole A and have appropriately sized and spaced gaging elements for the other related holes. Therefore, the proper gage configuration is a plate, a locating pin for Datum Hole A, and gaging pins for other related holes.

3. *Select Material of Construction*: (from Step 3 of par. 7.7.3.2)

Gage Element	Material
Pin holder	Soft machine steel
Pins	Hardened tool steel.

4. *Determine Center Distance.* Similar to the product holes, the four gage pins must be equispaced on a circle concentric with the datum hole locating pin. The diameter of this circle is determined as follows:

Diameter of gage pin circle = Basic diameter of product hole circle
= 2.000 in.

5. *Calculate Gaging Element (Pin or Bushing) Diameters, Tolerances, and Allowances*:

a. Datum Hole Locating Pin Diameter:

Gage locating pin diameter for datum hole = (MMC size of hole − 10% of position tolerance on other related holes
= 0.7500 − 0.0007
= 0.7493 in.

Size tolerance on gage locating pin diameter for datum hole (from Table 7-6, Column 2, for 0.7493-in. diameter and 0.002-in. tolerance) = 0.0001 in., applied plus.

b. Gage Pin Diameters and Tolerances for Other Related Holes:

Positional tolerance for gage pins for other related features = 5% of positional tolerance on product holes
= 0.05(0.007) in.
= 0.00035 in.
≈ 0.0004 in.

Gage pin diameter for other related holes = MMC size of holes − 90% of positional tolerance on product holes at MMC + positional tolerance on gage pins for other related holes
= 0.5150 − (0.9)(0.007) + 0.0004
= 0.5091 in.

Size tolerance on gage pin diameter for other related holes (from Table 7-6, Column 2, for diameter 0.515 in. and tolerance 0.010 in.) = 0.0003 in.

A wear allowance may be obtained from Table 7-6, Column 1, and added to the gage pin diameters if justified by the inspection quantity.

Downloaded from http://www.everyspec.com

6. *Determine Length or Depth Requirements*:

Length of gage pins for gaging holes	> hole depth at MMC
	> 0.435 in.
	≈ 0.5 in.

7. *Design "Go" and "Not Go" Gages for Each Feature*. The following plug gages should be designed according to procedure in par. 7.2.2:

a. "Go" and "Not Go" plug gages for 0.750 + 0.002-in. datum hole

b. "Go" and "Not Go" plug gages for 0.515 + 0.010-in. holes.

8. *Specify Surface Finish and Hardness*: (from Tables 7-8, 7-9, and 7-10)

	Surface Finish	Hardness
Gage pins	8 μin.	C60 min (Rockwell)
Other Surfaces	Commercial	Commercial.

9. *Prepare Gage Drawings and/or Specifications*. The necessary gage drawing is shown in Fig. 7-37.

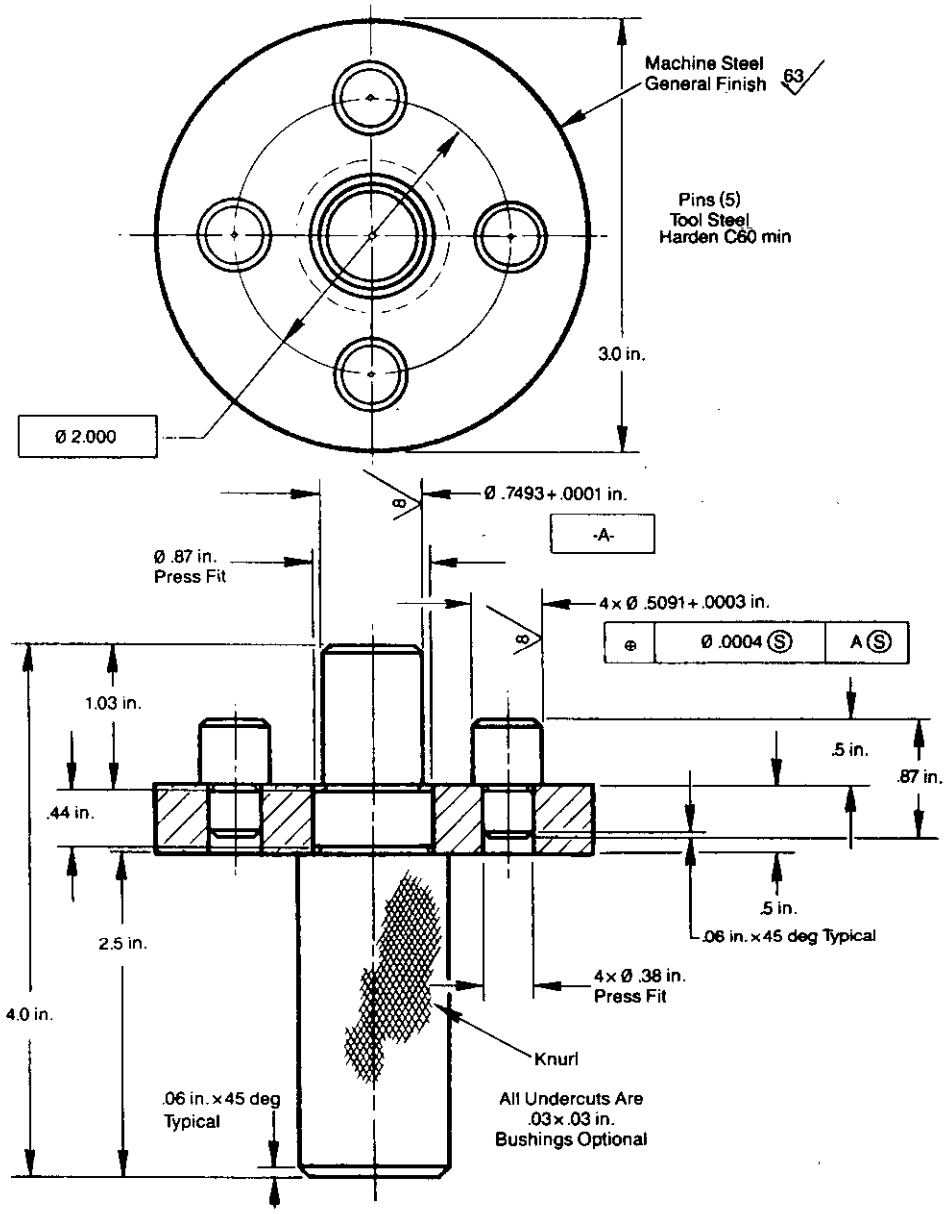

Figure 7-37. Spanner Gage for Feature Relation and Location Gaging Design Example

Downloaded from http://www.everyspec.com

7.7.3.5 Example of an MMC Special True Position Gage Design Involving Datum Reference Frame

An example of an MMC special true position gage design that involves a datum reference frame, i.e., a set of three mutually perpendicular datum planes, using the step-by-step procedure of par. 7.7.3.2, follows.

7.7.3.5.1 Requirement

Design a true position gage to inspect a product with the configuration that follows.

Product Configuration. A hole located from two datum planes that also has a positional requirement with respect to the three datum planes of the reference frame as shown on Fig. 7-38.

7.7.3.5.2 Solution

The solution follows:

1. *Identify Required Gages.* Complete inspection of the product in Fig. 7-38 will reveal that the hole must be gaged for size and for position with respect to the datum reference frame. Therefore, the following gages are required:

Inspection Requirement	Gages
Hole size	"Go" and "Not Go" plug
Relative location (position) of hole	Special true position gage.

2. *Configure the Gage.* The gage for product in Fig. 7-38 must contact Datum Surfaces A, B, and C when checking the location of the hole. Because this involves a three-dimensional setup, it is impossible to have a one-piece gage without a sliding part. A tool-steel block can be used to contact the three datum surfaces. A properly sized hole in the plate perpendicular to the Datum Plane A and an appropriate plug will "Go" through the product hole and gage hole. A properly sized pin and gage hole will indicate acceptance of the product by assembling with the product.

3. *Select Material of Construction*: (from Table 7-4)

Gage Element	Material
Pin	Hardened tool steel
Gage body	Hardened tool steel.

4. *Determine Center Distance*:

Basic distances between gage datum surfaces and gage elements = Basic distances between product datum surfaces and product features.

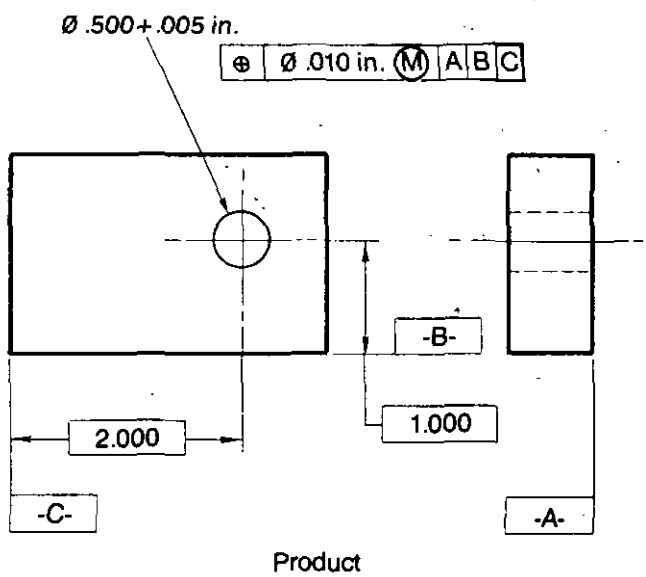

Figure 7-38. MMC Special True Position Gage Design Example—Inspection Requirement

Downloaded from http://www.everyspec.com

Therefore, the gage hole, which is to be located at the same point as the product hole, is located at 1.0 in. from Datum Surface B and 2.0 in. from Datum Surface C.

5. *Calculate Gaging Element (Pin or Bushing) Dimensions, Tolerances, and Allowances*:

Positional tolerance on gage hole	=	5% of positional tolerance on product hole
	=	0.05(0.01)
	=	0.0005 in.
Maximum clearance between plug and gage hole	=	10% of positional tolerance on product hole
	=	0.1(0.01)
	=	0.0010
Tolerance on clearance	=	0.0001 to 0.0002 in. depending on closeness of product requirements
	≈	0.0001 in.
Positional tolerance between portions of plug entering product hole and gage hole	=	0.0001 to 0.0002 in., depending on closeness of product tolerance.
Diameter of plug portion entering product hole	=	MMC diameter of product hole − 90% of position tolerance on product hole + positional tolerance on gage hole + positional tolerance between portions of plug entering product hole and gage hole
	=	0.5000 − 0.9(0.01) + 0.0005 + 0.0001
	=	0.5000 − 0.009 + 0.0005 + 0.0001
	=	0.4916 in.
Size tolerance on diameter of plug portion entering product hole (from Table 7-6, Column 2, for 0.5-in. diameter and 0.005-in. tolerance)	=	0.0002 in., applied plus.

A wear allowance of 0.0003 in.—from Table 7-6, Column 1—may be added to the plug diameter if justified by the inspection quantity.

The gage hole diameter	is	selected arbitrarily to suit, i.e., slightly smaller than plug portion entering product hole
	=	0.4375 in.
Size tolerance on gage hole diameter	is	not applicable because the plug diameter will be adjusted to the actual hole size.
Diameter of plug portion entering gage hole	=	Gage hole diameter − maximum clearance
	=	0.4375 − 0.0010
	=	0.4365 in.

6. *Determine Length or Depth Requirements.* The plug portion entering the product hole must be sufficient in length to enter the product completely. The plug portion entering the gage hole must be slightly longer than the gage plate thickness. The gage plate thickness should be equal in length to the product thickness and be sufficient for a sturdy and stable construction.

7. *Design "Go" and "Not Go" Gages for Each Feature.* "Go" and "Not Go" plug gages must be designed for the product hole according to the procedure in par. 7.2.2.

8. *Specify Surface Finish and Hardness*: (from Tables 7-8, 7-9, and 7-10)

	Surface Finish	Hardness
All gaging surfaces	8 μin.	C60 min (Rockwell)
Other surfaces	Commercial	Commercial.

9. *Prepare Gage Drawings and/or Specifications.* The necessary gage drawing is shown in Fig. 7-39.

Downloaded from http://www.everyspec.com

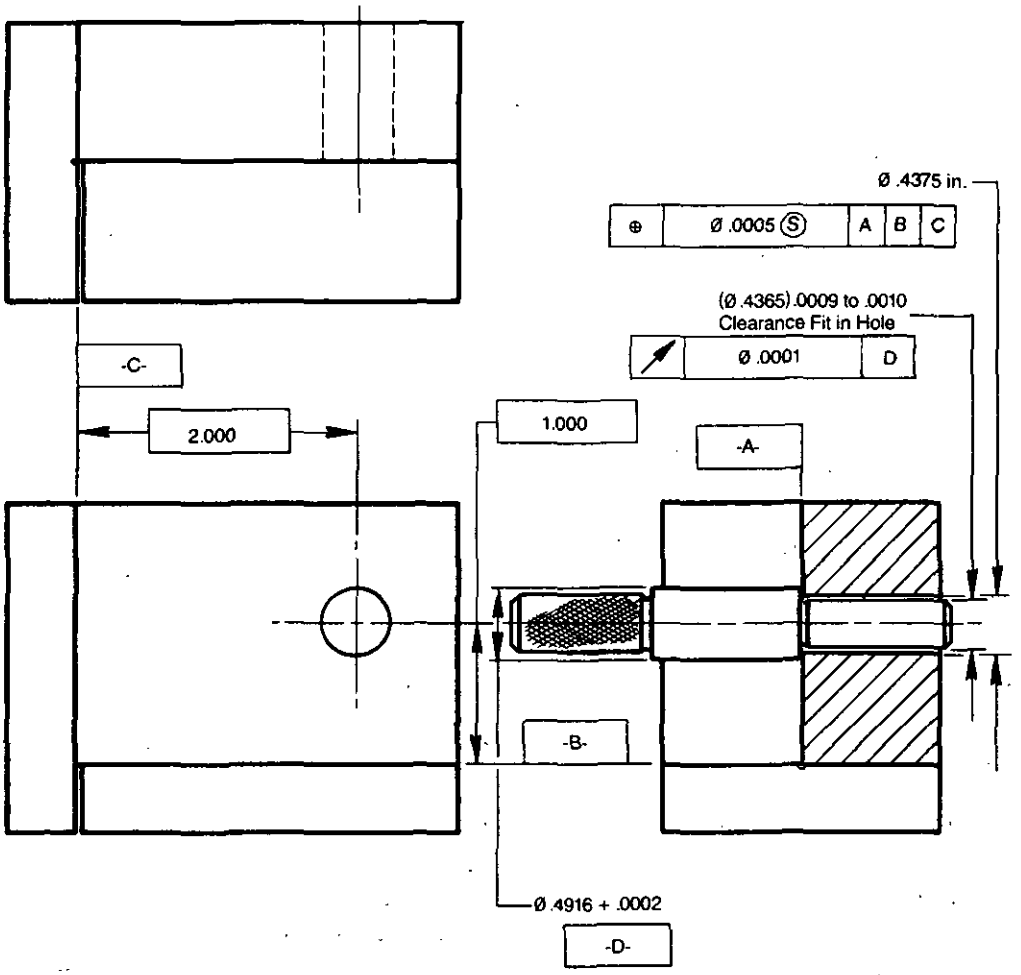

Figure 7-39. MMC Special True Position Gage Design Example

7.7.4 LMC TRUE POSITION GAGES

7.7.4.1 Design of an LMC Special True Position Gage

The step-by-step design procedure for an LMC true position gage is the same as that listed in par. 7.7.3.2 for spanner gages.

7.7.4.2 Example of an LMC Special True Position Gage

7.7.4.2.1 Requirement

Design an LMC true special position gage to inspect a product with the configuration that follows:

Product Configuration. A hole located from two datum planes that also has a positional requirement with respect to the three datum planes of the reference frame as shown on Fig. 7-40.

7.7.4.2.2 Solution

The solution follows:

1. *Identify Required Gages.* Complete inspection of the product in Fig. 7-40 will reveal that the hole must be gaged for size and for position with respect to the datum reference frame. Therefore, the following gages are required:

Inspection Requirement	Gages
Hole size	"Go" and "Not Go" plug
Relative location (position) of hole	Special true position gage.

Downloaded from http://www.everyspec.com

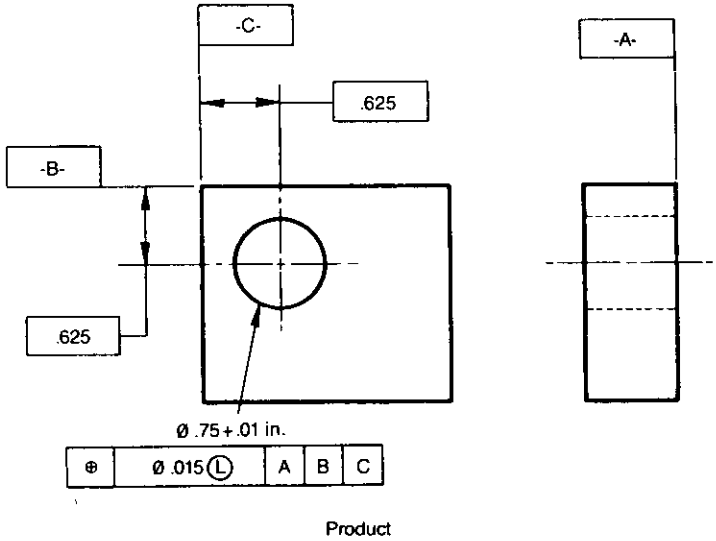

Figure 7-40. LMC Special True Position Gage Design Example—Inspection Requirement

2. *Configure the Gage*. The gage for the product in Fig. 7-40 must contact Datum Surfaces A, B, and C when checking the location of the hole. Because this involves a three-dimensional setup, it is impossible to have a one-piece gage. Tool-steel blocks can be used to contact the three datum surfaces. A properly sized post in the plate perpendicular to Datum Plane A and an appropriate plug will "Not Go" through the product hole and gage post. A properly sized plug will indicate acceptance of the product by not assembling with the product.

3. *Select Material of Construction*: (from Table 7-4)

Gage Element	Material
Pin and post	Hardened tool steel
Gage body	Hardened tool steel.

4. *Determine Center Distance*:

Basic distances between gage datum surfaces and gage elements = Basic distances between product datum surfaces and product features.

Therefore, the gage post, which is to be located at the same point as the product hole, is located at 0.625 in. from Datum Surface B and 0.625 in. from Datum Surface C.

5. *Calculate Gaging Element (Pin or Bushing) Dimensions, Tolerances, and Allowances*:

Diameter of "Not Go" plug	= selected arbitrarily to suit
	= 0.12500 in.
Tolerance on "Not Go" plug (size tolerance on product hole from Table 7-6, Column 2, for 0.75-in. diameter and 0.01-in. tolerance)	= 50% of size tolerance on product hole
	= 0.5(0.0003)
	= 0.00015 in., applied minus
Positional tolerance on gage post	= 5% of positional tolerance on product hole
	= 0.05(0.015)
	= 0.00075
	≈ 0.0008 in.
Diameter of gage post	= LMC diameter of product hole + positional tolerance on product − positional tolerance on gage post − 2 ("Not Go" plug diameter)
	= 0.76 + 0.015 − 0.0008 − 2(0.125)
	= 0.52420 in.
Tolerance on post	= same as tolerance on "Not Go" plug
	= 0.00015 in., applied minus.

Downloaded from http://www.everyspec.com

6. *Determine Length or Depth Requirements.* The post portion entering the product hole must be sufficient in length to enter the product completely. The gage plate thickness should be sufficient for a sturdy and stable construction.

7. *Design "Go" and "Not Go" Gages for Each Feature.* "Go" and "Not Go" plug gages must be designed for the product hole according to the procedure in par. 7.2.2.

8. *Specify Surface Finish and Hardness*: (from Tables 7-8, 7-9, and 7-10)

	Surface Finish	Hardness
All gaging surfaces	8 μin.	C60 min (Rockwell)
Other surfaces	Commercial	Commercial.

9. *Prepare Gage Drawings and/or Specifications.* The necessary gage drawing is shown in Fig. 7-41.

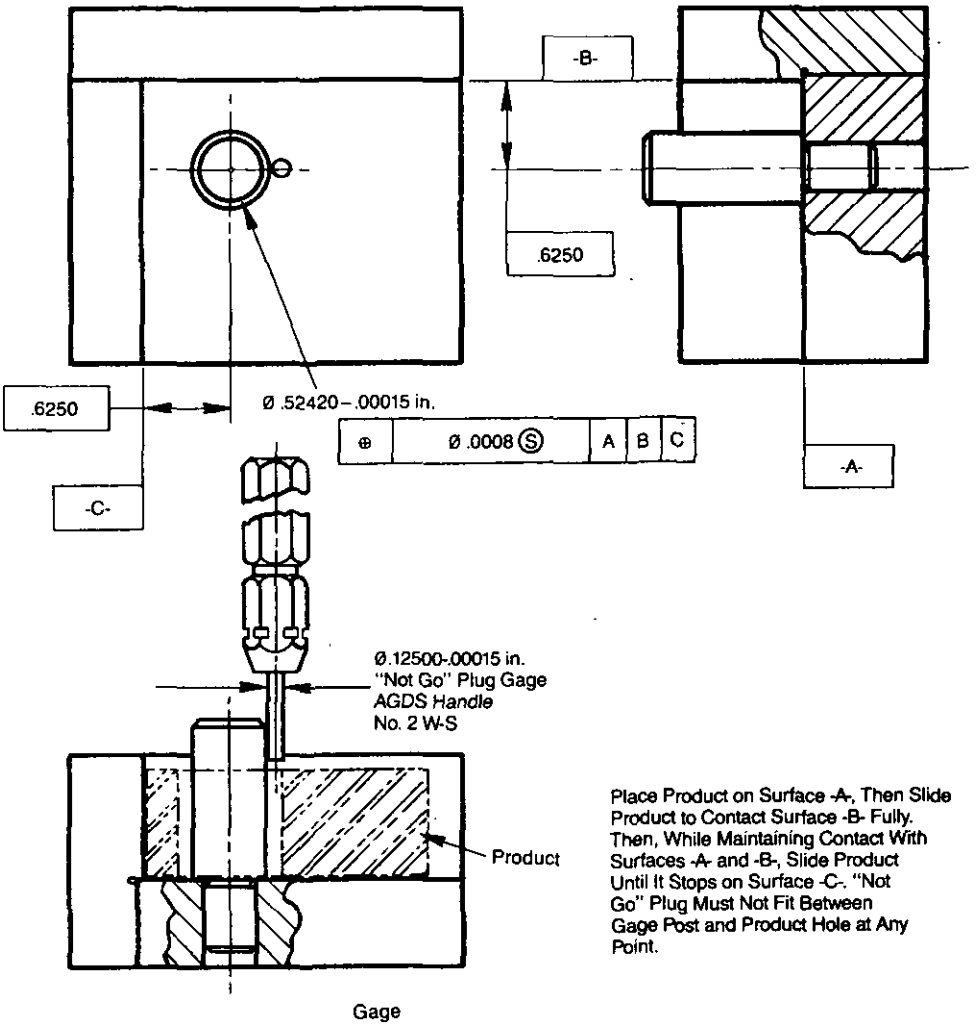

Figure 7-41. LMC Special True Position Gage Design Example

Downloaded from http://www.everyspec.com

7.8 FIXTURE GAGES

7.8.1 INTRODUCTION

A fixture either holds a product or is held on a product to allow certain operations to be performed. When such a fixture is designed principally to gage the product, it is known as a fixture gage. Such a gage differs from a machining fixture in that it is not designed to withstand the cutting forces exerted by the machine tool.

Staging fixtures are fixtures used with optical projectors or comparators to hold the product in a properly oriented position. Staging fixtures may have sensing and indicating devices to gage product features, e.g., a cavity, that cannot be projected. The principles involved in designing staging fixtures are very similar to those used in fixture gage design.

The design of a fixture gage depends on the product configuration. Therefore, fixture gages are available in a variety of shapes, sizes, and configurations. Because fixture gage design depends on the gage designer's creativity and experience and the availability of a variety of hardware components, fixture gages of various configurations could be designed for the same product. The objectives in choosing a design should be to select the design that is most economical to manufacture and to operate.

In a typical fixture gage application, the main performance requirements are product location, product clamping, and the actual product gaging by indicating and sensing devices. Because of the variety of product configurations and the availability of numerous types of locating and clamping devices, it is not possible to standardize a fixture gage design procedure. The fixture gage performance requirements can be met, however, if the design principles discussed in the paragraphs that follow are applied.

7.8.2 LOCATION

Proper location of the product during inspection is extremely important in determining whether the product meets the desired requirements. A location system consists of surfaces on the product and corresponding contacting surfaces on the fixture supports. A well-designed location system should eliminate any chance of incorrect location and also should restrict product movement.

Good manufacturing practice recommends the identification of a datum reference frame to be used in the manufacture and inspection of a product. Depending on the product function and the manufacturing operations, the datum frame may be established by points, lines, or areas of contact and is indicated by datum target symbols on the drawing. When points are used to establish a datum reference frame, they are known also as pickup points. For proper location the fixture gage should have surfaces that contact the product at the points, lines, or areas that establish the datum reference frame. Proper location usually is accomplished by commercially available locating devices such as dowel pins, buttonhead pins, screws, locating pins, or surfaces. Additionally, the fixture gage may have a foolproofing device that prevents incorrect location.

Foolproofing can be achieved in several different ways. One way is to provide a fouling pin or protrusion that will interfere with the product if it is incorrectly located. Another way includes the use of a product feature such as a flange or a boss to make it impossible to mount improperly.

7.8.3 CLAMPING

The purpose of clamping is to restrict product movement within the fixture. This is achieved by firmly holding the product against the locating devices. In the case of a fixture gage, forces acting on the product are much smaller than those in a machining fixture. Therefore, clamping is only occasionally required on fixture gages.

In designing a clamping device for a fixture, it is essential to anticipate all the forces that may act upon the product and the gage during loading, inspection, and unloading. The major forces on the product in a fixture gage include forces due to its own weight and forces exerted by springs. Clamps must be positioned to exert force only on well-supported or rigid product features. An unsupported feature, such as a cantiliver-type arm, may distort under clamping forces. If it is necessary to clamp on such a feature, the fixture must be designed to support the clamping force and the body of the fixture must be strong enough to endure the reactions to the clamping forces and any other anticipated forces during gaging. The clamp must be designed so that the clamping forces are sufficient to restrain product movement without damaging the product. Also the clamp must be safe to operate and must require minimum operator effort. The design and specification of clamps

Downloaded from http://www.everyspec.com

involve calculations of the size of each member based on the loading and strength requirements. A clamping system built from commercially available hardware is usually the most economical.

There are various types of clamps used with fixtures. According to *Jig and Fixture Design* (Ref. 13), the type of clamp the designer should choose depends on the shape and size of the product, the type of fixture gage being designed, and the type of inspection. The most commonly used clamps are strap or plate clamps, screw clamps, swing clamps, hook clamps, quick-acting clamps, and nonmechanical clamps. Quick-acting clamps use devices such as springs, cams, and toggles to increase the speed of loading and unloading of the product. These clamps include the cam action clamps, wedge clamps, toggle-action clamps, power clamps, chucks, and vises. Nonmechanical clamps include magnetic chucks. All of these clamps are briefly discussed here.

As shown in Fig. 7-42, strap or plate clamps are the simplest. These clamps use the principle of levers to exert a desired clamping force on the product. They can be classified by the type of lever configuration used, depending on the relative positions of the fulcrum, product, and force. All three types of configurations are shown in Fig. 7-43. Another classification of strap clamps is based on either the type of hardware or the clamping motion used. A hinged strap clamp uses hinges, a latch strap clamp uses a latch, and a sliding strap clamp has a sliding member to lock and exert the clamping force.

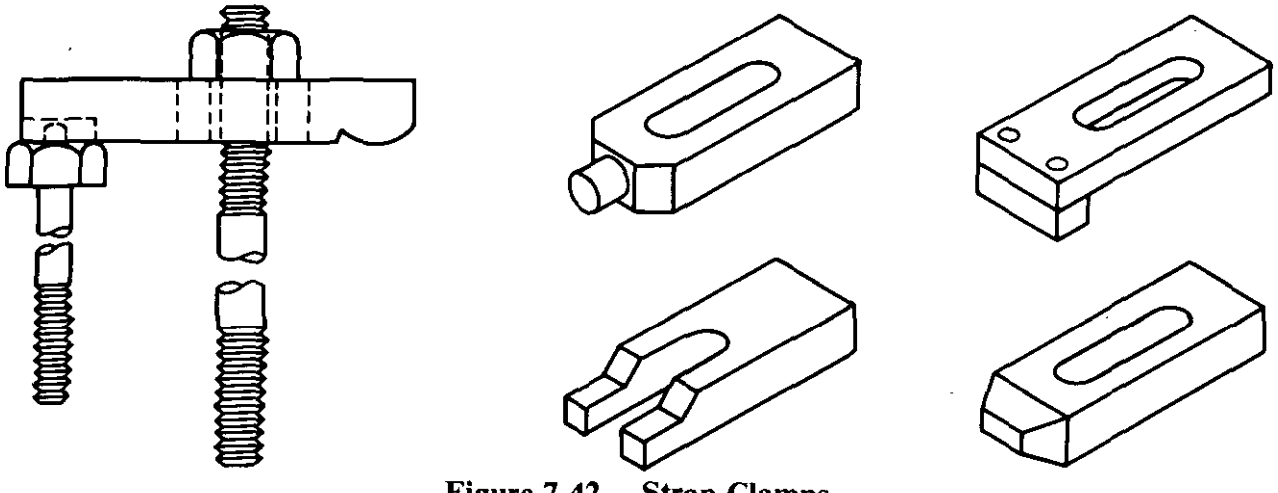

Figure 7-42. Strap Clamps

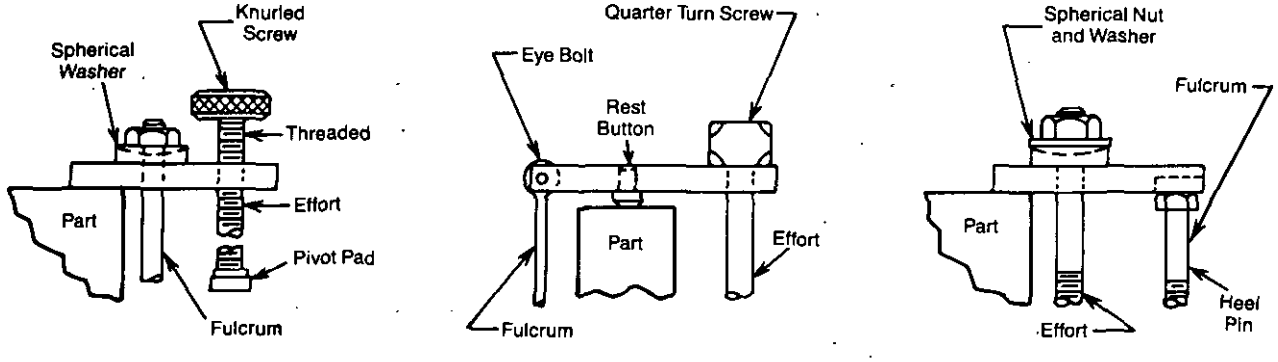

(A) First Class Lever Action (B) Second Class Lever Action (C) Third Class Lever Action

Figure 7-43. Lever Classes of Strap Clamps

Downloaded from http://www.everyspec.com

Screw clamps use screws to provide the torque necessary to exert the clamping force to hold the product in place. The clamping force may be directly or indirectly applied to the product. The screw clamp is versatile, relatively cheap, and simple to incorporate in fixture design. The main disadvantage of a screw clamp is that it is relatively slower in operation than other clamps. Screw clamps combined with other devices are commercially available, and combination with other devices enhances its advantages and reduces its disadvantage. Swing clamps and hook clamps are examples of screw clamps combined with other devices.

A swing clamp shown in Fig. 7-44 is a screw clamp with a pivoting arm. The arm pivots on its mounting stand, and the screw provides the clamping force. The swing arm also facilitates quick movement to and away from the product. A hook clamp, a variation of which is shown in Fig. 7-45, is also a variation of a screw clamp on which a hook mounted on the threaded part contacts the product and applies the clamping pressure. Hook clamps are much smaller than other screw clamps and are most commonly used when, due either to space restriction or product configuration, several small clamps have to be used instead of a single large one.

Another category of clamp that is widely used in mass production is the quick-acting clamp. This type of clamp is equipped with hardware that facilitates quick clamping or release of the product. Such clamps may have quick-acting knobs, cams, wedging parts, and/or toggles. The quick-acting knob shown in Fig. 7-46 can be tilted to slide off a stud. For clamping a product the knob is slid on the stud until it contacts the product, tilted to engage the threads, and then tightened.

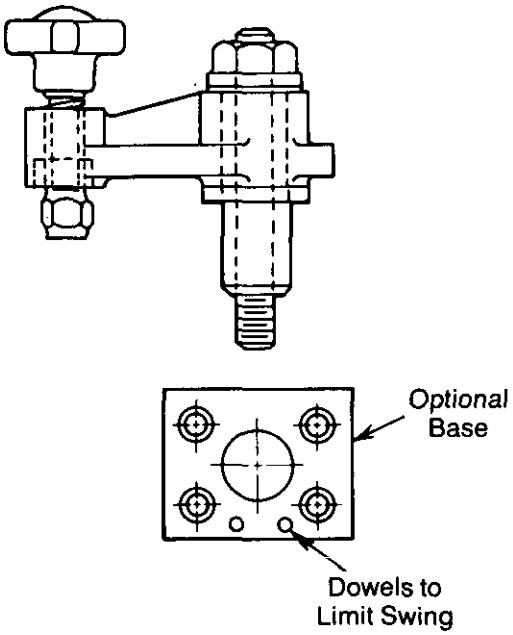

Figure 7-44. Swing Clamp

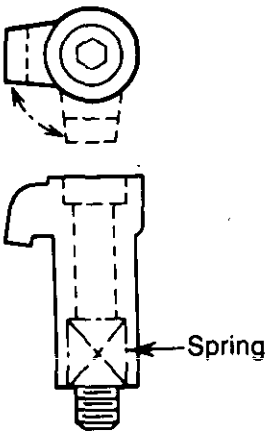

Figure 7-45. Hook Clamp

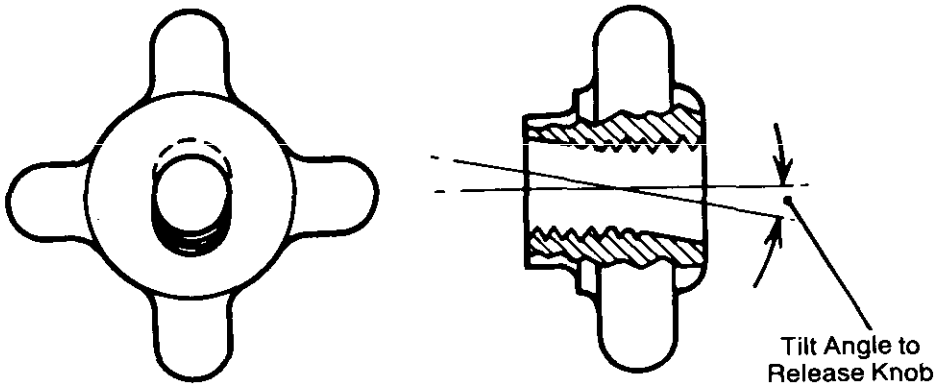

Figure 7-46. Quick-Acting Knob

Downloaded from http://www.everyspec.com

A quick-acting clamp that uses a cam is known as a cam-action clamp, or cam clamp. As Fig. 7-47 illustrates, cam clamps are classified based on the force and type of cam used. The direct cam clamp applies clamping force directly to the product, whereas the indirect cam clamp applies clamping force to a strap that holds the product. The types of cams used in fixture gages can be flat eccentric cams, flat spiral cams, or cylindrical cams.

Flat eccentric cams are simple to manufacture and work in either direction from their center position. The cams lock when they reach the high center position; locking in this position limits the full lock range to a very small area. Any displacement from this small area loosens the clamp; therefore, it does not hold as well as the spiral-type cam clamp. For this reason, the most commonly used cam clamps are the ones with flat spiral cams. These cams have a spiral profile that provides a large locking area. Another type of cam clamp is equipped with a cylindrical cam that activates the clamp by a lobe or through a slot cut into the surface of the cylinder as shown in Fig. 7-47(E).

Another type of quick-acting clamp uses wedge-shaped parts for clamping and is classified based on the type of wedge used. Wedges use the friction between inclined surfaces to provide the clamping force. The wedges can be flat or conical, as shown in Fig. 7-48.

The toggle clamp or toggle-action clamp can be swiftly released and moved away from the product. The four common types of toggle-action clamps are shown in Fig. 7-49. The hold-down clamp, Fig. 7-49(A), holds the product down as shown. The pull-action clamp, Fig. 7-49(B), pulls and locks in the product. The squeeze action toggle clamp, Fig. 7-49(C) applies force on opposite sides of the product to hold it in position. The straight-line toggle clamp, Fig. 7-49(D) applies clamping force in either direction along a straight line. Toggle clamps use a system of levers and pivots. In the locked position the pivots are aligned and, when released, the pivots move in.

For even faster speeds than those of the quick-acting clamps, power-activated clamps are used. They normally operate on hydraulic, pneumatic, or a combined hydropneumatic system. Such systems provide better control of the clamping force and work faster. Another commonly used clamping device, especially for round parts, is a chuck. By modifying the jaws of a chuck, a variety of round products, e.g., stepped shafts, can be accommodated. Vises can be used similarly to clamp round products as well as products with other shapes.

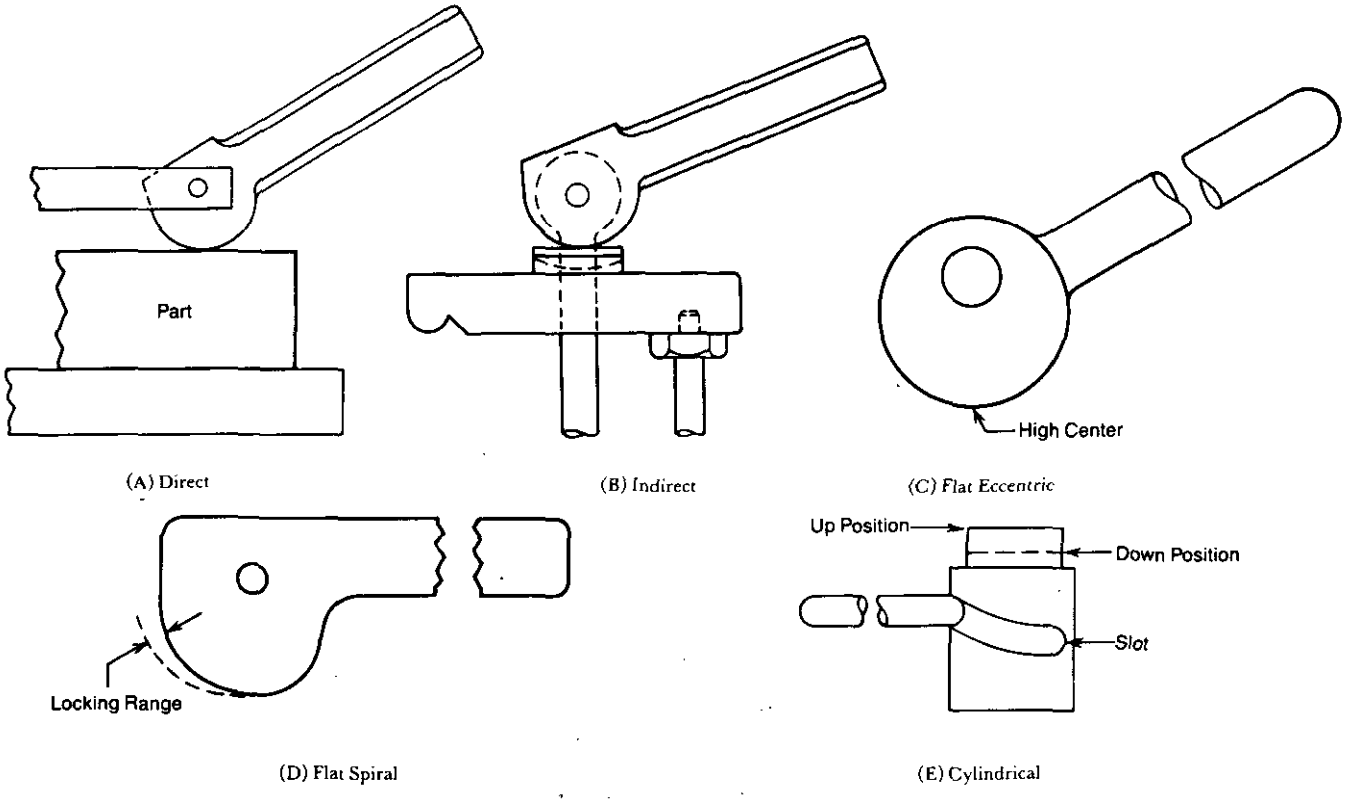

Figure 7-47. Cam Clamps

Downloaded from http://www.everyspec.com

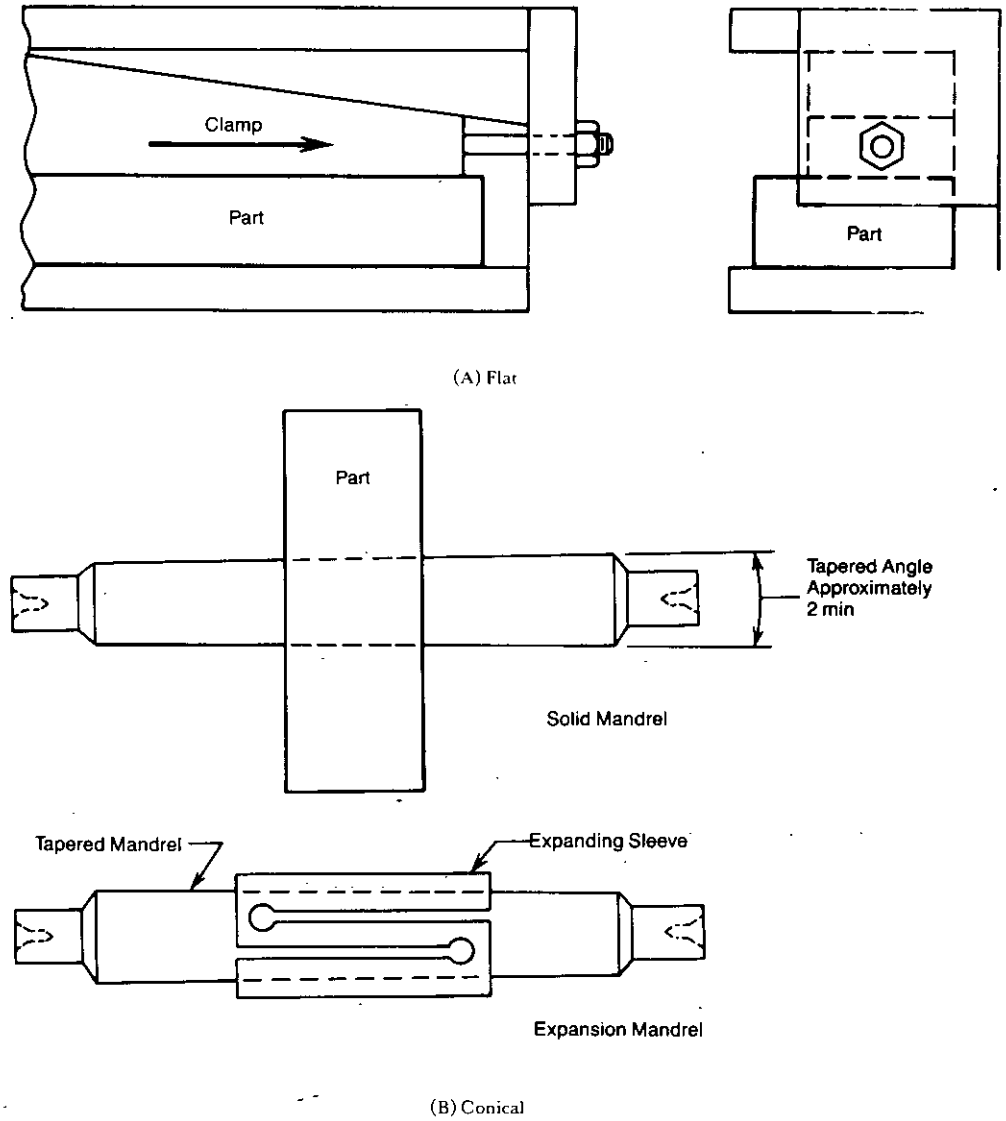

(A) Flat

(B) Conical

Figure 7-48. Wedge Clamps

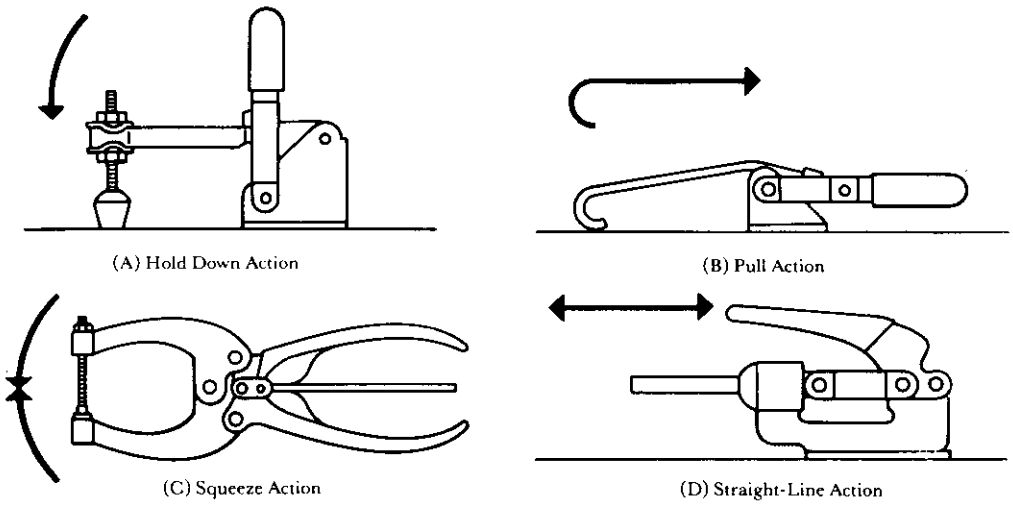

(A) Hold Down Action

(B) Pull Action

(C) Squeeze Action

(D) Straight-Line Action

Figure 7-49. Toggle-Action Clamps

Downloaded from http://www.everyspec.com

When size, shape, or the possibility of distortion of a product do not allow the use of other clamping devices, nonmechanical clamping devices may be used. These devices include magnetic and vacuum chucks. Magnetic chucks use electromagnets to hold ferrous metal products, whereas vacuum chucks are used for nonferrous products. Specially finished surfaces are needed to use the vacuum chucks.

7.8.4 SENSING AND INDICATING DEVICES

Gaging of the product is performed by sensing and indicating devices when the product is mounted in the fixture. A sensing device contacts the surface of the feature to be gaged, and an indicating device indicates any variation from the preset value. The preset value is established by using a master and setting the indicators at their proper values. The most commonly used sensing and indicating devices in fixture gages are dial indicators with probes and the flush-pin-type arrangements used in flush pin gages. These devices are discussed in pars. 3.4.11 and 7.5, respectively.

7.8.5 HARDWARE

A variety of hardware components can be specified in the design of a fixture gage. Commonly used, commercially available hardware components include the following:

1. Bushings (Types H, P, S, F, L, HL)—ANSI B94.33-1962, R1971
2. Locking mechanisms for bushings
3. Wing nuts (Types A, B, C, D)—ANSI B18.17-1968, R1975
4. Star handwheels
5. Wing screws (Types A, B, C, D)
6. Thumb screws (shoulder, regular, wide grip. Type A, B)
7. Clamping screws, screw bushings, and studs
8. Collar head screws
9. Rocking collar screws
10. Shoulder screws
11. Quarter-turn thumb screws
12. Half-turn thumb screws
13. Aligning screw bushings
14. Collar studs
15. Hand nuts
16. Jig screw latches
17. Latch nuts
18. Jig feet
19. Screws for jig feet
20. Springs
21. Spring-loaded plungers
22. Tooling balls for measuring holes
23. Mounting hardware for sensing and indicating devices
24. Knobs
25. Washers
26. Jig buttons
27. Clamps.

7.8.6 DESIGN OF FIXTURE GAGES

Because fixture gage design depends on the product configuration, a gage design procedure cannot be standardized. The following general step-by-step design procedure may be used as a guideline:

1. *Configure the Gage.* Gage configuration depends on the product configuration. The gage designer's creativity and experience should play a major role in creating the simplest possible gage configuration that efficiently meets the inspection requirements at the least cost and that is practical to manufacture. For very complex products it may be necessary to split the inspection requirements among several fixture gages or

Downloaded from http://www.everyspec.com

among fixture gages and other types of gages. The basic principles to be adhered to in configuring the gage are similar to those for true position functional gages, i.e.,

a. The gage must contact the appropriate datum features.
b. The contact between gage and product datum features must be verifiable.
c. The gage elements must be located at the basic product feature locations.
d. If product geometry or weight can create instability, the product should be clamped.
e. Clamps should hold the products at rigid or well-supported features to prevent distortion.

2. *Select Material of Construction.* Depending on the inspection quantity and desired useful life, the gage components subject to wear—such as moving parts and gaging elements—must be made of harder materials, such as hardened tool steel, than nonfunctional parts. Nonfunctional parts can be made of machine steel, mild steel, or—based on the manufacturing process—can be made of cast iron, forged steel, etc.

3. *Calculate Gage Element Sizes*:

The gaging elements must be designed based on the feature dimensions and the tolerancing concept used. Procedures for these calculations are similar to the ones used throughout this chapter for other types of gages.

Depending on the gage configuration, function, and methods of product location and clamping, all the other fixture gage elements should be designed to be structurally sound, durable, and economical. Structurally, the design may have to be evaluated for dynamic as well as static loading, depending on the moving parts in the system. Techniques for analyzing beams and cantilevers, and levers and fulcrums commonly are used in designing machining fixtures. In fixture gage design similar analysis is done but with much lower loads because the cutting forces will be absent.

Gage element length and depth requirements must also be specified to meet the inspection requirements.

4. *Design Other Gages for Features.* For checking features and conditions not checked by the fixture gage, other gages may be required. These gages should be designed in accordance with the appropriate procedures in this handbook.

5. *Specify Surface Finish and Hardness.* A surface finish of 8 to 16 μin. normally is provided on gaging elements. The recommended hardness of these surfaces is C60 minimum on the Rockwell scale. Nonfunctional surfaces may be left with a commercial finish. The sliding and moving surfaces should have appropriate finishes as listed in Tables 7-8 and 7-9 and hardnesses from Table 7-10.

6. *Prepare Gage Drawings.* Gage drawings should be prepared in accordance with Refs. 6, 7, 8 and 9.

7.8.7 Example of Fixture Gage Design

7.8.7.1 Requirement

Design a fixture gage for the product shown in Fig. 7-50.

7.8.7.2 Solution

The solution follows:

1. *Configure the Gage*:

The product is circular in cross section and has a runout requirement. To inspect it for runout, it should be rotated while supported on its datum feature. For this purpose a set of supporting rollers is placed strategically for even weight distribution. A stop roller is provided to locate and prevent lateral movement of the product. The rollers are located by using the product drawing and superimposing the fixture layout.

To check the wall thickness variation, a retractable probe with an indicator is necessary. The arrangement devised has a pivoting arm mounted on a slide. Movement of the contact roller of this arm is indicated by the dial indicator placed at the other end of the arm. After the product is placed in the fixture gage, the pivot arm is slid into position and the thickness can be checked at various points on the internal surface. A position pointer that moves along the gage base indicates the position of the contact roller inside the product. A lock screw allows rigid locking of the slide. Other indicators are placed at the appropriate points to check the runout requirements of the product.

Downloaded from http://www.everyspec.com

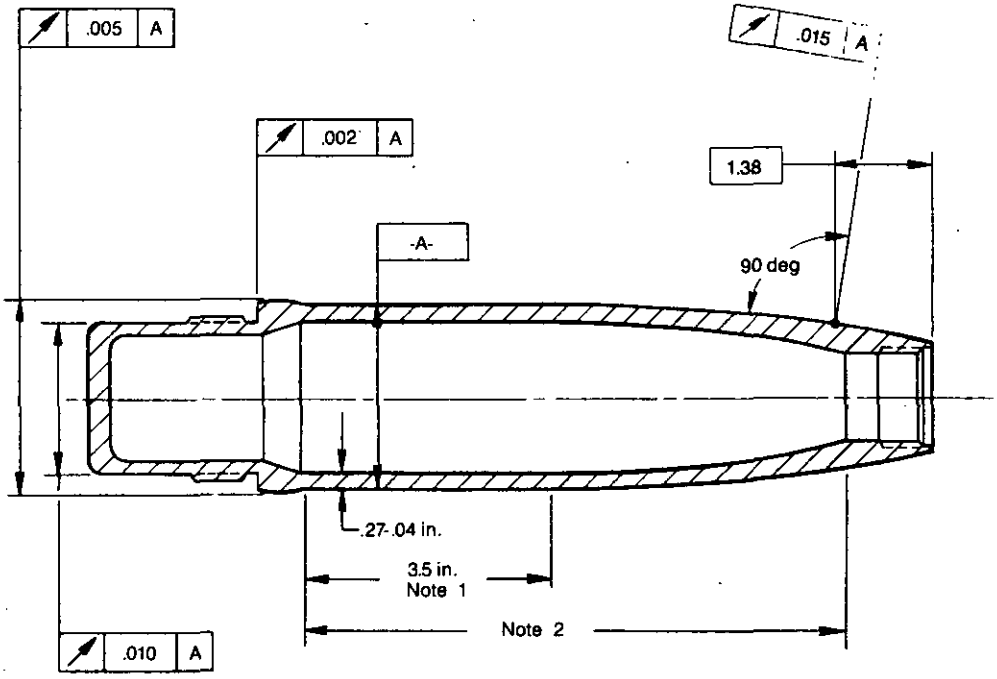

Notes: 1. Wall Thickness .27-.04 in. Applies in This Area.
2. Variation in Wall Thickness in Any Plane Perpendicular to the Longitudinal Axis Shall Not Exceed .030 in. in This Area.

REQUIREMENTS
1. Runout of Forward Outside Diameter (Ogive) With Body Outside Diameter
2. Runout of Bourrelet With Body Outside Diameter
3. Runout of Outside Diameter at Rear of Thread With Body Outside Diameter
4. Runout of Motor Body Seat With Body Outside Diameter
5. Wall Thickness
6. Wall Thickness Variation.

Figure 7-50. Fixture Gage Design Example—Inspection Requirement

The supporting rollers, stop rollers, pivoting arm, and dial indicators are mounted on a common base plate.

2. *Select Material of Construction.* Fabrication of the fixture gage base from mild steel plates seems to be the appropriate manufacturing process. Based on this manufacturing method and the functions of each part, the following materials are selected:

Part	Material
Contact roller	Tool steel
Support roller	Tool steel
Stop roller	Tool steel
Pivoting arm	Mild steel
Base plate	Mild steel
Supporting structure for rollers	Mild steel.

3. *Calculate Gage Element Sizes.* The smaller the supporting roller diameters, the earlier the rollers will wear out. Too large rollers will be expensive and unwieldy. Therefore, an appropriate diameter is selected. The pin of each roller should be strong enough to support its proportion of the product weight. The base plate, supporting structures for rollers, and dial indicators are sized for proportion and checked for strength.

4. *Design Other Gages for Features.* Gages are required for checking size and taper at different points on the product and should be designed in accordance with the appropriate procedures in this handbook.

Downloaded from http://www.everyspec.com

5. *Specify Surface Finish and Hardness.* The following surface finish and hardness values should be specified on the gage:

	Surface Finish	Hardness
Roller surfaces	16 μin.	C60 min
Base plate and other supporting structures	Commercial	Commercial.

6. *Prepare Gage Drawings.* The necessary gage drawing is shown in Fig. 7-51.

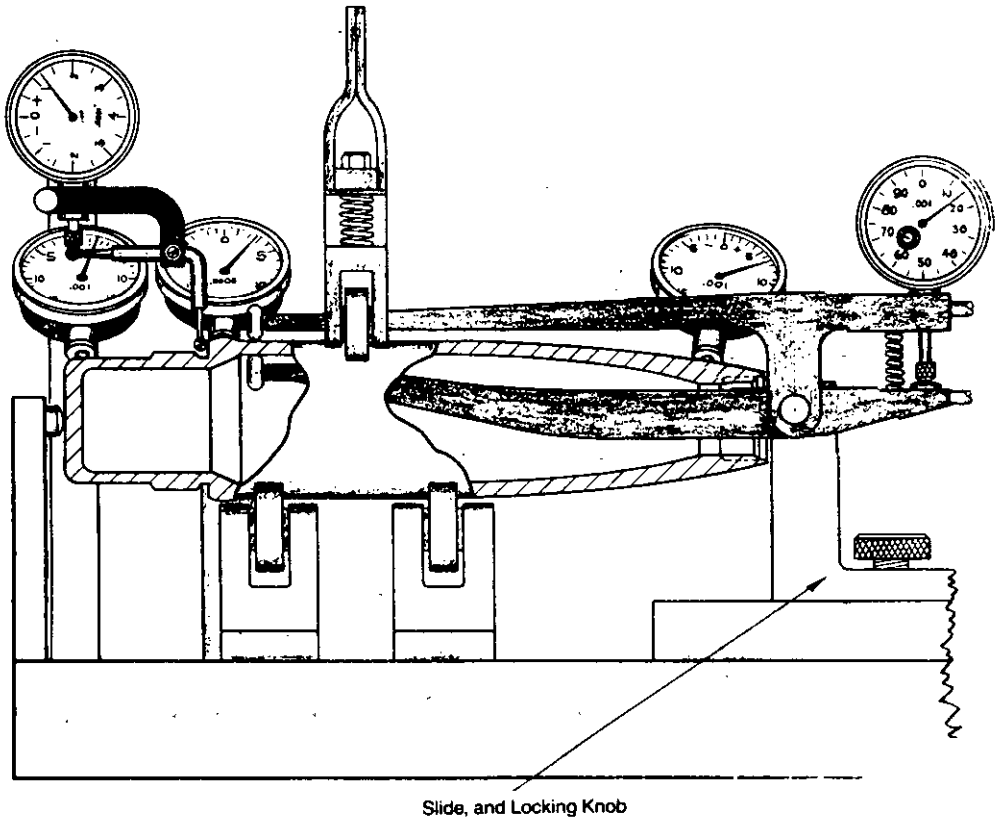

Figure 7-51. Fixture Gage Design Example

Downloaded from http://www.everyspec.com

REFERENCES

1. ANSI B 47.1-1981, *Gage Blanks*, American National Standard, The American Society of Mechanical Engineers, New York, NY, 1981.
2. MIL-STD-110A, *Gages, Plug, Plain, Cylindrical, Go*, 1955.
3. MIL-STD-111A, *Gages, Plug, Plain, Cylindrical, Not Go*, 1955.
4. L. C. Michelon, *Industrial Inspection Methods*, Harper and Brothers Publishers, New York, NY, 1950.
5. *Gage Design Manual for Ordnance Material*, Ordnance Department, Army Service Forces, Washington, DC 1945.
6. DOD-STD-100C, *Engineering Drawing Practices*, 1983.
7. DOD-D-1000B, *Drawings, Engineering and Associated Lists*, 1983.
8. ANSI Y 14.5M-1982, *Dimensioning and Tolerancing*, American National Standard, Engineering Drawings and Related Documentation Practices, American Society of Mechanical Enginners, New York, NY 1982.
9. MIL-G-10944B, *Gages, Dimensional Control*, 12 October 1965.
10. MIL-STD-112A, *Gages, Ring, Plain, Go*, 1955.
11. MIL-STD-113, *Gages, Gages, Plain, Not Go*, 1955.
12. MIL-STD-118, *Gages, Snap Plain Adjustable*, 1953.
13. E. G. Hoffman, *Jig and Fixture Design*, Delmar Publishers, Albany, NY, 1980.

BIBLIOGRAPHY

C. W. Kennedy, and D. E. Andrews, *Inspection and Gaging*, Fifth Edition, Industrial Press, Inc., New York, NY, 1977.

E. Oberg, F. D. Jones, H. L. Horton, and P. B. Schubert, Eds., *Machinery's Handbook*, 21st Edition, Industrial Press, Inc., New York, NY, 1980.

F. T. Farago, *Handbook of Dimensional Measurement*, Industrial Press Inc., New York, NY, 1968.

E. S. Roth, Ed., *Gaging: Practical Design and Application*, Society of Manufacturing Engineers, Dearborn, MI, 1981.

E. S. Roth, *Functional Gaging*, Second Edition (Revised), Society of Manufacturing Engineers, Dearborn, MI, 1970.

Final Acceptance Inspection and Test Equipment (FAITE) Design. Design Policy and Philosophy (Including Supplements A to E). Product Assurance Pamphlet, AMSWE-WE-P-702-105, US Army Weapons Command, Rock Island, IL, 1971.

Downloaded from http://www.everyspec.com

CHAPTER 8
GAGES FOR INTERRUPTED DIAMETERS

Products with interrupted diameters include screw threads, splines, keyways, and knurls. This chapter presents references to appropriate standards for screw thread gaging applications and describes gages for splines, keyways, and knurls. A step-by-step design procedure is provided for each type of spline and keyway gage.

8.0 LIST OF SYMBOLS

A = nominal diameter of Woodruff keyslot "Go" and "Not Go" gaging elements, in.
B = nominal width of Woodruff keyslot "Go" and "Not Go" gaging elements, in.
C = diameter of hole for checking maximum slot depths, in.
C_F = form clearance, in.
D = pitch diameter, in.
D_b = diameter of base circle, in.
D_{ch} = diameter to chamfer, in.
D_{Fe} = form diameter, external spline, in.
D_{Fi} = form diameter, internal spline, in.
D_i = minor diameter, internal spline, in.
D_m = diameter of counterbore for checking minimum slot depths, in.
D_o = major diameter, external spline, in.
D_{oG} = rear section major diameter, in.
D_{re} = minor diameter, external spline (root), in.
D_{ri} = major diameter, internal spline (root), in.
d_e = diameter of measuring pin for external spline, in.
d_i = diameter of measuring pin for internal spline, in.
E = distance from perimeter of gaging element to center of mounting hole, in.
F = diameter of hole for mounting Woodruff keyslot "Go" and "Not Go" gaging elements, in.
N = number of teeth, dimensionless
P = diametral pitch, number of spline teeth per inch of pitch diameter, dimensionless
p = circular pitch, in.
p_s = stub pitch, in.
s = actual space width, circular, in.
s_v = effective space width, circular, in.
t = actual tooth thickness, circular, in.
t_v = effective tooth thickness, circular, in.
t_x = actual tooth thickness at XX, circular, in.
t_y = actual tooth thickness at YY, circular, in.
t_z = actual tooth thickness at ZZ, circular, in.
β = chamfer cutting angle, deg
ϕ = pressure angle, deg
ϕ_e = pressure angle at pin center, external spline, deg
ϕ_i = pressure angle at pin center, internal spline, deg
ϕ_{ch} = chamfer pressure angle, deg

Downloaded from http://www.everyspec.com

8.1 INTRODUCTION

Gaging of screw threads involves checking the conformance of various thread elements with their prescribed limits. These thread elements include the major, minor, and pitch diameters; lead; pitch; and thread angle. Most screw thread applications do not require that all of these features be inspected; therefore, the inspection method selected should be based on those features important to the end use. Consideration should be given to such factors as form, fit, function, and fabrication of the threaded product. The cost of inspection should be weighed against the possible costs that result from the uncertainties inherent in each inspection method.

Splines are also included among parts with interrupted diameters. Proper assembly and interchangeability of splines are very important regardless of the end use. "Go" and "Not Go" gages for splines are designed such that, when assembled with the appropriate mating part, they insure that the minimum specified design clearance is maintained and the maximum specified design clearance is never exceeded.

8.2 SCREW THREADS

Table 8-1 presents references to the appropriate sections of Federal Standard H28, *Screw Thread Standards for Federal Services* (Ref. 1), to the military specification MIL-S-8879, *General Specification for Screw Threads, Controlled Radius Root With Increased Minor Diameter* (Ref. 2), and to appropriate American National Standards Institute (ANSI) standards (Refs. 3 through 11). External and internal product screw threads are inspected for dimensional conformance by using those dimensions and tolerances associated with those gages and gaging systems described in the referenced standards documents.

The determination of acceptability of the thread is based upon the system selected (21, 22, or 23) per H28/20 and ANSI B1.3. Specification of a system is required on either the thread callout or the quality assurance documentation. The system specifies the thread characteristics to be measured and the inspection method.

8.3 SPLINES

A machine element that has integral longitudinal keys, teeth, or keyway spaces equally spaced around a circle or a segment of a circle is known as a spline. Fig. 8-1 illustrates spline terms, symbols, and drawing data. Splines are classified based on their tooth profiles. The two basic types of splines are the involute and the straight sided (also known as parallel sided). Involute splines include splines with pressure angles of 30, 37.5, and 45 deg. Splines are also classified based on their fit, namely, side fit and major diameter fit. The mating side fit splines contact each other only on the sides of teeth. The sides of the teeth transmit motion and also act as centralizers. Within the side fit class there are two subclasses, i.e., flat root side fit and fillet root side fit. The mating major diameter fit splines contact the major diameter for centralizing in addition to contacting the sides of teeth. For more information about the construction, design details, and dimensions, refer to the ANSI B92.1, *Involute Splines, Serrations and Inspection* (Ref. 12).

TABLE 8-1. PRODUCT SCREW THREADS REFERENCE DOCUMENTS

Subject	Federal Standard	ANSI/ASME Standard
Nomenclature, Definition, and Letter Symbols for Screw Threads	H28/1A	B1.7M
Unified Inch Screw Threads-UN and UNR Thread Forms	H28/2A	B1.1
Unified Inch Screw Thread-UNJ Thread Form	MIL-S-8879A	B1.15
Gages and Gaging for Unified Inch Screw Threads	H28/6A	B1.2
Inspection Methods for Acceptability of UN, UNR, UNJ, M, and MJ Screw Threads	H28/20	B1.3
Metric Screw Threads M Profile	H28/21B	B1.13M
Metric Screw Threads MJ Profile	H28/21B	B1.21M
Gages and Gaging for Metric M Screw Threads	H28/22	B1.16M
Gages and Gaging for Metric MJ Screw Threads	H28/22	B1.22M

Downloaded from http://www.everyspec.com

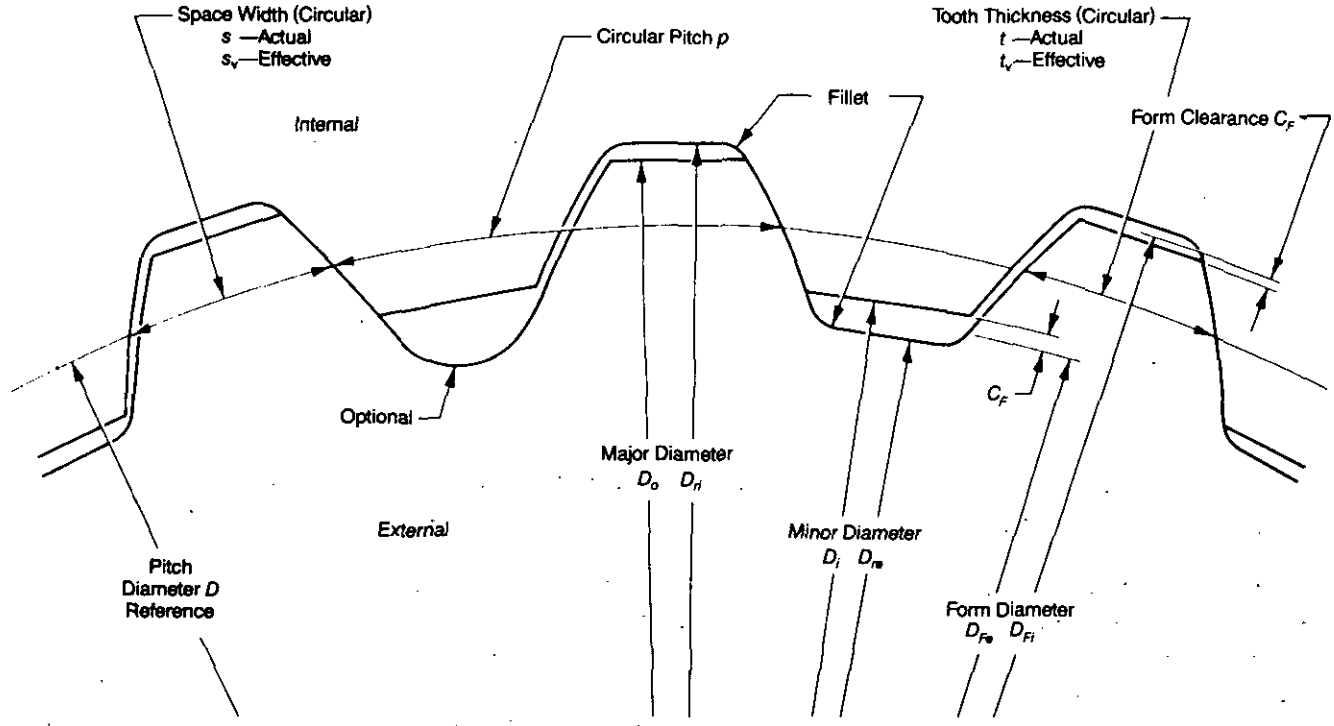

Reprinted with permission © 1970 Society of Automotive Engineers, Inc.

Figure 8-1. Spline Terms, Symbols, and Drawing Data

Inspection of splines can be accomplished in two different ways, i.e., gaging or analytical inspection. Gaging, or inspection by attributes, is used for routine inspection of mass-produced products. Analytical inspection, or inspection by variables, is used to supplement gaging when the actual magnitude of variations in spline dimensions is needed—e.g., to enable tooling adjustments for dimensional control—to reevaluate products rejected by gages, for small production quantities, or to supplement gaging when individual spline elements must be controlled to avoid consumption of the entire tolerance by that one element.

Gages required for spline inspection are spline plug and spline ring gages—these gages are discussed in pars. 8.3.1 and 8.3.2, respectively. They differ from plain plug and ring gages in that they have a full or partial complement of teeth of appropriate dimensions. A spline gage with a full complement of teeth is known as a composite spline gage. A sector spline gage has two diametrically opposite sets of teeth. A sector spline plug gage with only two teeth per sector, as illustrated in Fig. 8-2, is known as a paddle gage. A sector spline ring gage with only two teeth per sector, as illustrated in Fig. 8-3, is known as a snap ring gage. A progressive spline gage has two or more adjacent gage elements that perform different functions. The first element or set of elements may consecutively check first one feature or set of features and then their relationship with other features. The progressive gage may also combine the "Go" and "Not Go" functions of gages.

Three methods of dimensioning splines are common. One is known as the standard method, and the others are known as alternate Method A and Method B. Each of these methods is described in detail in Ref. 12. The spline dimension to be controlled depends on the method of dimensioning. When the standard method is used, the following spline dimensions are controlled:

1. For Internal Splines:
   a. Maximum actual space width
   b. Minimum effective space width
2. For External Splines:
   a. Maximum effective tooth thickness
   b. Minimum actual tooth thickness.

To control these dimensions, "Go" composite and "Not Go" sector gages are required. This combination guarantees the minimum effective clearance and checks the sum of matching tolerance and effective variation.

Downloaded from http://www.everyspec.com

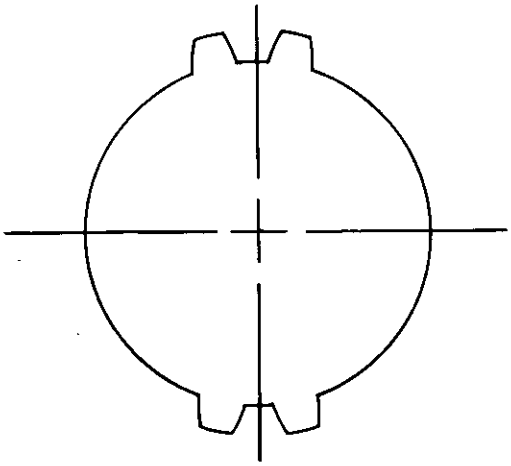

Figure 8-2. Sector Spline Plug Gage With Two Teeth per Sector (Paddle Gage)

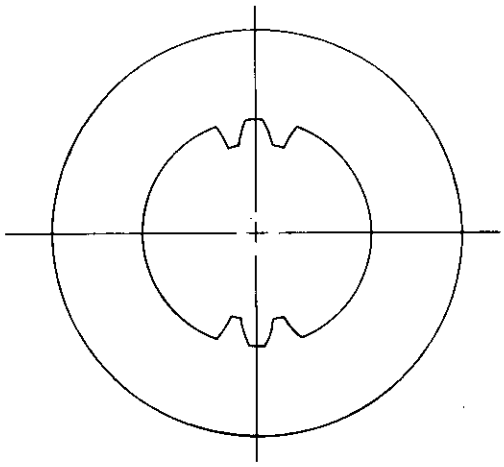

Figure 8-3. Sector Spline Ring Gage With Two Teeth per Sector (Snap Ring Gage)

Alternate Method A requires control of the same dimensions as the standard method. Additionally, this method prevents the increase in maximum effective clearance due to reduction in effective variations. When maximum effective clearance is an assembly requirement but does not require special control, inspection of this clearance is optional.

When the alternate dimensioning Method B is used, both limits of actual space width and actual tooth thickness are marked Reference. In this case the controlled dimensions are as follows:

1. For Internal Splines:
   a. Maximum effective space width
   b. Minimum effective space width
2. For External Splines:
   a. Maximum effective tooth thickness
   b. Minimum effective tooth thickness.

To control these dimensions, "Go" and "Not Go" composite gages are required. These gages check the minimum and maximum effective clearance but not the effective variation. Fig. 8-4 indicates the spline dimensions to be controlled and lists the appropriate gage or inspection procedure.

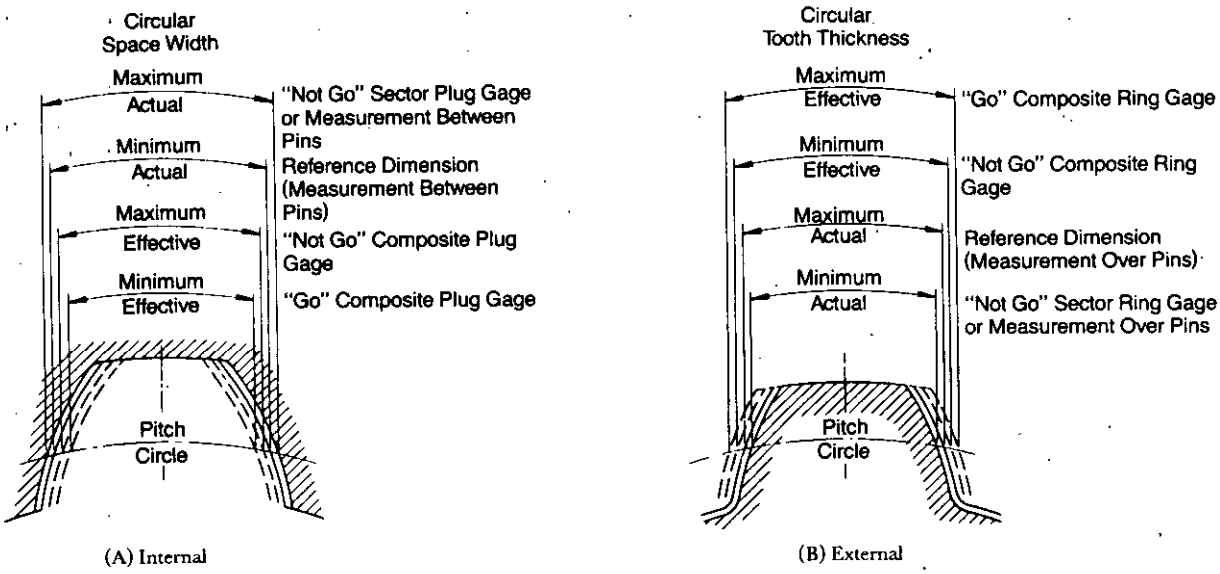

Reprinted with permission © 1970 Society of Automotive Engineers, Inc.

Figure 8-4. Involute Spline Space Width and Tooth Thickness Inspection

Downloaded from http://www.everyspec.com

Usually, the total tolerance and wear allowance on spline gages amount to about 10 to 15% of the product tolerance, but in some instances they can amount to 25% or more. It is recommended that, whenever the total gage tolerance and wear allowance exceed 25% of the product tolerance, the plug gages should be replaced either by tapered tooth plug gages or indicator gages.

8.3.1 SPLINE PLUG GAGES

A spline plug gage is a gage with a full or partial complement of splines of appropriate dimensions for checking internal splines. Descriptions of common types of spline plug gages follow.

8.3.1.1 Types

Spline plug gages are classified based on their construction and the types of splines they gage. Table 8-2 lists the major spline gages for internal splines, their uses, and other information relevant to their selection.

TABLE 8-2. TYPES AND USES OF SPLINE PLUG GAGES

Gage Type	Dimensions to Be Checked	Comment
"Go" Composite Plug (GCP): Side fit (Fig. 8-5)	Minimum effective space width and form diameter	Guarantees proper assembly with at least the design clearance
"Go" Composite Plug (GCP); Major diameter fit (Fig. 8-6)	Minimum effective space width, form diameter, concentricity between pitch, and major circles and land at major diameter; also minimum major diameter of part	Guarantees proper assembly with at least the design clearance
"Not Go" Composite Plug (NGCP (Fig. 8-5)	Maximum effective space width for backlash or effective error control	To be used with GCP side fit for light load, high-precision application. When load is critical, it should be used with GCP and NGSP. Guarantees assembly at no more than maximum clearance.
"Not Go" Sector (NGSP) (Fig. 8-7)	Maximum actual space width for effective error control when load is critical	When used with GCP, guarantees than an excessive amount of material has not been removed—strength is not affected.
"Go" Major Diameter Plug (GMDP) (Fig. 8-8)	Minimum major diameter, minimum effective space width, eccentricity between major and pitch circles, or the fillet	Usually has a full complement of teeth that clear the part tooth profiles but may also take the form of a sector gage. The sides of the teeth may have any form provided they clear the tooth profiles and fillets of the part.
"Not Go" Major Diameter Plug (NGMDP) (Fig. 8-8)	Maximum major diameter	Guarantees that centralizing clearance will not exceed the maximum design limit. Does not have full completment of teeth. Sometimes may accept parts that exceed the dimensional limits.
Taper Tooth Composite Plug (TTCP): Side fit (Fig. 8-9)	Serves same function as the gage it is substituted for	It is a substitute for GCP (side fit) or for GCP (side fit) and NGCP in light load, high-precision applications to be used when the combined tolerances and wear allowances of all pertinent gages exceed 25% of part tolerance.
Taper Tooth Sector Plug (TTSP): (Fig. 8-10)	Same as NGSP	Substitute for NGSP when combined tolerances and wear allowances in the set exceed 25% of the part tolerances.

Downloaded from http://www.everyspec.com

8.3.1.2 Design of Spline Plug Gage

The following is a step-by-step design procedure for spline plug gages:

1. *Select Type of Spline Plug Gage*:

Selection of a particular type of spline plug gage depends on the following factors:

a. Type of internal spline, e.g., straight (parallel) sided or involute

b. Type of fit of splines, e.g. side fit or major diameter fit

c. The dimension to be gaged and end use of the spline—e.g., circular tooth thickness, circular space width, or major diameter—and whether the end use of the spline involves light or heavy loading

d. Accuracy required—e.g., if the combination of gage tolerance and wear allowance is greater than 25% of the product tolerance, then a tapered tooth plug gage should be used; otherwise, "Go" and "Not Go" gages should be used.

Use of tapered tooth plug gages is preferred because, unlike other plug gages, they do not use a portion of the product tolerance. The wear allowance provided on the "Go" gage is the only amount the tapered tooth plug gages use from the product tolerance.

2. *Select Material of Construction*. Hardened tool steel is the most commonly used material for spline gages. Other materials may be selected from Table 7-1 for longer gage life and for other gage parts.

3. *Select Tolerance and Wear Allowance*:

The gage maker's tolerance for plug gages depends on the method of dimensioning and types of gages required as listed in Table 8-3.

Variation allowances for total profile, total index, runout, and lead are listed in Table 8-4; machining tolerances on actual tooth spacing and tooth thickness are listed in Table 8-5; tolerances on major and minor diameters are listed in Table 8-6; and wear allowances are listed in Table 8-7.

TABLE 8-3. GAGE MAKER'S TOLERANCES AS A FUNCTION OF METHODS OF DIMENSIONING AND TYPE OF GAGE

Method of Dimensioning	Gages Required	Total Tolerance
Standard	"Go" composite "Not Go" sector	Variation allowance + Machining tolerance
Alternative A	"Go" composite "Not Go" sector	Variation allowance + Machining tolerance
Alternative B	"Go" composite "Not Go" composite	Machining tolerance

TABLE 8-4. VARIATION ALLOWANCES[a] (Ref. 12)

Pitch Diameter *D*, in.		Profile Total, in.	Index Total, in.	Runout (FIM)[b], in.		Total Length, in.		Lead
Over	Through			Ring Gage	Plug Gage	Over	Through	
0.00	2.00	0.0002	0.0002	0.0003	0.0002	0.00	1.00	0.000
2.00	4.00	0.0002	0.0002	0.0004	0.0003	1.00	3.00	0.0002
4.00	6.00	0.0002	0.0003	0.0005	0.0004	3.00	5.00	0.0003
6.00	8.00	0.0002	0.0004	0.0005	0.0004			

[a]The accumulation of variations can be checked only in the case of rings fitted to master plugs. The actual space width of the ring may exceed the actual tooth thickness of the master, at the fit plane, by 0.0004 in. maximum, up to 8.00 in. pitch diameter.
[b]Referred to centers of plug gages and to indicating bands of ring gages.

FIM = full indicator movement

Reprinted with permission © 1970 Society of Automotive Engineers, Inc.

Downloaded from http://www.everyspec.com

TABLE 8-5. TOLERANCES FOR ACTUAL SPACING AND TOOTH THICKNESS OF GAGES IN HUNDRED THOUSANDTHS OF AN INCH (20 = 0.00020 in.) (Ref. 12)

Spline Pitch \ N*	6	8	10	12	14	16	18	20	22	24	26	28	30	32	34	36	38	40	42	45	50	55	60 to 100
5/10	10	10	10	10	10	10	10	10	11	12	13	14	15	16	17	18	19	20	—	—	—	—	—
6/12	10	10	10	10	10	10	10	10	10	10	11	12	13	13	14	15	16	17	18	19	21	23	25
8/16	10	10	10	10	10	10	10	10	10	10	10	10	10	10	11	11	12	13	13	14	16	18	20
10/20	10	10	10	10	10	10	10	10	10	10	10	10	10	10	10	10	10	10	11	11	13	15	17
12/24 and finer	10	10	10	10	10	10	10	10	10	10	10	10	10	10	10	10	10	10	10	10	11	12	13

*N = number of spline teeth
NOTE: For coarser pitches, gage manufacturers' recommendations should be followed.

Reprinted with permission © 1970 Society of Automotive Engineers, Inc.

TABLE 8-6. TOLERANCES FOR MAJOR AND MINOR DIAMETERS (Ref. 12)

Type of Fit	Plug Gage				Ring Gage			
	Major Diameters[a], in.				Minor Diameter[a], in.			
	Over 0.00 through 1.50	Over 1.50 through 6.00	Over 6.00 through 8.00	Minor Diameter[b]	Over 0.00 through 1.50	Over 1.50 through 6.0	Over 6.00 through 8.00	Major Diameter[b]
Side	0.0005	0.0005	0.0005	Maximum	0.0005	0.0005	0.0010	Minimum
Major Diameter	0.0001	0.0002	0.0003	Maximum	0.0005	0.0005	0.0010	Minimum

[a]Tolerances on truncated gage diameters and on major diameters of master plugs are twice those given in the table for side fit.
[b]These are clearance dimensions and do not require close tolerances.

Reprinted with permission © 1970 Society of Automotive Engineers, Inc.

TABLE 8-7. WEAR ALLOWANCES (Ref. 12)

Spline Pitch	Space Width or Tooth Thickness, in.		Major Diameter Checking Surfaces, in.
	Standard and Alternate A	Alternate B	
5/10 through 8/16	0.0003	0.0002	0.0002
10/20 through 20/40	0.0003	0.0002	0.0002
24/48 through 48/96	0.0002	0.0002	0.0002
64/128 through 128/256	0.0002	0.0002	0.0002

Reprinted with permission © 1970 Society of Automotive Engineers, Inc.

For most applications the total tolerance on the "Go" and "Not Go" gages and the wear allowance should not exceed 25% of the product tolerance. In cases where they are allowed to exceed this limit, the gages mentioned in Table 8-2 should be substituted to reduce gage manufacturing costs.

4. *Calculate Gage Dimensions and Specify Depth Requirements, Chamfers, and Corner Radii.* Equations for calculating the gage element dimensions are presented in Figs. 8-5 through 8-10. After the gaging element sizes are determined, the rest of the gage is sized. Proportions for standard gages have been worked out and are presented in Ref. 13. Chamfer dimensions are presented in Table 8-8.

5. *Specify Surface Finish and Hardness.* The surface finish for the functional and nonfunctional portions of the gage should be obtained from Tables 7-8 and 7-9 and hardness values from Table 7-10. All gaging surfaces should be hardened to C60 minimum on the Rockwell scale, tempered, and stabilized.

Downloaded from http://www.everyspec.com

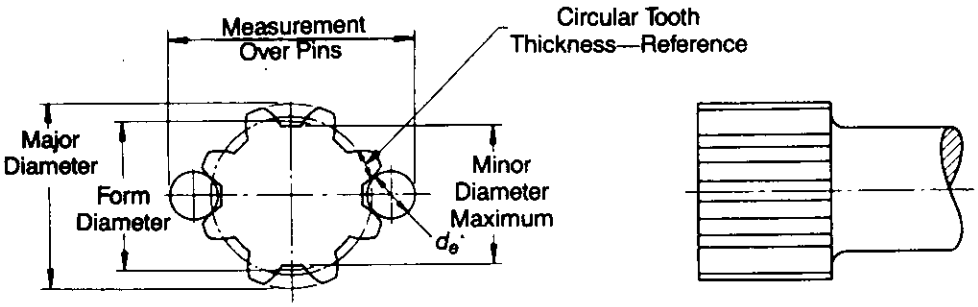

Gage Dimension		Equations, "Go"	Equations, "Not Go"
Major Dia		+ tolerance from D_R, Table 8-6, −0.000	$\frac{2D_R + D}{3}$ ± 0.0001 in.
Form Dia		D_r min − $2C_F$	
Minor Dia, max		Must clear form dia and measuring pins	
Circular Tooth Thickness, Reference	New Gage	s_v min + wear allowance from Table 8-7	s_v max
	Wear Limit	s_v min	None

Gage Dimension		Equations, "Go"	Equations, "Not Go"
Measuring Pin Dia d_e		1.9200/ P	
Measurement Over Pins	New Gage	+ tolerance based on Table 8-5 −0.0000	+0.0000 − tolerance based on Table 8-5
	Wear Limit	No Tolerance	Not applicable

Reprinted with permission © 1970 Society of Automotive Engineers, Inc.

Figure 8-5. Composite Spline Plug Gages and Equations "Go" and "Not Go", Side Fit and "Not Go" Major Diameter Fit (Ref. 12)

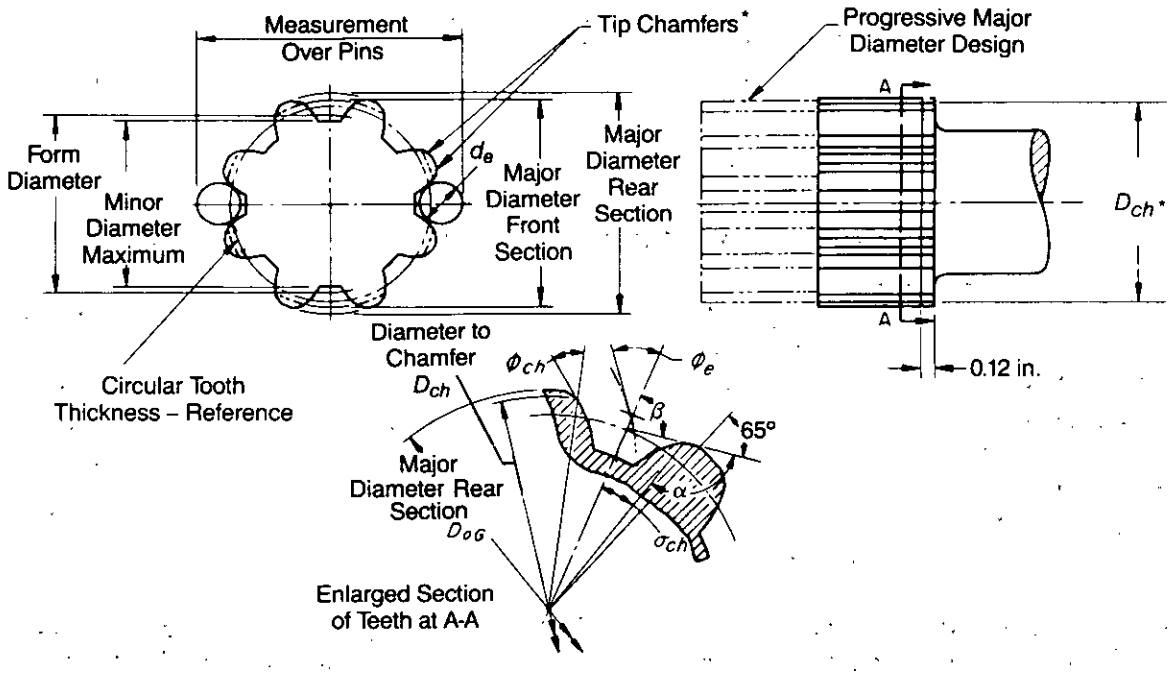

Figure 8-6. Composite Major Diameter Fit Spline Plug Gage and Equations: "Go" (Ref. 12)

(cont'd on next page)

Downloaded from http://www.everyspec.com

Gage Dimension			Equations, "Go"
Major	Rear Section D_{oG}	New Gage	D_{ri} min + wear allowance from Table 8-7 $^{+\text{ tolerance from Table 8-6}}_{-0.000}$
		Wear Limit	D_{ri}min
	Front Section		D_{Fi}, $^{+\text{ tolerance from Table 8-6}}_{-0.0000}$
Form Dia			D_i min − $2C_F$
Minor Dia, max			Must clear form dia and measuring pins
Circular Tooth Thickness, Reference		New Gage	s_v min + wear tolerance from Table 8-7
		Wear Limit	s_v min
Dia to Chamfer* D_{ch}			D_{Fi}, Ref
Chamfer* Cutting Angle β			$\sin\alpha = \dfrac{D_{oG}\sin 65°}{D_{Fi}}$, and $\cos\phi_{ch} = \dfrac{D_b}{D_{Fi}}$ (α always greater than 90 deg) $\sigma_{ch} = \left(\dfrac{\pi}{N} - \dfrac{s_v\text{min}}{D} - \text{inv } 30° + \text{inv}^{\dagger}\phi_{ch}\right)\dfrac{180°}{\pi}$, deg $\beta = 180° - \alpha + \sigma_{ch}$, deg (see Table 8-8.)
Measurements for Chamfer*			The start of chamfer for this gage may be assured visually by use of the witness diameter D_{ch} or by determination of the roll angle at the start of chamfer when inspected on a involute checker.
Measuring Pin Dia d_e			$\dfrac{1.9200}{P}$
Measurement Over Pins		New Gage	$^{+\text{tolerance based on Table 8-5}}_{-0.0000}$
		Wear Limit	No tolerance

*Where corner clearance is used, the gage is not chamfered.
†inv = involute

Reprinted with permission © 1970 Society Society of Automotive Engineers, Inc.

Figure 8-6. (cont'd)

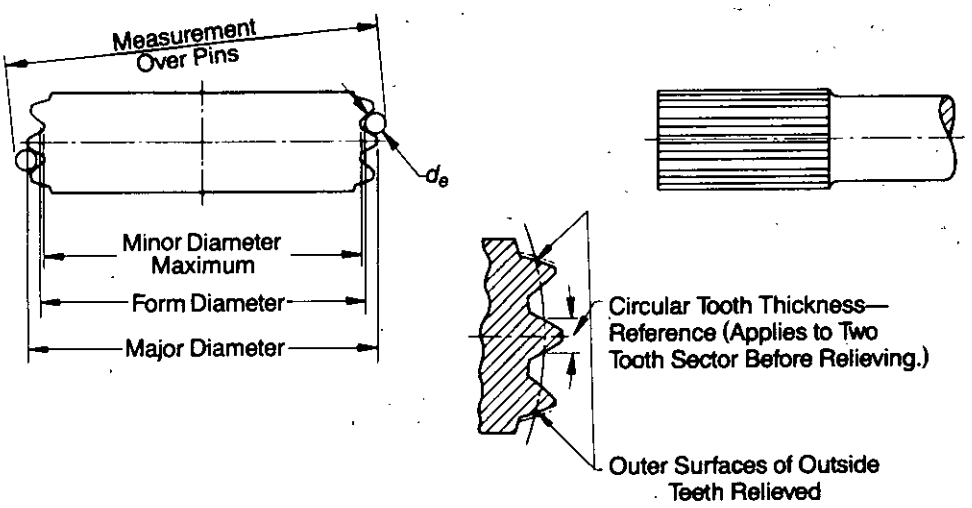

Gage Dimension	Equations, "Not Go"	Gage Dimension		Equations, "Not Go"						
Major Dia	$\dfrac{2D_{Fi} + D}{3}$, ± 0.001 in.	Circular Tooth Thickness, Reference		s max						
		Measurement Over Pins		+ 0.0000, − tolerance based on Table 8-5						
Form Dia	D_i min − $2C_F$	No. of Teeth N	In Spline	6-30	31-44	45-58	59-72	73-86	87-100	N
Minor Dia, max	Must clear form dia, and measuring pins		In Sector	2	3	4	5	6	7	$0.075N$

Reprinted with permission © 1970 Society of Automotive Engineers, Inc.

Figure 8-7. Sector Spline Plug Gage and Equations: "Not Go" (Ref. 12)

Downloaded from http://www.everyspec.com

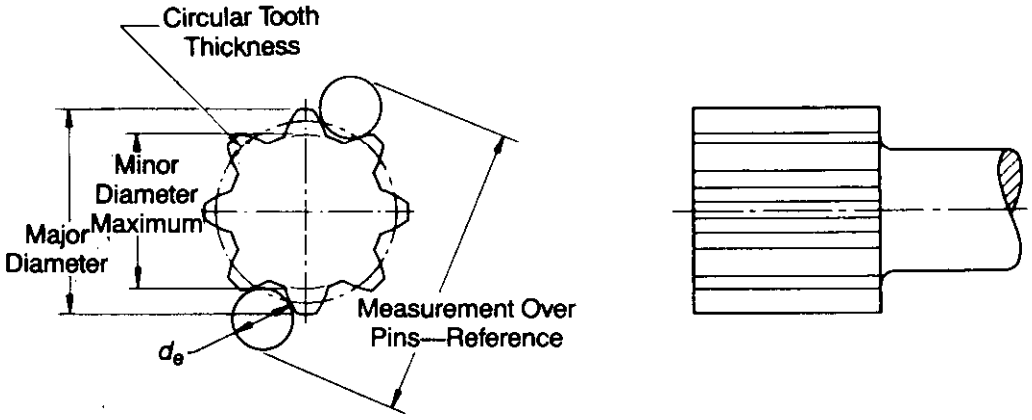

Gage Dimension		Equations, "Go"	Equations, "Not Go"
Major Dia	New Gage	$D_n$min + wear allowance from Table 8-7 + tolerance from Table 8-6 − 0.000	D_n max. $^{+0.000}_{-}$ tolerance from Table 8-6
	Wear Limit	D_n min	None
Minor Dia, max		Must clear minor dia of part and measuring pins	
Circular Tooth Thickness for Involute Teeth		Must privide adequate top land at the major diameter without interference with the fillet radii of the internal spline where corner clearance is not used.	

Reprinted with permission © 1970 Society of Automotive Engineers, Inc.

Figure 8-8. Major Diameter Spline Plug Gage and Equations: "Go" and "Not Go" (Ref. 12)

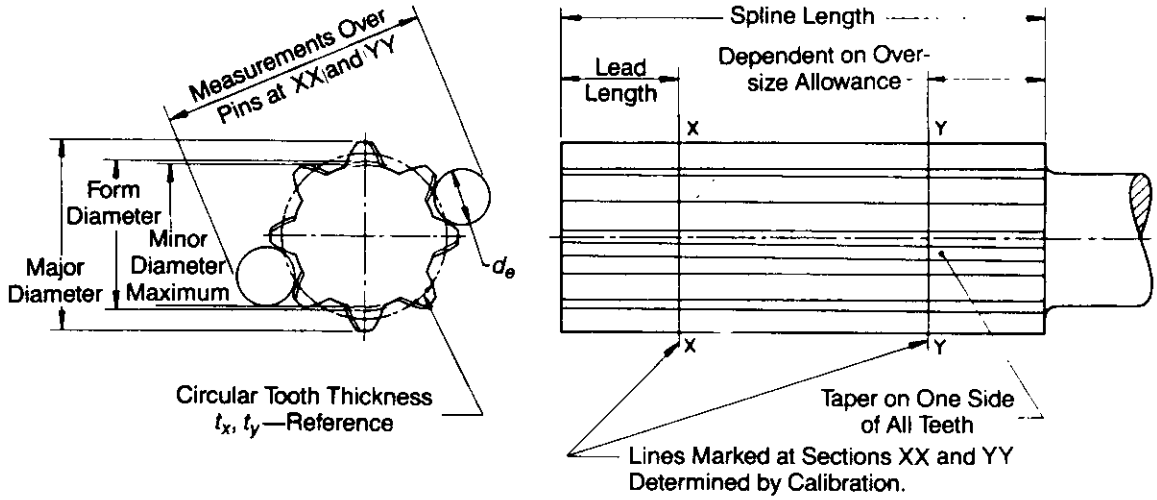

Gage Dimension		Equations	Gage Dimension	Equations
Major Dia		D_{F_n} + tolerance from Table 8-6 − 0.000	Circular Tooth Thickness Taper per in., TPI, Reference	To be selected to suit gage manufacture, not less than 0.0002 in.
Form Dia		D_i min − $2C_F$	Lead Length	Not less than two-thirds part spline length or 0.25 in.
Minor Dia, max		Must clear form dia and measuring pins	Oversize Allowance	To be selected to suit gage application
Circular Tooth Thickness, Reference	t_x at XX	s_v min	Spline Length	$t_y - t_x$ + oversize allowance / TPI + lead length
	t_y at YY	s_v max		
Measurements Over Pins at XX and YY		No tolerance		Should be less than 6D, preferably less than 4D. To reduce length, tooth thickness taper per inch is increased, oversize allowance is decreased, or both.

TPI = threads per inch

Reprinted with permission © 1970 Society of Automotive Engineers, Inc.

Figure 8-9. Tapered Tooth Composite Spline Plug Gage and Equations: Side Fit (Ref. 12)

Downloaded from http://www.everyspec.com

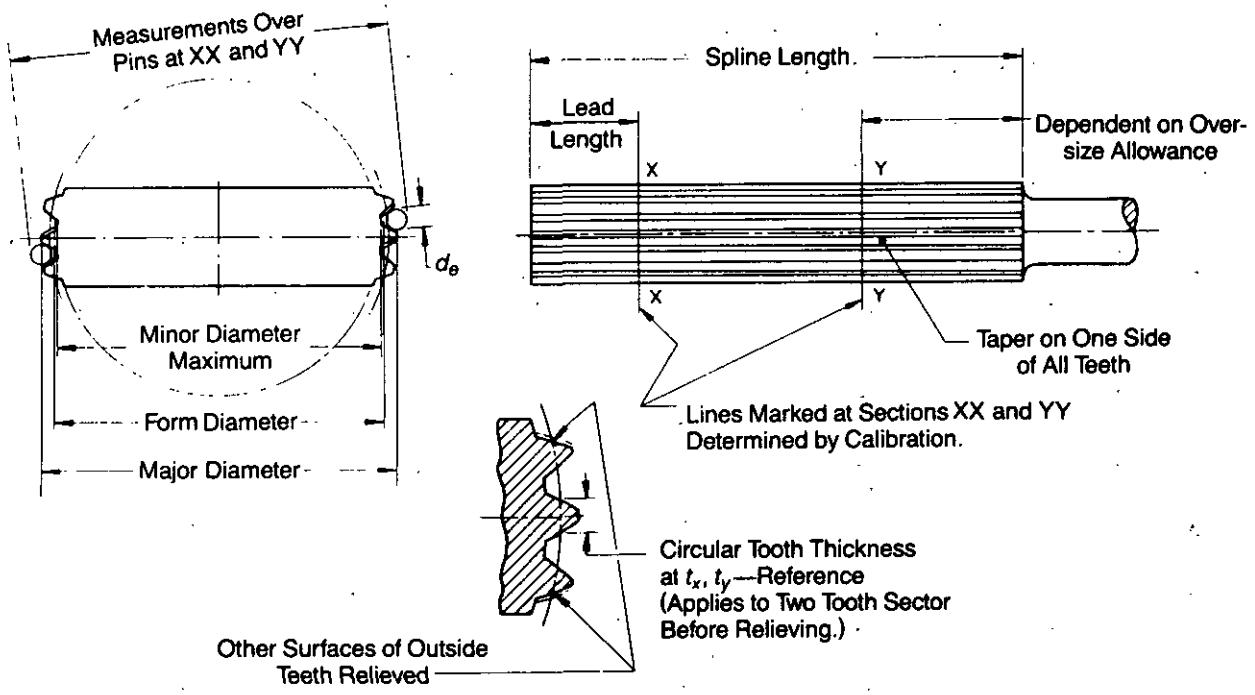

Gage Dimension		Equations						
Major Dia		$\frac{2D_{Fi} + D}{3}$, ± 0.0001 in.						
Form Dia		D_i min − $2C_F$						
Minor Dia max		Must clear form dia and measuring pins						
Circular Tooth Thickness, Reference	t_x at XX	s min						
	t_y at YY	s max						
Measurements Over Pins at XX and YY		No tolerance						
Circular Tooth Thickness Taper per in., TPI, Ref		To be selected to suit gage manufacture, not less than 0.0002 in.						
Lead Length		Not less than two-thirds of part spline length, or 0.25 in.						
Oversize Allowance		To be selected to suit gage application						
Spline Length		$\frac{t_y - t_x + \text{oversize allowance}}{\text{TPI}}$, + lead length						
		Should be less than $6D$, preferably less than $4D$. To reduce length, tooth thickness taper per inch is increased, oversize allowance is decreased, or both.						
No. of Teeth, N	In Spline	6-30	31-44	45-58	59-72	73-86	87-100	N
	In Sector	2	3	4	5	6	7	$0.075N$

Reprinted with permission © 1970 Society of Automotive Engineers, Inc.

Figure 8-10. Tapered Tooth Sector Spline Plug Gage and Equations (Ref. 12)

Downloaded from http://www.everyspec.com

TABLE 8-8. CHAMFER CUTTING ANGLE β FOR "GO" COMPOSITE MAJOR DIAMETER FIT PLUG GAGE (Ref. 12)

N*	Angle β, deg	N*	Angle β, deg	N*	Angle β, deg	N*	Angle β, deg
6	89.0	31	69.5	56	67.4	81	66.6
7	85.5	32	69.4	57	67.4	82	66.6
8	82.9	33	69.2	58	67.3	83	66.6
9	80.9	34	69.1	59	67.3	84	66.5
10	79.3	35	69.0	60	67.2	85	66.5
11	78.0	36	68.9	61	67.2	86	66.5
12	76.9	37	68.7	62	67.2	87	66.5
13	76.0	38	68.6	63	67.1	88	66.5
14	75.2	39	68.5	64	67.1	89	66.5
15	74.5	40	68.5	65	67.1	90	66.4
16	73.9	41	68.4	66	67.0	91	66.4
17	73.4	42	68.3	67	67.0	92	66.4
18	72.9	43	68.2	68	67.0	93	66.4
19	72.5	44	68.1	69	66.9	94	66.4
20	72.1	45	68.0	70	66.9	95	66.3
21	71.8	46	68.0	71	66.9	96	66.3
22	71.4	47	67.9	72	66.9	97	66.3
23	71.1	48	67.8	73	66.8	98	66.3
24	70.9	49	67.8	74	66.8	99	66.3
25	70.6	50	67.7	75	66.8	100	66.3
26	70.4	51	67.7	76	66.7		
27	70.2	52	67.6	77	66.7		
28	70.0	53	67.6	78	66.7		
29	69.8	54	67.5	79	66.7		
30	69.7	55	67.5	80	66.6		

*N = number of spline teeth
Reprinted with permission © 1970 Society of Automotive Engineers, Inc.

6. *Select Standard Blank Sizes and Other Gage Hardware.* Ref. 13 presents a series of standardized gage blank sizes and other gage hardware, such as either integral or detachable handles, and mounting hardware. Use of these standard components is recommended.

7. *Prepare Gage Manufacturing Drawings.* Manufacturing drawings for spline gages must be prepared in accordance with Refs. 14, 15, 16, and 17.

8.3.1.3 Example of Spline Plug Gage Design

An example of spline plug gage design by using the step-by-step procedure in par. 8.3.1.2 follows:

8.3.1.3.1 Requirement

Design a spline plug gage to inspect a product with the product specification that follows.

Product Specification: An involute fillet root side fit, Tolerance Class 5, 2.5/5 pitch, 1.5-in. long internal spline with standard method of dimensioning. From Ref. 12, Table 25:

Number of teeth N	15
Pitch	2.5 in.
Stub pitch p_s	5.0 in.

Downloaded from http://www.everyspec.com

Pressure angle ϕ	30 deg
Base diameter D_b	5.196152 in.
Pitch diameter D	6.000000 in.
Maximum major diameter D_{ri}	6.775000 in.
Form diameter D_{Fi}	6.412000 in.
Minor diameter D_i	5.600000 in.
Maximum actual circular space width (tolerance Class 5)	0.6325 in.
Minimum effective circular space width s_v min	0.6283 in.

8.3.1.3.2 Solution

The solution follows:

1. *Select Type of Spline Plug Gage.* Because the standard method of dimensioning is to be used, the dimensions to be controlled are the maximum actual space width and the minimum effective space width. Therefore, from Table 7-4, a "Go" composite plug (GCP) and "Not Go" sector plug (NGSP) are required.

2. *Select Material of Construction* (from Table 7-4). Hardened tool steel.

3. *Select Tolerances and Wear Allowances* (from Tables 8-4, 8-5, 8-6, and 8-7 for 6-in. pitch diameter and 1.5-in. length):

Gage Element	Tolerance, in.
Total profile	0.0002
Total index	0.0003
Runout (FIM)	0.0004
Lead (FIM) (For total length 1.5 in.)	0.0003
Tooth thickness (Use values for 5/10 spline pitch because it is sufficient for a coarser pitch.) (See Table 8-7.)	0.0001
Major diameter tolerance	0.0005

Minor diameter tolerance must clear product maximum minor diameter.

4. *Calculate Gage Dimensions and Specify Depth Requirements, Chamfers, and Corner Radii:*

a. For "Go" Composite Side Fit Plug Gage:

Major diameter (See Fig. 8-5) = Product form diameter D_{Fi} + tolerance from Table 8-6 − 0.0000

$$= 6.412 \begin{matrix} +0.0005 \\ -0.0000 \end{matrix} \text{ (from Table 8-6), in.}$$

Form diameter (See Fig. 8-5) = Product minor diameter D_i − 2(form Clearance C_F)

$[C_F = 0.001D = 0.001(6) = 0.006]$

$= 5.600 - 2\,(0.006)$

$= 5.588$ in.

Measuring pin diameter = 0.7680 in. (From Table 81, Ref. 12)

Maximum minor diameter must clear form diameter and measuring pins.

Measurment over pins = 7.1372 in. (From Table 81, Ref. 12)

Circular tooth thickness (See Fig. 8-5) = Product minimum effective circular space width s_v + wear allowance from Table 8-7

$= 0.6283 + 0.0003$

$= 0.6286$ in.

Downloaded from http://www.everyspec.com

Wear limit (see Fig. 8-5) = 0.6283 in.

b. For "Not Go" Sector Plug Gage:

Major diameter (See Fig. 8-5)

$$= \frac{2\,(\text{product form diameter } D_{Fi}) + \text{pitch diameter } D}{3} \pm 0.001$$

$$= \frac{2\,(6.412) + 6.000}{3} \pm 0.001$$

$$= 6.2747 \pm .0010 \text{ in.}$$

Form diameter = Product minor diameter $D_i - 2$ (form clearance C_F)

$[C_F = 0.001D = 0.001(6) = 0.006]$

$= 5.600 - 2(0.006)$

$= 5.588$ in.

Measuring pin diameter = 0.7680 in. (From Table 81, Ref. 12)

Maximum minor diameter must clear form diameter and measuring pins.

Measurement over pins = 7.1372 in. (From Table 81, Ref. 12)

Circular tooth thickness (See Fig. 8-7) = Product maximum actual circular space width s max

= 0.6325 in.

Number of teeth (for 15 teeth in spline) (See Fig. 8-7) = 2.

5. *Specify Surface Finish and Hardness* (from Tables 7-8 and 7-10):

	Surface Finish	Hardness
Gaging surfaces	8 μin.	C60 min (Rockwell)
Nongaging surfaces	63 μin.	Commercial.

6. *Select Standard Blank Sizes and Other Gage Hardware:*

a. For "Go" Composite Plug Gage. For gage major diameter 6.412 in., the standard blank is 1.5 in. long with a 2.7504/2.7500-in. hole for the handle. The handle is American Gage Design (AGD) Standard No. GB 9-2 with two washers, No. GB-8-1 and No. GB-8-3. (From Table 46, Ref. 13.)

b. For "Not Go" Sector Plug Gage. For gage major diameter 6.412 in., the standard blank is 1.0 in. long with a 2.7504/2.7500-in. hole for the handle. The handle is AGD Standard No. GB-9-2 with washers No. GB-8-1 and No. GB-8-3. (From Table 46, Ref. 13.)

7. *Prepare Gage Drawings and/or Specifications.* Gage drawings must be prepared in accordance with Refs. 14, 15, 16, and 17.

8.3.2 SPLINE RING GAGES

A spline ring gage is a ring gage with a full or partial complement of splines of appropriate dimensions that is used for checking external splines. A discussion of the most common types of spline ring gages follows.

8.3.2.1 Types

Spline ring gages are classified by their construction and the types of splines they gage. Table 8-9 lists the major spline gages for external splines, their uses, and other relevant selection information.

Downloaded from http://www.everyspec.com

TABLE 8-9. TYPES AND USES OF SPLINE RING GAGES

Gage Type	Dimensions to Be Checked	Comments
"Go" Composite Ring (GCR): side fit (Fig. 8-11)	Maximum effective tooth thickness and form diameter	Guarantees assembly at no less than minimum design clearance
"Go" Composite Ring (GCR): major diameter fit (Fig. 8-12)	Maximum effective tooth thickness, form diameter, concentricity between pitch, and major circles, and land at major diameter	Guarantees assembly at no less than minimum design clearance
"Not Go" Composite Ring (NGCR) (Fig. 8-11)	Backlash or effective error. Minimum effective tooth thickness	To be used with GCR for for light load, high-precision application. When load is critical, it should be used with both GCR and NGSR.
"Not Go" Sector Ring (NGSR) (Fig. 8-13)	Minimum actual tooth thickness	When used with GCR, insures that excessive material has not been removed and thereby guarantees tooth strength. Also controls effective error when load is critical.
Taper Tooth Master (TTM) For "Go" and "Not Go" spline ring gages (Figs. 8-14 and 8-15)	Composite spline ring gage and "Not Go" sector ring gage dimensions	Economical, accurate, method of ring gage surveillance for wear, damage, distortion, or metallurgical changes
"Not Go" Major Diameter Ring (NGMDR) (Fig. 8-11)	Minimum major diameter	Guarantees that centralizing clearance does not exceed maximum design limit. Similar to plain ring gage. For even number of teeth in the spline, replace with plain "Not Go" snap gage.

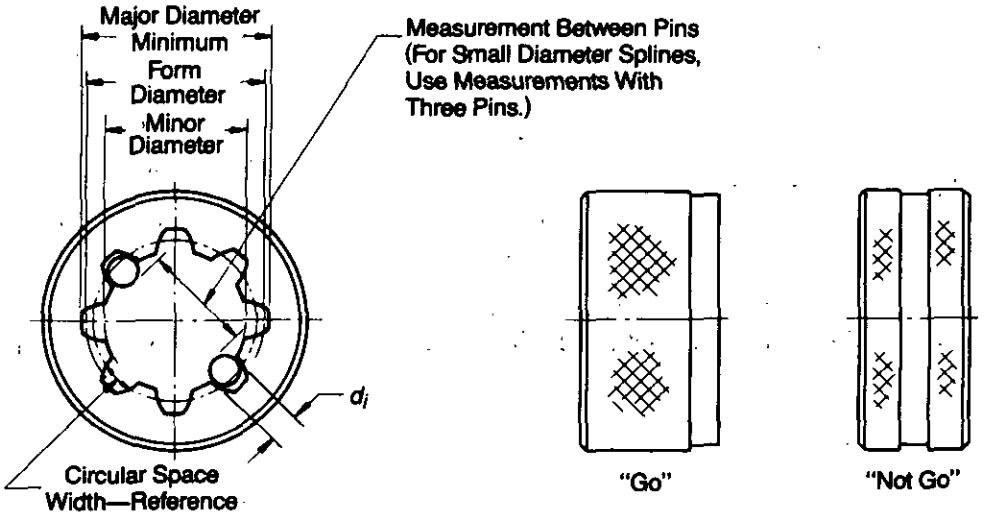

Gage Dimension		Equations, "Go"	Equations, "Not Go"
Minor Dia		D_{F_e} + 0.000 − tolerance from Table 8-6	$\frac{D + 2D_{Fe}}{3}$, ± 0.0001
Form Dia		D_e max + $2C_F$	
Major Dia, min		Must clear form dia and measuring pins	
Circular Space Width, Reference	New Gage	t_v max − wear allowance from Table 8-7	t_v min
	Wear Limit	t_v max	None

Gage Dimension			Equations, "Go"	Equations, "Not Go"
Measuring Pin Dia			1.7280/ P	
Measurement Between Pins	Ring fitted to tapered tooth master		Use t_v max, Reference	Use t_v min, Reference
	Ring finished without master	New Gage	+0.0000 −tolerance based on Table 8-5	+tolerance based on Table 8-5 −0.0000
		Wear Limit	No tolerance	Not applicable

Reprinted with permission © 1970 Society of Automotive Engineers, Inc.

Figure 8-11. Composite Spline Ring Gages and Equations: "Go" and "Not Go" Side Fit and "Not Go" Major Diameter Fit (Ref. 12)

Downloaded from http://www.everyspec.com

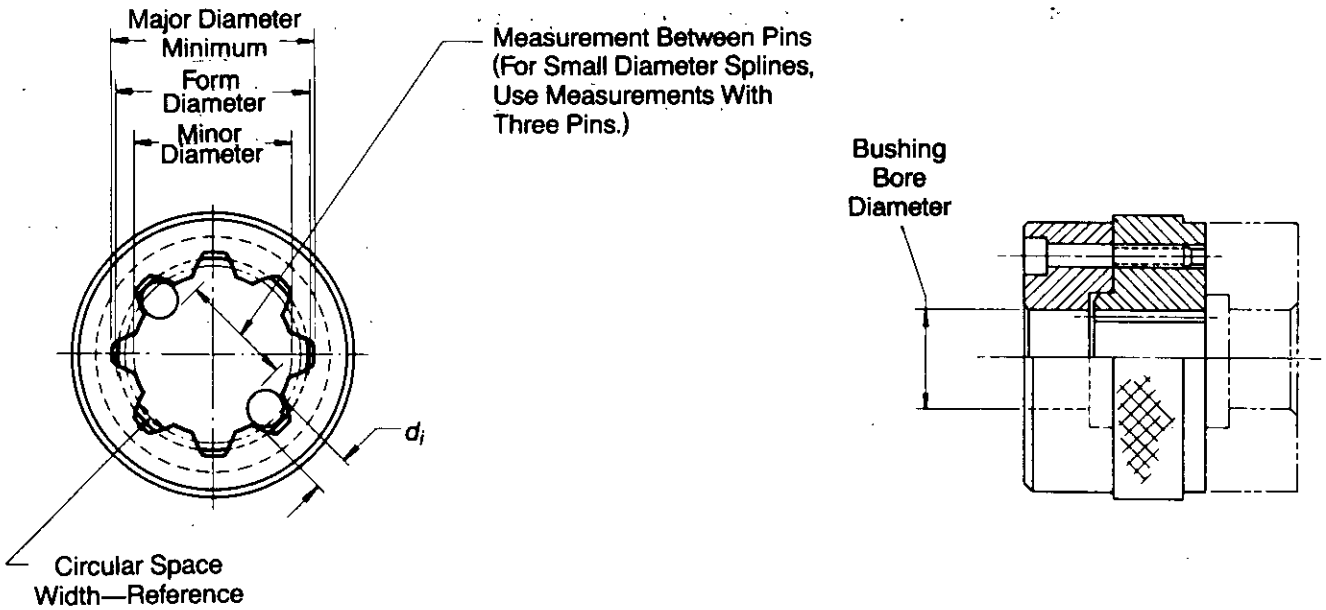

Gage Dimension			Equations, "Go"
Bushing Bore			D_o max − wear allowance from Table 8-7, $^{+0.0000}_{-5+\frac{2D}{100000}}$
Minor Dia			D_{Fi}, $^{+0.000}_{-}$ tolerance from Table 8-6
Form Dia			D_o max + $2C_F$
Major Dia of Spline, min			Must clear major dia of part
Circular Space Width, Reference		New Gage	t_v max − wear allowance from Table 8-7
		Wear Limit	t_v max
Measuring Pin Dia			$\frac{1.7280}{P}$
Measurement Between Pins	Ring fitted to tapered tooth master		Use t_v max, Reference
	Ring finished without master	New Gage	+0.0000 −tolerance based on Table 8-5
		Wear Limit	No tolerance

Reprinted with permission © 1970 Society of Automotive Engineers, Inc.

Figure 8-12. Composite Major Diameter Fit Spline Ring Gage and Equations: "Go" (Ref. 12)

Downloaded from http://www.everyspec.com

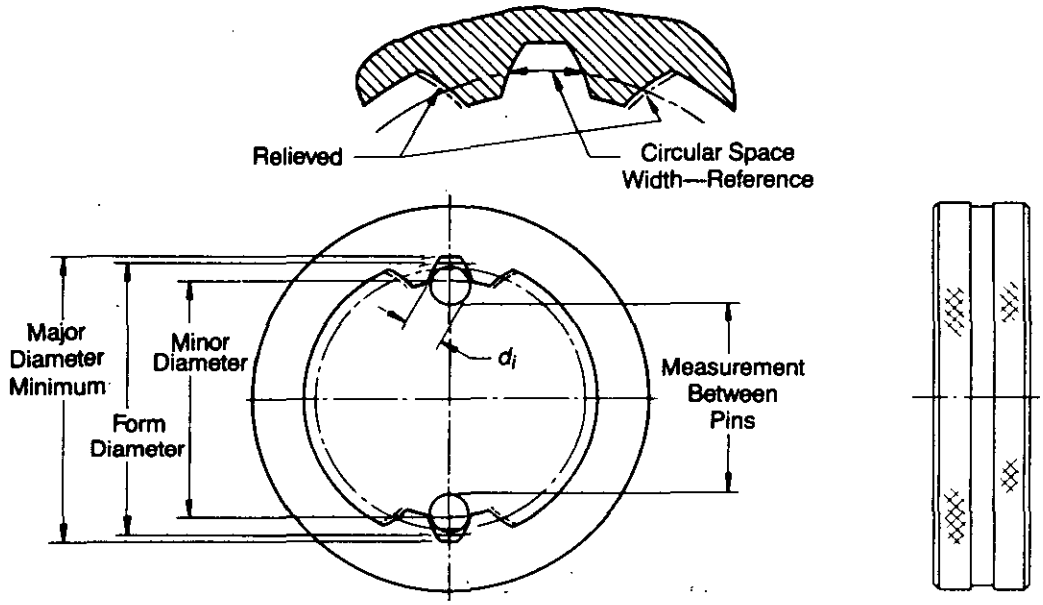

Gage Dimension	Equations, "Not Go"
Minor Dia	$\frac{D + 2D_{F_e}}{3}$, ± 0.001 in.
Form Dia	D_o max
Major Dia, max	Must clear form dia, and measuring pins
Circular Space Width, Reference	t min

Gage Dimension									Equations, "Not Go"
Measurement Between Pins, Calculated			Ring fitted to tapered tooth master						Reference
			Ring finished without master						+ tolerance based on Table 8-5 −0.0000
No. of Teeth N	In Spline	6-30	31-44	45-58	59-72	73-86	87-100	N	
	In Sector	2	3	4	5	6	7	$0.075N$	

Reprinted with permission © 1970 Society of Automotive Engineers, Inc.

Figure 8-13. Sector Spline Ring Gage and Equations: "Not Go" (Ref. 12)

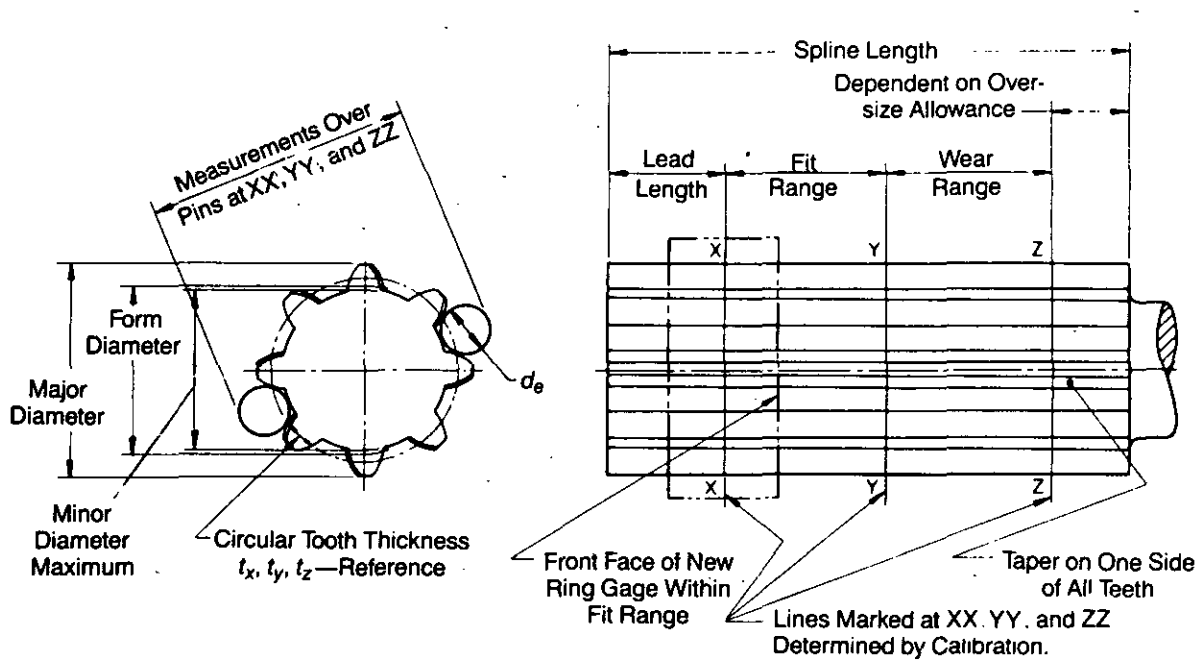

Figure 8-14. Tapered Tooth Master for Composite Ring Gage and Equations (Ref. 12)

(cont'd on next page)

Downloaded from http://www.everyspec.com

Dimension of Master		Equations, "Go" Ring Master	Equations, "Not Go" Ring Master
Major Dia		D_o min $^{+0.000}_{-\text{tolerance from Table 8-6}}$ For major diameter fit, reduce applicable D_o min by twice maximum chamfer	
Form Dia		D_{Fe} − 0.010 in.	$\frac{D + 2D_{Fe}}{3}$ − 0.010 in.
Minor Dia, max		Must clear form dia and measuring pins	
Circular Tooth Thickness, Reference	t_x at XX	t_v max − wear allowance from Table 8-7 − tolerance from Table 8-5	t_v min
	t_y at YY	t_v max − wear allowance from Table 8-7	t_v min + tolerance from Table 8-5
	t_z at ZZ	t_v max	Not applicable
Measurement Over Pins at XX, YY, and ZZ		No tolerance	
Circular Tooth Thickness Taper per in., TPI, Reference		To be selected to suit gage manufacture, not less than 0.0002 in.	
Lead Length		Not less than width ring, preferably twice the width	
Oversize Allowance		To be selected to suit gage application	
Spline Length		$\frac{t_z - t_x + \text{oversize allowance}}{\text{TPI}}$ + lead length	$\frac{t_y - t_x + \text{oversize allowance}}{\text{TPI}}$ + lead length
		Should be less than $6D$, preferably less than $4D$. To reduce length, tooth thickness taper per inch is increased, oversize allowance is decreased, or both.	

Reprinted with permission © 1970 Society of Automotive Engineers, Inc.

Figure 8-14. (cont'd)

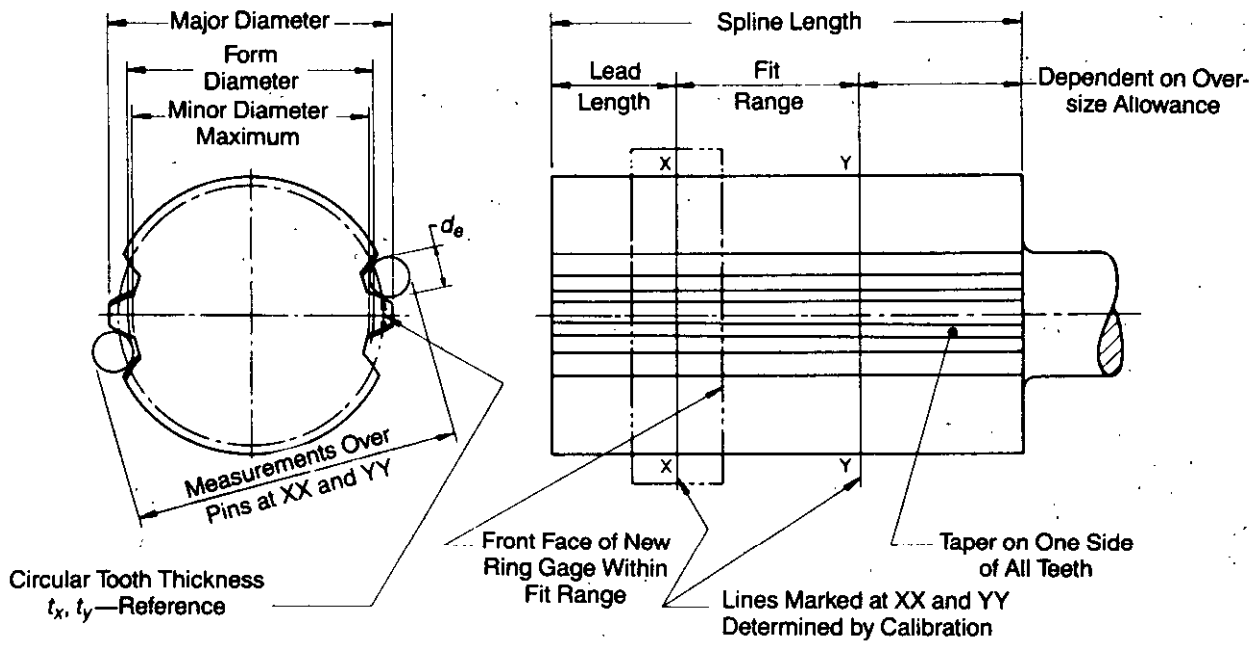

Figure 8-15. Tapered Tooth Master for "Not Go" Sector Ring Gage and Equations (Ref. 12)

(cont'd on next page)

Downloaded from http://www.everyspec.com

Dimension of Master		Equations
Major Dia		D_o min. $^{+0.000}_{-\text{tolerance from Table 8-6}}$ For major diameter fit, reduce applicable D_o min by twice maximum chamfer
Form Dia		$\frac{D + 2D_{Fe}}{3} - 0.0010$ in.
Minor Dia, max		Must clear form dia and measuring pins
Circular Tooth Thickness, Reference	t_x at XX	t min
	t_y at YY	t min + tolerance from Table 8-5
Measurements Over Pins at XX, YY		No tolerance
Circular Tooth Thickness Taper per in., TPI, Reference		To be selected to suit gage manufacture, not less than 0.0002 in.
Lead Length		Not less than width of ring, preferably twice the width
Oversize Allowance		To be selected to suit gage application
Spline Length		$\frac{t_y - t_x + \text{oversize allowance}}{\text{TPI}} + \text{lead length}$
		Should be less than $6D$, preferably less than $4D$. To reduce length, tooth thickness taper per inch is increased, oversize allowance is decreased, or both.
No. of Teeth N		To be same as in Sector Ring, see Fig. 8-13

Reprinted with permission © 1970 Society of Automotive Engineers, Inc.

Figure 8-15. (cont'd)

8.3.2.2 Design of a Spline Ring Gage

The following is a step-by-step design procedure for spline ring gages:

1. *Select Type of Spline Ring Gage.* Selection of spline ring gage type is governed by the following factors:
   a. Type of external spline, e.g., straight (parallel) sided or involute
   b. Type of fit of splines, e.g., side fit or major diameter fit
   c. The dimension to be gaged and end use of the external spline—e.g., effective tooth thickness, major diameter, or effective space width—and whether the end use of the spline involves light or heavy loading
   d. Accuracy required—e.g., if the combined gage tolerances and wear allowances of both limit gages can be allowed to exceed 25% of product tolerance, substitute gages can be used to reduce gage manufacturing costs.

2. *Select Material of Construction.* Hardened tool steel is the most commonly used material for spline gages. Other materials may be selected from Table 7-1 for longer gage life.

3. *Select Tolerances and Wear Allowances.* Gage tolerances and wear allowances for spline gages can be obtained from Tables 8-4 through 8-7. The wear allowance in Table 8-7 is applicable only to the "Go" composite ring gage, whereas the tolerances in Table 8-7 are applicable to both the "Go" composite and "Not Go" composite and major diameter ring gages. Table 8-5 provides values for actual space width tolerances for the other errors in a ring gage such as profile error, index error, runout tooth length error, and parallection error.

4. *Calculate Gage Dimensions and Specify Depth Requirements, Chamfers, and Corner Radii.* After the gaging element dimensions are determined, the rest of the gage is to be sized based on economy, ease of use, and gage life. For standard gages the nongaging dimensions are determined by the selected gage blank. For nonstandard gages these dimensions should be chosen to provide durability, economy, and ease of use. Depth requirements should be specified on the gage so that the product is gaged to the required depth, chamfers should be provided on external nongaging surfaces to prevent injury to gage handlers, and corner radii should be provided to prevent interference with burrs or fillets on the product.

5. *Specify Surface Finish and Hardness.* Surface finish for the gaging and nonfunctional portions of the gage are described in Tables 7-8, and 7-9. The recommended hardness for gaging surfaces is C60 minimum on the Rockwell scale with tempering and stabilization.

6. *Select Standard Blank Sizes and Other Gage Hardware.* Ref. 13 presents a series of standardized gage blank sizes and other gage hardware such as integral or detachable handles and mounting hardware. Use of these standard components is recommended.

7. *Prepare Gage Manufacturing Drawing.* Manufacturing drawings for spline gages must be prepared in accordance with Refs. 14, 15, 16, and 17.

Downloaded from http://www.everyspec.com

8.3.2.3 Example of Spline Ring Gage Design

An example of spline ring gage design by using the step-by-step procedure discussed in par. 8.3.2.2 follows.

8.3.2.3.1 Requirement

Design a spline ring gage to inspect a product with the product specification that follows.

Product Specification: An involute, fillet root, side fit, tolerance Class 4, 12/24 pitch, 3.0-in. long external spline with standard method of dimensioning. From Ref. 12, Table 54:

Number of teeth N	54
Pitch	12 in.
Stub pitch p_s	24 in.
Pressure angle ϕ	45 deg
Base diameter D_b	3.181981 in.
Pitch diameter D	4.5000 in.
Major diameter D_o	4.5830 in.
Form diameter D_{Fe}	4.4400 in.
Minimum minor diameter D_{re}	4.4000 in.
Minimum actual circular tooth thickness (for Tolerance Class 4) t	0.1448 in.
Maximum effective circular tooth thickness t_v	0.1476 in.

8.3.2.3.2 Solution

The solution follows:

1. *Select Type of Spline Ring Gage.* Because the standard method of dimensioning is to be used, the dimensions to be controlled are the maximum effective tooth thickness and minimum actual tooth thickness. Therefore, from Table 8-9, a "Go" composite ring (GCR) and a "Not Go" sector ring (NGSR) are required.

2. *Select Material of Construction* (from Table 7-1). Hardened tool steel

3. *Select Tolerances and Wear Allowances* (from Tables 8-4, 8-5, 8-6, and 8-7 for 4.5-in. pitch diameter and 3.0-in. length):

Gage Element	Tolerance, in.
Total profile	0.0002
Total index	0.0003
Runout (FIM)	0.0005
Lead (FIM) (For 3.0-in. total length)	0.0003
Actual spacing	0.00012
Minor diameter	0.0005.

4. *Calculate Gage Dimensions and Specify Depth Requirements, Chamfers, and Corner Radii:*

a. For "Go" Composite Ring Gage:

Minor diameter (See Fig. 8-11) = Product form diameter D_{Fe} − tolerance (from Table 8-6)

= 4.4400 − 0.0005 in.

Form diameter (See Fig. 8-5) = Maximum major diameter D_o + 2(form clearance C_F)

$[C_F = 0.001D = 0.001(4.5) = 0.0045]$

= 4.583 + 2 (0.0045)

= 4.592 in.

Measuring pin diameter = 0.1600 in. (From Table 93 of Ref. 12)

Minimum major diameter must clear form diameter and measuring pins.

Measurment between pins = 4.2635 in. (From Table 93 of Ref. 12)

Downloaded from http://www.everyspec.com

Circular space width (See Fig. 8-11) = Maximum effective tooth thickness t_v − wear allowance
= 0.1476 − 0.0003
= 0.1473 in.

Wear limit (see Fig. 8-11) = 0.1476 in.

b. For "Not Go" Sector Ring Gage:

Minor diameter (See Fig. 8-11)

$$= \frac{\text{Product pitch diameter } D + 2\,(\text{product form diameter } D_{Fe})}{3} \pm 0.001$$

$$= \frac{4.500 + 2(4.440)}{3} \pm 0.001$$

$$= \frac{13.380}{3} \pm 0.001$$

$$= 4.460 \pm .001 \text{ in.}$$

Form diameter = Product maximum major diameter
= 4.583 in.

Measuring pin diameter = 0.1600 in. (From Table 93, Ref. 12)

Minimum major diameter must clear form diameter and measuring pins.

Measurement between pins = 4.2635 in. (From Table 93, Ref. 12)

Circular space width (See Fig. 8-13) = Minimum actual circular tooth thickness t min
= 0.1448 in.

Number of teeth (for 54 teeth in spline) (See Fig. 8-13) = 4.

5. *Specify Surface Finish and Hardness*:

	Surface Finish	Hardness
Gaging surfaces	8 μin.	C60 min (Rockwell)
Nongaging surfaces	63 μin.	Commercial.

6. *Select Standard Blank Sizes and Other Gage Hardware*:

a. For "Go" Composite Ring Gage. For gage major diameter 4.583 in. the standard blank has 7 in. outside diameter, 3 ⅜ in. inside diameter, is 1.0 in. wide, and has knurled external surface (From Table 49, Ref. 13).

b. For "Not Go" Sector Ring Gage. For gage major diameter 4.583 in., the standard blank has 7 in. outside diameter, 3 ⅜ in. inside diameter, is ¾ in. wide, and has knurled external surface with a groove (From Table 49, Ref. 13).

7. *Prepare Gage Drawings and/or Specifications.* Gage drawings must be prepared in accordance with Refs. 14, 15, 16, and 17.

Downloaded from http://www.everyspec.com

8.4 KEYWAYS

The three types of keyways in use are the parallel keyway, taper keyway, and the Woodruff keyway. The parallel keyway is a square or rectangular slot of specified depth and width. The tapered keyway is also a square or rectangular in cross section, but its depth is variable with a gradual taper. Both these keyways can be gaged by a basic gage, such as a flat plug gage discussed in par. 7.2. It is recommended that whenever possible, a "Go" gage be designed to check the minimum width and minimum depth of a keyway simultaneously.

The Woodruff keyway is a slot with a cross section of a segment of a circle. For gaging this slot, a special gage known as a Woodruff keyslot gage is used. ANSI B17.2, *Woodruff Keys and Keyseats* (Ref. 18), has standardized the key and keyseat dimensions. Woodruff keys are of two types: the full radius type and the flat bottom type. This variation between key types does not affect the keyslots.

8.4.1 TYPES OF KEYSLOT GAGES

The Woodruff keyslot gages are classified in two types—straight handle and the V-shaped handle—based on their construction. In both types the gaging element is a disk of appropriate diameter and thickness. On the straight-handle-type gage, the "Go" and the "Not Go" disks are mounted at the two ends of the gage. On the V-shaped-handle-type gage, the two gaging elements are at the ends of the two prongs of the handle. The disks are provided with three equally spaced retaining holes for locking them in three different positions in order to increase their life by exposing different segments to wear. Gaging is done by inserting the "Go" and the "Not Go"elements in the slot successively. Fig. 8-16 shows the two types of keyslot gages and their standardized dimensions.

8-4.2 DESIGN OF A KEYSLOT GAGE

A step-by-step design procedure for keyslot gages follows:

1. *Select Type of Keyslot Gage.* Selection of type of keyslot gage depends on the size of the keyslot. For key sizes up to 5/16 in. × 1⅛ in., a straight handle gage is recommended. The V-shaped handle gage is recommended for larger keyslots.

2. *Select Material of Construction.* The gaging disks usually are made of oil hardenable tool steel. Handles are made of materials such as mild steel or cast iron.

3. *Specify Disk Dimensions and Tolerances.* Dimensions of disks for standard keyslots are shown in Fig. 8-16. Tolerances are specified on each of these disk dimensions as follows:

Dimensions	Gages	Tolerance, in.
Diameter A	"Go"	+0.0002 −0.0000
	"Not Go"	±0.0010
Width B	"Go" and "Not Go"	+0.0002 −0.0000
Diameter C	"Go"	+0.0004 −0.0000
	"Not Go"	±0.0050
Diameter D	"Go" and "Not Go"	+0.0004 −0.0000.

4. *Determine Handle Sizes.* Handles should be sized to fit the disks.

5. *Specify Surface Finish and Hardness.* Surface finish and hardness values for gaging and nongaging surfaces should be obtained from Tables 7-8, 7-9, and 7-10 respectively.

6. *Prepare Gage Drawings.* A gage drawing should be prepared in accordance with Refs. 14, 15, 16, and 17.

Downloaded from http://www.everyspec.com

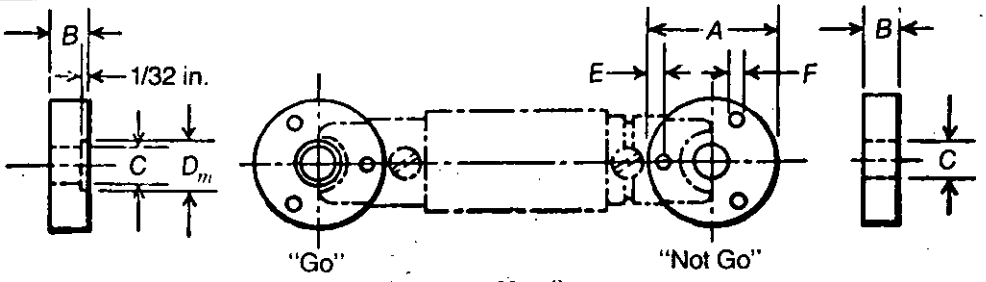

(A) Straight Handle

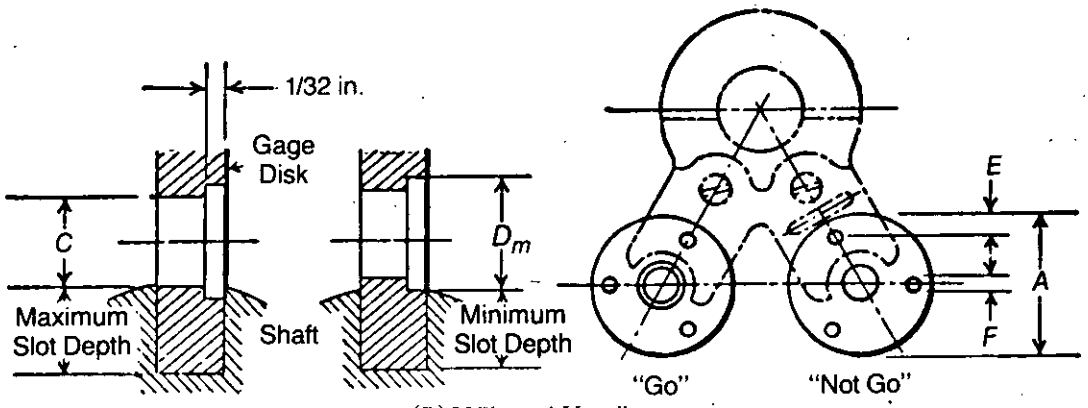

(B) V-Shaped Handle

Key Size, in.	"Go" and "Not Go" Gage			"Go" Gage			"Not Go" Gage	
	A, in.	E, in.	F, in.	B, in.	C, in.	D_m, in.	B, in.	C, in.
1/16 × 1/2	0.5000	0.0781	1/16	0.0615	0.1564	0.1664	0.0630	3/16
3/32 × 1/2	0.5000	0.0781	1/16	0.0928	0.1878	0.1978	0.0943	3/16
1/8 × 1/2	0.5000	0.0781	1/16	0.1240	0.2190	0.2290	0.1255	3/16
3/32 × 5/8	0.6250	0.0938	3/32	0.0928	0.2188	0.2288	0.0943	7/32
1/8 × 5/8	0.6250	0.0938	3/32	0.1240	0.2500	0.2600	0.1255	7/32
5/32 × 5/8	0.6250	0.0938	3/32	0.1553	0.2812	0.2912	0.1568	7/32
1/8 × 3/4	0.7500	0.0938	3/32	0.1240	0.2490	0.2590	0.1255	1/4
5/32 × 3/4	0.7500	0.0938	3/32	0.1553	0.2802	0.2902	0.1568	1/4
3/16 × 3/4	0.7500	0.0938	3/32	0.1863	0.3114	0.3214	0.1880	1/4
5/32 × 7/8	0.8750	0.1094	1/8	0.1553	0.2812	0.2912	0.1568	9/32
3/16 × 7/8	0.8750	0.1094	1/8	0.1863	0.3124	0.3224	0.1880	9/32
1/4 × 7/8	0.8750	0.1094	1/8	0.2487	0.3750	0.3850	0.2505	9/32
3/16 × 1	1.0000	0.1250	1/8	0.1863	0.3114	0.3214	0.1880	5/16
1/4 × 1	1.0000	0.1250	1/8	0.2487	0.3740	0.3840	0.2505	5/16
5/16 × 1	1.0000	0.1250	1/8	0.3111	0.4364	0.4464	0.3130	5/16
3/16 × 1 1/8	1.1250	0.1562	1/8	0.1863	0.3444	0.3544	0.1880	11/32
1/4 × 1 1/8	1.1250	0.1562	1/8	0.2487	0.4070	0.4170	0.2505	11/32
5/16 × 1 1/8	1.1250	0.1562	1/8	0.3111	0.4694	0.4794	0.3130	11/32
1/4 × 1 1/4	1.2500	0.1719	1/8	0.2487	0.4060	0.4160	0.2505	3/8
5/16 × 1 1/4	1.2500	0.1719	1/8	0.3111	0.4684	0.4784	0.3130	3/8
3/8 × 1 1/4	1.2500	0.1719	1/8	0.3735	0.5310	0.5410	0.3755	3/8
1/4 × 1 3/8	1.3750	0.1875	1/8	0.2487	0.4370	0.4470	0.2505	7/16
5/16 × 1 3/8	1.3750	0.1875	1/8	0.3111	0.4994	0.5094	0.3130	7/16
3/8 × 1 3/8	1.3750	0.1875	1/8	0.3735	0.5620	0.5720	0.3755	7/16
1/4 × 1 1/2	1.5000	0.2187	1/8	0.2487	0.4680	0.4780	0.2505	1/2
5/16 × 1 1/2	1.5000	0.2187	1/8	0.3111	0.5304	0.5404	0.3130	1/2
3/8 × 1 1/2	1.5000	0.2187	1/8	0.3735	0.5930	0.6030	0.3755	1/2

From *Machinery's Handbook* by Erik Oberg, Franklin D. Jones, and Holbrook Horton, Industrial Press, Inc., New York, NY. Reprinted with permission. Copyright © by Industrial Press. Inc.

Figure 8-16. Woodruff Keyslot Gages and Dimensions

Downloaded from http://www.everyspec.com

8.5 KNURLS

Knurls are patterns of deep impressions formed on a product surface by displacing material. Usually the impressions on the surface form a grid of teeth. Based on the shape of teeth and the grid, knurls are classified as straight, diagonal, or raised diamond. The number of teeth per unit length counted along the product axis is known as the pitch of the knurl. When the product is cylindrical, the knurls are referred to as cylindrical knurls. ANSI B94.6, *Knurls* (Ref. 19), has standardized knurl dimensions by tolerance class as follows:

1. *Class I.* This class of tolerance is applied to straight, diagonal, and raised diamond knurls for which the outside diameter after knurling is not critical. Such applications are decorative knurling, grips on handles and thumbscrews, and inserts for moldings and castings.

2. *Class II.* This class of tolerance is recommended only for straight knurling in applications for which the outside diameter after knurling is critical.

3. *Class III.* This class of tolerance is for straight knurling only and is recommended when very close control of outside diameter after knurling is required, e.g., when knurling is used to provide a press fit between products.

Inspection of knurls involves checking for type and measuring pitch and outside diameter. The type of knurling is checked visually, and the pitch is measured by standard measuring equipment. The most critical item, the outside diameter after knurling, is inspected by a standard basic gage such as a ring or snap gage.

REFERENCES

1. FED-STD-H28, *Screw Thread Standards for Federal Services*, 1978.
2. MIL-S-8879A, *General Specification for Screw Threads, Controlled Radius Root With Increased Minor Diameter*, 15 March 1973.
3. ANSI B1.7M-1984, *Nomenclature, Definitions, and Letter Symbols for Screw Threads*. The American Society of Mechanical Engineers, New York, NY, 1984.
4. ANSI B1.1-1983, *Unified Inch Screw Threads—UN and UNR Thread Forms*, American National Standard. The American Society of Mechanical Engineers, New York, NY, 1983.
5. ANSI B1.15, *Unified Inch Screw Threads—UNJ Thread Form*, American National Standard. The American Society of Mechanical Engineers, New York, NY, In Press.
6. ANSI B1.2-1983, *Gages and Gaging for Unified Inch Screw Threads*, American National Standard. The American Society of Mechanical Engineers, New York, NY, 1983.
7. ANSI B1.3-1979, *Screw Thread Gaging Systems for Dimensional Acceptability for Unified Screw Threads*, American National Standard. The American Society of Mechanical Engineers, New York, NY, 1979.
8. ANSI B1.13M-1983, *Metric Screw Threads—M Profile*, American National Standard. The American Society of Mechanical Engineers, New York, NY, 1983.
9. ANSI B1.21M-1985, *Metric Screw Threads—MJ Profile*, American National Standard. The American Society of Mechanical Engineers, New York, NY, 1985.
10. ANSI B1.16M-1984, *Gages and Gaging for Metric M Screw Threads*, American National Standard. The American Society of Mechanical Engineers, New York, NY, 1984.
11. ANSI B1.22M-1978, *Gages and Gaging for Metric MJ Screw Threads*, American National Standard. The American Society of Mechanical Engineers, New York, NY, 1978.
12. ANSI B92.1-1970 (including addendum B92.1a-1976), *Involute Splines and Inspection*. Society of Automotive Engineers, Warrendale, PA, 1970.
13. ANSI B47.1-1981, *Gage Blanks*, American National Standard. The American Society of Mechanical Engineers, New York, N.Y., 1981.
14. DOD-STD-100C, *Engineering Drawing Practices*, 1 March 1983.
15. DOD-D-1000B, *Drawings, Engineering, and Associated Lists*, 13 May 1983.
16. ANSI Y14.5M-1982, *Dimensioning and Tolerancing*, American National Standard, Engineering Drawings, and Related Documentation Practices. American Society of Mechanical Engineers, New York, NY 1982.

Downloaded from http://www.everyspec.com

17. MIL-G-10944-B, *Gages, Dimensional Control*, 19 February 1982.
18. ANSI B17.2-1978, *Woodruff Keys and Keyseats*, American National Standard, American Society of Mechanical Engineers, New York, NY, 1978.
19. ANSI B94.6-1966, Revised 1972, *Knurls*, American National Standard, American Society of Mechanical Engineers, New York, NY, 1981.

Downloaded from http://www.everyspec.com

CHAPTER 9
SPECIAL GAGES

This chapter describes and provides design guidance for special gages such as chamber, interchangeability, and profile and alignment. Mechanical comparators, which can be used as special gages, are also described.

9.1 INTRODUCTION

Special gages are designed for unique inspection applications of products. The inspection of the chambers of weapons and ammunition are such unique applications. Chambers of weapons are usually inspected with a set of gages that consists predominantly of male gages known as chamber gages. Rounds of ammunition are inspected with profile and alignment gages. For gage design purposes weapons and ammunition are classified as small caliber (up to and including 40 mm) or large caliber (greater than 40 mm).

The Army also uses another special gage, called the interchangeability gage, which is used to insure that products or assemblies are interchangeable. Although the gage serves the same purpose, it is designed differently depending upon whether or not the product being inspected is to mate with a product designed by using positional tolerances. Many products are still in use that were designed and manufactured before the relatively modern concept of position dimensioning was widely used; an interchangeability gage is especially useful in these situations. If the mating product was designed by using positional tolerances, the interchangeability gage detects potential interference due to irregular weld beads, rivet heads, fillets, radii, or chamfers. The interchangeability gage is designed to guarantee interchangeable assembly among both types of products and, thereby, assure compliance with certain standing requirements, such as Requirement 7, MIL-STD-454 (Ref. 1), for electronic equipment.

Mechanical comparators are devices that use mechanical indicators to compare a product dimension with a preset dimension without making an absolute measurement. These comparators can be configured to compare several dimensions of a product simultaneously. A mechanical comparator is capable of gaging only a limited range of dimensions and, therefore, is classified as a special gage.

9.2 GAGES FOR WEAPON CHAMBERS

Gages for weapon chambers are a set of predominantly male gages. These gages insure that the weapon chamber will receive the round of ammunition and that the tapers in the chamber are in the correct direction, i.e., not reversed. They also insure proper extraction of the cartridge case. Gages for weapon chambers are not to be confused with the alignment gages, which are used in the inspection of ammunition and are covered in par. 9.3.

The gages in the set usually are designed to inspect the maximum and minimum material limits of chamber features. Each of the gages consists of a handle and a mandrel on which one or more straight or tapered plugs are mounted. The plugs of gages for small caliber chambers are solid, whereas those of gages for large caliber chambers are hollow. Soft machine steel spacers are used for proper spacing of the plugs. In gages for large chambers the alignment of gaging elements is insured by grinding the internal diameters of the hollow plugs concentric with the outside diameter and by fitting them snugly on the mandrel. Maximum and minimum steps are ground on the back surface of the plugs for small chambers to check the chamber length. A gaging ring is used to provide the reference surface. Depending upon the gage design, the end of the gage should lie above or below the product for acceptance. Gages to inspect large caliber chambers are usually of the flush pin type. It is a good practice to design all gages for weapon chambers so that the replacement of gaging elements subject to extreme wear is easy.

9.2.1 CHAMBER FEATURES TO BE GAGED

The features of both small and large caliber weapon chambers are shown in Fig. 9-1. The sets of gages required to inspect both small and large caliber chambers are identified in the next paragraph. A complete

Downloaded from http://www.everyspec.com

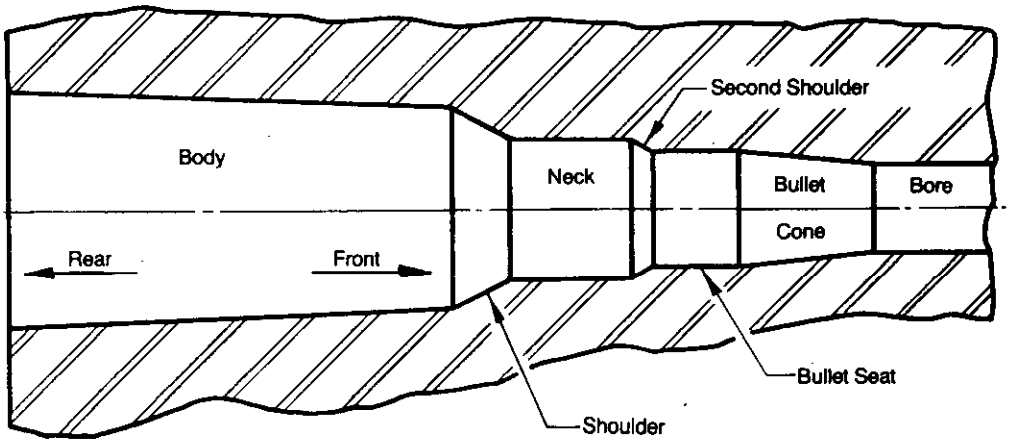

(A) Small Caliber

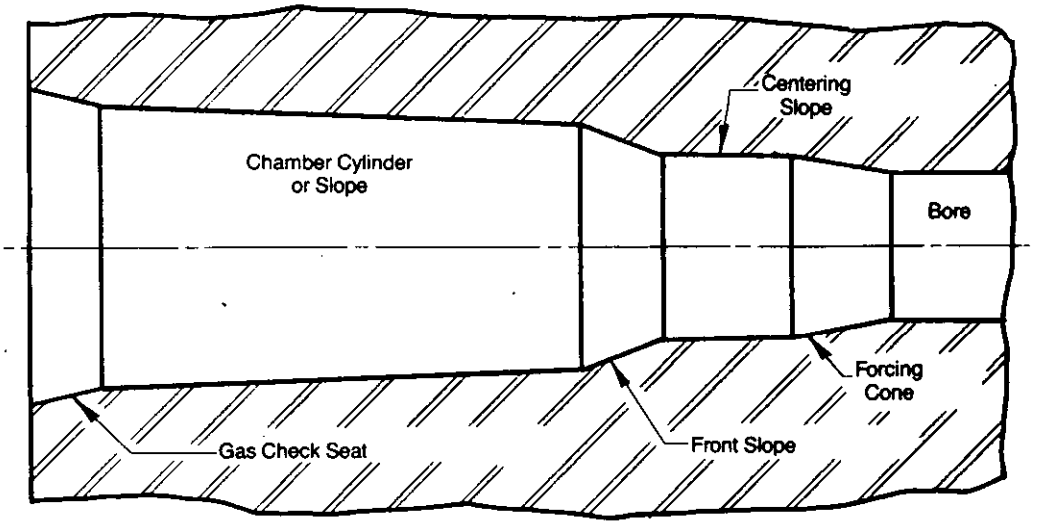

(B) Large Caliber

Figure 9-1. Typical Weapon Chamber Features

inspection of a chamber requires that the diameter and/or taper and location of each feature be inspected individually. A complete gage that could inspect several features simultaneously is not practical because a one-piece construction would only indicate a reject, not where the cause for the reject is located.

9.2.2 DESIGN OF GAGES FOR WEAPON CHAMBERS

The design procedure for gages to inspect weapon chambers depends upon the particular chamber to be inspected; however, a typical step-by-step procedure is suggested:

1. *Identify Required Gages.* Tables 9-1 and 9-2 identify the gages usually required for small and large caliber chamber inspection, respectively. A set of gages for a small caliber chamber is shown in Fig. 9-2. Fig. 9-3 illustrates the inspection of a barrel with a maximum material condition (MMC) gaging element and a gaging ring.

2. *Configure the Gages.* The gages identified in Tables 9-1 and 9-2 must be configured to suit the chamber features being inspected. For small caliber chamber inspection, a gaging ring similar to one of those shown in Fig. 9-2 must be provided if the rear face of the chamber is unusable as a reference surface. The inside diameter of this ring should be approximately 0.002 in. larger than the diameter of the rear of the gage, and the length of this ring should be closely held and must be taken into account in determining the lengths of the gages.

Downloaded from http://www.everyspec.com

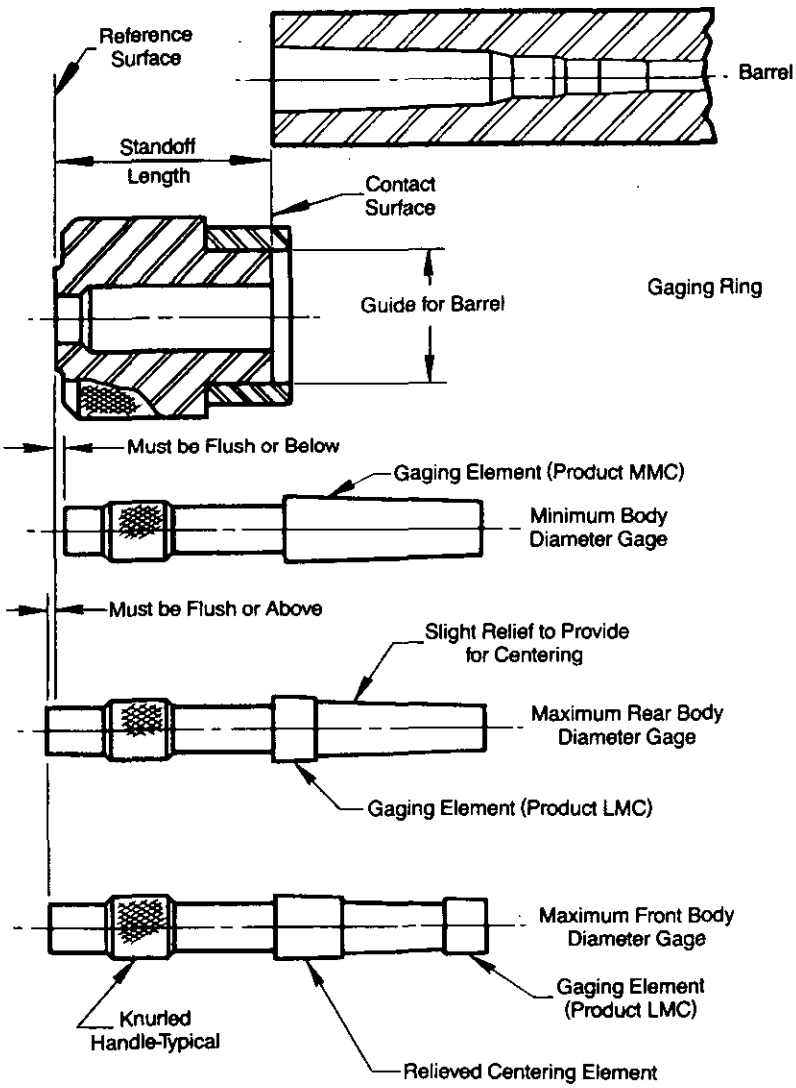

Figure 9-2. Gages for Small Caliber Chamber

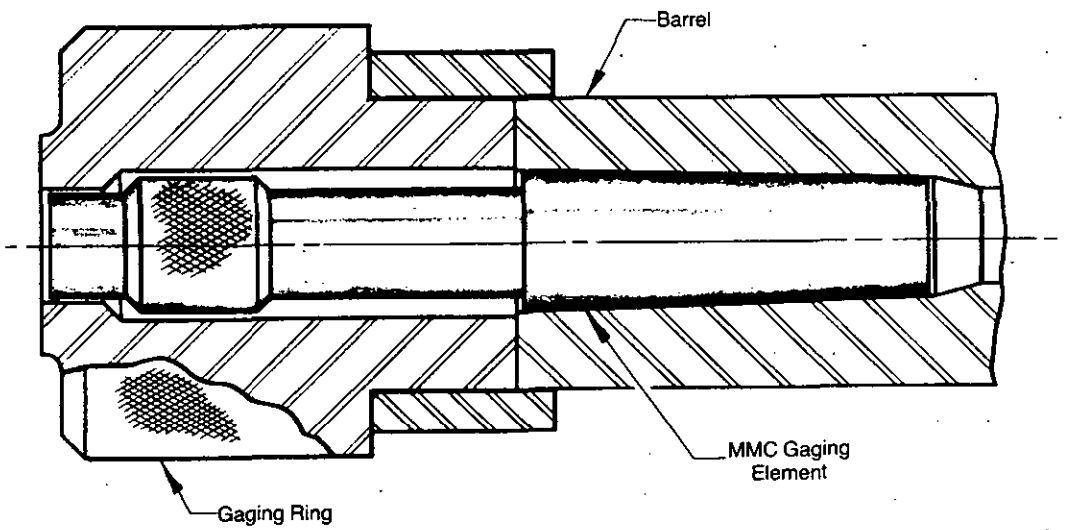

Figure 9-3. Inspection of Barrel With MMC Gaging Element and Gaging Ring

Downloaded from http://www.everyspec.com

TABLE 9-1. GAGES REQUIRED FOR SMALL CALIBER CHAMBER INSPECTION

Feature	Gage	Function
Body	Maximum front body diameter gage	Location and upper size limit of front body diameter
	Maximum rear body diameter gage	Location and upper size limit of rear body diameter
	Minimum complete body gage	Location and lower size limits of front and rear body diameters. Because this gage spans the entire body, it also checks taper.
First Shoulder	First shoulder depth gage	Location and taper of first shoulder. The front and rear diameters are inspected by the neck and body gages, respectively. Because the shoulder is short, the tolerance on the taper is large and a single gage can verify both location and taper.
Neck[a]	Maximum complete neck gage	Location and upper size limit of entire neck feature, including taper
	Minimum complete neck gage	Location and lower size limit of entire neck feature, including taper
Second Shoulder	Second shoulder depth gage	Location and taper of second shoulder
Bullet Seat	Maximum bullet seat diameter gage	Location and upper size limit of cylindrical portion of bullet seat
	Minimum bullet seat diameter gage	Location and lower size limit of cylindrical portion of bullet seat
	Maximum bullet seat depth gage	Location of tapered portion of bullet seat
	Minimum bullet seat depth gage	Location of tapered portion of bullet seat.

[a]NOTE: The neck could be inspected more accurately by using the same three types of gages used to inspect the body, but in small arms chambers the neck is usually too short to permit separate gages (each 3/16 in. long) for the front and rear diameters.

3. *Select Material of Construction.* The plugs and other gaging surfaces usually are made of hardened tool steel.

4. *Calculate Gaging Element Dimensions and Tolerances.* A weapon chamber gage checks the various diameters and lengths of a weapon chamber. General rules for calculating gage element dimensions, their tolerances, and exceptions to their application follow:

a. *Diameters*:

Gage element diameter at any point = Maximum or minimum weapon chamber diameter at that point.

Size tolerance on these diameters is obtained from Table 7-6, Column 2 or 3, for gage element diameter and tolerance on the weapon chamber feature. If justified by the inspection quantity, the wear allowance obtained from Column 1, Table 7-6 may be applied.

b. *Lengths.* The length of each gage element is chosen to suit the product requirement. Typically, the least material condition (LMC) gage elements are a minimum of 3/16 in. long. MMC gage elements, on the other hand, usually span the entire taper form of the chamber and are slightly less than the product feature in length.

5. *Provide Clearances Where Necessary.* The gage should clear all radii and fillets inside the weapon chamber, and clearance chamfers should be provided on the gage for this purpose.

6. *Specify Surface Finish, Hardness, and Knurling.* Surface finish values for all gage surfaces should be

Downloaded from http://www.everyspec.com

TABLE 9-2. GAGES REQUIRED FOR LARGE CALIBER CHAMBER INSPECTION

Feature	Gage	Function
Gas Check Seat (on bag-loaded-type chambers)	Location (flush pin type)	Maximum and minimum location of datum diameter
Chamber Front Slope (on cartridge-loaded-type chambers)[a]	Location (flush pin type)	Location of breech or rear area of slope
	Location (flush pin type)	Maximum and minimum location of datum diameter
	Location (flush pin type)	Location of muzzle or front area of slope
Centering Slope	3 flush-pin-type location gages (same as chamber front slope, above)	Rear area and front area of centering slope and location of datum diameter. NOTE[b] also applies.
Forcing Cone[b]	3 flush-pin-type location gages (same as chamber front slope, above)	Rear area and front area of forcing cone and location of datum diameter
Complete Chamber	Full form plug or tracer gage	Alignment of all chamber features

[a]NOTE Checking front and rear areas of the slope also checks that the taper is within prescribed limits.
[b]NOTE Checking front and rear areas of the slope also checks that the taper is within prescribed limits. In chambers in which the forcing cone is too short in length to use three locating gages, one datum location gage will suffice.

selected from Tables 7-8 and 7-9, and hardness values from Table 7-10. If necessary, knurling on handles may be specified to facilitate handling.

7. *Prepare Gage Drawings and/or Specifications.* Gage drawings, showing details of components and assembly, must be prepared in accordance with DOD-STD-100, *Engineering Drawing Practices* (Ref. 2); DOD-D-1000, *Drawings, Engineering and Associated Lists* (Ref. 3); American National Standards Institute (ANSI) Standard Y14.5M, *Dimensioning and Tolerancing*, (Ref. 4); and MIL-G-10944, *Gages, Dimensional Control* (Ref. 5).

9.3 ALIGNMENT GAGES

Alignment gages are used to inspect the external features of ammunition to insure that the assembled round will fit into the gun chamber. The alignment gage simulates the weapon chamber into which the complete round must fit. (Actually, the gage is smaller.) The nomenclature of the critical components of both small and large caliber rounds is shown on Fig. 9-4. Both types can be procured either assembled (ready to fire) or unassembled. In the case of the unassembled round, the projectile, primer, fuze, cartridge case, and propellant must be assembled before the round is ready to fire. For this reason, two types of gages to check ammunition are in general use. An alignment gage is used to inspect assembled rounds; a cartridge case profile gage is used to inspect cartridge cases only. Even if a round is procured and inspected unassembled, the round is reinspected with a complete round gage after assembly to insure proof of alignment.

Acceptance checks for alignment gages are accomplished by using separate check plug gages that simulate the round to be inspected. Both small and large caliber alignment gages require check plug gages to inspect diameter and taper. In addition, the large caliber gage requires a separate alignment check plug gage to inspect alignment. Because of the construction of small caliber alignment gages, no separate alignment check is needed. Acceptance checks are covered in further detail in the step-by-step design procedures that follow.

Alignment gages are subject to conditions that can cause significant wear. Consequently, a wear-limit check of the gage must be performed periodically. Although these checks can be made with measuring equipment,

Downloaded from http://www.everyspec.com

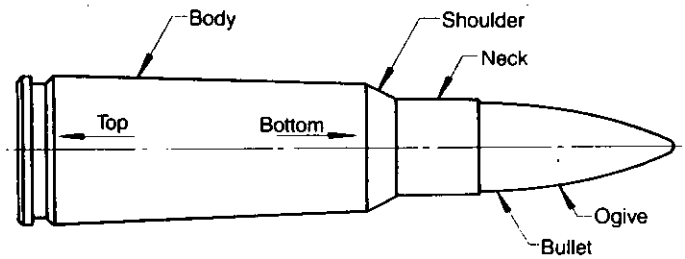

(A) Small Caliber

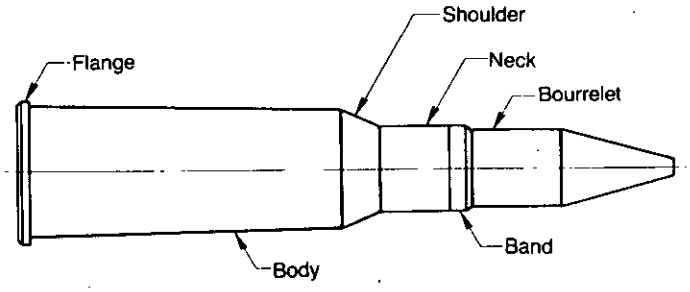

(B) Large Caliber

Figure 9-4. Ammunition Nomenclature

wear-limit gages are routinely used for this purpose. Design of the required wear-limit gages is an integral part of alignment gage design and is included in the step-by-step design procedures for complete round alignment gages and cartridge case profile gages that follow.

9.3.1 DESIGN OF A COMPLETE ROUND ALIGNMENT GAGE FOR SMALL ARMS AMMUNITION

A complete round alignment gage for small arms ammunition is a series of ring sections snugly fitted in a tubular holder. The use of individual ring sections facilitates manufacture of the gage in that the various required rings may be ground separately. This method of fabrication also provides a convenient means of replacing worn out ring elements. Because the rounds vary in shape and size, the design of complete round alignment gages cannot be completely standardized. The following is a typical step-by-step design procedure:

1. *Configure the Gage.* The number of rings and the type of tube are determined in this step. Although gage configuration is specific to the type of round being inspected, the following rings are normally required:
   a. Complete body
   b. Shoulder and neck
   c. Bullet.
2. *Select Material of Construction.* The rings usually are made of hardened tool steel. In cases in which significant wear of the rings is expected, graphitic steel sections or carbide inserts are recommended.
3. *Calculate Gage Element Dimensions and Tolerances*:
   a. *Diameters*:

Ring diameters for body and neck	= Maximum round diameter + 0.6 (minimum weapon chamber − maximum round diameter at the same point).
Ring diameter at bullet section	= Maximum round diameter + 0.8 (minimum weapon chamber diameter − maximum round diameter at the same point).
Tolerance on diameters	= 0.0002 in. applied minus.

- At the bullet lead-in angle. Because clearance is usually greater in the region of the bullet lead-in angle, a tolerance greater than 0.0002 in.—but not to exceed 0.002 in.—may be used in that region.

Downloaded from http://www.everyspec.com

b. *Lengths*:

Minimum length to the datum diameter	= The greater of length to be maximum cartridge datum diameter − 0.05 (tolerance on length to the cartridge datum diameter) or Mean value of the corresponding length on maximum profile cartridge case chamber gage.
Length to the end of neck section	= Maximum length of the cartridge case + 0.6 (minimum length of gun chamber − maximum length of the cartridge case).
Tolerance on lengths	= 0.10 (minimum length of gun chamber −maximum length of cartridge case) but not greater than 0.001 in., applied minus.

Use of this procedure to calculate the minimum length to the datum diameter avoids conflict between the complete round alignment gage and the maximum profile cartridge case gage, if used.

4. *Specify Tapers, Angles, and Radii.* The shoulder angle and the taper on the gage body section should be the same as that on the cartridge case. The angle of bullet lead-in should be the same as that of the weapon chamber. The neck radius of the complete round alignment gage should be the same as the maximum radius of cartridge case with a tolerance of −0.01 in. The absence of interference between the minimum gage and maximum cartridge must be verified by calculation.

5. *Set Guidelines for Acceptance Checks.* Acceptance checks for complete round alignment gages are performed with check plug gages. Acceptance check plug gages must be prepared for the body taper and shoulder angle. An acceptance check plug gage may also be required for the tapered bullet seat when small gage tolerances are necessary. These gages are dimensioned the same as the complete round gage. The rings that constitute the complete round gage are fitted to the check plug gages individually, using the prussian blue transfer process to mark areas of contact.

The tubular holder is sufficiently stiff so that alignment of the inside profile can be maintained by dimensioning the inside diameters concentric and the faces square with the outside diameters of the various ring sections. Therefore, a separate alignment check plug gage is not required.

6. *Set Guidelines for Wear-Limit Checks.* A wear-limit check detects gages worn beyond their wear limits. Wear-limit checks must be provided for the top and bottom of the body, neck, and bullet seat. Dimensions of wear-limit gages are calculated as follows:

Diameter of wear-limit gage at any point	= Minimum diameter of weapon chamber at that point.
Tolerance on diameters	= 0.0002 to 0.001 in., applied minus.

Lengths to points at which diameters must be checked:

a. *Bottom of Body*:

Length to bottom of body of wear-limit gage	= Length of body section of complete round chamber gage − 0.1 in.

b. *Neck*:

Length to neck of wear-limit gage	= Minimum length of cartridge case − 2/3 distance to the point where the neck radius and the neck are tangent.

c. *Bullet Seat*:

Length of bullet seat of wear-limit gage	= The greater of: Length to intersection of bullet lead-in angle and bullet diameter + 0.03 in. or Length to intersection of bullet lead-in angle and bullet diameter + 1/3 distance from the intersection of bullet lead-in angle and bullet diameter to the point at which the

Downloaded from http://www.everyspec.com

bullet diameter and bullet ogive radius are tangent.

Tolerances on wear-limit gage lengths = 0.0002 to 0.001 in., applied minus.

7. *Specify Surface Finish and Hardness.* Surface finish values for all gage surfaces should be selected from Tables 7-8 and 7-9, and hardness values from Table 7-10.

8. *Prepare Gage Manufacturing Drawings.* Gage manufacturing drawings showing details of gage components and assembly must be prepared in accordance with Refs. 2, 3, 4, and 5.

9.3.2 DESIGN OF A COMPLETE ROUND ALIGNMENT GAGE FOR LARGE CALIBER AMMUNITION

A complete round alignment gage for large caliber ammunition generally is made up of a series of ring sections aligned and enclosed in a rigid, tubular-shaped body. Individual ring sections are preferred so that the various tapers can be ground separately and thereby facilitate manufacture. This method of fabrication also provides a convenient method of replacing worn ring elements. The ring sections usually are made from hardened tool steel. A slide must be provided at the rear of the gage to check the perpendicularity of the cartridge case flange with the axis of the round. The following is a typical step-by-step design procedure:

1. *Configure the Gage.* The number of rings, the type of tube, and the need for slides at the rear end of the gage are determined in this step. Although gage configuration is specific to the type of round being inspected, the following rings normally are required:

a. Complete body
b. Shoulder and neck
c. Bourrelet.

Because gages for self-propelling ammunition such as mortars and rockets are designed to check alignment only, the gage diameter is the same throughout its length and a slide at the end of the gage is not required.

2. *Select Material of Construction.* The rings usually are made of hardened tool steel. In cases in which significant wear of the rings is expected, graphitic steel sections or carbide inserts are recommended.

3. *Calculate Gage Element Dimensions and Tolerances*:

a. *Diameters*:

Gage element diameter at any point = The greater of:
Maximum round dimension at that point + 0.6 (minimum weapon chamber − maximum round diameter at the same point)
or
Minimum weapon chamber diameter at that point − 0.002 in.

Exceptions to the rules are

- At the bourrelet. The 80% rule is applied as follows to calculate gage element diameter at this point:

Gage element diameter at bourrelet = Maximum round diameter + 0.8 (minimum chamber diameter − maximum round diameter).

- At the cartridge case neck:

Gage element diameter at the cartridge case neck = The greater of:
Maximum round diameter + 0.6 (minimum weapon chamber diameter − maximum round diameter)
or
Minimum weapon chamber − 0.002 in.
NOTE: The maximum round diameter for purposes of this calculation is the larger of the neck of the cartridge case of an assembled round or the rotating band of the projectile.

Downloaded from http://www.everyspec.com

Tolerance on diameters = 0.10 (minimum weapon chamber diameter − maximum round diameter) applied minus, but not less than 0.0002 in. nor greater than 0.0006 in.

b. *Lengths*:

Length of gaging element at any point = Maximum length of assembled round at that point + 0.6 (minimum length of gun chamber at that point − maximum length of assembled round at that point).

Exceptions to the rules are:

- Cartridge Case Flange. To allow stamping of the flange and clearance in the gun, the following rules are applied to calculate the length of the section of the gage receiving the cartridge case flange:

Length of section receiving brass cartridge case flange = Maximum thickness of flange + 0.004 in.

Length of section receiving steel cartridge case flange = Maximum thickness of flange + 0.006 in.

Length of section receiving recoilless ammunition cartridge case flange = Maximum thickness of flange + 0.60 (maximum thickness of flange − minimum head space of gun).

If the preceding rule results in interference between the round and the gage, a different gage length must be selected. If the gage is to function properly, the gage length must lie between the minimum length of the weapon chamber and the maximum length of the case. The preparation of a large-scale layout of the point of interference will assist in the selection process.

The tolerances on lengths may vary from 0.0001 to 0.001 in. depending upon the length. As a general rule, however, the tolerance should not be greater than 10% of the maximum variation of the corresponding dimension on the assembled round.

4. *Set Guidelines for Acceptance Checks*. The acceptance check is performed by check plug gages that inspect the internal tapers on the body and shoulder rings of the complete round alignment gages. These plugs are the male counterparts of the rings. The rings that constitute the complete round gage are fitted to the check plug gages individually, and the prussian blue transfer process is used to mark areas of contact. Acceptance checks for large caliber complete round alignment gages differ from those for small caliber alignment gages in that a separate alignment check must be performed. The alignment check is performed with a check plug gage that consists of the various straight and tapered acceptance check plugs mounted simultaneously on a straight mandrel. The assembly simulates the profile of the complete round and is dimensioned in the same manner as the complete round gage.

5. *Set Guidelines for Wear-Limit Checks*. A wear-limit check detects gages worn beyond their limits. For large caliber alignment gages, wear-limit checks must be conducted for the top and bottom of the body, neck, and bore-gaging elements. Dimensions of wear-limit gages are calculated as follows:

a. *Diameters*:

Diameter of wear-limit gage at any point = Minimum diameter of weapon chamber at that point.

Tolerances on diameters:

(1) For diameters less than or equal to 1.0 in. = 0.0001 in. applied minus

(2) For diameters greater than 1.0 in. = 0.0002 in. applied minus

b. *Lengths to Points at Which Diameters Must be Checked*:

(1) Bottom of Body:

Length to bottom of body of wear limit = Equivalent length to gun chamber − 0.1 in.

(2) Top of Body

(3) Neck:

Length to neck of wear-limit gage = Minimum length from the end of the round to the rotating band, i.e. minimum length of cartridge case.

Downloaded from http://www.everyspec.com

(4) Bore:

(a) For Projectiles With a Bourrelet Diameter Equal to Body Diameter:

Length to bore of wear-limit gage	= Minimum length to the point forward of the rotating band + one third the minimum length of the cylindrical portion of the body.

(b) For Projectiles With a Bourrelet Diameter Larger Than Body Diameter:

Length to bore of wear-limit gage	= Minimum length to the rear edge of the bourrelet

(c) Tolerances on Lengths:

For lengths less than 6.0 in.	= 0.001 in. applied minus
For lengths greater than 6.0 in. but less than 25.0 in.	= 0.002 in. applied minus
For lengths greater than 25.0 in.	= 0.003 in. applied minus.

6. *Specify Surface Finish and Hardness.* Surface finish values for all gage surfaces should be selected from Tables 7-8 and 7-9, and hardness values from Table 7-10.

7. *Prepare Gage Drawings and/or Specifications.* Gage drawings showing details of components and assembly must be prepared in accordance with Refs. 2, 3, 4, and 5.

9.3.3 CARTRIDGE CASE PROFILE GAGES

The cartridge case profile gage is used to insure that the maximum profile cartridge case does not exceed the maximum virtual size specified. The construction of this gage, which consists of several properly aligned rings enclosed in a tubular shell, is very similar to that of a complete round alignment gage.

The design of the cartridge case profile gage involves calculating diameters and lengths for the rings required for the particular cartridge case being inspected. A typical step-by-step procedure follows:

1. *Configure the Maximum Cartridge Case Profile Gage.* The number of rings and length and diameter of the tube to suit the cartridge case being inspected are determined in this step. Slides will be incorporated in cannon caliber cartridge case profile gages for the same conditions for which slides are used in complete round gages.

2. *Select Material of Construction.* The rings usually are made of hardened tool steel. Graphitic steel sections or carbide inserts are recommended when significant wear is expected.

3. *Calculate Gage Dimensions and Assign Tolerances and Wear Allowances*:

The following relationships should be used to calculate the principal dimensions of the maximum cartridge case profile gage:

Diameters of gage elements for body sections	= Maximum virtual size of cartridge case feature − wear allowance obtained from Table 7-6 for cartridge case feature size and its tolerance.
Tolerance	= Tolerance from column 2, Table 7-6, for cartridge case feature size and tolerance, applied minus.
Minimum length to the gage datum diameter (smaller caliber gages)	= Maximum length to the cartridge case datum diameter − 5% of product tolerance on the same length.
Length of section receiving brass cartridge case flange (cannon caliber gages)	= Maximum thickness of flange + 0.004 in.
Length of section receiving steel cartridge case flange (cannon caliber gages)	= Maximum thickness of flange + 0.006 in.
Length of section receiving recoilless ammunition cartridge case flange (cannon caliber gages)	= Maximum thickness of flange + 0.60 (maximum thickness of flange − minimum head space of gun).

Generally, no wear allowance is required on cartridge case profile gages for lacquer-coated cases because the lacquer will reduce friction, which also reduces wear.

Downloaded from http://www.everyspec.com

4. *Set Guidelines for Acceptance Checks.* Acceptance checks for cartridge case profile gages are performed with check plug gages as previously described in the procedures for complete round gages. (See Step No. 5, par. 9.3.1.2, for small caliber and Step No. 4, par. 9.3.2.2, for large caliber gages.)

5. *Set Guidelines for Wear-Limit Check.* Wear-limit checks must be provided for the neck and the top and bottom of the body. Dimensions of wear-limit gages are calculated as follows:

Diameter of wear-limit gage at the neck	= Maximum cartridge case virtual diameter at the neck + 0.05 (minimum weapon chamber diameter at the neck − maximum cartridge case virtual diameter at the neck).
Diameter of wear-limit gage at the top and bottom of body sections	= Maximum diameter of cartridge case at that point + 0.5 (minimum weapon chamber diameter at that point − maximum cartridge case diameter at that point).

Lengths to points at which diameters must be checked:

Length to neck of wear-limit gage	= Minimum length of cartridge case − 2/3 distance to the point where the neck radius and the neck are tangent.

6. *Specify Surface Finish and Hardness.* Surface finish values for all gage surfaces should be selected from Tables 7-8 and 7-9, and hardness values from Table 7-10.

7. *Prepare Gage Drawings and/or Specifications.* Gage drawings showing details of components and assembly must be prepared in accordance with Refs. 2, 3, 4, and 5.

9.4 INTERCHANGEABILITY GAGES

As the name implies, interchangeability gages are used to insure that products or assemblies are interchangeable. In one instance such a gage is used for the special purpose of insuring interchangeability between the product to be inspected and an older product that was designed and manufactured before the relatively modern concept of position dimensioning was widely used. In this situation proper assembly is an implied requirement and the gage designed must verify compliance with this requirement. Although an interchangeability gage fulfills this requirement, it can guarantee interchangeability only in assembly; dynamic performance of the assembly cannot be assured. In cases in which the product being inspected is to mate with a product designed by using positional tolerances, the purpose of the interchangeability gage is to detect potential interference from features such as weld beads, rivet heads, fillets, radii, or chamfers that may not have been inspected individually. The interchangeability gage simulates the mating part in all aspects and thus encompasses all inspection requirements, both expressed and implied. Consequently, the interchangeability gage is used for the final functional inspection of the product.

The major task in guaranteeing the interchangeable assembly of products is to establish the most critical case—usually at minimum clearance—and to insure that the new product does not exceed the limits set by this case. The 40% rule commonly is used for this purpose, and use of this rule leaves a minimum neutral zone of 20% of the minimum clearance between mating products and thereby guarantees proper assembly. The step-by-step procedure for designing an interchangeability gage with the 40% rule follows:

1. *Determine the Minimum Clearance Between Mating Products.* A thorough examination of the functioning of the assembly is required to determine the minimum clearance between mating products because the rest position is not necessarily the minimum clearance position.

2. *Configure the Gage.* The gage must be configured to suit the product.

3. *Select Material of Construction.* Usually tool steel is chosen for gaging surfaces, but other materials may be selected from Table 7-1 for longer gage life and for other gage parts.

4. *Calculate Gage Element Dimensions and Tolerances:*

a. *For Male Product Features:*

Basic female gage element size	= Product male feature size + 0.4 (clearance) (the 40% rule).

Downloaded from http://www.everyspec.com

Gage maker's tolerance should be calculated by taking 10% of the minimum clearance between the mating products. The direction of tolerance should be negative (applied minus).

b. *For Female Product Features*:

Basic male gage element size = Product female feature size − 0.4 (clearance).

The gage maker's tolerance is 10% of the minimum clearance. The direction of this tolerance must be positive (applied plus).

A positional tolerance equal to 10% of the minimum clearance is also allowed on positioning of all gage elements.

5. *Establish Dimensions of the Nonfunctioning Parts.* The dimensions of nonfunctioning parts of the gage should insure the structural integrity of the gage and also meet any additional performance requirements.

6. *Specify Surface Finish, Hardness, and Knurling.* Surface finish values for all gage surfaces should be selected from Tables 7-8 and 7-9, and hardness values from Table 7-10. If necessary, knurling on handles may be specified to facilitate handling.

7. *Prepare Gage Manufacturing Drawings.* Manufacturing drawings that show details of the gage components as well as assembly should be prepared for these special gages in accordance with Refs. 2, 3, 4, and 5.

9.5 MECHANICAL COMPARATORS (COMPARATOR GAGES)

A mechanical comparator, or comparator gage, mechanically compares an unknown dimension with a preset, known size. Most mechanical comparators are equipped with a base; one or more probes that make contact with the standard, master, or product; and one or more devices that indicate the relative movement of the probes. A single dial indicator mounted on a stand and used on a surface plate is basically a mechanical comparator. The accuracy of mechanical comparators depends on the accuracy of their bases, work-holding devices, and indicators.

Several types of comparators are commercially available. Some are equipped with special work-holding devices, and others have unique configurations to accommodate special products. The two principal types of commercially available mechanical comparators are the bench comparator and portable comparator; both are discussed in the paragraphs that follow.

9.5.1 BENCH COMPARATORS

As the name implies, bench comparators are set up for use on a workshop bench. They are equipped with an adjustable base, a column, and an indicator. The base, whose flatness and surface finish are comparable to those of a surface plate, also serves as an accurate reference surface. The base is known as the anvil, or platen, and it provides a means for locating the desired product surface perpendicular to the indicator spindle movement. The position of the indicator is adjustable with respect to the base, and usually the adjustment is accomplished in two stages: A rough positioning of the indicator along the comparator column is followed by a fine adjustment of the indicator within the indicator holder. Some comparators have an auxiliary adjustable staging table for the fine adjustment. A comparator is preset by mounting a standard, master, or setting gage in the same fashion as the product will be mounted and setting all indicator readings to zero. The most common types of bench comparators, the C-frame and plate comparators, are discussed in the subparagraphs that follow.

9.5.1.1 C-Frame Bench Comparators

The base, column, and arm mounted on the column of a C-frame comparator—as shown in Fig. 9-5—forms the shape of a "C". The indicator holder is mounted on the arm, which can be moved up or down along the column and locked in any position by a screw or clamp. Movement of the arm is used for rough positioning of the indicator, and the fine adjustment is accomplished by moving the indicator within the indicator holder. The common commercially available C-frame comparators have a vertical capacity of up to 11 in. and a manufacturer's claimed accuracy of between 0.01 to 0.00005 in.

The basic C-frame comparator, complemented by accessories, can accommodate several different product configurations. Judicious selection of the accessories can substantially shorten staging time and improve

Downloaded from http://www.everyspec.com

accuracy. The most commonly used accessories are

1. Serrated anvils, which are used instead of flat bases to prevent penetration of dust or foreign particles between the product and the reference surface

2. Work-holding centers, such as those shown in Fig. 9-6, which are used to allow the measurement of runout; these centers can hold products up to 7.0 in. in diameter and 29.0 in. long.

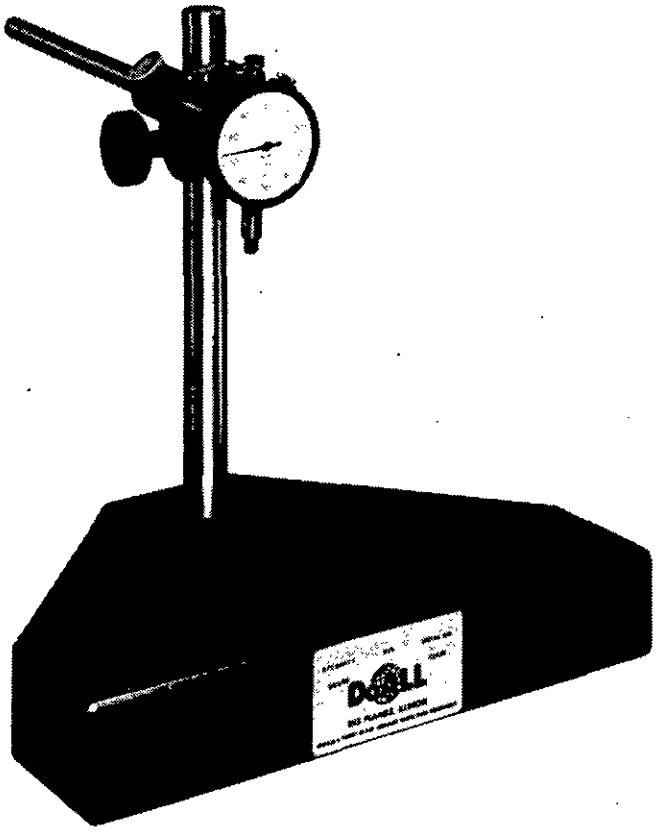

Figure 9-5. A C-Frame Comparator

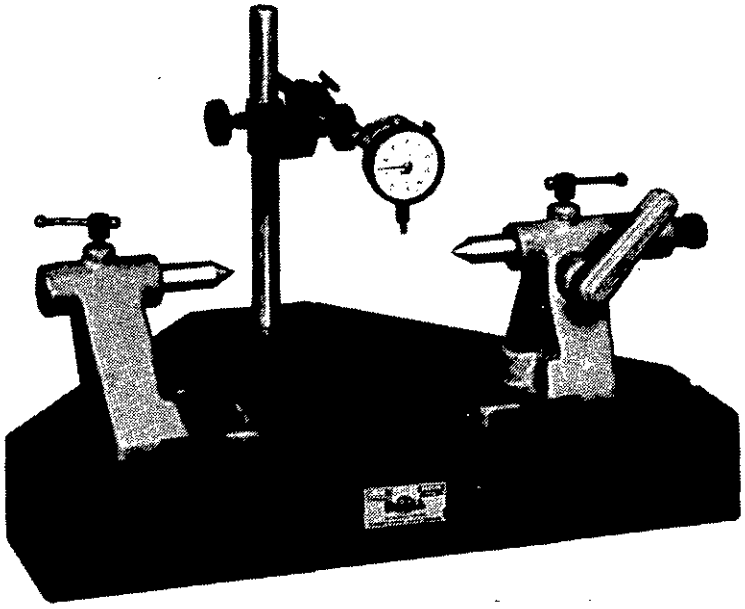

Figure 9-6. Work-Holding Centers for C-Frame Comparator

Downloaded from http://www.everyspec.com

3. Adjustable backstops, which are used to insure that the product and indicator spindle axis are in the same vertical plane

4. V blocks, which are used for locating and aligning cylindrical parts.

Usually, the contact points or probes of bench comparator indicators are spherical hardened steel points. Spherical points are preferred because they provide a point contact. Other point shapes—illustrated in Fig. 9-7—may be selected depending on the product configuration. The expected usage of the comparator determines the material—chrome-plated hardened steel, cemented carbide, sapphire, or diamond—of the contact points. The chrome plating improves the wear life of a hardened steel point by approximately 10 times; and carbide, norbide, sapphire, and diamond points have a wear life of approximately 100 to 1000 times that of a hardened steel contact point.

9.5.1.2 Plate Comparators (Plate Gages)

A plate comparator is a bench comparator with a slanted staging plate for locating and mounting the product. This comparator commonly is used for rapid inspection of flat and relatively thin products that require gaging in a plane parallel to at least one of the product surfaces. The staging plate is equipped with wear surfaces in the form of strips or buttons of hardened steel or carbide to increase wear life.

The staging plates have slots equipped with sensing probes and adjustable locating stops that hold the product securely on the plate. The plate comparator shown in Fig. 9-8 has slots in the shape of a cross. Other comparators have slots in the form of a Y, an inverted Y, or a T. A mechanism that allows quick retraction of the contacting members facilitates mounting and removal of the product. Centering is necessary for accurate measurement of internal or external diameters of circular products. The T-slot configuration is preferred for this application because measurements can be made by the contacting members in the slots opposite each other while the third contacting member automatically centers the product. Typical commercially available plate comparators can measure internal diameters up to 9.0 in. and external diameters up to 9.5 in. with an accuracy of 0.0001 in.

9.5.2 PORTABLE COMPARATORS

Portable comparators are hand-held comparators that can be moved to a product for gaging. These comparators—classified according to whether they gage external or internal dimensions—consist of an indicator, contact points, and a handle.

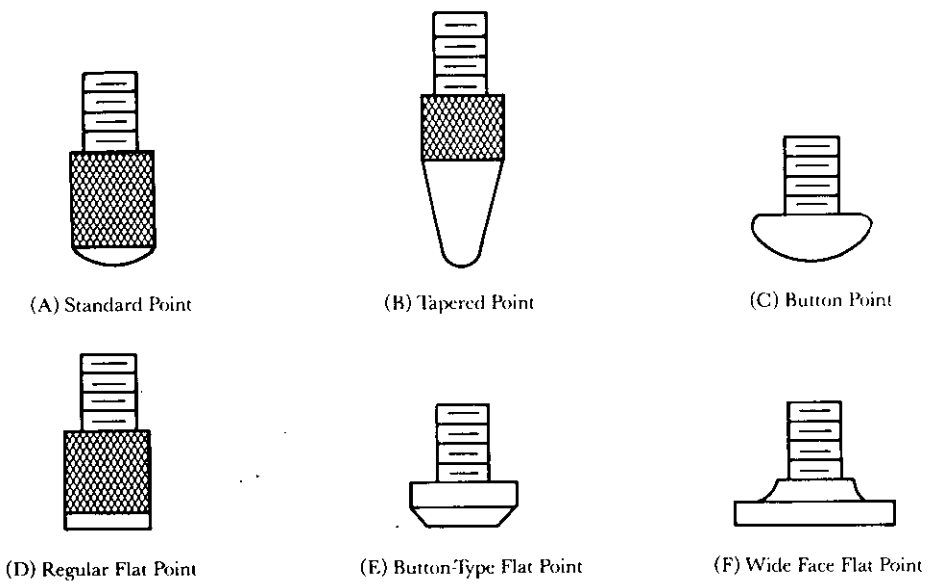

Figure 9-7. Various Shapes of Contact Points for Bench Comparators

Downloaded from http://www.everyspec.com

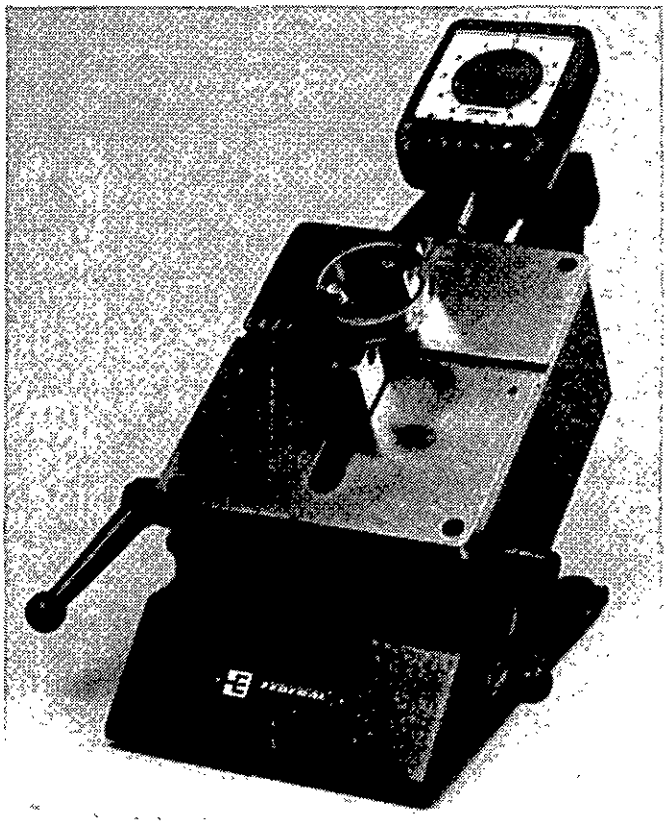

Figure 9-8. Plate Comparator

9.5.2.1 Portable Comparators for External Dimensions

Portable comparators for external dimensions consist of a fixed anvil, a movable contact mounted on a C frame, and an indicator. The indicator senses and displays the magnitude of contact movement. These comparators are sometimes known as indicating snap gages because of the similarity of construction. Unlike the bench comparators, the portable comparators have the fixed anvil above, rather than below, the sensitive movable contact. In some of the comparators the fixed anvil is also adjustable to increase the capacity of the instrument. As shown in Fig. 9-9, the portable comparator is equipped with a backstop that has a face slanted at 45 deg to hold the product in the same fashion as a V block. These comparators are preset with a standard, master, or setting gage in the same manner as the bench comparator.

9.5.2.2 Portable Comparators for Internal Dimensions

Portable comparators for internal diameters are equipped with a fixed and a movable anvil. This feature allows contact with the surface of an internal feature at two opposite points. An indicator senses and displays the movement of the movable anvil from its preset position. A portable comparator for measuring internal dimensions is shown in Fig. 9-10.

Portable comparators used for measuring internal diameters, such as holes and bores, are also known as bore gages. Proper centering of the gage is essential for accurate measurement of bores; therefore, some bore gages are supplied with two fixed anvils and a sensitive, movable contact point 120 deg apart.

Downloaded from http://www.everyspec.com

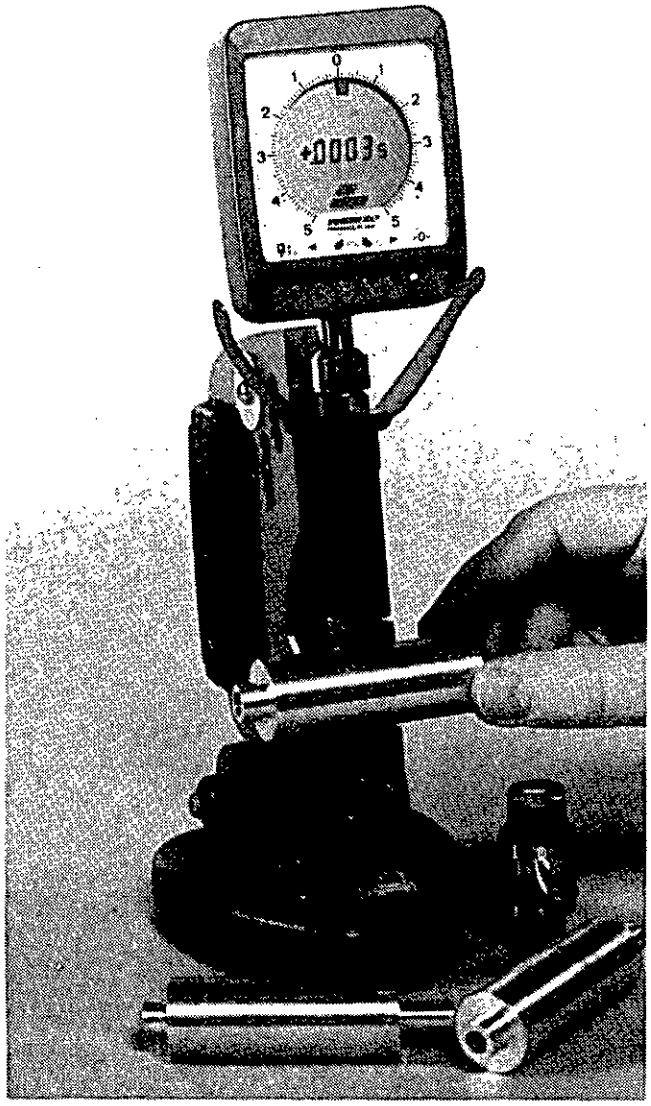

Figure 9-9. Portable Comparator for External Dimensions

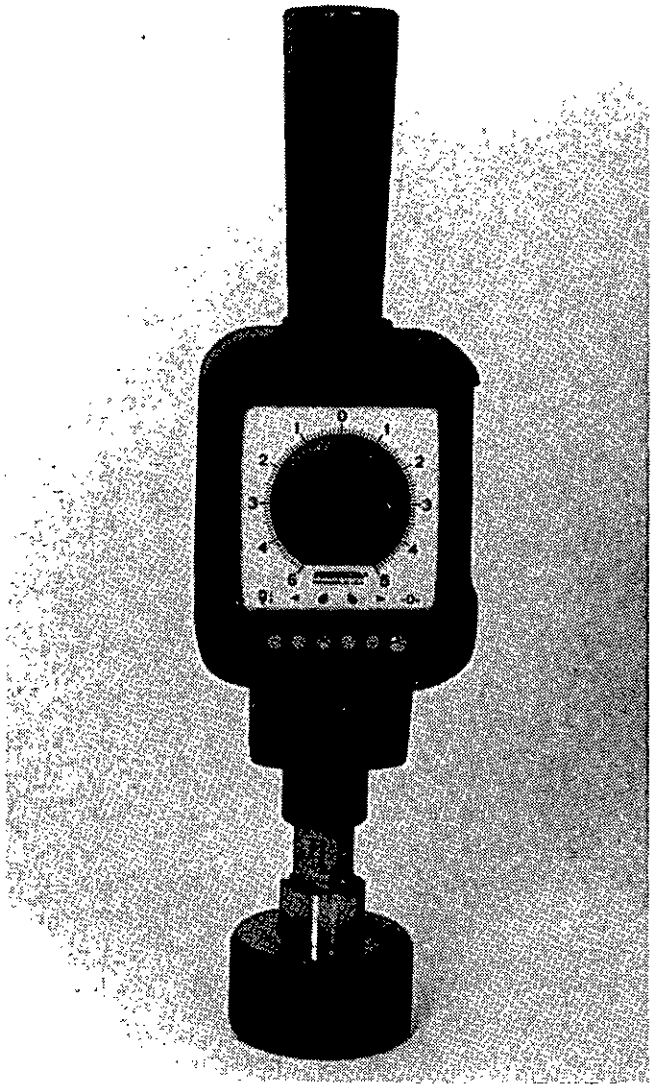

Figure 9-10. Portable Comparator for Internal Dimensions

REFERENCES

1. MIL-STD-454H, *Standard General Requirements for Electronic Equipment*, 10 January 1983.
2. DOD-STD-100C, *Engineering Drawing Practices*, 1 March 1983.
3. DOD-D-1000B, *Drawings, Engineering and Associated Lists*, 18 August 1987.
4. ANSI Y14.5M-1982, *Dimensioning and Tolerancing, American National Standard, Engineering and Related Documentation Practices*, American Society of Mechanical Engineers, New York, NY 1982.
5. MIL-G-10944B, *Gages, Dimensional Control*, 19 February 1982.

Downloaded from http://www.everyspec.com

CHAPTER 10
AUTOMATED INSPECTION EQUIPMENT

This chapter provides an overview of automated inspection equipment. Considerations involved in selecting or designing automated inspection equipment are highlighted. Controllers, analyzers, and dual systems are described for computer-aided inspection systems. Software quality factors and related criteria to be used to evaluate them are listed. Design considerations, quality assurance techniques, and software testing techniques also are discussed.

10.1 INTRODUCTION

10.1.1 AUTOMATED INSPECTION EQUIPMENT

The use of automated inspection systems has increased tremendously in the last decade due to greater manufacturing accuracy requirements, the economic benefits of reject-free production, the advantages of in-process controls, and the need to keep up with the high stock removal rates of automatic machines with very short manufacturing cycles. The main function of an automated inspection system is to measure or gage the final or specified parameters of mass-produced products. The system may also send signals to the production line for necessary actions based on the measurements. The specific task the automatic inspection system must perform usually depends on its location in the production line. Based on this location, the inspection is referred to as in-process, stop cycle, in-line post-process, or post-process inspection; each is discussed.

In-process automatic inspection involves monitoring product parameters while the product is being formed or machined and signaling for stoppage or resetting or readjustment of the process to keep the product parameters within the tolerance zone. This system virtually eliminates the need for rework, increases throughput, and allows close control of the product parameters.

The second type of automatic inspection—stop-cycle inspection—is used most widely with external, internal, and centerless grinding machines. The measuring or gaging device is employed at the beginning of the manufacturing cycle, and it controls the speeds and feeds of the tools until the desired values of the product parameters are reached, at which time it stops the cycle.

The third type of automatic inspection—in-line post-process inspection—is mostly employed in automatic transfer line production where products are automatically transferred between workstations. In-line inspection stations equipped with automatic inspection systems check to determine whether the previous operations have been performed properly. These stations may also monitor production from multiple production stations, i.e., keep track of the source station for each product and send signals for readjustment or stoppage of any or all stations based on their findings.

In the fourth type of automatic inspection—post-process inspection—the inspection equipment is located at the end of the production line. This type of inspection usually involves sorting of the products. Simple versions of the system sort the products into acceptable and rejectable units. Other versions can sort the products into acceptable, rejectable, and salvageable products. More sophisticated machines can separate the products into size classes for selective assembly.

Depending upon the degree of automation, an automated inspection system may be able to load, orient, transfer, and unload the product. It must be capable of either measuring or gaging product parameters to determine whether the part is acceptable, it also must be capable of protecting itself from damage by an incorrectly oriented incoming product, and it must also be synchronized with the material handling cycle, so that the inspection probes are advanced at the right time. It must be capable of interpreting the incoming signals about product parameters and of sending out appropriate signals for proper response. These capabilities may be built into an automated inspection system by using one or a combination of several units that include mechanical, hydraulic, pneumatic, electrical, optical, electronic, and computer-aided devices. Selection and procurement of an automated inspection system should involve an evaluation of design,

Downloaded from http://www.everyspec.com

acceptance, operating, and maintenance considerations. These considerations are briefly discussed in Section I.

10.1.2 COMPUTER-AIDED INSPECTION SYSTEMS

Computer-aided inspection systems (CAIS) consist of positioning controllers, sensing devices, signal generators, output devices, and the required hardware and software necessary to control the complete system. The configuration, capabilities, and functions of the hardware and software are so integrated and varied that it is essential to treat the combination of hardware and software as a system in designing or selecting CAIS.

The quality of computer software is a measure of how well it meets the user's requirements when used with the specified hardware. Quality depends on numerous attributes such as the significant aspects of programming, style, complexity, data handling, and documentation. Therefore, in defining quality of software it is essential to address the combined effect of all the attributes on its usefulness. Thus software quality can be defined as a composite of all attributes that describes its degree of usefulness and excellence.

SECTION I. HARDWARE

10.2 DESIGN CONSIDERATIONS

A brief discussion of the design considerations that affect the selection of automated inspection system is presented in the paragraphs that follow.

10.2.1 "FAIL-SAFE" CAPABILITY

"Fail-safe" capability, as it refers to automated inspection equipment, means that the system should not be capable of "accepting" a rejectable product under any circumstance. Because acceptance of a rejectable product can be potentially dangerous or expensive, an automated inspection system should have a built-in capability not to accept rejectable products even when a unit in the inspection system has failed. This can be achieved by designing the system such that a positive action has to be taken to accept a product. Then in case of a failure in the system, the positive action is not taken and no product will be accepted. An example of such a system is a chute that opens when the inspection equipment sends a favorable "accept" signal and allows the acceptable product to drop. In case of a failure of any unit in the system, the chute remains closed; therefore, no products are accepted. Also the equipment should be able to count the total number of parts tested and the number of rejects.

10.2.2 MAINTAINABILITY

The inspection system should be designed for easy preventive and corrective maintenance and thus avoid expensive down time. Modularization; simplicity in design; maximum use of standard, readily available components; good debugging capability; easy accessibility; and adequate and easy-to-follow troubleshooting documentation are some of the factors that improve maintainability. An analysis should be performed to determine whether built-in test equipment (BITE) is cost-effective in meeting the system reliability, availability, and maintainability (RAM) requirements. Several of the more important factors are discussed in the paragraphs that follow.

10.2.2.1 Modular Design Concept

The modular design concept involves designing a system with separate and independent units that can be tested and replaced without affecting the performance of or depending on other system units. Such modular system units facilitate and speed up troubleshooting and maintenance and also reduce maintenance labor costs.

10.2.2.2 Debugging Capability

Debugging—the process of isolating and eliminating the causes of system malfunction or failure at the time of installation and acceptance—is an important step toward achieving the desired system performance.

Downloaded from http://www.everyspec.com

Therefore, debugging capability, i.e.,features that make it easy to isolate and eliminate "bugs", should be built into the system at the design stage, and the debugging procedures must be contained in detailed and well-prepared documents. Also a sufficient number of points in the system should be identified for testing to facilitate diagnosis of problems.

10.2.2.3 Simplicity

The automated inspection system should have the simplest possible design and configuration that will meet the performance requirements. More sophistication than necessary will cost more due to higher capital, training, and maintenance costs.

10.2.3 INTERFACING

Automated inspection systems are usually used in automatic transfer lines that have loading, unloading, and other material handling devices that operate synchronously with the manufacturing operation. The inspection system should be designed to synchronize correctly in the cycle and also connect and work properly with the material handling system and with other electrical or electronic devices. The interface design should be well-documented.

10.2.4 VERIFICATION AND CALIBRATION CAPABILITY

Accuracy is defined as the closeness of test measurements to the true (laboratory) measurement. Accuracy is normally defined by two factors, systematic error (or bias) and precision (reproducibility). Systematic error is the difference between the average (mean) reading in a series of measurements and the true measurement. Precision is a measure of the closeness of a series of measurements. For the purposes of this handbook, precision will be defined as the standard deviation of a group of readings of a given characteristic.

The automatic inspection system should be designed so that its accuracy is readily verifiable. This includes initial calibration, periodic verification, and recalibration. Depending on the need, this capability could be manual, semiautomatic, or fully automatic. A system that employs manual calibration and/or verification must provide a calibration cycle to facilitate inspection and retrieval of standards. In semiautomatic systems the verification and calibration functions are performed automatically on command from the operator. In a fully automatic system these functions are performed automatically at a predetermined frequency without any external guidance. During both semiautomatic and automatic verification or calibration, an incorrect measurement should cause the unit to shut down, signal line personnel, and cause all parts accepted since the last valid verification or calibration to be reinspected.

10.2.5 SECURITY CONSIDERATIONS

One of the causes of inspection system malfunction is error in adjustments done by unauthorized or untrained persons. The controls used for permanent adjustments to the inspection system should be adequately isolated and secured to prevent access by such persons.

10.2.6 INDEPENDENT CONTROLS

When the material handling system, the manufacturing system, and the inspection system work in tandem, a malfunction or failure of one of these systems may necessitate bypassing the system and substituting an alternate method. If all three systems are operated by a single control, the malfunction or failure of one system would result in stoppage of the entire system. Providing independent controls for each system makes the bypassing of one of the systems possible. If independent controls are provided in the design, redundant subsystems or some other method of replacing the functions of the failed subsystem must be provided.

10.2.7 SYSTEM SAFETY

Safety of personnel, products, and equipment should be prime considerations in automated inspection system design. The principles of safety that are applicable to any other industrial equipment should also apply to these systems. The system should be capable of protecting itself from damage due to an incorrectly oriented

Downloaded from http://www.everyspec.com

incoming product. This capability can be achieved by using sensors to determine part orientation prior to entering the system and, if necessary, either repositioning the part or stopping the system.

10.2.8 ENVIRONMENTAL CONDITIONS

To guarantee continuous and adequate performance, all the components in the system must work well even under the worst environmental conditions expected at the work location. An automated inspection system should be designed for the worst expected conditions, and automatic compensation for environmental deviations should be incorporated where possible. When it is not possible to design such compensating equipment, ways to control the environmental conditions at the place of use should be considered.

10.2.9 RELIABILITY

Reliability statements should be provided in the design criteria. This should be in terms of both the system mean time between failures (MTBF) and the discrimination reliability (correct accept/reject decision ratios). Redundancy of inspection is a major means of improving discrimination reliability.

10.2.10 TESTING PRODUCTS AT LIMITS

Like conventional inspection devices, the probes of the automated inspection system will have some manufacturing tolerances. To compensate for errors due to these tolerances and any other factors that may contribute to inspection system inaccuracy, it is necessary to accommodate these tolerances within the product tolerance zone. This may result in rejection of some acceptable products that are very close to the product limits, but it will insure rejection of all bad parts. Depending on the type of probe, the manufacturing tolerances will vary. A comprehensive qualification test should be conducted to establish the operating accuracy of the equipment.

10.2.11 FLEXIBILITY TO CHANGE

Most automated inspection equipment is designed for a narrow product range. If, however, the equipment can be designed to accommodate changes in the product, material handling system, and/or manufacturing system, the inspection costs will be distributed over more products and thus will result in a lower inspection cost per piece. Therefore, the automated inspection system should have a flexible design that will accommodate such changes either "as is" or with minor modifications.

10.2.12 SYSTEM AVAILABILITY

The inspection system should always be available for inspection and never be a bottleneck in the production line. To insure this feature, the inspection system should be designed with faster inspection rates than the production rate or multiple inspection systems should be used. Increasing the inspection rate by using multiple systems is advantageous because of the redundancy provided, and the chances of a failure in both systems are lower than with a single machine. However, the capital investment and operating and maintenance costs of multiple machines may be higher.

10.2.13 DURABILITY

The automated inspection system must be capable of withstanding the physical stresses of the production process such as impacts with products, high temperatures, abrasiveness of product surfaces, and environmental conditions. The useful life of the system should be long enough to be economically justifiable.

10.2.14 MARKING OF PARTS

Marking of parts is a very useful technique for follow-up and corrective actions in production processes. The automated inspection system should be able to identify, mark, or separate acceptable and rejectable products. When products originate from multiple production lines, it may be necessary to identify the source line of the product. Inspection equipment that uses color codes or other distinctive marks also can be employed to identify the source production line for each product. This type of marking often is required to identify the production line that is producing the defective products so that corrective action may be taken.

Downloaded from http://www.everyspec.com

10.3 ACCEPTANCE CONSIDERATIONS

The buyer is usually responsible for monitoring an automated inspection system during construction and installation. The main purpose of this evaluation is to insure that the system performs in accordance with the specified requirements. It is essential to conduct a vendor demonstration test and an acceptance test on the actual system being procured rather than on a prototype. Usually the tests are performed by using predetermined standards. The rationale, methods, and advantages of each of these tests are briefly discussed in the paragraphs that follow.

10.3.1 VENDOR DEMONSTRATION TEST

A vendor demonstration test is performed in accordance with an approved test plan at the vendor's plant before the system is shipped to the user. The advantage of this test is that if the performance of the system is not to the buyer's satisfaction, corrective action can be taken before shipping and thus avoiding additional transportation time and expense. This test may be performed on a test bed or under simulated working conditions. When such a test is included in the contract, the vendor is responsible for demonstrating to the satisfaction of the buyer that the system will meet the contractual performance requirements when installed at the site. It is during this test that an extensive test to demonstrate the accuracy of the system is performed.

10.3.2 ACCEPTANCE TEST

The acceptance test is usually performed at the user's site after system installation. The main purpose of this test is to insure that the system meets the specified requirements under actual working conditions. These requirements usually include design, operation, and calibration. The endurance, reliability, availability, and maintainability of the system are usually also verified by performing the test for a sufficient period of time.

10.3.3 USE OF STANDARDS

The use of predetermined test standards in testing inspection systems eliminates the need for subjective judgments and eliminates bias from the system acceptance decision. When using the standards, it may be necessary to compensate for the differences between the test conditions and the actual working conditions, e.g., the environmental conditions at the test site and the range of actual working conditions. Examples of test standards include (1) verification standards that are used for verifying that the system will accept only good products and (2) calibration standards that are used to set system limits prior to performing any testing or for testing the self-calibration function of machines having autocalibration features.

10.4 OPERATING CONSIDERATIONS

When designing or selecting a system, it is also essential to provide for efficient system operation. Consideration, at an early stage in the process, of the operating attributes that follow will facilitate the development or selection of the system best suited to the user's needs.

10.4.1 VERIFICATION TEST

The verification test, performed periodically after a system is put into operation, uses verification standards to confirm that the system is performing as desired. Verification standards simulate product shape at the datum and dimensional zones. The standard dimensions should be at or just inside the part limits to be rejected by the system and shall be rejected by the system with a probability compatible with the system accept/reject reliability requirements. The verification standard must be able to withstand the rough handling of a production conveyor and movement through the inspection system. During a verification test, a record of the measured value and the value of the set point must be generated. Depending on the results of this test, calibration may be ordered.

10.4.2 CALIBRATION CAPABILITY

The calibration capability of the system is the ability of the system to be adjusted either manually, automatically, or on command to predetermined standards to reset accuracy and reproducibility. Systems with self- or autocalibration save time and do not require skilled operators but will involve higher capital costs.

Downloaded from http://www.everyspec.com

10.4.3 INDEPENDENT CONTROLS

Providing independent controls for the material handling, manufacturing, and inspection systems insures that a malfunction in one system will not paralyze the entire production process. As stated in par. 10.2.6, such independent controls allow bypassing of the defective system.

10.5 MAINTENANCE CONSIDERATIONS

After the system is placed in service, periodic maintenance is imperative if the system is to remain operational and costly downtime minimized. Therefore, the maintenance considerations that are outlined in the paragraphs that follow should be given a high priority.

10.5.1 REPAIR PARTS

System parts or modules that have short or unpredictable lives should be identified and supplied with the system to shorten expensive downtime.

10.5.2 PREVENTIVE MAINTENANCE

Preventive maintenance is one way of minimizing the potential of unpredictable and expensive breakdowns. To enable the operator or maintenance personnel to perform preventive maintenance, a definite schedule and detailed description of maintenance steps to be performed should be supplied with the system.

10.5.3 CORRECTIVE MAINTENANCE

A troubleshooting guide with definite diagnostic steps and corrective actions should be supplied with the system to enable the operator or maintenance personnel to expedite repair and minimize system downtime.

SECTION II. SOFTWARE

10.6 DESCRIPTION OF SYSTEMS

The function of the computer in a CAIS may be that of a controller, an analyzer, or both. A brief description of each of these systems follows.

10.6.1 CONTROLLERS

Controllers, or control units, direct all the operations in a computer-aided inspection system. They monitor the inspection process, evaluate the observations, and control the process according to programmed instructions. The controllers can be general-purpose or special-purpose. Some controllers are programmable, in which case an operator can give control instructions and can design displays. Usually, controllers perform the control function by reading instructions from memory, monitoring inputs, controlling the operations of the arithmetic unit, storing the results, and producing output. Depending on their end use, the controllers can be simple or very complex. Simple controllers may control a single variable, whereas a more complex programmable controller may be capable of controlling several variables simultaneously.

Until recently only the continuous process industries—such as the metal, oil, and chemical industries—enjoyed widespread use of computer-aided control systems. The discrete production industries such as machine shops and fabrication workshops rarely used such control systems. The main limitation was that the machines or work centers were smaller and more modular than those in continuous process industries, and because these modular machines were often made by different vendors, it was difficult to design a common control system. In addition, the machine tool, transfer line, and material handling equipment manufacturers lagged behind in incorporating computer control technology. With the advent of integrated circuit technology and inexpensive programmable controllers, however, transfer lines and other complicated manufacturing systems are extensively using computer-aided controls.

The main components of a control system are the data collection and input peripherals, the communication device, the processing unit, memory, and output devices. The data collection and input devices include keyboards, push buttons, dial switches, badge readers, barcode readers, proximity switches, limit switches,

Downloaded from http://www.everyspec.com

photodiodes, and other types of sensing devices. The communication devices may include wires, telephone lines with modems, and multiplexers. The processing unit may have an 8-bit, 16-bit, or 32-bit central processing unit (CPU) and ports for peripherals. Controllers can have large addressable memory as well as an auxiliary memory in disk drives or tapes. Output devices may include display terminals and printers. Besides these, peripherals such as graphics controller boards and floppy disk controller boards may also be present.

10.6.2 ANALYZERS

Analyzers are devices used for debugging software. The most commonly used analyzers trace and record the path followed by the information through both the hardware and software. Some common types of analyzers are static analyzers, logic analyzers, and signature analyzers.

Static analyzers are methods used to observe the software listings (computer program). Their objective is to evaluate the complexity of a program, the adequacy of comment lines, the module/subroutine sizes, and data base/variable definitions or consistencies.

The logic analyzers examine the functional modules of a program and the interaction between these modules during execution. These devices include data acquisition units such as sensors, counters, timers, duration filters, and glitch detectors. In software analysis logic analyzers are used for detection and isolation of software logic problems. The path of information is traced, and a count of looping and conditional branching is recorded.

The signature analyzer is used for validating the integrity of data streams. The signature analyzer compresses a large amount of data into a relatively short data word, known as the signature. The device also has a reference signature stored in the memory. If the reference signature matches the new signature, the data are valid; otherwise, they are not.

10.6.3 DUAL SYSTEMS

Dual systems include the functional features of both the controllers and analyzers. The data are acquired, analyzed, and validated, and the software is analyzed. Depending on the results, control signals are sent to the proper units in the system for necessary action.

10.7 SYSTEM DESIGN CONSIDERATIONS

In the past when computer-aided systems were custom designed and expensive, automated inspection systems without the aid of a computer were common. The advent of more sophisticated computers and microprocessors and developments in large-scale integration technology has significantly reduced costs; consequently most automated systems now use some form of computerization. The acceptance considerations pertaining to automatic inspection outlined in par. 10.3 also apply to all types of computer-aided inspection equipment, whether automated or not. A brief description of factors to be considered when designing or selecting a CAIS is presented in the paragraphs that follow.

10.7.1 ACCURACY

The accuracy of the inspection cannot be better than the accuracy of the least accurate component in the system. A system should be able to read a dimension at least 10 times more accurately than the accuracy of the specified tolerance. In other words, a system that has an accuracy of 0.0001 in. is desirable for inspection of a dimension with a tolerance of 0.001 in. (This relationship between the product tolerance and inspection equipment accuracy is the same as that provided by the 10% rule in gage design.) Also in accordance with the principle of tolerancing the inspection equipment in the direction of safety, the system accuracy and tolerance must be such that only products within the tolerance limit are accepted. In software this means that the result of numeric methods error accumulation in combination with hardware—i.e., analog/digital converters, CPU word size, etc.—inaccuracies should be less than 10%.

At the time of delivery of the inspection system, a system tolerance study or an error budget analysis must be made available for review. These analyses include information about observed system accuracy at different dimensions and help to insure that the system is within the accuracy standard.

Accuracy is improved by taking several measurements of a dimension and averaging the results.

Downloaded from http://www.everyspec.com

10.7.2 SENSITIVITY

The sensitivity of an inspection system is the smallest change in dimension that it can measure. In CAISs the computer contribution to resolution depends on word length, i.e., the longer the word length, the more subdivisions of the largest measurement can be stored. A system with an 8-bit word length and data path has a resolution of about 0.4% of the largest dimension measured. A 16-bit system has a resolution of 0.02% of the largest dimension measured, and longer word lengths have even finer resolutions.

10.7.3 HARDWARE AND SOFTWARE COMPATIBILITY

The hardware and software used in the inspection systems should be compatible with each other in the following areas:

1. Input and output formats should be matched so that the hardware can correctly interpret the signals generated by the software.
2. The execution speed of the hardware and software should be matched to the desired inspection rate and to the required accuracy and resolution.
3. The initial system design should provide a 50% reserve in computing capacity for future software changes and improvements.
4. The hardware should have sufficient random access memory (RAM) to accommodate the data during processing.
5. Read only memory (ROM) design criteria should allow for 50% growth.

To prevent the retrieval of erroneous data, it may be necessary to have a parity check with error handling built into the system. Parity relates to the maintenance of a sameness of level or count. In a computer, parity is achieved by keeping the sum of binary ones in a computer word either always odd or always even. A parity check involves adding of binary digits in a character or word and checking them against a previously computed parity. This is typically handled as a built-in test (BIT).

10.7.4 SELF-CALIBRATION

The calibration feature usually is built into computer-aided inspection equipment to make such systems self-calibrating. There are two principal types of self-calibrating systems. In one type the operator activates the self-calibrating feature periodically and the system recalibrates itself. The other type is completely automatic, and calibration is accomplished on a specified frequency.

The required calibration frequency is a function of system performance and product characteristics. For systems already in use, the manufacturer may be able to recommend—or build in—the calibration frequency based on past performance. For a new system it may initially be necessary to record system performance over a period of time through frequent use of standards of known dimensions, and based on this study, the proper calibration frequency may be determined.

The system must allow for verification of the calibration function. This is usually done by introducing standards into the product stream. If a system fails verification, all product accepted since the previous successful verification or calibration must be reinspected.

10.7.5 BUILT-IN TEST EQUIPMENT

BITE enables the system to test its own performance periodically by checking each functional component of the system. A few tests for which BITE equipment is often provided in CAISs follow:

1. *Wraparound Test.* This test checks to determine whether there is any loss of accuracy while processing information within the system by converting a digital word to an analog signal and then back to a digital word that is then compared with the original.
2. *Lamp or Siren Test.* This test checks the various output devices—e.g., displays and printers and signal malfunctions—of the system.
3. *Check Sum Test.* This test checks the ROM of the system for correctness by adding groups of digits together—usually without regard for overflow—and by comparing the sum with a previously computed sum. This verifies that no bits have been changed since the previous check sum test.

Downloaded from http://www.everyspec.com

4. *Write-In and Write-Out Test.* This test checks the performance of the RAM by storing, retrieving, and displaying or printing information that is then compared with the original information.

10.8 SOFTWARE QUALITY ASSURANCE

To achieve consistently good quality in software, it is essential that a systematic approach for incorporating the desired specific quality factors in the software be established and faithfully followed. This is most easily accomplished by involving the software developer at every stage of the process—from specification and design to completion and testing of the software. The objectives should be clearly defined, and the desired quality factors should be enumerated before beginning the design. Also, every effort must be made to incorporate the desired quality factors during design and coding, and these quality factors should be verified during the testing and validation stages. Lack of such a systematic approach may result in omission of some important considerations and may not always result in good quality software. The significant quality factors, as well as programming considerations and testing and documentation, are briefly discussed in the paragraphs that follow.

10.8.1 SOFTWARE QUALITY FACTORS

10.8.1.1 Correctness

Correctness is defined as the extent to which software in combination with the available hardware satisfies the specifications and fulfills the user's requirements. Correctness includes the concept of "robustness" of algorithms. "Robust" algorithms follow proper formulation practices and thus avoid errors such as compounding or accumulation of roundoff errors and indeterminate results.

10.8.1.2 Security

To prevent unauthorized tampering, it is essential that software security be a prime consideration. Because of the communication capabilities of computer-aided systems, physical security of the facility is not sufficient. Access to computer-aided systems must be controlled. The system should be able to keep an internal record of the person's name, the time, and the duration of each access. The criteria for measuring the effectiveness of security are access control and access audit.

10.8.1.3 Maintainability

Good maintainability of software is defined as the ease of identifying, isolating, and correcting an error, or a "bug", in a working program. Consistent programming practices, simplicity, conciseness, and a modular structure improve maintainability, and they are the criteria used for evaluating software maintainability. Abundant use of clearly worded comments (self-descriptiveness) assists the operator (who may not have been involved in the design phase) in maintenance of the software.

Although these aspects of a software program are keys to maintainability, the primary key is documentation. The specifications should exist to describe fully the functional and physical configurations of the software, and configurations must be under control.

10.8.1.4 Structure

Proper structure makes a software program easy to follow, debug, test, modify, and implement. Debugging of large and structurally unsound programs can be a harrowing and expensive experience. Program structure affects testability, flexibility, and commonality of the software. Testability is the measure of ease of testing the software and is measured by cyclomatic complexity, modularity, instrumentation, and self-descriptiveness. Modularity relates to the existence of independent subprograms that can be separately tested and debugged, and instrumentation aids in testing by flagging error conditions.

Another software quality characteristic affected by the structure is flexibility. Flexibility is measured by modularity, generality, expandability, and self-descriptiveness. Modularity facilitates modifications, and generality makes the software applicable to more than one type of inspection. Expandability is built into the program to accommodate additional steps or modules. Self-descriptiveness adds to flexibility by making the software easily understandable.

Downloaded from http://www.everyspec.com

Commonality is a measure of the extent to which a program can be used for other applications; it is also a function of the structure. Commonality relates to the packaging and scope of the functions of the program. This feature of software is measured by generality, modularity, system independence, and self-descriptiveness. System independent software does not depend on the hardware architecture and thus can be used on a variety of systems. All of the previously mentioned software features in conjunction with the quality of the documentation determine the maintainability of the software.

10.8.1.5 User Friendliness

User friendly software facilitates learning, requires less effort, and does not demand high skills or a lot of programming knowledge in order to use it. The criteria for measuring this software quality characteristic are operability, documentation, and communication.

10.8.2 PROGRAMMING CONSIDERATIONS

Use of the following programming techniques that follow will make a program more understandable, easy to debug, flexible, maintainable, and efficient.

10.8.2.1 Top-Down Design

In top-down software design a programmer starts from the macro level of program definition and deductively programs his way to the micro or lower functional levels. This approach is applicable to any problem-solving situation, it provides excellent organization, and it makes the program easy to understand and debug.

10.8.2.2 Incremental Development (Modularity)

For large programs the only practical way to develop a workable program quickly is to write it in several small independent modules, test and debug them separately, and then combine them into one complete program. This method improves software organization and understanding, and it simplifies testing and debugging. Programs developed by using this approach can be modified or extended easily.

10.8.2.3 Enforced Standard Programming Practices

Standardized programming practices reduce costs by making the programs more portable, easy to follow, and understandable without extensive knowledge of system hardware. Therefore, standard programming practices should be established and enforced.

10.8.2.4 Independent Testing

After testing and debugging by the programmers, it is often helpful to have an organizationally independent team test a large program. This testing may identify bugs that the programmers themselves have overlooked because of their deep involvement in the programming effort.

10.8.2.5 Recommended Programming Practices

Programming practices—and on a broader base, the entire area of software development—are covered in two military standards: DOD-STD-2167, *Defense System Software Development* (Ref. 1), and DOD-STD-2168, *Defense Systems Software Quality Program* (Ref. 2). The basic premise of both documents is that a labor intensive product like software is best controlled through a disciplined approach, which, in programming, means structural top-down methodology and, in quality assurance, means formal review, audits, and tests described in the paragraphs that follow (Ref. 3).

10.8.3 SOFTWARE TESTING

Software is tested at various stages to verify that it meets the desired objectives. A major, comprehensive test performed on software is called validation and verification (V&V). The V&V activity systematically examines the sources of requirements, evaluates the requirements as stated in software documents, and attempts to

Downloaded from http://www.everyspec.com

evaluate their impact on the design of system and software. Requirements that have higher risk and criticality are identified for receiving higher priority when assigning V&V resources. Validation and verification is done for the design as well as the source program. The design is examined for logical integrity, the extent to which it meets requirements, mathematical operations, and timing in algorithms. Often, data base design, control structures, task allocation, and architecture are also inspected. In program verification the program is examined for syntax and structural flaws. Verification of the design and program can either be done manually or by using automatic testing aids, which are discussed later. Large, complex programs are almost always tested by such automatic aids to save time and effort.

The validation portion of the V&V activity establishes whether the software meets the specified requirements by using demonstration tests and built-in tracing mechanisms. Often bottlenecks or limitations are identified during this process. Validation usually involves tests designed by the programmer as well as some independent tests. The independent tests often go beyond the programmer's tests and try to identify the "stress point" (point of failure) of the system.

Another type of test usually performed on software to be purchased is the vendor demonstration test, or software qualification test. By this test the software programmer, at his site, demonstrates to the buyer that the program meets the objectives and quality requirements. Because this test is performed before shipping and installing at the buyer's premises, if there are any deviations from the specified requirements, the necessary modifications can be easily done at minimal additional cost.

When developing and testing large, complex software, automatic software testing devices help save time and effort, and several such devices are available. The most common types of automatic testing devices are the automatic design checker, test coverage analyzer, test driver, environment simulator, and test data generator, i.e.,

1. *Automatic Design Checker.* This device is a computer program that accepts a software design, analyzes it, prints out any inconsistencies and flaws, and also provides other relevant information about the design. Typical flaws detected by an automated design checker include inability to terminate the process, unreachable functions, functions without successor functions, and inconsistent relationships between functions. It can also produce additional information such as a cross-reference list of referenced data items and the procedure cell structure. Additionally, it can perform an audit to check adherence to design standards.

2. *Test Coverage Analyzer.* This devise is a computer program that counts and prints out information about each occurrence of the execution of each logic segment in the program under test. The tables printed out identify the logic branches not being used by a test case. They also identify the segments of the program that are used more frequently and, therefore, that should be evaluated for optimization.

3. *Test Driver.* This device is a computer program that can automatically test another computer program or its component. The test driver allows inputting sufficient data to test the components and the printing of the resulting output.

4. *Environment Simulator.* This device is a special form of test driver. It is more useful in the real-time testing of software that involves external device interfacing. The environment simulator tries to simulate faithfully the external world and observes the performance of the program under test. An example of an environmental simulator is the instruction level simulator (ILS), a system that allows one computer to simulate another.

5. *Test Data Generator.* This device is a computer program that automatically and systematically generates test cases and simultaneously tries to optimize the number of tests in order to minimize the cost of testing while insuring that sufficient test cases have been examined.

After the software is delivered, but before it is accepted, the buyer performs a test known as the acceptance test, i.e., the software is again tested to see whether it meets the user's requirements.

Brief descriptions of commonly used software quality assurance techniques are presented in the paragraphs that follow.

10.8.3.1 Algorithm Evaluation Test

This test is performed before the design is finalized. Critical tradeoffs, such as speed versus precision or size, are considered, and decisions are made based on requirements and resource availability. Simulation is often performed on the trial source program to evaluate the strengths, weaknesses, and robustness of algorithms.

Downloaded from http://www.everyspec.com

10.8.3.2 Analytical Modeling

In analytical modeling the relationships in the software are expressed by mathematical equations. Although these models can capture the essence of the relationship, they usually are inaccurate because they are based on several simplifying assumptions. Therefore, these models are used only to evaluate the software in the abstract.

10.8.3.3 Auditing

Auditing involves checking the status of the program and its documentation or the adherence of programmers to established standard procedures. Audits can be scheduled in various stages of software development or can be randomly conducted to check software quality and to verify configuration status.

10.8.3.4 Walk-Throughs

Walk-through is a technique used by programmers to review the design or program with their peers. The programmer takes the reviewer through the program step-by-step to identify any errors. At his discretion, the programmer accepts or rejects the reviewer's advice.

10.8.3.5 Program Inspection

In program inspection the software program is systematically checked for errors. The inspections evaluate the program against predefined criteria. Discrepancies are identified, and the program is modified. To insure that all of the errors have been eliminated, a follow-up inspection is also performed.

10.8.3.6 Inspection of Programming Practices

In this inspection the software program is checked for proper programming practices. Programming practices that might cause confusion, make tracing difficult, accumulate errors, or result in indeterminate solutions should be corrected at this stage.

10.8.3.7 Error-Prone Analysis

This analysis is performed during the development of a large program to identify areas of the program that are prone to errors; these are the portions that required abnormal numbers of corrections and modifications during program development. To improve program usefulness, these portions are either reworked or extensively tested before implementation.

10.8.3.8 Functional Testing

As the name indicates, functional testing is performed to insure that the software meets the specified requirements. Actual expected input values are read in, and the output is checked to identify any discrepancies.

10.8.3.9 Simulation

Simulation is a tool for predicting system performance under different operating conditions by using various modeling techniques and historic data. System capacities, timing, and performance constraints can be studied. By performing simulations at various stages of the software life cycle, conceptual tradeoffs can be evaluated.

10.8.3.10 Static Analysis

A static analysis is used to identify any inherent weaknesses in the software program. The syntax is checked, and statistics are generated by using predetermined input values and following them through the entire system. Program structure, relationships between modules, symbol and subroutine cross-references are checked, and any violations of established rules identified.

10.8.3.11 Stress Testing

Stress testing is done to see how the system performs at the extremes of its designed capacity. The software must operate and respond properly to a series of abnormal and illegal inputs. The system must also be able to

Downloaded from http://www.everyspec.com

recover from a degraded state (at saturation) without operator intervention. For software that is to be used in a field environment that involves synchronized or multiple input/output with other devices, a separate stress test should be conducted under those conditions and with emphasis on proper continuous operation for a specified number of hours at heavier than normal data rates.

10.8.4 DOCUMENTATION

Software programs usually are quite dynamic in that they are modified often. A program may be prepared in one form, such as a high-order source language, and transformed into another such as an executable object code. Depending on the type of hardware, application, and system environment used to create the object program, several object program configurations can be generated from one source program. Also a source program stored in any media is difficult to comprehend. For these reasons it is essential to have a formal software configuration management program. Software configuration management is a system of identifying, baselining (assigning name, specification, and technical documentation as a starting reference point), controlling, and reporting changes to software products.

Software projects, especially the large ones, should be supported by well-prepared documentation both during and after development. "Document as you go" is an excellent policy. A central program support library—where software is stored according to configuration management principles—is very valuable for software projects because it is both a repository for storing and processing program configurations and a means of protecting their integrity. Only authorized and well-documented changes to the software are allowed, and different versions are clearly and uniquely identified. This isolation from unauthorized use protects the integrity of the software. The documentation of changes is maintained so that any previous configuration can be recreated if necessary. Documentation required in support of a software project depends on the task or contract. The complexity of the software, its eventual ownership, and the responsibility for maintenance are the primary factors that govern the need for documentation. In general, the support documentation of software does not receive as much attention as it should. Good documentation is extremely vital for the user's understanding of the software; therefore, it should receive as much attention as the software itself.

The US Government and the Department of the Army (DA) have clearly defined requirements for inspection software documentation. The four broad categories they require are the planning documents, administrative procedures, software test procedures and reports, and support documentation. Table 10-1 presents a comprehensive list of data item descriptions (DIDs) and their associated source documents. The DIDs to be supplied by the software vendor depend on the individual contract, eventual ownership of the software, and the contract statement of work requirements identified by using the selection procedure presented in Ref. 3.

10.9 INTERFACE

Often it is necessary to trace stimuli from the computer to the unit under test (UUT) for investigative purposes. Clearly worded documentation—describing hardware-to-hardware and hardware-to-software interfaces that involve items such as cables, custom interface boards, and switching mechanisms—is essential to evaluate the result of a trace test.

Downloaded from http://www.everyspec.com

TABLE 10-1. DATA ITEM DESCRIPTION LIST

DID Number	Title	Source Document
DI-E-1143	*Notification of Changes to Commercial Equipment/Computer Software and Documentation*	MIL-STD-1456
DI-A-7089	*Conference Minutes*	MIL-STD-1521
DI-A-7088	*Conference Agenda*	MIL-STD-1521
DI-T-21553A	*Source and Object Program Listing*	MIL-STD-2077
DI-CMAN-80008	*System/Segment Specification*	MIL-STD-490
DI-QCIC-80572	*Software Quality Program Plan*	DOD-STD-2168
DI-MCCR-80012	*Software Design Document*	DOD-STD-2167A
DI-MCCR-80013	*Version Description Document*	DOD-STD-2167A
DI-MCCR-80014	*Software Test Plan*	DOD-STD-2167A
DI-MCCR-80015	*Software Test Description*	DOD-STD-2167A
DI-MCCR-80017	*Software Test Report*	DOD-STD-2167A
DI-MCCR-80018	*Computer System Operator's Manual*	DOD-STD-2167A
DI-MCCR-80019	*Software User's Manual*	DOD-STD-2167A
DI-MCCR-80021	*Software Programmer's Manual*	DOD-STD-2167A
DI-MCCR-80022	*Firmware Support Manual*	DOD-STD-2167A
DI-MCCR-80024	*Computer Resources Integrated Support Document*	DOD-STD-2167A
DI-MCCR-80025	*Software Requirements Specification*	DOD-STD-2167A
DI-MCCR-80026	*Interface Requirements Specification*	DOD-STD-2167A
DI-MCCR-80027	*Interface Design Document*	DOD-STD-2167A
DI-MCCR-80029	*Software Production Specification*	DOD-STD-2167A
DI-MCCR-80030	*Software Development Plan*	DOD-STD-2167A
DI-CMAN-80644	*Engineering Change Proposal (Short form)*	MIL-STD-481
DI-E-1126A	*Notice of Revision/Specification Change Notice*	MIL-STD-490
DI-E-3108	*Configuration Management Plan (CMP)*	MIL-STD-483
DI-MCCR-80770	*Software Independent Verification and Validation Plan*	Statement of Work
DI-M-30405	*Programming Manual*	
DI-MCCR-80307	*Software General Unit Test Plan*	DOD-STD-1703(NS)
DI-MCCR-80308	*Software System Integration and Test Plan*	DOD-STD-1703(NS)
DI-MCCR-80309	*Software System Development Test and Evaluation Plan*	DOD-STD-1703(NS)
DI-MGMT-80507	*Project Planning Chart*	Statement of Work
DI-H-5545	*Computer Software Product*	
DI-MCCR-80306	*Software Unit Development Folders*	DOD-STD-1703(NS)
DI-E-30149	*Research & Development Computer Software*	
DI-MGMT-80618	*Software Design Document*	Statement of Work
DI-MCCR-80319	*Software End-Product Acceptance Plan*	DOD-STD-1703(NS)

Downloaded from http://www.everyspec.com

REFERENCES

1. DOD-STD-2167, *Defense System Software Development*, 4 June 1985.
2. DOD-STD-2168, *Defense System Software Quality Program*, 29 April 1988.
3. *Software Quality Assurance Handbook for Automatic Inspection Equipment*, Technical Report MC-83-AIE-0004, US Army Armament, Munitions, and Chemical Command (by Teledyne Brown Engineering), Dover, NJ, 1983.

BIBLIOGRAPHY

J. D. Cooper and M. J. Fisher, Eds. *Software Quality Management*, Petrocelli Books, Inc., New York, NY, 1979.

R. L. Glass, *Software Reliability Guidebook*, Prentice-Hall, Inc., Englewood Cliffs, NJ, 1979.

C. W. Kennedy, and D. E. Andrews, *Inspection and Gaging*. Fifth Edition, Industrial Press, Inc., New York, NY, 1977.

U. Rembold, M. K. Seth, and J. S. Weinstein, *Computers in Manufacturing*, Marcel Dekker, Inc., New York, NY, 1977.

E. S. Roth, Ed., *Gaging: Practical Design and Application*, Society of Manufacturing Engineers, Dearborn, MI, 1981.

J. S. Sipple and C. P. Sipple, *Computer Dictionary and Handbook*, Howard N. Sams & Co., Inc., and The Bobbs-Merrill Co., Inc., New York, NY, 1972.

Downloaded from http://www.everyspec.com

GLOSSARY

A

accuracy. Freedom from mistake or error, i.e., correctness.

algorithm evaluation test. A software test performed before the design is finalized.

alignment gage. A gage used to inspect the external features of ammunition to insure that the assembled round will fit into the gun chamber.

alignment gage, complete round. For small arms ammunition: a series of ring sections snugly fitted in a tubular holder. For large caliber ammunition: a series of ring sections aligned and enclosed in a rigid, tubular-shaped body.

alignment telescope. A relatively inexpensive optical instrument used to establish a line of sight and to measure vertical and horizontal displacement from the line of sight.

alignment transit. A number of instruments—including the jig transit, transit squares, and cross-axis telescope transit squares—that have the basic function of establishing a plane vertical or normal to the line of sight.

analyser. A device for debugging software.

analytical modeling. The means by which the relations in the software are expressed by mathematical equations.

angle blocks. An accessory that provides a perpendicular surface against which a workpiece may be rested or clamped. The accessory is also known as an angle plate.

angle plate. *See* angle blocks.

angular gage blocks. Blocks of precisely known angles that can be stacked to build angles between 0 and 90 deg. *See* gage blocks.

angularity. Condition in which a surface or axis is at a specified angle—other than 90 deg—from a datum plane or axis.

annular gage. A plug gage, annular in shape, used for measuring internal diameters greater than 8.010 in.

anvil. A term used to designate the gaging member of a gage when constructed as a fixed nonadjustable block or as the integral jaw of the gage.

auditing. A test to check program status or the adherences of programmers to established procedures.

autocollimator. A sensitive optical device used to measure small angles and from which flatness and parallelism can be determined.

automatic alignment instrument. *See* photoelectric alignment instrument.

automatic alignment polarimeter. An instrument that measures body rotation about the line of sight.

automatic alignment telescope. An instrument that measures the translation of a remote body normal to the line of sight.

automatic design checker. A computer program that accepts a software design, analyzes it, prints out any inconsistencies and flaws, and provides other relevant information about the design.

automatic inspection equipment. Measuring or gaging instruments that make a pass or fail determination of a dimensional characteristic without human interaction.

automatic optical probe. An instrument that uses triangulation techniques to measure very small changes in distance to a nearby body.

availability. A measure of the degree to which an item is operable at the start of an operation.

axle mirror. A front surface mirror that is optically flat within one-quarter wavelength of light.

Downloaded from http://www.everyspec.com

B

backlash. Clearance or play between mating tooth surfaces.

backlash, normal. Backlash at the tightest point of mesh at the pitch circle in a direction normal to tooth surfaces in assembled gears.

backlash variation. Difference between maximum and minimum backlash in a given pair of gears.

base circle. The circle from which involute spline tooth profiles are constructed.

beam trammel. A multipurpose transferring device that performs the same functions as dividers and calipers. The device consists of a steel or wooden beam to which "trams" (sliding arms) are attached.

bench comparator. A mechanical comparator set up for use on a workshop bench.

beta backscatter test method. A technique for measuring the thickness of metallic and nonmetallic coatings on metallic and nonmetallic substrates by beta backscatter.

built-in test equipment. Any device that is part of an equipment or system and is used for the express purpose of testing the equipment or system.

built-up snap gage. A snap gage used primarily where a fixed-type gage is desired, and the part tolerance is approximately 0.003 in. It has extended anvils.

C

calibration. Those measurement services provided by a designated person or team, who by the comparison of two instruments—one of which is a certified standard of known accuracy—detect and adjust any discrepancy in the accuracy of the instrument being compared with the certified standard.

caliper gage. Any gage with movable arms—or a combination of fixed and movable arms—which transforms a part feature inserted between or placed over them to an indicating mechanism.

calipers. A measurement-transferring device that consists of two adjustable legs joined at the apex.

chamber gage, weapon. A gage that checks the various diameters and lengths of a weapon chamber.

combination square. Basically a 12-in. steel rule equipped with several attachments to enhance its versatility.

commercial inspection equipment. Equipment readily available on the open market, i.e., from stock, to measure some product elements or features.

commonality. A measure of the extent to which a computer program can be used for other applications.

comparator gage. Any gage that uses an indicator device to contact the work directly and indicate its departure from a preset size with a minimum of auxiliary devices.

composite error. Total variation caused by more than one of the basic types of errors such as runout and by variations in pitch, profile, and lead.

computer-aided inspection system. A system that consists of positioning controllers, sensing devices, signal generators, output devices, and the required hardware and software necessary to control the complete system.

concentricity. Condition in which the axes of all cross-sectional elements of a surface of revolution are common to the axis of the datum feature.

controller. A unit that directs all the operations in a computer-aided inspection system.

coordinate measuring machine. A device that locates, measures, and determines the size and shape of product features in two and sometimes three mutually perpendicular planes.

corrective maintenance. That maintenance performed to restore an item to a satisfactory condition by providing correction of a malfunction that has caused degradation of the item below the specified performance.

correctness. The extent to which software in combination with the available hardware satisfies the specifications and fulfills the user's requirements.

coulometric method. A method for determining coating thickness by measuring the quantity of electricity (coulombs) required to dissolve the coating anodically from a known and accurately defined area.

cube mirror. *See* optical cube.

Downloaded from http://www.everyspec.com

cylindrical stepped gage. A plain plug gage that also has a step ground perpendicular to its axis. Used in depth gaging.

cylindricity. Condition of a surface of revolution in which all parts of the surface are equidistant from a common axis.

D

datum. Theoretically exact point, axis, or plane derived from the true geometric counterpart of a specified datum feature. A datum is the origin from which the location of geometric characteristics of features of a part are established.

dial indicator. Mechanical instrument used for sensing and measuring variations in dimensions.

diametral pitch. Number of spline teeth per inch of pitch diameter. The diametral pitch determines the circular pitch and basic space width or tooth thickness.

dimension. Numerical value expressed in appropriate units of measure and indicated on a drawing and in other documents along with lines, symbols, and notes to define the size or geometric characteristics, or both, of a part or part feature.

direct-current induction system. An indirect measuring technique to measure the wall thickness of an electrically conducting object.

divider. A transfer device used primarily as a scribe.

E

Eberhardt fine thread test. A technique for measuring thread diameter based on the principle of optical diffraction.

eddy current test system. An indirect measuring technique used to measure the thickness of relatively thin conductive on nonconductive materials by eddy currents.

electro-optical system. An array of photodiodes used to gage small parts.

ellipsometer. An instrument used to measure the thickness of oxide films to a few thousands of a wavelength.

engineering change proposal (ECP). A proposal to change the design or engineering features of materiel undergoing development or production.

error-prone analysis. An analysis performed during the development of a large program to identify areas of the program that are prone to errors.

error, systematic. The difference between the average (mean) reading in a series of measurements and the true measurement.

expandability. A feature built into software to accommodate additional steps or modules.

F

fail-safe capability. For an automated inspection system, the term means that the system should not be capable of accepting a rejectable product under any circumstance.

feature. General term applied to a physical portion of a part—e.g., a surface, hole, or slot.

feeler gage. A set of metal leaves of known thickness used for measuring the widths of narrow gaps, slots, recesses, or clearances.

fiber-optic probe. A probe composed of numerous coated glass fibers randomly arrayed, layered, or arranged otherwise in the common end. Applications include vibration monitoring, rotor dynamics, and surface conditions.

fixed-limit-type gage. A gage in which the tolerance should not exceed 10% of the product tolerance.

fixture gage. A gage that either holds a product or is held on a product to allow certain operations to be performed and gages the product.

Downloaded from http://www.everyspec.com

flat cylindrical plug gage. A gage similar to a cylindrical plug gage insofar as application. The chief application is on large-diameter holes where a full cylindrical plug would be impractical due to its weight.

flatness. Condition of a surface in which all elements are in one plane.

flat plug gage. A plug made in the form of a central axial segment of a plain cylindrical plug gage which usually is used in the inspection of the width of a slot or groove.

flexibility. A software characteristic that is measured by modularity, generality, expandability, and self-descriptiveness.

flush pin gage. A gage that uses a pin of known length which moves in relation to a reference surface to indicate acceptability or nonacceptability. Has four designs for different size ranges—barrel type, bar type, large and small bar-spanner types, and bar-countersunk type.

form circle. Circle that defines the deepest points of involute form control of the tooth profile.

form clearance. Radial depth of involute profile beyond the depth of engagement with the mating part. It allows for looseness between mating splines and for eccentricities between the minor circle (internal), the major circle (external), and their respective pitch circles.

forty percent rule. A gage design procedure whose name is derived from the fact that the basic size of the gage is related to 40% of a known parameter.

frame. The body portion of a snap gage as distinct from the gaging pins, gaging buttons, anvils, and adjusting or locking mechanisms.

front surface mirror. A mirror that is flat to one-eighth wavelength of sodium light.

full indicator movement (FIM). Total movement of an indicator when appropriately applied to a surface to measure its variation.

functional gage. A gage that simulates mating parts and uses fixed elements such as pins and bushings to inspect individual part elements; a gage to inspect several requirements simultaneously.

functional plug gage. A plug of a specified diameter and length that must pass through the part.

functional testing. A test performed to insure that the software meets the specified requirements.

G

gage. An instrument that permits pass or fail determination of a dimensional characteristic without knowledge of the actual dimension.

gage blocks. Blocks of precisely known widths or lengths made of hardened alloy steel, tungsten carbide, or chromium carbide. The blocks are usually square or rectangular in cross section, and their measuring surfaces are lapped and polished until optically flat.

gaging button. An adjustable gaging member of an adjustable snap or length gage, which consists of a shank and a flanged portion—the latter constitutes the gaging section.

gear. A cylindrically or conically shaped part that has on one surface a full 360-deg complement of teeth which mate with and engage the teeth of another part nonconcentric with it. Motion is transmitted by means of successive engaging teeth.

generality. A characteristic of software that makes the software applicable to more than one type of inspection.

"Go" gage. A gage that must go on or into.

H

handle. That portion of a gage employed as a supporting means for the gaging member or members.

I

image dissector. An electro-optical system particularly suited for applications that require high-speed, precision measurement; sorting; and classification of parts.

Downloaded from http://www.everyspec.com

index. Theoretical angular position of gear teeth about an axis established by a specified surface.

interchangeability gage. A gage that is used to insure that products or assemblies are interchangeable.

interferometer. An instrument that uses light interference phenomena for the precise determination of distance measurement, angular measurement, and optical component testing.

interrupted diameter. A cylindrical or spherical part whose surface is not smooth.

J

jig transit. An optical instrument for establishing a vertical sighting plane. Its main application in optical metrology is to determine the location of specific surface elements of a large object in relation to an optically scanned vertical reference.

K

keyway, parallel. A square or rectangular slot of specified depth and width.

keyway, tapered. A keyway rectangular in cross section, but its depth is variable with a gradual taper.

L

laser range finder. An instrument that measures distance to a body based on the round-trip time of light.

lead. Axial advance of a helix through one complete turn.

lead variation. Difference between the measured and specified lead traces that is measured in the direction normal to the specified lead in the gear.

least material condition (LMC). Condition in which a feature of size contains the least amount of material within the stated limits of size—e.g., maximum hole diameter, minimum shaft diameter. LMC also refers to a dimensioning concept—based upon the conditions—in which the allowable tolerance varies as the feature size departs from LMC.

lens bench. *See* optical bench.

leveling mirror. A pair of vertical parallel reflecting surfaces that can be used in place of an alignment-telescope level.

line of sight. The straight line between an observer's eye and other observed object or spot.

LMC gage. A gage to check positional or form requirements of product features when tolerances are modified by an LMC callout.

M

magnet blank mirror. An optically flat, circular front mirror within one-quarter wavelength of light with 1 to 3 magnetic feet cemented to the back of the mirror.

magnetic field testing. An indirect measuring system that uses magnetic field strength to gage the thickness of nonferrous metals, glass, plastics, or similar materials.

magnetic pull-off gage. A gage used to measure the thickness of a nonmagnetic film that coats a magnetic base. A spring is calibrated to determine the force required to pull a permanent magnet from the material.

maintainability. A measure of the ease and rapidity with which a system can be restored to operational status following a failure or be retained in a specified condition.

maintenance. All actions necessary for retaining an item in, or restoring it to, a serviceable condition.

major circle. Circle formed by the outermost surface of the spline. It is the outside circle (tooth tip circle) of the external spline or the root circle of the internal spline.

Downloaded from http://www.everyspec.com

master. A master is a device made to the highest degree of accuracy attainable and used mainly for reference or calibrating purposes.

master check gage. A gage that simulates the product dimensions to be gaged. The check gage is made accurate to within approximately 5% of the part tolerance and usually is made to either the maximum or minimum conditions. Master check gages are used for setting, acceptance, or surveillance.

master gage. A gage made to the specified—maximum or minimum— product limits within a high degree of accuracy as related to product tolerance. A master gage is used as a referee gage to accept or reject products that previously have been gaged and found to be borderline cases.

maximum material condition. Condition in which a feature of size contains the maximum amount of material within the stated limits for size—e.g., minimum hole diameter, maximum shaft diameter. Also refers to a dimensioning concept—based upon the condition—to insure a noninterference fit between mating parts.

mechanical comparator. A gage that mechanically compares an unknown dimension with a preset, known size.

micrometer. A precision measuring instrument, accurate within 0.0001 in., used for measuring internal and external dimensions.

minor circle. Circle formed by the innermost surface of the spline. It is the root circle of the external spline or the inside circle (tooth tip circle) of the internal spline.

MMC gage. A gage to inspect positional or form requirements of product features when tolerances are modified by an MMC callout.

modularity. A characteristic of software that facilitates modifications of the software.

modularization. The design of equipment such that its functional grouping, arrangement, and size improve both the ability to test and ease of maintenance.

multielement plug gage. A device that includes all male gages composed of two or more gaging elements on a common axis.

multiple-piece gage. A device for inspecting several part elements simultaneously that is constructed so it can be disassembled.

N

nodal slide. An instrument that has the provision for moving a lens longitudinally with respect to the vertical axis of rotation.

"Not Go" gage. A gage that must not go on or into or must not screw on more than a specified number of turns.

O

open setup. An arrangement of standard measuring equipment used to verify the conformance of the geometric characteristics of a product with the specified values.

optical bench. An instrument for measuring focal length of a lens.

optical comparator. A device that projects the enlarged image of an object on a viewing screen where it can be compared to a drawing or a master chart.

optical cube. A device used to deviate the line of sight through a known angle in calibrating rotary table.

optical flat. A highly accurate, transparent surface that gages by the use of light-wave interference.

optical square. A device used with an alignment telescope to establish a plane perpendicular to the line of sight through the use of a pentaprism that performs the same function as a jig transit.

optical tooling. The use of manual alignment instruments and accessories for dimensional inspection.

optical tooling level. *See* sight level.

P

parallelism. Condition in which all points of a surface are equidistant from a datum plane or all points of an axis are equidistant from a datum axis.

Downloaded from http://www.everyspec.com

parallels. There are three categories—bar, box, and taper. Bar and box parallels are used primarily to support objects for inspection on a surface plate. A taper parallel is a transferring device.

penetrating radiation test system. An indirect measuring technique used for in-process thickness gaging and the measurement of pipe or tube wall thickness.

perpendicularity. Condition in which a surface, median plane, or axis is at a right angle to a datum plane or axis.

photoelectric alignment instrument. An instrument with the ability to generate an electric signal that indicates the alignment error.

pilot gage. A plug gage for measuring internal diameters when the combined effect of hole size and position or form tolerance is such that a pilot is required to center and start the gage in the hole.

pilot plug gage. A gage used to measure holes where the combination of size and part tolerance is such that a pilot hole is required to center and start the gage in the hole.

pitch. Theoretical distance between corresponding points on adjacent teeth of a gear and is the average of all tooth-spacing readings in 360 deg.

pitch circle. Reference circle from which all circular spline tooth dimensions are constructed. Its diameter is determined as the ratio of the number of teeth to diametral pitch.

pitch variation. Algebraic difference between the pitch and the tooth spacing.

plain adjustable snap gage. A snap gage—with or without extended anvils—used for gaging part diameters, thicknesses, and lengths when the part tolerance is 0.003 in. or greater.

plain cylindrical plug gage. The most common form of plug gage. It consists of a single, cylindrical diameter plug attached to a suitable handle.

plain ring gage. Any ring gage that verifies the size of a single male plain cylindrical surface.

plain step ring gage. A plain ring that has a surface ground perpendicular to its axis for use in gaging a length.

planer gage. A versatile surface plate accessory that can be used as a transferring device or as an adjustable reference surface.

plate comparator. A bench comparator with a slanted staging plate for locating and mounting the product.

plug gage. A gage that simulates a male part or has an outside measuring surface that tests the size of a hole.

plug gage, adjustable. A device that consists of a frame, a set of gaging buttons, and an adjusting mechanism. The gages are usually applied to low-production items when the internal diameter to be inspected is large and the part tolerance is less than 0.003 in.

plumbing mirror. A horizontal mirror used to establish an optical plumb line.

pneumatic gaging system. A pneumatic comparator or air gage that indicates whether a part is in tolerance by measuring vibrations in airflow or pressure.

portable comparator. A hand-held mechanical comparator that can be moved to a product for gaging.

position. Location of features in relation to each other or to a datum.

precision. A measure of the closeness of a series of measurements.

pressure angle. Angle between a line tangent to an involute and a radial line through the point of tangency.

preventive maintenance. That maintenance performed to retain an item in satisfactory operational condition by providing systematic inspection, detection, and prevention of incipient failures.

product drawing. Primary document used to define the product.

product with interrupted diameters. A cylindrical or conical product with a discontinuous circumference—e.g., serrated parts, knurled parts, splines, gears, hobs, and screws.

profile. Geometric shape of tooth from its root to its tip.

profile gage, cartridge case. A gage used to insure that the maximum profile cartridge case does not exceed the maximum virtual size specified.

progressive (coaxial) plug gage. A true position gage that has successive coaxial plugs of different diameters. Used to inspect simultaneously location and form of successive coaxial internal diameters.

projected tolerance zone. Concept used to prevent alignment and interference problems between mating parts, which can be caused by variations in perpendicularity of threaded or press fit holes.

protractor. A basic measuring instrument for measuring and transferring angles.

Downloaded from http://www.everyspec.com

R

receiver gage. Any gage that receives the part and verifies its dimensions. The name is applied only to gages that consist predominantly of *surfaces* or portions of surfaces arranged to verify part dimensions. *See* fixture gages.

recessed-type plug gage. A plug gage containing various types of slots, counterbores, and cutouts which will clear protrusions in the hole being gaged.

reference dimension. Dimension, usually without tolerance, used only for information purposes. It is considered auxiliary information and does not govern production or inspection operations. A reference dimension is a repeat of a dimension or is derived from other values shown on the drawing or related drawings.

regardless of feature size (RFS). A dimensioning concept used when the tolerance is independent of the feature size.

reliability. The probability that an item will perform its intended function for a specified interval under stated conditions.

RFS gage. A gage to inspect relative positions of product features when positional or form tolerance is modified by an RFS callout.

ring gage. Any gage of circular cross section that verifies the size of a single cylindrical or tapered surface.

ring gage, stepped. A plain ring gage that has a step ground perpendicular to its axis. Used in gaging a length to an adjacent shoulder.

Rockwell hardness. Hardness of a material determined by the depth of penetration of an indent or under certain arbitrary conditions.

roundness. Condition of a surface of revolution where (1) for a cylinder or cone, all points of the surface intersected by any plane perpendicular to a common axis are equidistant from that axis and (2) for a sphere, all points of the surface intersected by any plane passing through a common center are equidistant from that center.

runout. Composite deviation of a surface of revolution from the specified form and is measured normal to the surface by full indicator movement through one complete revolution of the part about the datum axis. *See also* runout, circular, and runout, total.

runout, actual. Total variation of an indicated surface from a surface of revolution measured in a direction parallel to the axis of rotation of the indicated surface.

runout, circular. Composite deviation of an individual circular element of a surface of revolution from the specified form as measured through one revolution of the part.

runout, radial. Total variation of an indicated surface from a surface of revolution measured in the direction perpendicular to the axis of rotation of the indicated surface.

runout, total. Composite deviation of all part surface elements from the true geometrical form, attitude, and position.

S

scanning laser beam system. An instrument that can provide very accurate noncontact dimensional measurements of very small objects.

segmented gage. A measuring device with a segmented or discontinuous gaging surface.

self-descriptiveness. A software feature that makes the software easy to understand.

sensitivity. The smallest change in dimension that the inspection system can detect.

sight level. An optical instrument used to establish a horizontal line of sight, i.e., perpendicular to the force due to gravity, and to determine small vertical displacements from it through the use of an optical tooling scale. Also referred to as tilting level or optical tooling level.

simulation. A tool for predicting system performance under different operating conditions by using various modeling techniques and historic data.

sine bar. An instrument used to measure or set acute angles.

Downloaded from http://www.everyspec.com

snap gage. Any gage whose gaging surfaces are flat, parallel, and opposing, separated by a frame or spacer, used for controlling external dimensions—e.g., outside diameters, lengths, and thicknesses.

snap gage, double ended. A snap gage that has the "Go" and "Not Go" gaging members on opposite ends of the same gage.

snap gage, progressive. A snap gage that has the "Go" and "Not Go" gaging elements in succession on the same end of the gage.

snap gage, single ended. A snap gage that has a single gaging member of one-piece construction.

software. That portion of a system required in addition to personnel and hardware. Software includes computer programs and tapes.

solid gage. A measuring device made of one-piece construction.

space variation. Algebraic difference in measurements of adjacent spacings.

space width, actual. Circular width on the pitch circle of any single space.

space width, effective. The effective space width of an internal spline is equal to the circular tooth thickness on the pitch circle of an imaginary perfect external spline that would fit the internal spline without looseness or interference considering engagement of the entire axial length of the spline.

spanner gage. A true position gage designed to check the location of features such as plain holes, threaded holes, slots, or protrusions when the form or dimensional tolerances are modified by an MMC callout.

special measuring equipment. Equipment that must be developed to measure some product elements or features, i.e., not available on the open market.

spherometer. An instrument—by measuring the sagitta of a part of a sphere—used to measure the radius of curvature of an optical surface.

spline. A machine element that consists of integral keys (spline teeth) or keyways (spaces) equally spaced around a circle or portion thereof.

spline gage, composite. A spline gage with a full complement of teeth.

spline gage, progressive. A spline gage that has two or more adjacent gage elements that perform different functions.

spline gage, sector. A spline gage that has two diametrically opposite sets of teeth.

spline plug gage. A spline gage with a full or partial complement of splines of appropriate dimensions for checking internal splines.

spline ring gage. A ring gage with a full or partial complement of splines of appropriate dimensions that is used for checking external splines.

split sphere gage. A measurement transfer device used to transfer inside dimensions. The dimension is recorded by use of a hollow split sphere.

square. A device used for assessing the perpendicularity of interrelated or adjoining surfaces.

standard measuring equipment (SME). Various measuring instruments, devices for transferring dimensions, surface plates and accessories, and coordinate measuring machines, i.e., commercially available measuring equipment usually used in a machine shop.

static analysis. An analysis used to identify any inherent weaknesses in a software program.

steel rule. A basic measuring instrument for making linear measurements.

straightedge. A device, made of hardened steel, used for checking the straightness of a surface or the alignment of distinct points.

straightness. Condition in which an element of a surface or axis is in a straight line.

striding level. An alignment instrument used for especially accurate work.

surface plate. A massive block of cast iron or granite that has been finished to a very high degree of flatness and is used as a platform upon which to perform inspections.

symmetry. Condition in which a feature is—or features are—symmetrically disposed about the axis or center plane of a datum feature.

Downloaded from http://www.everyspec.com

T

taper plug gage. An internal gage in the form of a frustrum of a cone having diameter, taper, and length suitable for internal gaging of taper dimension in accordance with the specifications of the product—i.e., diameter, depth and angle, or taper.

taper ring gage. An external gage, the internal contour of which conforms to the frustrum of a cone having diameter, taper, and length suitable for the gaging of external taper dimensions in accordance with the specifications of the product.

taperlock gage. A plug gage with a tapered shank that fits snugly into a tapered hole in the handle. Used for gaging internal diameters 0.059 in. $<$ diameter $\leq$ 1.510 in.

telescoping gage. A measurement transfer device used to transfer inside dimensions. The expandable portion of the gage opens and closes in the same manner as a telescope.

template gage. Any gage that is merely a guide to the form of work being executed and has either a profile, sighting surface, scribeline, or similar comparison feature.

test glass. An optical surface of a predetermined radius of curvature used as a standard.

test, vendor demonstration. A test performed in accordance with an approved test plan at the vendor's plant before a system is delivered to the user.

test, verification. A test performed periodically after a system is put into operation that uses verification standards to confirm that the system is performing as desired.

theodolite. A surveying instrument used to measure angles in both the horizontal and vertical planes.

thread comparator. An optical comparator used to examine thread dimensions.

thread plug gage. A complete internal thread gage of either single- or double-ended type—comprising a handle and threaded gaging member or members—with a suitable locking means.

thread ring gage. An external thread gage employed for the size control of threaded work, with means of adjustment provided.

thread snap gage. A gage with two sets of rolls with threads cut in them used to inspect threads. The "Go" rolls inspect the threads for lead, maximum pitch diameter, and major diameter. The "Not Go" rolls check the minimum metal limit and the thread form.

tilting level. *See* sight level.

tolerance. Deviation from the specified (basic) size of the feature that will still permit the proper assembly and functioning of mating parts. A tolerance is specified as "+" or "−" from the basic dimension.

toolmaker's knee. An angle block used for small precision products. The sides and faces are ground square within 0.0001 in. The legs are of different lengths to accommodate workpieces of different sizes.

toolmaker's microscope. An optical basic engineering instrument for measuring and inspecting small parts.

tooth clearance, actual. Circular thickness on the pitch circle of any single tooth, considering an infinitely thin increment of axial spline length.

tooth clearance, effective. The effective tooth clearance of an external spline is equal to the circular space width on the pitch circle of an imaginary perfect internal spline which would fit the external spline without looseness or interference, considering engagement of the entire axial length of the spline.

tooth spacing. Measured distance between corresponding points on adjacent teeth of a gear.

tooth thickness, gear. Circular thickness of a specified diameter or tooth height.

top-down software design. A program that starts at the macro level of program definition and is deductively written to the micro or lower function levels.

trilock gage. A plug gage that is attached to a handle by three wedge-shaped locking prongs. Used for gaging internal diameters 0.760 in. $<$ diameter $\leq$ 8.010 in.

true position gage. A gage used to check the location of a feature relative to a datum or to another feature within a pattern of features.

twin ring gage. A ring gage in which the "Go" and "Not Go" elements are built into a single frame.

U

ultrasonic measurement technique. An indirect measuring technique to determine the thickness of a range of materials.

Downloaded from http://www.everyspec.com

universal measuring machine. A device that—in addition to coordinate measurement—can check product contours, tapers, radii, roundness and squareness.

V

V block. A precisely made parallelepiped of hardened tool steel into which two V grooves have been cut. Its major purposes are to restrain (hold) cylindrical products and to locate precisely their axes.

verification and validation test. A major, comprehensive test performed on software.

vernier caliper. A measuring device that consists of a graduated rule known as a beam, a fixed jaw called the base or cross beam, and a sliding jaw.

W

walk-throughs. A technique used by programmers to review the design or program with their peers.

wear allowance. Extra material left on gaging surfaces to accommodate the wear expected during its useful life.

wear limit. The point, i.e., dimension, of wear at which the gage must be removed from service.

wire-type gage. A plug gage in which the diameter of the gaging member is small and cylindrical throughout its length. Used for gaging internal diameters 0.010 in. $<$ diameter $\leq$ 1.010 in.

wire-type plug gage. A plug gage that comprises a gaging member of straight cylindrical section throughout its length and held in a collet-type handle.

Woodruff keyway. A slot with the cross section of a circle.

worm. A short revolving screw whose threads gear with the teeth of a worm wheel or rack.

worm gear. A gear of a worm and a worm wheel working together.

X

X-ray spectrometry for coating thickness measurement. A method for the determination of a film based on the combined interaction of the coating and substrate when excited by incident X-radiation to cause the emission of secondary radiations characteristic of the elements that compose the coating and substrate.

Downloaded from http://www.everyspec.com

INDEX

A

Aberration, chromatic and spherical, 4-8
Abuse of inspection equipment, 2-1
Acceptance check plug gages. *See* Gages, types of
Addendum comparator, for measuring gear tooth thickness, 6-35, 6-36
Adiabetically expanding perfect gas, 4-42
Air gage systems, free flow and back pressure, 4-42
Algorithm evaluation test, 10-11
Alignment collimator, 4-15—4-16
  definition, 4-15
Alignment gage. *See* Gages, types of
Alignment instruments, automatic and photoelectric, 4-25
Alignment polarimeter, 4-27
Alignment telescope, 4-11, 4-13
  definition, 4-11
  sensitivity of, 4-11
Alignment transit, 4-13
  cross-axis-telescope transit squares, 4-13
  description, 4-13
  jig transit, 4-13
  transit squares, 4-13
Alloying, 2-25, 2-28, 2-29
Aluminum, 2-25
Ammunition
  gages for, 9-6—9-10
  specification for, 1-3
Analyzers, for debugging software, 10-7
Analytical modeling, 10-12
Angle blocks
  definition, 3-19
  measuring iron, 3-22, 3-24
  slotted, 3-22, 3-23
  toolmaker's knee, 3-22, 3-25
  universal right, 3-19, 3-22
Angularity, definition, 2-2
Annealing methods, 2-25, 2-27
  full, 2-25
  normalizing, 2-27
  spheroidizing, 2-27
  subcritical, 2-27
Auditing, 10-12
Autocollimation, 4-16
Autocollimation conversion unit, 4-19, 4-21
Autocollimator, 4-10, 5-11, 5-14
  definition, 4-10
  plus alignment polarimeter, 4-27—4-28
  sensitivity of, 4-11
  with optical polygon, 6-16
Automated inspection equipment, Chapter 10
  definition, 1-2
Automatic alignment polarimeter, 4-27, 4-28
Automatic alignment telescope, 4-26
Automatic autocollimator, 4-25—4-26, 4-28
Automatic design checker, for software, 10-11
Automatic optical probe, 4-29
Automatic pneumatic gaging systems, 4-42
Automatic tooth-spacing checker or comparator, 6-10, 6-11
Autoreflection, 4-16
Axle mirror, 4-16
Azimuth axis, 4-13

B

Back pressure air gage system, 4-43
  compared with free flow gages, 4-43
Backlash, 6-36, 6-37
  in gears, definition, 6-37
  indicator methods for, 6-37
  measurement of, 6-34
  normal, definition, 6-37
  use of gear-tooth vernier caliper for, 6-37. *See also* Gear-tooth vernier caliper
  variation in, definition, 6-37. *See also* Gears, gear tooth form defects
Backscattered radiation, 5-19
  method for measuring coating thickness, 5-26
Barrel chambers, of small arms, 1-3, 9-1—9-5
Beam separation, 4-29
Beam trammels, 3-11, 3-12
  accessories, 3-12
  definition, 3-11
Bench comparator, 9-12, 9-13, 9-14
  C-frame, 9-12
Beta backscatter method of measuring material (rubber and elastomeric) thickness, 5-19—5-20. *See also* Backscattered radiation
Bifurcated fiber-optic probe, 4-34, 4-35
Black oxide, used in corrosion prevention, 2-24
Bosses, 2-2
Built-in test (BIT), 10-8
  equipment (BITE), 10-2, 10-8

C

Calibration system, 2-32, 2-33
  of inspection equipment, 2-33

Downloaded from http://www.everyspec.com

of standards, 2-32
of automatic inspection system, 10-3
requirements, 2-1
Calipers
definition, 3-8, 6-32
firm joint, 3-8
hermaphrodite, 3-11
inside, 3-8, 3-9
outside, 3-8, 3-9
screw-adjusting, 3-8
spring, 3-8
transfer, 3-8, 3-9
vernier, 3-7, 4-2
Cams, used with clamp, 7-67
types, 7-67
Carburizing, pack and gas, methods of case hardening, 2-27
Cartridge case profile gage. *See* Gages, types of
Chart gage. *See* Gages, types of
Chucks, magnetic and vacuum, 7-69
Clamps, 7-64—7-67
design and specification of, 7-64
lever, classes of, 7-65
hook, definition, 7-65, 7-66
power activated, 7-67
quick-acting, 7-67
with cams, 7-67
with knob, 7-67
with toggle, 7-67
with wedging parts, 7-67
screw, definition, 7-65
swing, definition, 7-65
nonmechanical, 7-69
strap or plate
definition, 7-65
Coating, 2-24
methods for measurement, 5-25
destructive methods
coulometric method, 5-25
cross-sectional method, 5-25
nondestructive methods
beta backscatter method, 5-26
magnetic methods, 5-26
X-ray spectrometry, 5-26
thickness, 5-25
Collimated light, 4-10
Collimator
alignment. *See* Alignment collimator
used with ellipsometer, 5-18
used in the measurement of focal length, 5-2, 5-3
Combination square, definition, 3-2
Commercial inspection equipment, 2-19
Commonality, of software programs, 10-9
Comparators, mechanical. *See* Gages, types of
Composite error
definition, 6-29
measurement, 6-29
Composite spline gage, 8-3. *See also* Gages, types of
Computer-aided inspection system (CAIS), 1-1, 2-18, 10-2—10-14
controllers for, 10-6—10-7
definition, 10-2, 10-6
factors in selection of, 10-7—10-9
Concentricity
definition, 2-3
requirement, conformance to, 2-3
Conditioning, textiles (for testing), 1-4
Configuration
control, 1-1, 1-2
management, 1-1, 1-2
Control system, components of, 10-6—10-7
Coordinate measuring machines (CMM)
advantages and disadvantages, 3-35
definition, 3-35
elements of
staging table, 3-35
movable member ("gage head"), 3-35
displacement measuring device, 3-35
equipped with dial indicators, 3-35
Moire fringe concept, use of, 3-35
universal measuring machines, 3-37, 3-39
definition, 3-37
types of, 3-37
with automatic printout, 3-35
with computers, 3-37, 3-38
with electronic measurement and digital readout, 3-35
with optical comparators, 3-35
Corrective maintenance (for automated inspection systems), 10-6
Correctness, of software used in automated inspection equipment, 10-9
Corrosion
of inspection equipment, 2-1, 2-24
during use, 2-24
during storage, 2-24
Costs
inspection, 2-23
maintenance, 2-23
material selection, 2-23
of manufacture, 2-28
replacement, 2-23
Cross-axis-telescope transit squares. *See* Alignment transit
Cube mirror. *See* Optical cube
Customary units, US, 1-2
Cyaniding, method of case hardening, 2-27
Cylindricity, definition, 2-2

Downloaded from http://www.everyspec.com

D

Datum
  definition, 2-2
  feature, 2-2, 2-3, 2-21, 2-23
  reference frame, 2-19, 2-20, 7-59
  specification of, 2-5
Depth, 2-4
Design
  of inspection equipment, 2-1, 2-5, 2-21—2-33
  principles of gage design, 2-19—2-23
  product rebuild, 2-21
Dial bore gage, 7-2. *See also* Gages, types of, mechanical comparator
Dial indicator, 5-20, 6-21
  as a mechanical comparator, 9-12
  definition, 3-33, 3-34
Diameter
  external, 2-9
  internal, 2-9
Dimension(s), 2-3
  ANSI standards, 2-1
  characteristics, 2-1, 2-21
  inspection of, characteristics, 2-5
  product, 2-29
Direct current conduction method, 4-44
Dividers, 3-9, 3-10
  definition, 3-9
Documents on design of inspection equipment, 1-2—1-3
Drawing practices, uniform, 1-2
  engineering and associated lists, 1-2
  product, 2-3, 2-4, 2-21

E

Eberhardt fine thread measurement
  method, 5-22
  device, 5-23
Economic considerations, 2-10
Eddy current test system, 4-43, 5-26
Elastomeric materials, 5-19
Electric current, as a test method, 4-43
Electronic column spherometer, 5-8, 5-9
Electronic microindicator, 3-37
Electro-optical
  instruments, 4-34
  systems, 4-36
Electroplating, 2-25
Ellipsometer, 5-18
Engineering change proposal (ECP), 2-5
Environment simulator, 10-11
Environmental factors
  dust, 2-8
  fumes, corrosive, 2-8
  humidity, 2-8
  temperature, 2-8
  vibration, 2-8
Error-prone analysis, 10-12
Errors
  alignment, 3-2
  associated with the use of steel rules, 3-2
  correcting, for open setup inspections, 3-37
  due to manufacturing tolerances, 10-4
  identification of, using RFS gage, 7-43
  in single-flank testing: transmission, profile, and lead, 6-31
  in software programs, 10-12
  in surface plate use, 3-15
  percentage and costs, 2-18
  space width tolerances for, in a ring gage, 8-19
  sources of, in laser scanning measurements, 4-38, 4-39
  with use of coordinated measuring machines, 3-33
Expandability, of software, 10-9
Eyepieces, 4-19, 4-20

F

Fail-safe capability, of automated inspection equipment, definition, 10-2
Feature, definition, 2-2
  product, 2-4
  relation gaging, 7-52
  size, 7-47
Feeler gage. *See* Gages, types of
Fiber-optic probe, 4-34
  bifurcated, 4-34
First-order optics, 5-2
Fit allowance, 7-21
Fixed-limit-type gages, 2-29
Fixture gage. *See* Gages, types of
Fixtures, staging, 4-5, 4-8
  rotary base with self-centering jaws, 4-5—4-7
  rotary glass staging fixture, 4-5, 4-7
  V blocks, centers, and riser blocks, 4-5
Flatness, 2-2
  definition, 2-2
Flexibility, quality of software, 10-9
Flush pin gage. *See* Gages, types of
Focal collimator
  definition, 5-2
Foolproofing, in location during inspection, 7-64
Form, requirements, 2-2

Downloaded from http://www.everyspec.com

Forty percent rule, 2-18, 2-30, 9-11, 9-12. *See also* Gage, "Not Go"
Frame, datum reference, 2-20, 2-21, 2-22, 7-59
Free flow air gage system, 4-42
Fringe distortion, 4-32
Fringe shift, 5-16
Front surface mirror, 4-16
Full indicator movement (FIM), 2-3
Functional gage. *See* Gage, functional
Functional testing, 10-12
Functional tooth thickness, measurement of, 6-30—6-34

G

Gage
  definition, 1-1
  depth, 3-1
  design, 1-1, 1-2
    philosophy of, 2-19—2-22
  functional, 2-19, 2-20, 2-21, 2-29, 7-43, 7-47, 7-70
  general-purpose, 1-2
  "Go", 1-3, 2-20, 2-21, 2-22
    composite, 2-21
  master, 2-29
    definition, 2-32
  multi-piece, 2-18
  "Not Go", 1-3, 2-20, 2-30
    functional, 2-19, 2-20, 2-29
      fixed element, 2-20
      40% rule, definition, 2-29, 9-11
  required for spline inspection, 8-3
  segmented, 2-10
  special, 2-5
  threadsetting, 2-32
  vernier depth, 3-1, 3-2
Gage, American National Standard External Threads, 1-3
  unified standard, 1-3
Gage blocks
  accuracy of, 3-16
  angular, use of, 3-16, 3-17
  classification criteria: style, grade, class, and type, 3-16
  definition, 3-15
  proper alignment of, 3-17
Gage maker's tolerance 7-1, 7-11, 8-13
Gages, types of
  acceptance check plug gage, 9-11, 9-9
    for cartridge case profile gages, 9-11
    for alignment gages, 9-6
      in small caliber weapon chambers, 9-7
      in large caliber weapon chambers, 9-9
  alignment gage, 9-5—9-11
    acceptance checks for, 9-6, 9-7, 9-9
    complete round alignment gage, definition, 9-6
    conditions causing significant wear, 9-6
    definition, 9-5
    for large caliber ammunition, design procedure, 9-8—9-10
    for small arms ammunition, design procedure, 9-6—9-8
  cartridge case profile gage, 9-5
    design of, 9-10—9-11
    definition, 9-10
  chart gage, 4-5—4-8
    definition, 4-5
    overlay, 4-5
    overscreen, 4-5
    replacement, 4-5
    standard, 4-8
  feeler gage, 3-7
    as a "Not Go" gage, 3-7
    definition, 3-7
  fixture gage, definition, 7-64
    clamping on, 7-64
    design of, 7-64, 7-69, 7-70
      example, 7-70, 7-71, 7-72
        with inspection requirement, 7-71
    "Go", 7-64
    hardware used with, 7-69
    "Not Go", 7-64
    product location and, 7-64
  flush pin gage, 2-30, 7-28—7-38
    design of, 7-30, 7-34—7-35
      example 7-35—7-36
    principles of operation, 7-29
    types, 7-30—7-34
      special, 7-35
        built-up, 7-33
        design criteria for, 7-35
        for drilled holes, 7-32
        for tapped holes, 7-34
        internal, 7-33
        multiple-pin, 7-32
        spring loaded, 7-33
        taper, 7-33
      standard, 7-30
        bar, 7-31
        barrel, 7-30
        bar-spanner, bar-countersink 7-31
  height gage, 3-1, 3-2, 3-16, 3-17, 3-18
    accuracy of, 3-18
    definition, 3-16
    surface plates, 3-16
    uses, 3-17
    with Vernier scale, 3-17, 3-18
  interchangeability gage, 9-1, 9-11—9-12

Downloaded from http://www.everyspec.com

definition, 9-11
design of, 9-11—9-12
keyslot gages, 8-22
design of, 8-22
plug gages, 7-2
types, 8-22
Woodruff, 8-22, 8-23
magnetic flux gage, 5-26
magnetic pull-off gage, 5-26
mechanical comparators (comparator gages), 9-1, 9-12—9-16
bench
definition, 9-12
shapes of contact points for, 9-14
C-frame type, 9-12, 9-13, 9-14
work-holding centers for, 9-13
definition, 9-1, 9-12
internal (dial bore gage), 7-2
plate, 9-14, 9-15
definition, 9-14, 9-15
portable
definition, 9-14
for external dimensions 9-14, 9-15, 9-16
for internal dimensions 9-15, 9-16
pinhole location gage, 2-21
planer gage, 3-30, 3-32, 3-33
plug gages, 1-3, 2-25, 7-2—7-15
design of, 7-7, 7-16
example, 7-14
"Go" elements, 7-1, 7-2, 7-3, 7-4, 7-5, 7-7, 7-8, 7-10, 7-12, 7-14, 7-15, 7-16, 7-17, 7-19, 7-20, 7-22, 7-26, 7-27
"Not Go" elements, 7-1, 7-2, 7-3, 7-4, 7-5, 7-7, 7-8, 7-10, 7-14, 7-15, 7-16, 7-17, 7-19, 7-20, 7-22, 7-26, 7-27
progressive (coaxial). *See* Gages, types of, true position, progressive plug
special, 7-5
cylindrical stepped, 7-6
flat, 2-30, 7-5—7-6
for internal diameters, 7-5
for slots and noncircular holes, 7-5
pilot, 7-5
recessed, 7-7
taper, 2-30, 7-5, 7-7
standard, 7-2
annular, 7-4, 7-5
taper lock, 7-3, 7-4
trilock, 7-4
wire-type, 7-2, 7-3
receiver gage. *See* Gages, types of, true position, receiver gage
ring gage, 2-25, 7-16, 7-20, 7-21
design of, 7-19, 7-20, 7-21
example, 7-20, 7-21
"Go", 7-16, 7-17, 7-18, 7-19, 7-20
"Not Go", 7-16, 7-17, 7-18, 7-19, 7-20
special, 7-17
twin, 7-17
taper, 7-17, 7-18
stepped, 7-18, 7-19
standard, 7-16
flanged, 7-17
flanged, with ball handles, 7-17
solid, one-piece, 7-16, 7-17
solid, with bushings, 7-16
snap gage, 7-20, 7-22—7-28
built up, 7-23, 7-24
design of, 7-25—7-28
example, 7-26—7-28
fixed nonadjustable
double ended, 7-22
single ended, 7-22
"Go", 7-20, 7-22, 7-25, 7-26, 7-27
"Not Go", 7-20, 7-22, 7-25, 7-26, 7-27
plain adjustable, 7-22, 7-23
progressive, 7-22
special, 7-25
spline gage, 8-3
composite, 8-3
sector, 8-3, 8-4
progressive, 8-3
spline plug gage
definition, 8-5
types and uses of, 8-5
composite, 8-7
sector, 8-7
major diameter, 8-10
tapered tooth composite, 8-10
tapered tooth sector, 8-11
design of, 8-6, 8-12—8-14
example of, 8-12, 8-14
spline ring gage
definition, 8-14
types, table of, 8-3, 8-10
composite, 8-15
tapered tooth master for, 8-17
major diameter fit, 8-16
sector ("Not Go"), 8-17
tapered tooth master for, 8-18
design of, 8-19—8-21
example, 8-20—8-21
tapered tooth plug gage, 8-5, 8-10, 8-13
template gage, 7-39—7-42
design of, 7-39, 7-41—7-42
example, 7-42
for depths, lengths, and widths, 7-39, 7-40
alternate designs for, 7-41
for profiles, 7-39
product configuration and, 7-30

Downloaded from http://www.everyspec.com

true position gage, 7-43—7-63
design, 7-44
"Go", 7-43
Least Material Condition (LMC) special true position gages, 7-43, 7-61—7-63
definition, 7-43
design, example of, 7-61—7-63
with inspection requirement, 7-62
"Go" elements, 7-61, 7-63
"Not Go" elements, 7-61, 7-62, 7-63
Maximum Material Condition (MMC) special true position gage, 2-22, 7-43, 7-44
definition, 7-43
design, example of, 7-59, 7-60
with inspection requirement, 7-59
inspection of weapon barrel with, 9-3
pinhole location gage, 2-22
"Not Go", 7-43
progressive (coaxial) plug gage
definition, 7-44
design of, 7-44, 7-46
example, 7-46—7-47
with inspection requirement, 7-45
"Go", 7-46, 7-47
"Not Go", 7-46, 7-47—7-51
receiver gage, 2-20, 2-21, 7-47—7-51
definition, 2-20
design of, 7-47—7-51
example, 7-49—7-51
with inspection requirement, 7-49
"Go", 7-48, 7-51
"Not Go", 7-48, 7-51
regardless of feature size gage (RFS), 7-43—7-44
spanner gage, 2-21, 7-52—7-60
definition, 7-52
design of, 7-52, 7-54
examples
two-pin gage for feature relation gaging, 7-54, 7-55
with inspection requirement, 7-54, 7-55
multiple pin gage for feature relation and location gaging, 7-55, 7-59
with inspection requirement, 7-56
female, 7-52
"Go", 7-52, 7-53, 7-54, 7-55, 7-56, 7-59, 7-60, 7-63
male, 7-52
"Not Go", 7-52, 7-53, 7-54, 7-55, 7-56, 7-59, 7-60
weapon chamber gage, 9-1—9-5
design procedure for, 9-1, 9-2
plugs for, 9-1
required for large caliber chambers, table, 9-5
required for small caliber chambers, table, 9-4, 9-5
wear limit gage
checks of alignment gages, 9-6
guidelines for, 9-7, 9-9
Woodruff keyslot gage, 8-22, 8-23
Gages, split sphere. *See* Transferring devices
Gages, telescoping. *See* Transferring devices
Gaging
compared with measuring, 3-1
element, 7-43, 7-45
functional, 2-3, 2-22, 7-70
pneumatic. *See* Pneumatic gaging system
use of, 8-3
Gears, 1-2, 2-9
blanks, 1-4
classification of, 6-2, 6-4
composite action method of gear inspection, 6-29, 6-30
advantages and disadvantages of, 6-31
composite action gear checker, 6-29
definition, 6-2
gear tooth profile
nomenclature, 6-3
tolerance, 6-19
gear tooth form defects, 6-4
backlash variation, 6-36; 6-37
lead variation, 6-21
measuring methods, 6-21
checking machine, 6-23
pitch variation, 6-9, 6-10
profile variation, 6-17
measuring methods, 6-17, 6-18
interpretation of results, 6-19
runout, radial and axial, 6-4
methods for measuring, 6-4, 6-5
indicating overpins, 6-4
probe check
single, 6-4, 6-6
double, 6-5, 6-7
rolling checks, 6-5, 6-8
contact pattern check, 6-8
inspection of, 1-3, 6-4
major types of, 6-3
performance tests of, 6-4
process control in manufacture of, 6-4
single-flank testing, 6-31, 6-32
tooth contact pattern, 6-36
for spur, helical, and herringbone gears, 6-36
for bevel and hypoid gears, 6-36
tooth thickness variation, 6-32, 6-34
methods of measurement, 6-32
Gear roll testing. *See* Gears, composite action method of gear inspection
Gear-rolling fixture (composite action gear checker), 6-29, 6-30
Gear-tooth vernier caliper, 6-37
Generality, of software used in automated inspection

Downloaded from http://www.everyspec.com

equipment, 10-9
Geodetic survey triangulation, 4-12
"Go" and "Not Go" gaging members
definition, 7-2
"Go" gage elements, 7-1, 7-2, 7-3, 7-4, 7-5, 7-7, 7-9, 7-10, 7-16, 7-17, 7-18, 7-19, 7-20, 7-22, 7-25, 7-27, 7-28, 7-43, 7-45, 7-47, 7-48, 7-50, 7-51, 7-52, 7-54, 7-55, 7-61, 7-64, 8-2, 8-3, 8-5, 8-6, 8-7, 8-10, 8-13, 8-14, 8-15, 8-20, 8-22, 8-23
Goniometers. *See* Precision spectrometers
Grid chart gage, 4-8
Grounding. *See* Safety

H

Halation effect, 4-2
Hand method, for measuring fabric length, 5-20
Hardening
definition, 2-27
methods
full body, definition, 2-27
case, 2-27
techniques, mentioned, 2-23, 2-25
Hardness, 2-23, 2-25, 6-2, 6-3
and degree of temper, 2-28
and surface finish, 2-32
design precautions to aid heat treating, 2-26
heat treating, 2-25
in gear classification, 6-2
recommended values, table of, 7-13
specified in gage drawings, 2-25
Height gage. *See* Gages, types of
Helium
lamps, light, 4-8
Hermaphrodite caliper, definition, 3-11. *See also* Calipers
Holes, 2-2
counterbored, 2-9
counterdrilled, 2-9
countersunk, 2-9
press-fit, 2-3

I

Image dissector, used in electro-optical system, 4-36, 4-37
accessories for, 4-37
accuracy of, 4-37
advantages of, 4-37
Index, measuring methods, 6-13
algebraic summation of pitch variations obtained from tooth-to-tooth measurements, 6-17
index measuring machines, 6-13, 6-14
indexing heads or rotary tables, 6-15
optical polygon with autocollimator, 6-16
theodolites, 6-16—6-17
Index error, 6-15, 6-17
results of, 6-15
Index variation, 6-15, 6-16
Indicator method, for measuring backlash variation, 6-36, 6-37
Indirect measuring equipment, 4-43
direct current conduction, 4-44
eddy current test system, 4-43
magnetic field testing, 4-44
penetrating radiation, 4-44
ultrasonic measurement, 4-43
Infinite thickness, definition, 5-19
In-line post-process automatic inspection, 10-1
In-process automatic inspection, 10-1
Inspection
by attributes (gaging), 2-8
by variables (measuring), 2-8
costs, 2-23
method used for specific element, 2-9, 2-10
plan, 2-18
sampling, 2-18
speed of, 2-18
Inspection equipment
commercial, 2-19
considerations in selecting, 2-10
special purpose, 2-19
useful life of, 2-18
Instruction level simulator (ILS), 10-11
Instrument stands, 4-22, 4-23
Interchangeability gage. *See* Gages, types of
Interference bands 4-8, 4-9
Interferometers, 4-30
laser, 4-30, 4-31
pointing, 4-31, 4-32
compared to autocollimator, 4-31
systems, 4-32
accuracy of, 4-33, 4-34
Interferometry, 4-1
uses of, 4-32
International system of units (SI), 1-2
Interrupted diameter, 1-2
Involute profile-measuring instruments or machine, 6-17

J

Jig transit, 4-13, 4-14

K

Keyslot gages. *See* Gages, types of
Keyways, 2-9, 4-8, 7-2, 8-22

Downloaded from http://www.everyspec.com

parallel, 8-22
spaces, 8-2
standard, 4-8
tapered, 8-22
Woodruff, 8-22
Knurls, 1-2, 2-9, 8-2, 8-24
Knurled
cylindrical body, 7-35
external surface, 8-21
handle, 9-3, 9-5, 9-12
parts, 6-1
surface, 7-16, 7-19, 7-20, 7-29

L

Laser alignment system, 4-30
Laser interferometer, 4-30
Laser range finder, 4-28, 4-29
definition, 4-28
Law of Rectilinear Propagation, 4-2
Law of Reflection, 4-2
Law of Refraction, 4-2
Lead variation, definition, 6-21
Least Material Condition (LMC), 2-22, 3-45
definition, 1-2
gage elements, 9-4
tolerancing sizes, 7-44
Least Material Condition (LMC) special true position gage. *See* Gages, types of, true position
Lens bench (optical bench), 5-3
techniques for measuring focal length, 5-2, 5-3
Leveling mirror, 4-16, 4-17
Life span of inspection equipment, 2-18
Light sources, 4-8
Location, 2-10
at the machine, 2-3
coaxial, 7-44
feature, 7-43, 7-44, 7-52, 7-53, 7-55, 9-2
in assembly area, 2-10
in the inspection department, 2-8
in receiving department, 2-10
of test lens, 5-2
of pins, 3-44, 3-45, 7-32, 7-52
of product during inspection, 7-64
of gage elements, 2-19, 2-20
of remote gage head, 4-41
requirements, 2-2

M

Magnesium fluoride interference films, 5-18
Magnetic field testing, 4-44
Magnetic flux gages, 5-26
Magnetic pull-off gages, 5-26
Maintainability, of automated inspection equipment, 10-2
factors that improve
debugging capability, 10-2, 10-3
modular design concept, 10-2
simplicity, 10-3
Manual alignment instruments, 4-10
Master check gages, 2-29, 2-32
Material selection, 2-23, 2-29
Maximum Material Condition (MMC), 2-1, 2-5, 2-20, 2-21, 2-22, 3-45, 7-47, 7-48, 7-50, 7-51, 7-54, 7-55, 7-57, 7-58, 7-59, 7-60, 7-61
advantages and disadvantages, 2-22
callouts, 2-20, 2-21
compared to RFS, 2-22
definition, 1-2
gaging element, 9-1, 9-4
product, 2-29
Maximum Material Condition (MMC) special true position gage. *See* Gages, types of, true position
Measurement methods, for coating thickness, 5-25
Measuring equipment
standard, characteristics and applications, 2-11, 2-17
special, characteristics and applications, 2-11, 2-17
Mechanical comparators. *See* Gears, types of
Micrometers
accuracy of, 3-9, 3-12, 5-13
anvil, 3-5
definition, 3-5, 3-7
supermicrometer, 3-5
indicating micrometer, 3-5
inside micrometer, 3-5, 3-6, 5-6
inside micrometer calipers, 3-5
outside micrometers, 3-5
slide, 5-3
sources of error associated with the use of, 3-5
spindle, 3-5
thimble, 3-5
Minimization, as a design principle, 2-20
Minimum clearance, 9-11, 9-12
Minimum neutral zone, 9-11
Minimum number of hits, 3-35, 3-36
definition, 3-35
Modularity, of software, 10-9
Moire fringe concept (used in electronic coordinate measuring machines), 3-35
Monochromatic light, 4-8

N

Newton's rings (Newton's fringes), 5-8
Nitriding, method of case hardening, 2-27
Nodal slide, 5-3, 5-4, 5-5

Downloaded from http://www.everyspec.com

Nondestructive testing (NDT) techniques, 4-44, 5-1
methods, 5-25
"Not Go" gage elements, 7-1, 7-2, 7-3, 7-4, 7-5, 7-7, 7-8, 7-10, 7-11, 7-12, 7-14, 7-15, 7-16, 7-17, 7-18, 7-19, 7-20, 7-21, 7-22, 7-24, 7-25, 7-26, 7-27, 7-28, 7-43, 7-45, 7-47, 7-48, 7-50, 7-51, 7-52, 7-54, 7-55, 7-57, 7-58, 7-61, 7-64, 8-2, 8-3, 8-4, 8-5, 8-8, 8-9, 8-10, 8-13, 8-14, 8-15, 8-17, 8-18, 8-20, 8-21, 8-22, 8-23

O

Open-jet method of air gage sensing, 4-40, 4-41
Open setup inspections
applications, examples, 3-40, 3-41, 3-42, 3-43, 3-44
definition, 3-37
procedures for, 3-37, 3-39, 3-45
Operator
error, 2-22
skill, 2-22
Optical bench (lens bench), 5-3
Optical comparator. *See* Optical inspection instruments
Optical components for fire control instruments, 1-3
Optical cube, cube mirror, 4-17
Optical elements and system parameters, 5-2
angles, 5-13
comparison standards, 5-14
divided circles, 5-13
focal length, 5-2, 5-3, 5-5
nodal slide, 5-3, 5-4
optical bench (lens bench), 5-2
optical coating thickness, 5-15, 5-18
radius of curvature, 5-5
autocollimator and interferometer, 5-11
interferometer, 5-11, 5-12
microscope and lens bench, 5-6
spherometer, 5-7, 5-8
template, 5-6
test glass, 5-8
surface quality, 5-19
thickness, 5-13, 5-15
Optical equipment, 4-2
classification of, 4-2
Optical flat. *See* Optical inspection instruments
Optical inspection instruments, 4-2
toolmaker's microscope
definition, 4-2
sources of error in application, 4-2
optical comparator, 3-35, 4-4, 4-5, 7-39, 7-64
definition, 4-4, 4-5
optical flat
definition, 4-8
disadvantages of, 4-8
Optical magnifying device, 3-37
Optical measuring techniques, uses of, 4-1
Optical micrometer, 4-19
Optical polygon with autocollimator, 6-16
Optical sensor, 3-35
Optical square, 3-26, 4-17
Optical staging fixtures, 2-24
Optical tooling
accessories, 4-15
instruments, 4-21, 4-22
scales, 4-21, 4-22
systems, definition, 4-10
targets, 4-20
Optical tooling level. *See* Sight level

P

Paddle gage, *See* Gages, types of
Parallax, 4-2
Parallelism, 2-2
definition, 2-2
Parallels, categories of, 3-19
bar parallels, 3-19
box parallels, 3-19, 3-20
tapered parallels, 3-19, 3-21
Part, geometry, 2-8
size, 2-8
Pearlite, 2-25
Pentaprism, 4-17, 4-19
Perpendicularity (squareness), 2-3, 2-10, 2-22, 3-26, 3-28, 3-30, 7-52, 9-8
definition, 2-2
Photodiode array, 4-36
Pins, used to measure gear teeth, 6-34, 6-35
press-fitting, 7-44
Pitch checking instruments, for measuring gear tooth spacing, 6-9, 6-10
Pitch variation, 6-9, 6-10
Planer gages, 3-30, 3-32, 3-33
definition, 3-30
as transferring device, 3-30, 3-33
Plate comparator (plate gage). *See* Gages, types of
Plate, surface, 1-2
Plating, use of chromium, 2-24
electroplating, 2-25
Plug gages. *See* Gages, types of
Plumbing mirror, 4-16
Pneumatic comparator, 4-40
Pneumatic gaging system, 4-40
applications of, 4-40
back pressure system, 4-41, 4-42
contact method, 4-41
free flow system, 4-41, 4-42
open-jet method, 4-41
principle elements of, 4-40
Pointing interferometer, 4-31, 4-32

Downloaded from http://www.everyspec.com

Portable comparator, 9-12. *See also* Gages, types of
  definition, 9-14
Portable pitch-checking instruments, 6-10
Portable profile-measuring instruments, 6-19
Position requirements, 2-2
  definition, 2-2
Positional tolerance, 7-48, 7-50, 7-51, 7-54, 7-55, 7-57, 7-60, 7-62
Post-process automatic inspection, 10-1
Precision spectrometers, 5-13
Press-fitting pins, 7-44
Preventive maintenance, of automated inspection systems, 10-6
Process control, 6-3
Product
  assurance-mission, 1-1, 2-1
  design
    definition, 1-1
    principles of, 2-19, 2-20
    dimensions, 2-29
  drawing, 2-4
  feature size, 7-47
  tolerance, 2-29, 7-15, 8-5
    concepts, 2-20. *See also* Maximum Material Condition *and* Regardless of feature size *and* Least Material Condition
  with interrupted diameters, definition, 6-2
Profile
  definition, 2-2
  irregular, 2-9
  measuring, 6-17
  symmetrical, 2-9
  with arcs, 2-9
Progressive plug gage. *See* Gages, types of, true position, progressive plug
Progressive spline gage, 8-3. *See also* Gages, types of
Projected tolerance zone
  definition, 2-3
  use of, 2-6, 2-7
Protractors, 3-2, 4-8
  plain, 3-2, 3-3
  universal bevel, 3-2, 3-4

Q

Quality assurance, 1-1, 2-1
  provisions, 2-3, 2-10
Quality control and reliability, 1-4, 10-2
Quenching, 2-26, 2-27, 2-28

R

Radiation, as a test technique, 4-44, 5-26
Radius chart gage, 4-8
Radius, internal and external, 2-9
Recalibration, 2-22
Receiver gage. *See* Gages, types of, true position, receiver
Rectilinear Propogation, Law of, 4-2
Referee decisions, definition, 2-19
Reflection, Law of, 4-2
Refraction, Law of, 4-2
Regardless of feature size (RFS), 2-1, 2-21, 2-23
  advantages and disadvantages of, 2-22
  definition, 1-2
  special true position gage, 7-43
    definition, 7-43
    advantages and disadvantages of, 7-43
Reliability, 10-2. *See also* Quality control
Remote monitoring facility. *See* Safety
Reticles, 4-2, 6-16
  calibrated, 5-2
  collimator, 5-2
  illuminated, 4-10, 4-11, 4-15
  image, 6-16
  prism nose, 4-26
Reticle plane, 4-25
Right-angle eyepiece, 4-20
Ring gages. *See* Gages, types of
Rods, 2-9
Roundness, definition, 2-2
Runout, definition, 2-3, 6-4
  circular, definition, 2-3
  measuring methods, 6-4—6-8
  total, definition 2-3—2-4

S

Safety, 2-33
  explosion-proof design, 2-33
  grounding, 2-33
  remote monitoring facility, 2-33
  weight considerations, 2-33
Sagitta, 5-8
  effective, 5-8
  method, 5-15
Sampling procedures, 1-3
Scanning laser beam systems, 4-37, 4-39
  accessories and options, 4-39, 4-40
  accuracy of, 4-38, 4-39
Screw threads, 2-28, 8-2
  determination of acceptability of, 8-2
  elements of, 8-2
  external, 2-9
  factors considered in inspection of, 8-2
  gaging of, 8-2
  internal, 2-9

Downloaded from http://www.everyspec.com

measuring pitch diameter of, 3-45, 3-46
reference documents, 8-2
standards, 1-3, 2-32
Sector spline plug gage. *See* Gages, types of, spline plug gage
Self-descriptiveness, of software, 10-9
Sensing and indicating devices, 7-69
Sensitivity of an automated inspection system, definition, 10-8
Sharp edge, definition 2-33
Shirley Yarn Diameter Projector, 5-21
Sight level, 4-13, 4-15
definition, 4-13
Simulation, 10-12
Sine bars, 3-30
definition, 3-30
Size
of any feature, 2-2, 7-47
limits, 2-3
Size tolerance, 7-50, 7-52, 7-53, 7-54, 7-60
Slots, 2-3
Snap gage. *See* Gages, types of
Snap ring gage, 8-3, 8-4. *See also* Gages, types of, spline ring gage
Spacing variation. *See* Gears, pitch variation
Span method, for measuring gear teeth, 6-33, 6-34
Spanner gages. *See* Gages, types of, true position
Spectrometry, measurement, 1-4, 5-26
Spherometer, 5-6—5-8
Splines, 1-2, 8-2
definition, 8-2
external, 2-9, 8-4, 8-5
gages required for, 8-3
"Go" and "Not Go" gages for, 8-2, 8-3
inspection of, 8-3
internal, 2-9, 8-3
internal and external, 8-4, 8-5
involute, 1-4
methods of dimensioning, 8-3
terms, symbols, and drawing data for, 8-3
types, 8-2
Spline gage. *See* Gages, types of
Spline plug gage. *See* Gages, types of
Spline ring gage. *See* Gages, types of
Squares
cylindrical squares, 3-27, 3-28, 3-29, 3-30
direct reading, 3-30
definition, 3-27
granite blocks, 3-27, 3-28
optical square, 4-17, 4-18
steel squares, 3-27, 3-28
transit square, 4-13
Staging fixture, 4-6, 4-8
optical, 2-24
types of
rotary base with self-centering jaws, 4-6, 4-8
rotary glass, 4-6, 4-7
V blocks, centers and riser blocks, 4-6
Standard measuring equipment (SME), 1-2, 2-10, 3-1, 3-35
criteria for selecting, 7-1
definition, 1-2
Static analysis of software, 10-12
Steel
alloy, 2-25
carbon, 2-25
fully annealed. *See* Annealing.
Steel rule, 3-1
errors associated with, 3-2
inaccurate alignment, 3-2
parallax error, 3-2
wear on the ends, 3-2
advantages and disadvantages of, 3-2
Stop-cycle automatic inspection, 10-1
Straightedges, 3-30, 6-22
definition, 3-30
leveling straightedge, 3-30
used in profile-measurement/checking, 6-18, 6-19, 6-22
Straightness, definition, 2-2
Stress, 2-27
Stress testing, of computer software, 10-12
Striding level, 4-22, 4-24
Surface plate, definition, 3-13. *See also* Height gages
cast iron, 3-14
granite, 3-14, 3-15
Surface quality, optical component, 5-19
Surfaces, of solid materials
definition, 5-22
error of form, definition, 5-25
flaws, definition, 5-25
lay, definition, 5-23
measured surface, definition, 5-23
nominal surface, definition, 5-23
roughness, definition, 5-23
surface texture, definition, 5-23
waviness, definition, 5-23
Surface, texture, 2-9
Symmetry, definition, 2-3
System independence of software, 10-9
Systematic error, in automated inspection equipment, 10-3

T

Tabs, 2-3
Taper gages, 2-30, 7-17, 7-18. *See also* Gages, types of
Tapered tooth plug gage, 8-5, 8-10, 8-13
Targets, used in optical tooling, 4-20, 4-21

Downloaded from http://www.everyspec.com

TDP (technical data package), 1-1
Temperature, changes, 2-23
Tempering, 2-28
Template gages. *See* Gages, types of
Test coverage analyzer, 10-11
Test data generator, 10-11
Test driver, 10-11
Theodolite, 4-11, 4-12, 4-13, 4-15, 6-13, 6-16
Thermal coefficient of expansion, 2-23
Threads, 1-2. *See also* Screw threads
Tilting level. *See* Sight level
Time-modulated measurement methods, 4-43
Tight mesh, measuring center distance of gear teeth at, 6-34
Tolerance, 2-3, 2-22, 2-28
  applied to knurls, 8-24
  bilateral system, definition, 2-28
  circular runout, 2-3
  concepts, 2-1
  definition, 1-2
  gage, 2-29, 7-1, 7-42, 7-44
  gage maker's, 7-1, 7-11, 8-13
  geometric, 2-22
  manufacturing, 4-2, 10-4
  positional, 2-1, 2-3, 2-21, 7-45, 7-46, 7-50, 7-51, 7-52, 7-53
  product, 2-29, 7-1, 10-7
  requirements, 2-22
  size, 7-44, 7-47
  specified, 2-1, 2-21, 2-8, 2-30
  system, 10-7, 10-8
  tables, 2-30—2-31
  unilateral method, 2-28
  zone, projected. *See* Projected tolerance zone
Tooling bars, 4-22
  horizontal, 4-23
  vertical, 4-24
Toolmaker's knee, 3-22, 3-25
Toolmaker's microscope. *See* Optical inspection instruments
Tool room chart gages, 4-8
Tooth spacing
  measuring methods for, 6-9
    pitch-checking instruments, 6-9, 6-10
      automatic tooth-spacing checker or comparator, 6-11, 6-12
    portable pitch-checking instruments, 6-11
    tooth-spacing tester, 6-12
Tooth thickness, 6-32
  methods of measurement, 6-32, 6-34
Tooth-to-tooth composite variation, measurement of, 6-29
Top-down software design, 10-10
Total composite error, measurement of, 6-30
Tracer attachment, 4-8
Tracer fixture, 4-5
Transducers, 4-42, 5-19
  differential, 4-42
  electric, 4-42
  linear displacement, laser interferometers functioning as, 4-30
  optics and electronic image, 4-34
  variation, 4-42
Transferring devices, 3-4, 3-5
  planer gage, 3-30, 3-32
  split sphere gage, 3-11, 3-12
  telescoping gage, 3-11, 3-12
Transit squares. *See* Alignment transit
Triangulation techniques, 4-29
Trihedral retroreflector, 4-26
True position gages. *See* Gages, types of
Tubing, and pipes, 2-9
Tungsten halogen light sources, 4-8

U

Ultrasonic measurement techniques, 4-43
Unit under test (UUT), 10-13
Universal measuring machines, 3-37, 3-39. *See also* Coordinate measuring machines
  definition, 3-37

V

Validation and Verification (V & V), 10-10
V blocks, 3-22, 3-26, 4-6
Vendor demonstration test, for acceptance of automated inspection systems, 10-5
Verification test, for automated inspection systems, 10-5
Vernier scale, 5-6. *See also* Gages, types of, height gages
Vernier tooth calipers, 6-32, 6-33

W

Walkthrough, review of computer programs, 10-12
Weapon chamber gages. *See* Gages, types of
Wear
  allowance, 2-30, 7-1, 7-11, 7-15, 7-18, 7-19, 7-21, 7-26, 7-44, 7-46, 7-48, 7-50, 7-60
    definitions, 1-2, 2-28, 7-10
  inspection equipment, 2-1, 2-25
  limits, 2-21, 2-30
    definition, 2-28
  resistance, 2-23, 7-48
Wear limit gages
  checks of alignment gages, 9-6

Downloaded from http://www.everyspec.com

guidelines for, 9-7, 9-9
Wedges, used in clamps, 7-67, 7-68
Weight
considerations, inspection equipment, 2-33
light, 2-24
Woodruff keyway, 8-22
Woodruff keyslot gages, 8-22, 8-23
design of, 8-22, 8-24
straight handle, 8-22
V-shaped handle, 8-22

X

X-ray spectrometry, 4-44, 5-26

Z

Zero tolerance, 7-47
Zone
how defined, 2-3
projected tolerance. *See* Projected tolerance

Custodian:
Army — AR

Review activities:
Army — AL, AT, AV, CR, MR

User activities
Army — ER, ME, MI

Preparing activity:
Army — AR

(Project 5220-A222)

 *U.S. GOVERNMENT PRINTING OFFICE: 1991--504-034/50155

Downloaded from http://www.everyspec.com

STANDARDIZATION DOCUMENT IMPROVEMENT PROPOSAL

INSTRUCTIONS

1. The preparing activity must complete blocks 1, 2, 3, and 8. In block 1, both the document number and revision letter should be given.
2. The submitter of this form must complete blocks 4, 5, 6, and 7.
3. The preparing activity must provide a reply within 30 days from receipt of the form.

NOTE: This form may not be used to request copies of documents, nor to request waivers, or clarification of requirements on current contracts. Comments submitted on this form do not constitute or imply authorization to waive any portion of the referenced document(s) or to amend contractual requirements.

I RECOMMEND A CHANGE:	1. DOCUMENT NUMBER MIL-HDBK-204A(AR)	2. DOCUMENT DATE (YYMMDD) 90 November 30 .

3. DOCUMENT TITLE
Design of Inspection Equipment for Dimensional Characteristics

4. NATURE OF CHANGE *(Identify paragraph number and include proposed rewrite, if possible. Attach extra sheets as needed.)*

5. REASON FOR RECOMMENDATION

6. SUBMITTER

a. NAME (Last, First, Middle Initial)	b. ORGANIZATION	
c. ADDRESS (Include Zip Code)	d. TELEPHONE (Include Area Code) (1) Commercial (2) AUTOVON (If applicable)	7. DATE SUBMITTED (YYMMDD)

8. PREPARING ACTIVITY

a. NAME Commander US Army Armament Research, Development and Engineering Center	b. TELEPHONE (Include Area Code) (1) Commercial (201) 724-6671	(2) AUTOVON 880-6671
ADDRESS (Include Zip Code) ATTN: SMCAR-BAC-S Picatinny Arsenal, NJ 07806-5000	IF YOU DO NOT RECEIVE A REPLY WITHIN 45 DAYS, CONTACT: Defense Quality and Standardization Office 5203 Leesburg Pike, Suite 1403, Falls Church, VA 22041-3466 Telephone (703) 756-2340 AUTOVON 289-2340	