Downloaded from http://www.everyspec.com

NOT MEASUREMENT SENSITIVE

MIL-HDBK-118
22 SEPTEMBER 1993

MILITARY HANDBOOK

DESIGN GUIDE FOR MILITARY APPLICATIONS OF HYDRAULIC FLUIDS

AMSC N/A

FSC 9150

DISTRIBUTION STATEMENT A. Approved for public release; distribution is unlimited.

Downloaded from http://www.everyspec.com

FOREWORD

1. This military handbook is approved for use by all Departments and Agencies of the Department of Defense.

2. Beneficial comments (recommendations, additions, and deletions) and any pertinent data that may be of use in improving this document should be addressed to the Commander US Army Belvoir Research, Development, and Engineering Center, ATTN: SATBE-FL, Fort Belvoir, VA 22060-5606, by using the self-addressed Standardization Document Improvement Proposal (DD Form 1426) appearing at the end of this document or by letter.

3. This handbook was developed under the auspices of the US Army Materiel Command's Engineering Design Handbook Program, which is under the direction of the US Army Industrial Engineering Activity. Research Triangle Institute (RTI) was the prime contractor for the preparation of this handbook, which was prepared under Contract No. DAAA09-86-D-0009. Oklahoma State University (OSU) was a subcontractor to RTI for the preparation of this handbook. The principal investigators at the OSU were Mr. J. G. Eleftherakis and Mr. F. D. Norvelle. The development of this handbook was guided by a technical working group (TWG) composed of individuals from the Department of Defense. Two individuals of this TWG deserve special recognition of the outstanding way in which they provided guidance to the principal investigators and reviewed the manuscripts. They are Mrs. Constance Van Brocklin of the US Army Belvoir Research, Development, and Engineering Center and Mr. C. E. Snyder of the US Air Force Wright Research and Development Center.

Downloaded from http://www.everyspec.com

CONTENTS

FOREWARD ii
LIST OF ILLUSTRATIONS xv
LIST OF TABLES xix
LIST OF ABBREVIATIONS AND ACRONYMS xxi

CHAPTER 1
INTRODUCTION

1-1 GENERAL 1-1
1-2 METHODS OF TRANSMITTING POWER 1-1
1-2.1 ELECTRICAL POWER TRANSMISSION 1-1
1-2.2 MECHANICAL POWER TRANSMISSION 1-1
1-2.3 PNEUMATIC POWER TRANSMISSION 1-1
1-2.4 HYDRAULIC POWER TRANSMISSION 1-1
1-3 PRINCIPLES OF HYDRAULICS 1-2
1-3.1 GENERATION AND USE OF FLUID POWER 1-2
1-3.1.1 Fluid Power Circuits 1-2
1-3.1.2 Symbolic Representation of Components 1-2
1-3.1.2.1 Directional Control Valves 1-2
1-3.1.2.2 Flow-Control Valves 1-3
1-3.1.2.3 Pressure Control Valves 1-3
1-3.1.2.4 Rotary Pumps and Hydraulic Motors 1-4
1-3.1.2.5 Hydraulic Cylinder (Linear Actuators) 1-4
1-3.1.3 Uses of Hydraulic Power 1-4
1-3.2 REQUIREMENTS FOR HYDRAULIC FLUIDS 1-5
1-3.2.1 System Dependency of the Hydraulic Fluid 1-5
1-3.2.1.1 Temperature 1-5
1-3.2.1.2 Viscosity 1-5
1-3.2.1.3 Compatibility With System Materials 1-5
1-3.2.1.4 Hydraulic System Accuracy, Speed of Response, and Stability 1-6
1-3.2.1.5 Fluid Stability (Temperature and Shear) 1-6
1-3.2.1.6 Lubricity 1-6
1-3.2.1.7 Pressure 1-6
1-3.2.1.8 Lacquer and Insoluble Material Formation 1-7
1-3.2.1.9 Fire Resistance and Nonflammability 1-7
1-3.2.1.10 Density 1-8
1-3.2.1.11 Volatility 1-8
1-3.2.2 Other Considerations 1-8
1-3.2.2.1 Availability 1-8
1-3.2.2.2 Cost 1-8
1-3.2.2.3 Handling 1-8
1-3.2.2.4 Storage 1-8
1.3.2.2.5 Disposal 1-8
1-3.2.2.6 Contamination 1-9
REFERENCES 1-9
BIBLIOGRAPHY 1-10

CHAPTER 2
POWER TRANSMISSION EQUIPMENT

2-0 LIST OF SYMBOLS 2-1
2-1 INTRODUCTION 2-1
2-2 PUMPS 2-2

Downloaded from http://www.everyspec.com

2-2.1 GEAR PUMPS 2-2
2-2.1.1 External Gear Pumps 2-2
2-2.1.1.1 Spur Gear Pumps 2-2
2-2.1.1.2 Helical Gear Pumps 2-3
2-2.1.1.3 Herringbone Gear Pumps 2-4
2-2.1.2 Internal Gear Pumps 2-4
2-2.1.2.1 Crescent Seal Pumps 2-4
2-2.1.2.2 Gerotor Pumps 2-4
2-2.2 VANE PUMPS 2-5
2-2.2.1 Unbalanced Vane Pumps 2-5
2-2.2.2 Balanced Vane Pumps 2-6
2-2.3 PISTON PUMPS 2-6
2-2.3.1 Axial Piston Pumps 2-6
2-2.3.2 Radial Piston Pumps 2-9
2-2.3.3 Rotating Piston Pumps 2-10
2-2.4 SCREW PUMPS 2-11
2-3 CONNECTION BETWEEN PUMP AND DRIVE MOTOR 2-11
2-4 ACTUATORS 2-12
2-4.1 LINEAR ACTUATORS 2-12
2-4.1.1 Classification of Linear Actuators 2-12
2-4.1.1.1 Rotating 2-12
2-4.1.1.2 Nonrotating 2-13
2-4.1.1.3 Piston or Plunger 2-13
2-4.1.1.4 Rod Classification 2-13
2-4.1.1.5 Cylinder Action 2-13
2-4.1.1.6 Single, Tandem, and Dual Actuators 2-14
2-4.1.1.7 Cushioned or Noncushioned Type 2-14
2-4.1.2 Mounting Configuration 2-14
2-4.1.3 Kinematics of Linear Actuators 2-16
2-4.2 ROTARY ACTUATORS OR MOTORS 2-16
2-4.2.1 Gear Motors 2-16
2-4.2.1.1 Gear-on-Gear Motors 2-17
2-4.2.1.2 Crescent Seal Motors 2-17
2-4.2.1.3 Gerotor-Type Motors 2-18
2-4.2.2 Vane Motors 2-18
2-4.2.3 Limited-Rotation Motors 2-18
2-4.2.3.1 Vane Type 2-18
2-4.2.3.2 Piston Type 2-19
2-4.2.4 Piston Motors 2-19
2-4.2.4.1 Axial Piston Type 2-20
2-4.2.4.2 Radial Piston Type 2-20
2-4.2.4.3 Rotary Piston Type 2-20
2-4.2.5 Low-Speed, High-Torque Motors 2-20
2-4.3 HYDROSTATIC TRANSMISSIONS 2-20
2-4.3.1 Fixed-Displacement Pump and Motor 2-20
2-4.3.2 Fixed-Displacement Pump and Variable-Displacement Motor 2-21
2-4.3.3 Variable-Displacement Pump and Fixed-Displacement Motor 2-21
2-4.3.4 Variable-Displacement Pump and Motor 2-21
2-4.3.5 Summary 2-21
2-5 INTENSIFIERS 2-21
2-6 RESERVOIRS 2-22
2-6.1 FUNCTION 2-22
2-6.2 CAPACITY 2-22
2-6.3 TYPES 2-22
2-7 FILTERS 2-22

Downloaded from http://www.everyspec.com

2-7.1 CLASSIFICATION OF FILTERS 2-23
2-7.2 FILTERING METHODS 2-23
2-7.2.1 Mechanical Filters 2-23
2-7.2.2 Adsorbent Filters 2-24
2-7.2.3 Absorbent Filters 2-25
2-7.3 HYDRAULIC FILTER/FLUID COMPATIBILITY 2-25
2-7.4 FILTER PRESSURE DROP 2-25
2-7.5 REPLACEMENT OR CLEANING INTERVALS 2-25
2-8 ACCUMULATORS 2-26
2-8.1 INTRODUCTION 2-26
2-8.2 ACCUMULATOR LOADING 2-27
2-8.2.1 Weight-Loaded Accumulators 2-27
2-8.2.2 Spring-Loaded Accumulators 2-28
2-8.2.3 Pneumatic-Loaded Accumulators 2-28
2-8.2.3.1 Nonseparated Type 2-28
2-8.2.3.2 Separated Type 2-28
2-8.2.4 Accumulator Sizing 2-30
2-9 VALVES 2-30
2-9.1 VALVE TYPES 2-30
2-9.1.1 Pressure Control Valves 2-30
2-9.1.1.1 Pressure Relief Valves 2-30
2-9.1.1.2 Unloading Valves 2-31
2-9.1.1.3 Sequence Valves 2-32
2-9.1.1.4 Counterbalance Valves 2-32
2-9.1.1.5 Brake Valves 2-33
2-9.1.1.6 Pressure-Reducing Valves 2-33
2-9.1.1.7 Hydraulic Fuses 2-33
2-9.1.1.8 Rupture Disks 2-33
2-9.1.2 Directional Control Valves 2-33
2-9.1.2.1 Check Valves 2-33
2-9.1.2.2 Shuttle Valves 2-34
2-9.1.2.3 Two-Way Valves 2-34
2-9.1.2.4 Three-Way Valves 2-34
2-9.1.2.5 Four-Way Valves 2-34
2-9.1.2.6 Deceleration Valves 2-36
2-9.1.3 Flow-Control Valves 2-37
2-9.1.3.1 Simple Orifice 2-37
2-9.1.3.2 Globe and Needle Valves 2-37
2-9.1.3.3 Pressure-Compensated Flow-Control Valves 2-38
2-9.1.3.4 Temperature-Compensated Flow-Control Valves 2-38
2-9.1.3.5 Positive-Displacement Metering Valves 2-38
2-9.1.3.6 Flow Divider Valves 2-39
2-9.2 VALVE ACTUATION 2-39
2-9.2.1 Manual Actuation 2-40
2-9.2.2 Spring Actuation 2-40
2-9.2.3 Cam Actuation 2-40
2-9.2.4 Solenoid Actuation 2-40
2-9.2.5 Proportional Solenoid Actuation 2-42
2-9.2.6 Servomechanism Actuation 2-43
2-9.2.7 Pilot Fluid Actuation 2-45
2-9.3 VALVE MOUNTING 2-45
2-9.3.1 In-Line Mounts 2-45
2-9.3.2 Subplate Mounts 2-45
2-9.3.3 Cartridge Blocks 2-46
2-10 HEAT EXCHANGERS 2-46

Downloaded from http://www.everyspec.com

2-10.1 MODES OF HEAT TRANSFER 2-47
2-10.1.1 Conduction 2-47
2-10.1.2 Convection 2-47
2-10.1.3 Radiation 2-48
2-10.1.4 Overall Heat Transfer Coefficient 2-48
2-10.2 TYPES OF COOLING SYSTEMS 2-49
2-10.2.1 Air-Cooled Heat Exchangers 2-49
2-10.2.2 Water-Cooled Heat Exchangers 2-49
2-10.2.3 The Reservoir as a Heat Exchanger 2-50
2-10.3 FLUID HEATERS 2-50
2-11 HYDRAULIC FLUID CONDUCTORS 2-51
2-11.1 HOSE, TUBING, AND PIPE 2-51
2-11.2 HOSE, TUBING, AND PIPE FITTINGS 2-51
2-11.3 PRESSURE LOSSES IN PIPELINES 2-53
2-12 SHOCK ABSORBERS 2-55
2-12.1 HYDRAULIC SHOCK ABSORBERS 2-55
2-12.2 HYDROPNEUMATIC SHOCK ABSORBERS 2-56
2-13 LIQUID SPRINGS 2-56
REFERENCES 2-57
BIBLIOGRAPHY 2-57

CHAPTER 3
FLUID PROPERTIES, SIGNIFICANCE, AND TEST METHODS

3-0 LIST OF SYMBOLS 3-1
3-1 INTRODUCTION 3-2
3-2 PHYSICAL PROPERTIES 3-2
3-2.1 VISCOSITY 3-2
3-2.1.1 Significance of Viscosity 3-2
3-2.1.2 Absolute Viscosity 3-2
3-2.1.3 Kinematic Viscosity 3-3
3-2.1.4 Other Viscosity Scales 3-3
3-2.1.5 Viscosity Unit Conversions 3-3
3-2.1.6 Newtonian Fluids 3-4
3-2.1.7 Non-Newtonian Materials 3-4
3-2.1.8 Determination of Viscosity of Non-Newtonian Materials 3-5
3-2.1.9 Measurement of Viscosity 3-5
3-2.1.10 Test Methods for Viscosity 3-6
3-2.1.11 Laminar, Mixed, and Turbulent Flow 3-7
3-2.2 VISCOSITY-TEMPERATURE PROPERTIES 3-8
3-2.2.1 ASTM Viscosity-Temperature Charts 3-8
3-2.2.2 ASTM Slope 3-8
3-2.2.3 Viscosity-Temperature Coefficient 3-10
3-2.2.4 Viscosity Index 3-10
3-2.2.5 Test Methods for Viscosity-Temperature Properties 3-11
3-2.3 VISCOSITY OF BLENDS OF TWO LIQUIDS 3-11
3-2.4 VISCOSITY-PRESSURE PROPERTIES 3-12
3-2.5 VISCOSITY-SHEAR PROPERTIES 3-13
3-2.5.1 Temporary Viscosity Loss Due to Shear 3-13
3-2.5.2 Permanent Viscosity Loss Due to Shear 3-14
3-2.5.3 Test Methods for Viscosity-Shear Characteristics 3-14
3-2.6 LOW-TEMPERATURE PROPERTIES 3-15
3-2.6.1 Cloud Point 3-15
3-2.6.2 Pour Point 3-15
3-2.6.3 Freezing Point 3-15

Downloaded from http://www.everyspec.com

3-2.6.4 Test Methods for Low-Temperature Properties 3-16
3-2.6.5 Significance of Freezing and Pour Points 3-17
3-2.7 FLAMMABILITY CHARACTERISTICS 3-17
3-2.7.1 Flash and Fire Points 3-17
3-2.7.1.1 Test Methods for Flash and Fire Points 3-17
3-2.7.1.2 Significance of Flash and Fire Points 3-20
3-2.7.2 Autoignition Temperature 3-20
3-2.7.2.1 Test Method for the AIT 3-20
3-2.7.2.2 Significance 3-21
3-2.7.3 Effects of Evaporation on Flammability (Pipe Cleaner Test) 3-21
3-2.7.4 Flammability Tests Under Simulated Service Conditions 3-23
3-2.7.5 Fire-Resistant Liquids 3-28
3-2.7.6 Nonflammable Hydraulic Fluids 3-28
3-2.8 VOLATILITY 3-29
3-2.8.1 Vapor Pressure 3-29
3-2.8.2 Boiling Point 3-30
3-2.8.3 Evaporation 3-30
3-2.9 DENSITY, SPECIFIC GRAVITY, AND THERMAL EXPANSION 3-31
3-2.9.1 Density 3-31
3-2.9.2 Specific Gravity 3-32
3-2.9.3 API Gravity 3-32
3-2.9.4 Coefficient of Thermal Expansion 3-32
3-2.9.5 Test Methods for API Gravity, Density, and Specific Gravity 3-32
3-2.10 HEAT TRANSFER CHARACTERISTICS 3-34
3-2.10.1 Specific Heat 3-34
3-2.10.2 Thermal Conductivity 3-35
3-2.11 COMPRESSIBILITY AND BULK MODULUS 3-35
3-2.11.1 Compressibility 3-35
3-2.11.2 Bulk Modulus 3-36
3-2.11.2.1 Secant Bulk Modulus 3-36
3-2.11.2.2 Tangent Bulk Modulus 3-37
3-2.11.3 Sonic Bulk Modulus 3-37
3-2.11.4 Measurement of Bulk Modulus 3-38
3-2.11.4.1 Secant and Tangent Bulk Moduli 3-38
3-2.11.4.2 Sonic Bulk Modulus 3-38
3-2.11.4.3 Estimation of Bulk Modulus (Penn State Method) 3-39
3-2.11.4.3.1 Method 3-39
3-2.11.4.3.2 Example 3-39
3-2.11.4.4 Estimation of Bulk Modulus (Other Methods) 3-40
3-2.12 EMULSIONS AND FOAMING IN HYDRAULIC FLUIDS 3-40
3-2.12.1 Emulsion Characteristics 3-40
3-2.12.2 Foaming Characteristics 3-41
3-2.12.3 Tests for Emulsion and Foaming Characteristics 3-41
3-2.13 GAS SOLUBILITY 3-42
3-2.14 LOW-TEMPERATURE STABILITY 3-43
3-2.14.1 General 3-43
3-2.14.2 Test Methods for Low-Temperature Stability 3-44
3-2.15 SEDIMENTATION 3-45
3-3 LUBRICATION PROPERTIES 3-45
3-3.1 GENERAL 3-45
3-3.2 HYDRODYNAMIC LUBRICATION 3-46
3-3.3 TRANSITION FROM HYDRODYNAMIC TO BOUNDARY LUBRICATION 3-46
3-3.4 BOUNDARY LUBRICATION 3-47
3-3.5 EXTREME-PRESSURE LUBRICATION 3-47
3-3.6 DEFINITION OF TERMS USED IN DESCRIBING LUBRICATING CHARACTERISTICS 3-47

Downloaded from http://www.everyspec.com

3-3.6.1 Film Strength 3-47
3-3.6.2 Oiliness 3-48
3-3.6.3 Lubricity 3-48
3-3.7 PREVENTION OF WEAR 3-48
3-3.7.1 Mechanical Factors 3-48
3-3.7.2 Lubrication Factors 3-48
3-3.8 TEST METHODS FOR LUBRICATING PROPERTIES 3-48
3-3.8.1 Bench-Type Friction and Wear Testers 3-49
3-3.8.1.1 Timken Tester 3-49
3-3.8.1.2 Almen Tester 3-49
3-3.8.1.3 Falex Tester 3-49
3-3.8.1.4 Four-Ball Tester 3-50
3-3.8.1.5 Cameron-Plint High-Frequency Friction Test 3-50
3-3.8.2 Evaluation of Lubricating Properties by Pump Tests 3-51
3-3.8.2.1 Simulative Recirculating Pump Test 3-51
3-3.8.2.2 Pump Loop Wear Test 3-52
3-3.8.2.3 Vane Pump Test 3-52
3-3.8.3 Other Lubricating Characteristics Tests 3-52
3-3.8.3.1 Load-Carrying Ability of Lubricating Oils at 204°C (400°F) 3-52
3-3.8.3.2 Load-Carrying Capacity of Petroleum Oil and Synthetic Fluid Gear Lubricants 3-52
3-3.8.3.3 Gear Fatigue Characteristics of Aircraft Gas Turbine Lubricants at 204°C (400°F) 3-52
3-3.8.3.4 Load-Carrying Ability of Lubricating Oils (Ryder Gear Machine) 3-52
3-4 CHEMICAL PROPERTIES 3-53
3-4.1 CHEMICAL STABILITY 3-53
3-4.2 OXIDATION STABILITY 3-53
3-4.3 THERMAL STABILITY 3-55
3-4.4 HYDROLYTIC STABILITY 3-56
3-4.5 RADIATION RESISTANCE 3-56
3-4.6 CHEMICAL STABILITY TESTS 3-57
3-4.6.1 Indicators of Liquid Stability 3-58
3-4.6.1.1 Color 3-58
3-4.6.1.2 Neutralization Number 3-58
3-4.6.1.3 Carbon Residue 3-59
3-4.6.2 Oxidation Stability Tests 3-60
3-4.6.2.1 Oxidation-Corrosion Test 3-60
3-4.6.2.2 Oxidation Characteristics of Inhibited Mineral Oils 3-60
3-4.6.2.3 Evaporation Tests 3-60
3-4.6.2.4 Thin Film Oxidation Tests 3-60
3-4.6.2.5 Dornte Oxidation Test 3-61
3-4.6.3 Thermal Stability Tests 3-61
3-4.6.3.1 Penn State Bomb Test 3-61
3-4.6.3.2 High-Temperature Test 3-61
3-4.6.3.3 Sustained High-Temperature Stability Tests 3-61
3-4.6.3.4 Low-Temperature Stability Test 3-61
3-4.6.4 Hydrolytic Stability Tests 3-61
3-4.6.4.1 Beverage Bottle Test 3-61
3-4.6.4.2 Other Hydrolytic Stability Tests 3-62
3-4.6.5 Radiation Resistance Tests 3-62
3-5 CORROSIVENESS 3-62
3-5.1 CHEMICAL CORROSION 3-62
3-5.2 ELECTROCHEMICAL CORROSION 3-63
3-5.3 CORROSIVENESS TESTS 3-63
3-5.3.1 Metal-Liquid Corrosiveness Tests 3-63
3-5.3.2 Humidity-Type Corrosiveness Tests 3-63
3-5.3.3 Gearbox and Engine Corrosiveness Tests 3-64

Downloaded from http://www.everyspec.com

REFERENCES 3-66
BIBLIOGRAPHY 3-72

CHAPTER 4
TYPES OF HYDRAULIC FLUIDS

4-1 INTRODUCTION 4-1
4-2 CLASSIFICATION OF HYDRAULIC FLUIDS 4-1
4-2.1 CLASSIFICATION BY VISCOSITY 4-1
4-2.2 CLASSIFICATION BY CHEMICAL PROPERTIES 4-1
4-2.3 CLASSIFICATION BY OPERATING TEMPERATURES 4-1
4-2.4 CLASSIFICATION BY FLAMMABILITY 4-2
4-2.5 CLASSIFICATION INTO PETROLEUM OR NONPETROLEUM HYDRAULIC FLUIDS 4-2
4-2.6 CLASSIFICATION USED IN THIS HANDBOOK 4-7
4-3 PETROLEUM-BASE HYDRAULIC FLUIDS 4-7
4-4 NONPETROLEUM-BASE HYDRAULIC FLUIDS 4-7
4-4.1 PHOSPHATE ESTERS 4-7
4-4.2 SILICATE ESTERS 4-9
4-4.3 ORGANIC ACID ESTERS 4-9
4-4.4 POLYSILOXANES 4-9
4-4.5 GLYCOLS 4-10
4-4.6 POLYOXYALKYLENE GLYCOLS 4-10
4-4.7 WATER GLYCOLS 4-10
4-4.8 EMULSIONS 4-10
4-5 NONSPECIFICATION AND POTENTIAL HYDRAULIC FLUIDS 4-11
4-5.1 PETROLEUM-BASE FLUIDS 4-11
4-5.2 NONPETROLEUM-BASE HYDRAULIC FLUIDS 4-11
4-5.2.1 Phosphate Esters 4-11
4-5.2.2 Polysiloxanes (Silicones) 4-12
4-5.2.3 Silahydrocarbons 4-12
4-5.2.4 Poly (chlorophenyl methyl) siloxane 4-12
4-5.2.5 Halogenated Hydrocarbons 4-13
4-5.2.5.1 Chlorotrifluoroethylene (CTFE) 4-13
4-5.2.5.2 Perfluorinated Polymers 4-13
4-5.2.6 Polyalphaolefins 4-13
4-5.2.7 Polyphenyl Ethers 4-13
4-5.2.8 Liquid Metals 4-14
4-6 HYDRAULIC FLUID SPECIFICATIONS 4-14
4-6.1 INTRODUCTION 4-14
4-6.2 MIL-F-17111B(OS): POWER TRANSMISSION FLUID 4-14
4-6.2.1 Descriptive Summary 4-14
4-6.2.2 Tabular Data 4-14
4-6.3 MIL-H-17672D: HYDRAULIC FLUID, PETROLEUM, INHIBITED 4-14
4-6.3.1 Descriptive Summary 4-14
4-6.3.2 Tabular Data 4-15
4-6.4 MIL-H-27601A (USAF): HYDRAULIC FLUID, PETROLEUM-BASE, HIGH-TEMPERATURE, FLIGHT VEHICLE 4-15
4-6.4.1 Descriptive Summary 4-15
4-6.4.2 Tabular Data 4-15
4-6.5 MIL-H-46001D: HYDRAULIC FLUIDS, PETROLEUM-BASE, FOR MACHINE TOOLS 4-15
4-6.5.1 Descriptive Summary 4-15
4-6.5.2 Tabular Data 4-15
4-6.6 MIL-H-5606F: HYDRAULIC FLUID, PETROLEUM-BASE; AIRCRAFT, MISSILE, AND ORDNANCE 4-15
4-6.6.1 Descriptive Summary 4-15

Downloaded from http://www.everyspec.com

4-6.6.2 Tabular Data....4-16
4-6.7 MIL-H-6083E: HYDRAULIC FLUID, PETROLEUM-BASE, FOR PRESERVATION AND OPERATION....4-16
4-6.7.1 Descriptive Summary....4-16
4-6.7.2 Tabular Data....4-16
4-6.8 MIL-H-81019D: HYDRAULIC FLUID, PETROLEUM-BASE, ULTRA-LOW-TEMPERATURE, METRIC....4-16
4-6.8.1 Descriptive Summary....4-16
4-6.8.2 Tabular Data....4-16
4-6.9 MIL-L-17331H(SH): LUBRICATING OIL, STEAM TURBINE AND GEAR, MODERATE SERVICE....4-17
4-6.9.1 Descriptive Summary....4-17
4-6.9.2 Tabular Data....4-17
4-6.10 MIL-L-2104F: LUBRICATING OIL, INTERNAL COMBUSTION ENGINE, TACTICAL SERVICE....4-17
4-6.10.1 Descriptive Summary....4-17
4-6.10.2 Tabular Data....4-17
4-6.11 MIL-L-46167B: LUBRICATING OIL, INTERNAL COMBUSTION ENGINE, ARCTIC....4-18
4-6.11.1 Descriptive Summary....4-18
4-6.11.2 Tabular Data....4-18
4-6.12 MIL-H-46170B: HYDRAULIC FLUID, RUST-INHIBITED, FIRE-RESISTANT SYNTHETIC-HYDROCARBON-BASE....4-18
4-6.12.1 Descriptive Summary....4-18
4-6.12.2 Tabular Data....4-18
4-6.13 MIL-H-83282C: HYDRAULIC FLUID, FIRE-RESISTANT, SYNTHETIC HYDROCARBON-BASE, AIRCRAFT, METRIC....4-18
4-6.13.1 Descriptive Summary....4-18
4-6.13.2 Tabular Data....4-19
4-6.14 MIL-H-87257: HYDRAULIC FLUID, FIRE-RESISTANT, LOW-TEMPERATURE, SYNTHETIC HYDROCARBON-BASE, AIRCRAFT AND MISSILE....4-19
4-6.14.1 Descriptive Summary....4-19
4-6.14.2 Tabular Data....4-19
4-6.15 MIL-H-22072C(AS): HYDRAULIC FLUID, CATAPULT....4-19
4-6.15.1 Descriptive Summary....4-19
4-6.15.2 Tabular Data....4-19
4-6.16 MIL-H-5559A(AS): HYDRAULIC FLUID, ARRESTING GEAR....4-19
4-6.16.1 Descriptive Summary....4-19
4-6.16.2 Tabular Data....4-19
4-6.17 SAE J 1703: MOTOR VEHICLE BRAKE FLUID....4-20
4-6.17.1 Descriptive Summary....4-20
4-6.17.2 Tabular Data....4-20
4-6.18 MIL-B-46176A: BRAKE FLUID, SILICONE, AUTOMOTIVE, ALL-WEATHER, OPERATIONAL AND PRESERVATIVE, METRIC....4-20
4-6.18.1 Descriptive Summary....4-20
4-6.18.2 Tabular Data....4-20
4-6.19 MIL-L-87100 (USAF): LUBRICATING OIL, AIRCRAFT TURBINE ENGINE, POLYPHENYL-ETHER-BASE....4-20
4-6.19.1 Descriptive Summary....4-20
4-6.19.2 Tabular Data....4-20
4-6.20 MIL-S-81087C: SILICONE FLUID, CHLORINATED PHENYL METHYL POLYSILOXANE....4-20
4-6.20.1 Descriptive Summary....4-20
4-6.20.2 Tabular Data....4-21
4-6.21 VV-D-1078B: DAMPING FLUID, SILICONE-BASE (DIMETHYL POLYSILOXANE)....4-21
4-6.21.1 Descriptive Summary....4-21
4-6.21.2 Tabular Data....4-21
4-6.22 MIL-H-19457D(SH): HYDRAULIC FLUID, FIRE-RESISTANT, NONNEUROTOXIC....4-21
4-6.22.1 Descriptive Summary....4-21

Downloaded from http://www.everyspec.com

4-6.22.2 Tabular Data 4-22
4-6.23 MIL-H-53119(ME): HYDRAULIC FLUID, NONFLAMMABLE, CHLOROTRIFLUOROETHYLENE-BASE 4-22
4-6.23.1 Descriptive Summary 4-22
4-6.23.2 Tabular Data 4-22
4-7 VISCOSITY-TEMPERATURE GRAPHS 4-22
REFERENCES 4-72
BIBLIOGRAPHY 4-72

CHAPTER 5
ADDITIVES

5-1 INTRODUCTION 5-1
5-2 OXIDATION INHIBITORS 5-1
5-2.1 MODE OF ACTION OF ANTIOXIDANTS 5-1
5-2.2 CLASSES OF ANTIOXIDANTS AND SYNERGISM 5-1
5-2.2.1 Metal Deactivators 5-2
5-2.2.2 Free Radical Acceptors 5-2
5-2.2.3 Hydroperoxide Destroyers 5-2
5-2.2.4 Synergism 5-2
5-2.3 EXAMPLES OF THE USE OF INHIBITORS IN VARIOUS HYDRAULIC FLUIDS 5-2
5-2.3.1 Highly Refined Mineral Oils 5-2
5-2.3.2 Silicon-Containing Fluids 5-2
5-2.3.3 Ethers 5-3
5-2.3.4 Polyalphaolefin (PAO) 5-3
5-3 CORROSION INHIBITORS 5-3
5-3.1 DEFINITIONS 5-3
5-3.2 MODE OF ACTION OF RUST INHIBITORS 5-3
5-3.3 LIMITATIONS IN THE USE OF RUST INHIBITORS 5-4
5-3.4 EXAMPLES OF RUST AND CORROSION INHIBITORS 5-4
5-3.5 VOLATILE CORROSION INHIBITORS 5-5
5-4 VISCOSITY INDEX IMPROVERS 5-5
5-4.1 MODE OF ACTION 5-5
5-4.2 LIMITATIONS 5-5
5-4.3 EXAMPLES OF EFFECTIVE POLYMERS 5-5
5-5 FOAM INHIBITORS, EMULSIFIERS, AND DEMULSIFIERS 5-6
5-5.1 CHARACTERISTICS OF FOAMS AND THE MODE OF FOAM INHIBITION 5-6
5-5.2 EXAMPLES OF FOAM INHIBITORS 5-6
5-5.3 EMULSIFIERS AND DEMULSIFIERS 5-7
5-6 LUBRICITY 5-7
5-6.1 HYDRODYNAMIC VS BOUNDARY LUBRICATION 5-7
5-6.2 OILINESS, ANTIWEAR, AND EXTREME-PRESSURE ADDITIVES 5-7
5-6.2.1 Oiliness Additives 5-7
5-6.2.2 Antiwear Additives 5-7
5-6.2.3 Extreme-Pressure Additives 5-8
5-6.3 FRICTION MODIFICATION ADDITIVES 5-8
5-6.4 CLASSES OF LUBRICITY ADDITIVES 5-8
5-6.4.1 Additives for Mineral Oils and Esters 5-8
5-6.4.2 Additives for Silicon-Containing Fluids 5-8
5-6.4.3 Additives for Aryl Ether Fluids 5-9
5-7 POUR POINT DEPRESSANTS 5-9
5-8 ELASTOMER SWELL ADDITIVES 5-9
5-9 HYDROLYSIS INHIBITORS 5-9
5-10 CAVITATION INHIBITORS 5-10
5-11 BIOCIDES 5-10

Downloaded from http://www.everyspec.com

5-12 SUMMARY OF ADDITIVE EFFECTS ON FLUID PROPERTIES 5-10
REFERENCES 5-11
BIBLIOGRAPHY 5-14

CHAPTER 6
GUIDE TO SELECTION OF A HYDRAULIC FLUID

6-0 LIST OF SYMBOLS 6-1
6-1 INTRODUCTION 6-1
6-2 COMPATIBILITY 6-1
6-2.1 HYDRAULIC FLUID COMPATIBILITY WITH METALS 6-1
6-2.1.1 Metal Fatigue and Stress Corrosion 6-2
6-2.1.2 Cavitation 6-2
6-2.2 ELASTOMERS 6-3
6-2.2.1 Basic Elastomer Materials 6-4
6-2.2.2 Effect of Radiation on Elastomers, Plastics, and Resins 6-10
6-2.2.3 Test Methods for Elastomer-Liquid Compatibility 6-10
6-2.3 COMPATIBILITY WITH COATINGS 6-12
6-2.3.1 Compatibility With Paints 6-12
6-2.3.2 Compatibility With Other Coatings 6-12
6-2.4 COMPATIBILITY WITH OTHER LUBRICANTS 6-13
6-2.5 COMPATIBILITY WITH ADDITIVES 6-13
6-3 FLUID SELECTION CONSIDERATIONS 6-13
6-3.1 TYPE OF APPLICATION 6-14
6-3.1.1 Power Transmission—Fluid Coupling 6-14
6-3.1.2 Actuation—Linear and Rotary 6-14
6-3.1.3 Propulsion 6-14
6-3.1.4 Steering 6-15
6-3.1.5 Braking 6-15
6-3.1.6 Control and Control Systems 6-15
6-3.1.7 Shock Absorbers 6-15
6-3.1.8 Catapults 6-15
6-3.1.9 Arresting Gear 6-16
6-3.1.10 Gun Drive Mechanisms 6-16
6-3.2 IMPORTANT PROPERTIES OF FLUID BASED ON APPLICATION 6-16
6-3.3 COMPATIBILITY WITH SYSTEM COMPONENTS 6-16
6-3.4 TEMPERATURE RANGES 6-19
6-3.4.1 Environmental 6-19
6-3.4.2 Hydraulic System 6-19
6-3.5 HYDRAULIC FLUID SUBSTITUTION ALTERNATIVES 6-20
6-3.5.1 Application Options 6-20
6-3.5.2 Battlefield Damage and Repair Options 6-20
6-4 SELECTION CHECKLIST 6-20
6-5 SELECTION EXAMPLE 6-21
REFERENCES 6-26
BIBLIOGRAPHY 6-26

CHAPTER 7
STORAGE AND HANDLING, CONTAMINATION, AND CONTAMINATION CONTROL

7-1 CONTAINERS 7-1
7-1.1 INTRODUCTION 7-1
7-1.2 CONTAINER MATERIALS 7-1
7-1.3 CONTAINER SIZES, STORAGE, AND MARKING 7-1

Downloaded from http://www.everyspec.com

7-2 CONTAMINANTS 7-2
7-2.1 SOURCES OF CONTAMINATION 7-3
7-2.1.1 Ingested, Injected, and Generated Contaminants 7-3
7-2.1.2 Moisture Contamination During Storage 7-4
7-2.1.3 Contamination Accompanying Additives 7-5
7-2.2 TYPES OF CONTAMINANTS 7-5
7-2.2.1 Water as a Contaminant 7-5
7-2.2.2 Solid Particle Contaminant 7-5
7-2.2.3 Liquid Contaminants Other Than Water 7-6
7-2.2.4 Microbiological Contaminants 7-6
7-2.3 EFFECTS OF CONTAMINATION 7-6
7-2.3.1 Effects of Contamination on the Hydraulic Fluid 7-6
7-2.3.2 Effects of Contamination on the Hydraulic System 7-6
7-2.4 CONTAMINATION ANALYSIS 7-9
7-2.4.1 Solid Particle Contamination Measurement by Counting 7-9
7-2.4.1.1 Microscopic Particle Counting 7-9
7-2.4.1.1.1 Description 7-9
7-2.4.1.1.2 General Procedure 7-9
7-2.4.1.2 Automatic Particle Counting 7-9
7-2.4.1.2.1 Description 7-9
7-2.4.1.2.2 Procedure 7-9
7-2.4.1.2.3 Results 7-9
7-2.4.1.3 Semiquantitative Particle Analysis 7-10
7-2.4.2 Solid Particle Contamination Measurement by Weighing 7-10
7-2.4.2.1 Description 7-10
7-2.4.2.2 General Procedure 7-10
7-2.4.2.3 Results 7-10
7-2.4.3 Solid Particle Contamination Measurement by Combined Counting and Weighing Methods 7-10
7-2.4.4 Liquid Contaminant Measurement 7-11
7-2.4.5 Chemical Analysis 7-11
7-2.4.6 Spectrometric (Spectrographic) Analysis 7-13
7-3 CONTAMINANT EXCLUSION 7-14
7-4 CONTAMINANT REMOVAL (FILTRATION) 7-14
7-5 CHEMICAL AND BIOLOGICAL CONTAMINANTS 7-15
7-5.1 SOURCE OF CONTAMINATION 7-15
7-5.1.1 Chemical 7-16
7-5.1.2 Biological 7-16
7-5.2 TYPES OF CONTAMINATION 7-16
7-5.2.1 Chemical Agents 7-16
7-5.2.2 Biological Agents 7-17
7-5.3 EFFECT OF CONTAMINATION 7-17
7-5.4 METHODS OF DETERMINING CONTAMINANT 7-17
7-5.5 DECONTAMINATION 7-17
7-5.5.1 Methods 7-17
7-5.5.2 Container Design to Enhance Decontamination 7-19
7-5.5.3 Effects of Decontaminants 7-19
7-5.5.3.1 On Containers 7-19
7-5.5.3.2 On Hydraulic Fluids 7-20
7-6 PRECAUTIONS 7-20
7-6.1 HEALTH HAZARD 7-20
7-6.1.1 Precautions Against Poisoning 7-20
7-6.1.2 Precautions Against Dangerous Vapors and Sprays 7-20
7-6.1.3 Precautions Against Carcinogens and Neurotoxins 7-20
7-6.2 DANGER OF EXPLOSION AND FIRE 7-21
7-6.3 CONTAINER DISPOSAL 7-21

Downloaded from http://www.everyspec.com

7-6.4 OTHER PRECAUTIONS 7-21
REFERENCES 7-22
BIBLIOGRAPHY 7-24

APPENDIX A. CROSS REFERENCE OF FLUID POWER STANDARDS A-1
APPENDIX B. ACCUMULATOR SIZING WORKSHEETS B-1
GLOSSARY G-1
INDEX I-1
SUBJECT TERM (KEY WORD) LISTING ST-1

Downloaded from http://www.everyspec.com

LIST OF ILLUSTRATIONS

Figure No.	Title	Page
1-1	Three-Position, Four-Way Directional Control Valve	1-3
1-2	Graphic Symbols for Flow-Control Valves	1-3
1-3	Pressure Control Valve Graphic Symbols	1-3
1-4	Graphic Symbols for Hydraulic Pump and Motor	1-4
1-5	Graphic Symbol for a Hydraulic Oscillatory Device	1-4
1-6	Graphic Symbols for Hydraulic Cylinders	1-4
2-1	Typical Hydraulic Motor Circuit	2-2
2-2	Spur Gear Pump	2-3
2-3	Typical Gear Pump Performance Curves	2-3
2-4	Helical Gear Pump	2-4
2-5	Herringbone Gear Pump	2-4
2-6	Crescent Seal Gear Pump	2-4
2-7	Gerotor Pump	2-5
2-8	Unbalanced Vane Pump	2-5
2-9	Variable-Displacement Vane Pump	2-5
2-10	Balanced Vane Pump	2-6
2-11	Typical Balanced Vane Pump Performance Curves	2-6
2-12	Axial Piston Pump	2-7
2-13	Bent Axis Piston Pump	2-8
2-14	Reversible, Variable-Displacement, Bent Axis Piston Pump	2-9
2-15	Pressure-Compensated Pump Profile	2-9
2-16	Radial Piston Check Valve Pump	2-10
2-17	Radial Piston Pump	2-10
2-18	Rotating Piston Pump	2-10
2-19	Screw Pumps	2-11
2-20	Flexible Couplings	2-12
2-21	Standard SAE Flange Mount Configuration for Hydraulic Pumps	2-12
2-22	Rotating Linear Actuator	2-12
2-23	Hydraulic Piston Actuator	2-13
2-24	Hydraulic Ram	2-13
2-25	Telescoping Cylinder	2-13
2-26	Double-Acting Cylinder Operation	2-14
2-27	Tandem Linear Actuator	2-14
2-28	Dual Actuator	2-14
2-29	Cushioned Cylinder	2-14
2-30	Cylinder Mounting Options	2-15
2-31	Applications of Linear Actuators	2-16
2-32	Typical Performance Curves for Gear Motors	2-17
2-33	Typical Crescent Seal Motor Performance Curves	2-17
2-34	Typical Gerotor Motor Performance Curves	2-18
2-35	Typical Balanced Vane Motor Performance Curves	2-19
2-36	Typical Single-Vane, Limited-Rotation Motor	2-19
2-37	Double-Vane, Limited-Rotation Motor	2-19
2-38	Rack and Pinion Rotary Actuator	2-20
2-39	High-Torque Rack and Pinion Rotary Actuator	2-20
2-40	Hydrostatic Transmission—Fixed-Displacement Pump and Motor	2-21
2-41	Hydrostatic Transmission—Fixed-Displacement Pump and Variable-Displacement Motor	2-21
2-42	Hydrostatic Transmission—Variable-Displacement Pump and Fixed-Displacement Motor	2-21
2-43	Hydrostatic Transmission—Variable-Displacement Pump and Motor	2-21
2-44	Pressure Intensifier	2-21
2-45	Filtration Mechanisms	2-23

Downloaded from http://www.everyspec.com

2-46 Filter Configurations 2-24
2-47 Filter Clogging Indicators 2-26
2-48 Accumulator Circuit for Developing System Flow 2-27
2-49 Accumulator Circuit for Maintaining System Pressure 2-27
2-50 Accumulator Circuit for Absorbing Shock 2-27
2-51 Accumulator Safety Circuit Options 2-28
2-52 Weight-Loaded Accumulator 2-28
2-53 Spring-Loaded Accumulator 2-28
2-54 Nonseparated, Gas-Charged Accumulator 2-29
2-55 Diaphragm-Type Accumulator 2-29
2-56 Bladder-Type Accumulator 2-29
2-57 Piston-Type Accumulator 2-29
2-58 Direct-Acting Relief Valve 2-30
2-59 Pilot-Operated Relief Valve Operation 2-31
2-60 Venting a Pilot-Operated Relief Valve 2-31
2-61 Unloading Valve 2-32
2-62 Sequence Valve 2-32
2-63 Sequence Circuit 2-32
2-64 Remotely Operated Counterbalance Valve Circuit 2-32
2-65 Brake Valve Circuit 2-33
2-66 Pressure-Reducing Valve 2-33
2-67 Flow-Volume-Activated Hydraulic Fuse 2-34
2-68 Differential Pressure-Activated Hydraulic Fuse 2-34
2-69 Rupture Disk 2-35
2-70 Check Valve 2-35
2-71 Some Common Check Valve Applications 2-35
2-72 Pilot-Operated Check Valve 2-36
2-73 Shuttle Valve 2-36
2-74 Two-Way, Two-Position Directional Control Valve 2-36
2-75 Three-Way, Two-Position Directional Control Valve 2-36
2-76 Four-Way, Two-Position Directional Control Valve 2-36
2-77 Double-Acting Cylinder Circuit 2-36
2-78 Common Center Conditions for Four-Way, Three-Position Directional Control Valves 2-37
2-79 Deceleration Valve 2-37
2-80 Fixed Orifice, Flange Mounted 2-37
2-81 Globe Valve 2-37
2-82 Needle Valve 2-38
2-83 Pressure-Compensated Flow-Control Valve 2-38
2-84 Temperature Compensation for Flow-Control Valves 2-38
2-85 Positive-Displacement Metering Valve 2-39
2-86 Flow Divider Valves 2-39
2-87 Valve Actuator Symbols 2-40
2-88 Direct-Acting Solenoid Valve Operation 2-40
2-89 Solenoid-Controlled, Pilot-Operated Directional Control Valve 2-41
2-90 Air-Gap Solenoid Operation 2-42
2-91 Wet-Armature Solenoid Construction 2-42
2-92 Conventional Versus Proportional Solenoid Force 2-43
2-93 Servovalve Torque Motor 2-43
2-94 Single-Stage Servovalve 2-44
2-95 Two-Stage Servovalve 2-44
2-96 Flapper Nozzle Servovalve 2-45
2-97 Jet Pipe Servovalve 2-45
2-98 Standard Subplates for Directional Control Valves 2-46
2-99 Examples of Screw-in Cartridge Valves 2-46
2-100 Counterflow Heat Exchanger 2-48

Downloaded from http://www.everyspec.com

2-101 Air-Cooled Heat Exchanger 2-49
2-102 Typical Heat Exchanger Designs 2-50
2-103 Electric Immersion Heater 2-50
2-104 SAE 100R Series Hoses 2-52
2-105 Typical Flare Fittings for Hydraulic Tubing 2-53
2-106 Typical Flareless Fittings for Hydraulic Tubing 2-53
2-107 Typical Self-Sealing Couplings for Hydraulic Hose 2-54
2-108 Cross-Sectional Sketch of a Typical Shock Absorber 2-55
2-109 Sketch of Hydropneumatic Shock Mechanism 2-56
2-110 Sketch of Hydropneumatic Recoil Mechanism 2-56
3-1 Velocity Distribution in a Liquid Between Two Parallel Plates 3-2
3-2 Viscosity and Shear Stress vs Rate of Shear Curves for a Newtonian Fluid 3-4
3-3 Viscosity and Shear Stress vs Rate of Shear Curves for a Plastic Material 3-4
3-4 Viscosity and Shear Stress vs Rate of Shear Curves for a Pseudoplastic Material 3-4
3-5 Viscosity and Shear Stress Curves vs Rate of Shear for a Dilatant Material 3-5
3-6 Viscosity and Shear Stress vs Rate of Shear Curves for a Thixotropic Material 3-5
3-7 Viscosity and Shear Stress vs Rate of Shear Curves for a Rheopectic Material 3-5
3-8 Viscosity vs Rate of Shear Curves for a Newtonian and a Non-Newtonian Fluid 3-5
3-9 Cannon-Fenske Capillary Tube Viscometer 3-6
3-10 Cross-Sectional View of a Saybolt Viscometer 3-6
3-11 Cannon-Master Viscometer 3-7
3-12 Laminar and Turbulent Flow in a Pipe 3-7
3-13 Facsimile of Kinematic Viscosity-Temperature Chart 3-9
3-14 Schematic Representation of Viscosity Index (VI) 3-10
3-15 Viscosity Blending Chart 3-11
3-16 Viscosity vs Pressure at Several Temperatures for a Typical Petroleum Fluid 3-12
3-17 Viscosity vs Temperature at Several Pressures for a Synthetic Fluid 3-12
3-18 Effect of Shear Upon Viscosity of a Typical MIL-H-5606 Hydraulic Fluid in a Pump Orifice Test 3-14
3-19 Effect of Sonic Irradiation on the Viscosity of a Typical MIL-H-5606 Hydraulic Fluid 3-14
3-20 Rotor and Stator Section of Tapered-Plug Viscosity Tester 3-15
3-21 Cleveland Open Cup Apparatus 3-19
3-22 Tag Closed Cup Tester 3-19
3-23 Penske-Martens Closed Cup Tester 3-20
3-24 Autoignition Temperature Test Apparatus 3-20
3-25 Spontaneous Ignition Temperature of a Typical MIL-H-5606 Fluid in Air in Contact With Various Surfaces as a Function of Test Chamber Pressures 3-21
3-26 Spontaneous Ignition Temperature of a Chlorinated Phenyl Methyl Silicone in Air in Contact With Various Surfaces as a Function of Test Chamber Pressure 3-22
3-27 Spontaneous Ignition Temperature of Seven Hydraulic Fluids at Atmospheric Pressure in Contact With a Pyrex Glass Surface as a Function of Oxygen Concentration 3-22
3-28 Test Apparatus for the Pipe Cleaner Evaporation Test 3-23
3-29 High-Pressure Spray Ignition Test Apparatus 3-24
3-30 Low-Pressure Spray Ignition Test Apparatus 3-24
3-31 Spray Flammability Test Setup for SAE AMS 3150 3-25
3-32 Spray Flammability Test Setup for ASTM D 3119 3-25
3-33 Hot Manifold Test Apparatus 3-26
3-34 Apparatus for Determination of Linear Flame Propagation Rate 3-27
3-35 Vapor Pressure vs Temperature of Typical Fluids 3-29
3-36 Isoteniscope 3-30
3-37 Evaporation Loss Test Apparatus 3-31
3-38 Densities of Typical Fluids 3-31
3-39 Coefficient of Thermal Expansion vs Temperature of Several Types of Hydraulic Fluids 3-33
3-40 Lipkin Bicapillary Pycnometer Used to Determine Density and Specific Gravity of Liquids 3-33
3-41 Bingham Pycnometer Used to Determine Density and Specific Gravity of Liquids 3-34
3-42 Specific Heat vs Temperature of Several Types of Hydraulic Fluids 3-35

Downloaded from http://www.everyspec.com

3-43 Thermal Conductivity vs Temperature of Several Types of Hydraulic Fluids 3-35
3-44 Fluid Percent Volume Compression vs Pressure of Typical Fluids 3-36
3-45 Example Representation of Secant and Tangent Bulk Moduli 3-37
3-46 Apparatus for Measurement of Adiabatic Bulk Modulus by Sonic Speed 3-38
3-47 Graph of Constant Used in Eq. 3-35 3-39
3-48 Emulsion Test Apparatus 3-42
3-49 Foaming Test Apparatus 3-42
3-50 Nitrogen Solubility vs Pressure of Two Petroleum Products 3-44
3-51 Solubility of Air in Liquids 3-45
3-52 Trace Sediment Test Tube 3-46
3-53 Stribeck Diagram for Coefficient of Friction 3-46
3-54 Bench-Type Friction and Wear Testers 3-50
3-55 Schematic Diagram of the Cameron-Plint Wear Test Apparatus 3-51
3-56 Radiation Limits for Various Base Fluids 3-57
4-1 Viscosity-Temperature Graph of Petroleum-Base Liquids 4-23
4-2 Viscosity-Temperature Graph of Synthetic Hydrocarbon Liquids 4-25
4-3 Viscosity-Temperature Graph of Glycol/Water-Glycol Liquids 4-26
4-4 Viscosity-Temperature Graph of Silicone and Polyphenyl Ether Liquids 4-27
4-5 Viscosity-Temperature Graph of Polysiloxane Liquids 4-28
4-6 Viscosity-Temperature Graph of Phosphate Ester and CTFE Liquids 4-29
7-1 One-Gallon Screw Cap Can, Type V, Class 4 7-2
7-2 One-Quart Hermetically Sealed Can, Type I 7-2
7-3 One-Pint Spout Top Can, Type V, Class 8 7-2
7-4 Markings on Top and Side of 55-gal Drum 7-3
7-5 Markings on Sides of 5-gal Tight-Head Pail 7-4
7-6 Relative Particle Sizes 7-7
7-7 Jamming of Valve Spool by Particles 7-7
7-8 Example of Servovalve Spool Damage by Contamination 7-8

Downloaded from http://www.everyspec.com

LIST OF TABLES

Table No.	Title	Page
2-1	Causes of Solenoid Failures	2-41
2-2	Example of Pipe Sizing	2-51
2-3	Example of Steel Tubing Sizing	2-52
2-4	Examples of SAE J 517 100R Series Hose	2-52
2-5	Pressure Losses in Pipes	2-55
3-1	Kinematic Viscosities of Several Military Specification Hydraulic Fluids	3-8
3-2	Estimated Shear Rates of Lubricants	3-13
3-3	Pour Point Requirements of Six Military Specification Hydraulic Fluids	3-16
3-4	Flammability Characteristics of Some Military Specification Hydraulic Fluids	3-18
3-5	Low-Pressure Spray Flammability Test Results of Some Typical Hydraulic Fluids	3-26
3-6	Foaming Requirement of Military Specification Liquids, Method ASTM D 892	3-43
3-7	Dissolved Gas Contents of Various Fluids at Atmospheric Pressure	3-44
3-8	Maximum Operating Temperature of Hydraulic Fluids	3-54
3-9	Oxidation and Varnishing Resistance of Hydraulic Fluids	3-55
3-10	Deterioration Temperature of Hydraulic Fluids	3-56
3-11	Hydrolytic Stability of Hydraulic Fluids	3-56
3-12	Liquid-Metal Corrosiveness Test Methods	3-64
3-13	Oxidation-Corrosion Limits of Several Military Hydraulic Fluid Specifications	3-65
3-14	Humidity Type Corrosiveness Tests	3-66
4-1	Comparison of Hydraulic Fluid Property Requirements	4-3
4-2	Comparison of Hydraulic Fluid Flammability Characteristics	4-5
4-3	Flammability and Ignition Properties of Qualified and Candidate Hydraulic Fluids, Including Proposed Minimum Requirements	4-6
4-4	Characteristics of Hydraulic Fluid Base Stocks	4-8
4-5	MIL-F-17111B (OS): Power Transmission Fluid	4-30
4-6	MIL-H-17672D: Hydraulic Fluid, Petroleum, Inhibited	4-32
4-7	MIL-H-27601A (USAF): Hydraulic Fluid, Petroleum-Base, High-Temperature	4-34
4-8	MIL-H-46001D: Hydraulic Fluids, Petroleum-Base, for Machine Tools	4-36
4-9	MIL-H-5606F: Hydraulic Fluid, Petroleum-Base, Aircraft, Missile, and Ordnance	4-38
4-10	MIL-H-6083E: Hydraulic Fluid, Petroleum-Base, for Preservation and Operation	4-40
4-11	MIL-H-81019D: Hydraulic Fluid, Petroleum-Base; Ultra Low Temperature, Metric	4-42
4-12	MIL-L-17331H(SH): Lubricating Oil, Steam Turbine and Gear, Moderate Service	4-44
4-13	MIL-L-2104F: Lubricating Oil, Internal Combustion Engine, Tactical Service	4-46
4-14	MIL-L-46167B: Lubricating Oil, Internal Combustion Engine, Arctic	4-48
4-15	MIL-H-46170B: Hydraulic Fluid, Rust-Inhibited, Fire-Resistant Synthetic Hydrocarbon-Base	4-50
4-16	MIL-H-83282C: Hydraulic Fluid, Fire-Resistant, Synthetic Hydrocarbon-Base, Aircraft, Metric	4-52
4-17	MIL-H-87257: Hydraulic Fluid, Fire-Resistant, Low-Temperature, Synthetic Hydrocarbon-Base, Aircraft and Missile	4-54
4-18	MIL-H-22072 C(AS): Hydraulic Fluid, Catapult	4-56
4-19	MIL-H-5559(AS): Hydraulic Fluid, Arresting Gear	4-57
4-20	SAE J 1703: Motor Vehicle Brake Fluid	4-58
4-21	MIL-B-46176A: Brake Fluid, Silicone, Automotive, All-Weather, Operational and Preservative, Metric	4-60
4-22	MIL-L-87100 (USAF): Lubricating Oil, Aircraft Turbine Engine, Polyphenyl-Ether-Base	4-62
4-23	MIL-S-81087C: Silicone Fluid, Chlorinated Phenyl Methyl Polysiloxane	4-64
4-24	VV-D-1078B: Damping Fluid, Silicone Base (Dimethyl Polysiloxane)	4-66
4-24A	Selected Properties of VV-D-1078B Fluid	4-67
4-25	MIL-H-19457D (SH): Hydraulic Fluid, Fire-Resistant, Nonneurotoxic	4-68
4-26	MIL-H-53119 (ME): Hydraulic Fluid, Nonflammable, Chlorotrifluoroethylene-Base	4-70
5-1	Fluid Properties and Characteristics and Their Primary System Influence	5-11
6-1	Effect of Mechanical and Liquid Variables on Cavitation	6-3
6-2	Properties of Elastomers	6-4

Downloaded from http://www.everyspec.com

6-3 Common Trade Names and Recommended Uses of Basic Types of Elastomers 6-5
6-4 Comparison of Properties of Commonly Used Elastomers 6-7
6-5 Compatibility of Hydraulic Fluids With Elastomers 6-8
6-6 Rubber Swell Limits of Military Specification Hydraulic Fluids 6-11
6-7 Effect of Hydraulic Fluids on Standard Paints 6-12
6-8 Various Fluid Property Effects 6-17
6-9 Fluid Properties and Characteristics and Their Primary System Influence 6-18
6-10 Operating Temperature Ranges for Military Specification Fluids 6-19
6-11 Hydraulic Fluid Substitution for M110A2 6-21
6-12 Fluid Selection Questions 6-22
6-13 Quick Reference for Selection of a Hydraulic Fluid 6-23
6-14 Comparison of Synthetic Fluids 6-25
7-1 Hydraulic Fluid Container Sizes 7-1
7-2 Component Contaminant Sensitivity Tests 7-8
7-3 ACFTD Particle Count and Weight Equivalent 7-11
7-4 Possible Sources of Elements in Oil 7-12
7-5 Chemical and Physical Methods for Decontaminating CB Agents 7-18

Downloaded from http://www.everyspec.com

LIST OF ABBREVIATIONS AND ACRONYMS

AA = atomic absorption
ACFTD = air cleaner fine test dust
ACM = polyacrylate rubber
AIT = autoignition temperature
ANSI = American National Standards Institute
API = American Petroleum Institute
ASA = American Standard Association
ASAVLEA = acceleration-sensing automatic variable bad energy absorber
ASH/SLASH = activated solution of hypochlorite/self-limiting activated solution of hypochlorite
ASM = Armored Systems Modernization
ASTM = American Society for Testing and Materials
AU = polyurethane rubber
BDAR = battlefield damage assessment and repair
BZ = quinuclidinyl benzilate
BHT = butylated hydroxytoluene
CAC = contamination avoidance cover
CARC = chemical-agent-resistant coating
CB = chemical and biological
CDIW = chemcial agent detection, identification, and warning
CD = epichlorohydrin rubber
CR = chloroprene rubber
CREP = corrosion rate evaluation procedure
CTFE = chlorotrifluoroethylene
CVR = critical volume reservoir
DCV = directional control valve
DOCP = dispersant olefin copolymers
DPMA = dispersant polymethacrylate
DS2 = decontaminating solution No. 2
ECO = epichlorohydrin rubber
EGME = ethylene glycol monomethyl ether
EHD = elastohydrodynamic
EP = extreme-pressure
EPA = Environmental Protection Agency
EPDM = ethylene propylene diene rubber
EPM = ethylene propylene rubber
ETO = ethylene oxide
EU = polyurethane rubber
FKM = fluorocarbon rubber
FLEA = fixed load energy absorbers
FSi = fluorosilicone
GRS = SBR rubber
HEIT = high-explosive incendiary tracer
HFA = highwater content fluid
HFAE = oil-in-water emulsion
HFAS = highwater content solution
HFB = water-in-oil emulsion
HFC = water-glycol fluid
HFD = synthetic fluid
HFPO = hexafluoropropylene oxide
HSD = hydrogenated styrene-diene
HST = hydrostatic transmission
HTH = high-test hypochlorite
ICP = inductively coupled plasma
ICPAES = inductively coupled plasma atomic emission spectrometer
ID = inside diameter
IIR = butyl rubber
IPE = individual protective equipment
ISO = International Organization for Standardization
JIC = Joint Industry Conference
JOAP = Joint Oil Analysis Program
LSHT = low-speed, high-torque
LVDT = linear variable differential transformer
MSDS = material safety data sheet
NAS = National Aerospace Standard
NATO = North Atlantic Treaty Organization
NBR = nitrile or Buna N
NFH = nonflammable hydraulic fluid
NFPT = National Fluid Power Association
NR = natural rubber
OCP = olefin copolymers
OD = outside diameter
PAA = peracetic acid
PAO = polyalphaolefin
PIXE = proton-induced X-ray emission
PLC = programmable logic controllers
PMA = polyalkylmethacrylate
PTO = power takeoff
QA = quality assurance
R&O = rust and oxidation
SAE = Society of Automotive Engineers
SBR = styrene-butadiene rubber
SFS = Saybolt Furol Seconds
SI = International System of Units
SI = silicone rubber
STB = supertropical bleach
SUS = Saybolt Universal Seconds
TCP = tricresyl phosphate
TOCP = triorthocresyl phosphate
VG = viscosity grade
VI = viscosity index
VLEA = variable load energy absorber
ZDP = zinc dialkyl dithiophosphate

Downloaded from http://www.everyspec.com

CHAPTER 1
INTRODUCTION

This chapter provides a general introduction to hydraulic fluid power. Power transmission is described. The concept of graphic symbols representing hydraulic circuits is discussed, and several examples are shown. Hydraulic fluids are discussed in very general terms, and factors affecting fluid and system performance are introduced. Fire-resistant hydraulic fluids are presented briefly. Factors to be considered in the choice and application of fluids are defined. These include basic fluid characteristics, as well as cost, availability, effects of contamination, handling, and storage.

1-1 GENERAL

The development of the present level of technology has depended on the evolution of methods for the generation, distribution, and use of power. The energy requirements of the domestic population and the national defense effort increase at a rate of 2 to 3% per year. Various estimates place the annual rate of energy consumption in the United States at 1.06 to 1.6×10^{20} J (1.0 to 1.5×10^{17} Btu) per year by the year 2000 (Ref. 1). This increasing demand for power requires the continued development of methods for power transmission, control, and use. Fluid power technology plays an important role in this task and promises to be even more important in the future.

1-2 METHODS OF TRANSMITTING POWER

The majority of contemporary power transmission systems can be classified as electrical, mechanical, or fluid. Fluid power systems can be further divided into pneumatic and hydraulic systems, depending on the fluid medium used to transmit force. The fluids employed in pneumatic power and control systems are gases which are characterized by high compressibility. In contrast, hydraulic fluids are relatively incompressible liquids.

1-2.1 ELECTRICAL POWER TRANSMISSION

Power is transmitted electrically by imposing an electromagnetic field on a conductor. Electric systems are especially suitable for power transmission over long distances and are best applicable to low-power operations. Magnetic saturation, a fundamental limitation of electrical machines, limits the torque developed by an electric motor. Material limitations also affect the speed with which electrical servomechanisms can respond. Heat dissipation is a problem of considerable importance in electrical power transmission.

1-2.2 MECHANICAL POWER TRANSMISSION

Mechanical power transmission systems employ a variety of kinematic mechanisms such as belts, chains, pulleys, sprockets, gear trains, bar linkages, and cams. These mechanisms are suitable for the transmission of motion and force over relatively short distances. The disadvantages of mechanical systems include lubrication problems, limited speed and torque control capabilities, uneven force distribution, and relatively large space requirements. Mechanical systems are also plagued by accuracy and adjustment problems associated with wear, cable stretch, bending, distortion, etc.

1-2.3 PNEUMATIC POWER TRANSMISSION

Pneumatic power is transmitted by the pressure and flow of compressed gases. The most common gas used is air. Pneumatic systems use relatively simple equipment, have small transmission lines, and do not present a fire hazard. Disadvantages include high fluid compressibility and small power-to-size ratio of components. Pneumatic power systems are more elastic than mechanical systems and are very sensitive to small changes in pressure and flow. For this reason they are best suited for pilot or control systems or low-power applications that do not require a high degree of positioning or holding accuracy.

1-2.4 HYDRAULIC POWER TRANSMISSION

Hydraulic power is transmitted by the pressure and flow of liquids. For many years petroleum oils were the most common liquids, but other types of liquids are now being widely used. Hydraulic systems are mechanically stiff and can be designed to give fast operation and move very large loads. They can be employed over greater distances than mechanical types but not as far as electrical systems.

There are several important advantages of hydraulic power transmissions (Ref. 2). These include

1. Ability to provide high levels of readily regulated torque and force
2. Infinitely variable linear or rotary speed over a wide range
3. Instantly reversible without coming to a gradual stop
4. Can be stalled without damage and without the necessity to restart the prime mover when the stall-producing load is removed
5. High power output from relatively small, lightweight packages

Downloaded from http://www.everyspec.com

6. High accuracy and extreme stiffness for positioning and holding heavy loads

7. Readily automated without electronics

8. Fully adaptable to electrical or electronic controls including programmable logic controllers

9. Provides cushioning to reduce the mechanical effects of impact or shock loads.

There are also disadvantages to consider (Ref. 2). They include

1. The hazards associated with any high-pressure system

2. The fire hazard associated with hydraulic fluids, almost all of which are flammable to some extent

3. Hydraulic fluid leakage

4. Disposal of used fluids and cleanup of large leaks.

The functions of a hydraulic fluid are to transmit force applied at one point in the system to some other location and to produce any desired change in the direction or magnitude of this force. To function efficiently, the hydraulic fluid must be relatively incompressible and must flow readily. In addition, the hydraulic fluid must perform certain other functions, such as lubrication and cooling, which are secondary in nature but important to the overall operation of the hydraulic system.

1-3 PRINCIPLES OF HYDRAULICS

1-3.1 GENERATION AND USE OF FLUID POWER

The use of hydraulic fluids to generate and transmit power is based upon the physical laws that govern the mechanics of liquids. The principles of fluid mechanics, which include both hydrostatics and fluid dynamics, have been developed over a period of several centuries and now constitute a fundamental branch of science and engineering. A knowledge of the application of these principles to the design and use of fluid power systems can be obtained by a study of any of several references from the vast literature of fluid mechanics (Refs. 2, 3, 4, and 5).

1-3.1.1 Fluid Power Circuits

The application of fluid power requires some type of fluid circuit. Many different circuit designs are possible for a given application. Most hydraulic circuits, however, represent some variation of a few basic circuit designs, such as pump circuits, fluid motor circuits, accumulator or intensifier circuits, and control circuits.

All hydraulic circuits consist of some combination of six basic components: (1) a source of energy, e.g., a pump, (2) a means of converting fluid energy into mechanical motion, e.g., a hydraulic motor or actuator, (3) fluid-transfer piping, (4) pressure, directional, and flow controls, (5) a fluid reservoir, and (6) a hydraulic fluid. The output of the hydraulic circuit is determined by the manner in which the various components are arranged. The individual components are described in Chapter 2.

1-3.1.2 Symbolic Representation of Components

The rapid development of fluid power applications following World War II created a need for standard fluid power symbols and specifications to facilitate communication and provide a widely accepted means of representing fluid power systems. This need was first met by the Joint Industry Conference (JIC), which published a set of graphical symbols for system components in September 1948. In 1958 the American Standard Association (ASA) (now known as the American National Standards Institute (ANSI)) adopted symbols based on a revision of the JIC symbols. Responsibility for subsequent revisions and updates of fluid power graphic symbology in the United States has rested with the National Fluid Power Association (NFPA). The US national document concerning fluid power symbols is ANSI Y32.10 (Ref. 6). The need for common international standardization of symbology resulted in the development of ISO Standard 1219 (Ref. 7) by the International Organization for Standardization (ISO). Symbology from this standard is used throughout this handbook. See Appendix A for a cross-reference of fluid power standards.

Graphic fluid power symbols are now widely used both for preparing circuit diagrams and as an aid in circuit design and analysis. They illustrate flow paths, connections, and component functions but do not indicate operating parameters or construction details. There are nine basic symbol classifications: fluid conductors, energy and fluid storage, fluid conditioners, linear devices, controls, rotary devices, instruments and accessories, valves, and composite symbols. There is a detailed discussion of the use and meaning of the ISO fluid power symbols in the ISO standard (Ref. 7); however, a brief explanation of a few of the more common symbols will aid the reader in further study.

1-3.1.2.1 Directional Control Valves

The basic directional control valve (DCV) symbol consists of one or more squares called envelopes. The number of envelopes corresponds to the number of discrete functional positions of the valve. Inside each envelope are lines representing the flow paths and flow conditions between ports. Arrows are used to indicate the usual or preferred direction of flow through the flow paths. T-shaped symbols indicate that a flow path is blocked.

The lines representing the fluid conductors are drawn to the envelope representing the neutral, or unactuated, position of the valve. In a three-position valve this is normally the center position, but in a two-position valve, it is the position to which the valve is spring offset when it is unactuated.

Each intersection of the internal flow lines with the perimeter of an envelope represents a valve port. The number of ports indicated in any one envelope is used in the descriptions of DCVs. For example, the valve symbol in Fig.

Downloaded from http://www.everyspec.com

1-1 shows four such intersections in each of the three envelopes; thus it would be described as a four-way, three-position DCV. ("Four ports" equates to four-way.) The normal position of this valve is the center envelope. In that position all four ports are blocked, as indicated by the T-symbol; thus there is no flow through the valve. To attain the flow condition represented by the left-hand envelope, mentally shift that envelope to the center position. The arrows indicate completed flow paths from the pressure port P to the A port and from the B port to the tank port T. Shifting the right-hand envelope to the center position allows flow from P to B and A to T. Multiposition, multiport valves of any complexity can be represented by a suitable combination of such symbols.

1-3.1.2.2 Flow-Control Valves

As the name implies, these valves control the rate of fluid flow through working portions of the system. Orifices and orifice-type flow controls, such as globe and needle valves, are represented graphically by arcs on both sides of the flow line, as shown in Fig. 1-2(A). If the size of the restriction is variable, a diagonal arrow is drawn across the symbol, as shown in Fig. 1-2(B). Pressure compensation is indicated by including a small vertical arrow across the flow line, whereas temperature compensation is shown by a symbol representing a bulb-type thermometer as shown in Figs. 1-2(C) and (D), respectively.

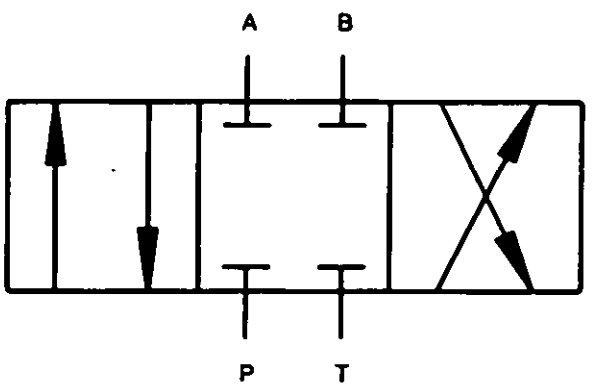

Figure 1-1. Three-Position, Four-Way Directional Control Valve

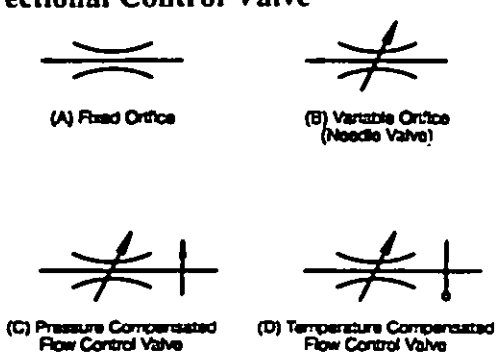

Figure 1-2. Graphic Symbols for Flow-Control Valves

1-3.1.2.3 Pressure Control Valves

The most common types of pressure controls are relief valves and pressure-reducing valves. The pressure relief valve symbols, shown in Fig. 1-3(A), consist of a square envelope with a flow arrow offset to one side, which indicates a normally closed configuration. The spring, shown on the left-hand side of the envelope, holds the valve closed. Upstream pressure is shown by the dashed line. The downstream line goes directly to the system reservoir. The flow arrow in the envelope of the pressure-reducing valve, as shown in Fig. 1-3(B), connects the upstream (inlet) line to

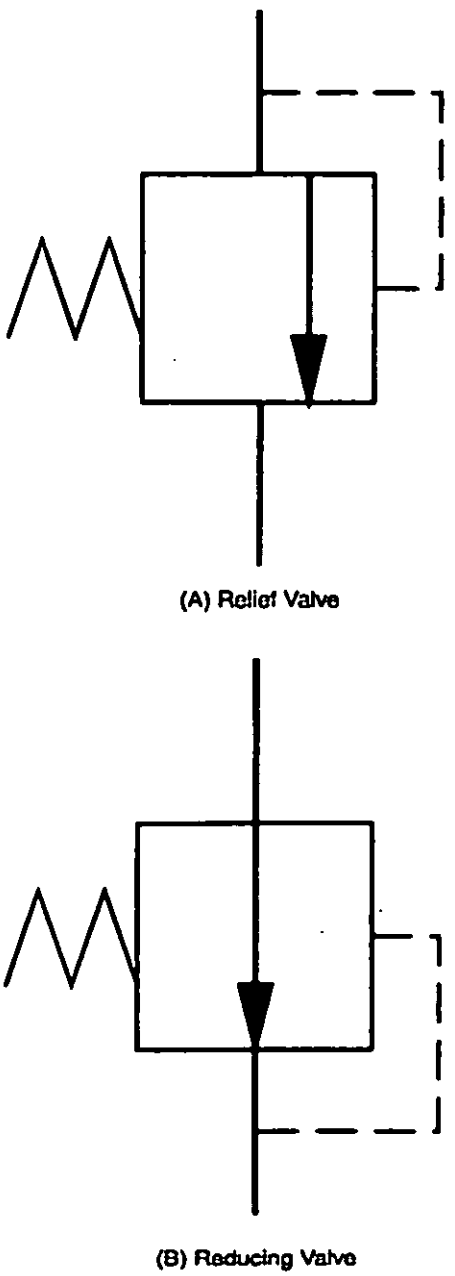

Figure 1-3. Pressure Control Valve Graphic Symbols

Downloaded from http://www.everyspec.com

the downstream (outlet) line and indicates a normally open configuration. Since the purpose of the valve is to regulate downstream pressure, the dashed sensing line is directed to the outlet line.

1-3.1.2.4 Rotary Pumps and Hydraulic Motors

The basic symbol for a hydraulic pump is a circle with an outward-pointing triangle as shown in Fig. 1-4(A). The triangle is completely filled to indicate liquid flow; an unfilled triangle indicates gas flow. Variations of this basic symbol are used to indicate bidirectional flow capability (two triangles), variable displacement (a diagonal arrow across the symbol as in the flow-control valves), and pressure compensation (a short, vertical arrow, again as in flow control valves). The symbol for a hydraulic motor is similar except that the triangle points inward as shown in Fig. 1-4(B).

Some applications require hydraulic motors that rotate less than 360 deg. Such devices are termed oscillatory motors, and they are commonly found in robotic applications, maintenance and assembly stands, and assembly line operations. These motors have mechanical stops, which allow rotation through a predetermined number of degrees in either direction. The symbol for these oscillatory devices is shown in Fig. 1-5.

1-3.1.2.5 Hydraulic Cylinder (Linear Actuators)

The most common types of hydraulic cylinders are single acting, double acting, and double ended. A single-acting cylinder is powered by fluid power in only one direction (either extending or retracting.) Motion in the opposite direction is the result of the load, gravity, a spring, or an opposing cylinder. A single-acting, spring-returned cylinder is shown in Fig. 1-6(A).

A double-acting cylinder can be powered in both directions through ports on either side of the piston. In each direction of operation, one port allows pressurized fluid to enter the cylinder, whereas the other port allows fluid to leave the cylinder and return to the reservoir. A double-acting cylinder is shown in Fig. 1-6(B).

The two cylinders just described have a rod extending from only one end, but a double-ended cylinder has a rod extending from each end. Both are connected to the piston so that one retracts as the other extends. Double-ended cylinders may be either single or double acting. A double-acting, double-ended cylinder is shown in Fig. 1-6(C).

1-3.1.3 Uses of Hydraulic Power

The manner in which hydraulic power can be used is limited primarily by the imagination of the designer. Hydraulic power has found extensive use in manufacturing and construction machinery. Fluid-power-operated presses and material handling machinery are common fixtures in any production plant. In the construction and earth-moving industries, hydraulic power is used on almost every piece of

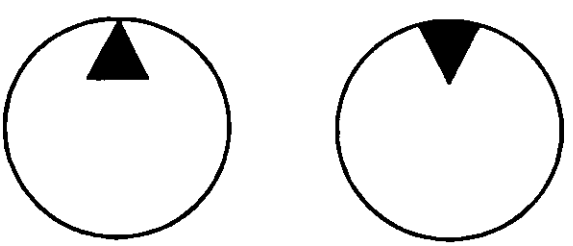

(A) Hydraulic Pump (B) Hydraulic Motor

Figure 1-4. Graphic Symbols for Hydraulic Pump and Motor

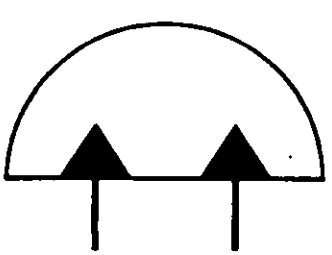

Figure 1-5. Graphic Symbol for a Hydraulic Oscillatory Device

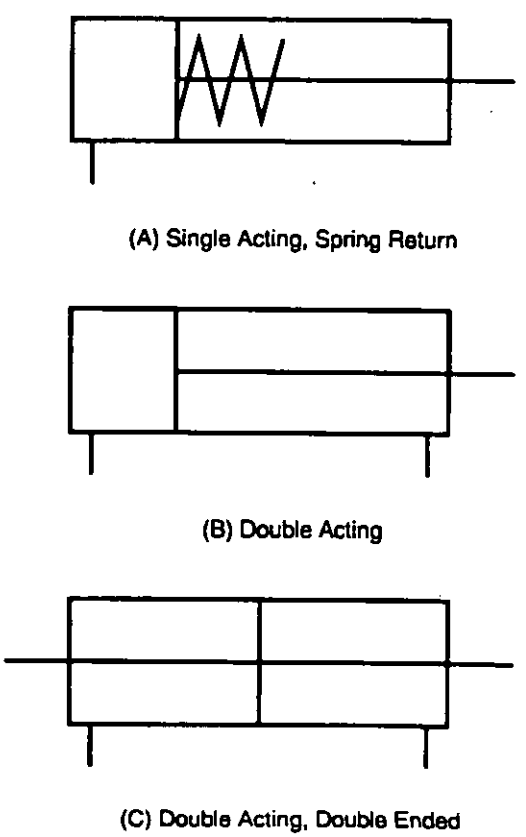

(A) Single Acting, Spring Return

(B) Double Acting

(C) Double Acting, Double Ended

Figure 1-6. Graphic Symbols for Hydraulic Cylinders

Downloaded from http://www.everyspec.com

equipment. Other industries making extensive use of fluid power are aerospace, agriculture, petroleum, automotive, chemical, and food processing.

1-3.2 REQUIREMENTS FOR HYDRAULIC FLUIDS

The hydraulic fluid is an essential and important component of any hydraulic power or control system. No other component of the circuit must perform as many functions or meet as many requirements as the hydraulic fluid. The hydraulic fluid must not only provide the medium for efficient power transmission, but it must also lubricate, cool, protect from corrosion, not leak excessively, and perform numerous other functions depending on the system design. However, even if a hydraulic fluid can perform these system functions adequately, it may still be less than satisfactory in terms of usage and compatibility factors. In many hydraulic systems it is necessary that the hydraulic fluid be nontoxic and fire-resistant. It must be compatible with the structural materials of the system. The hydraulic fluid should exhibit stable physical properties during a suitable period of use. It should be easy to handle when in use and in storage, and it is desirable, of course, that it be readily available and inexpensive.

The selection of a hydraulic fluid is further complicated by the vast number of liquids currently available. These range from water and mineral oils to special purpose synthetic liquids. It is thus necessary for the system designer to have at least an elementary understanding of the terminology prevalent in the specification of hydraulic fluids.

1-3.2.1 System Dependency of the Hydraulic Fluid

1-3.2.1.1 Temperature

Temperature is a system parameter rather than a characteristic of the fluid. However, the physical properties of hydraulic fluids are influenced by the operating temperature. High temperature can cause a decrease in viscosity and lubricity, which results in increased leakage through seals and detrimental friction and wear. Many hydraulic fluids, as well as additives used in their formulation, can experience molecular breakdown at elevated temperatures.

Viscosity increases with decreasing temperature; thus the lowest operating temperature for a given liquid is that corresponding to the maximum viscosity which can be satisfactorily accommodated by the system.

Chemical degradation of the fluid, termed oxidation, is also affected by temperature. The higher the temperature, the greater the rate of oxidation, which causes gum, sludges, varnishes, and acids to form in the fluid. (See par. 1-3.2.1.5.) Chemical degradation of the fluid can also result from purely thermal (no air) stress and/or hydrolysis (reaction of the fluid with water). Both of these modes of hydraulic fluid degradation are seen more frequently than oxidation because in most hydraulic systems exposure to air while the fluids are hot is minimal.

Hence an important requisite in the selection of hydraulic fluids is a thorough knowledge of the storage temperature, the average operating temperature, the high and low operating temperatures, and the temperatures of local system hot spots. With these known it then becomes necessary to know the manner in which the liquid properties vary within the system temperature range.

1-3.2.1.2 Viscosity

Viscosity, often referred to as the most important single property of a hydraulic fluid, is the property that characterizes the flow resistance of liquid. Low-viscosity liquids transmit power more effectively, whereas high viscosity is required to lubricate and to reduce leakage. Thus the allowable viscosity range depends on a compromise between the power transmission characteristics and the sealing and lubricating properties.

Viscosity depends upon temperature and pressure and generally increases with decreasing temperature or increasing pressure. The viscosity index (VI) is a measure of temperature dependence. Liquids with a high viscosity index exhibit a smaller variation of viscosity with temperature than do liquids with a low VI. Low-viscosity liquids are less affected by pressure than high-viscosity liquids, although different classes of hydraulic fluids have significantly different pressure-viscosity characteristics.

Another factor that can influence the viscosity is the rate of shear if the fluid contains additives that are not shear stable. Liquids containing additives that consist of large polymer molecules can exhibit a temporary decrease in viscosity when subjected to high shear rates. If the liquid is subjected to shear-rate conditions that tend to break down those large molecules, permanent changes in viscosity can result. Fluids affected by shear rate are termed non-Newtonian materials.

Viscosity affects many operational factors in a hydraulic system—mechanical friction, fluid friction, pump slippage, cavitation, leakage, power consumption, and system controllability. The use of a hydraulic fluid with a low viscosity can lead to increased pump slippage, excessive wear of moving parts, and hydraulic fluid loss due to leakage. A viscosity that is too high will cause increased pressure loss and power consumption and, as a result of liquid friction, can lead to excessive system temperatures.

1-3.2.1.3 Compatibility With System Materials

Chemical compatibility of a hydraulic fluid with the system materials sometimes requires compromises in the selection of the hydraulic fluid or the materials of construction. The hydraulic fluid should be chemically inert and should not react with materials of the system or the environment. In turn, the construction materials should not affect the properties of the hydraulic fluid.

Downloaded from http://www.everyspec.com

Corrosion prevention is one of the many functions of the hydraulic fluid. Air and moisture are always present, to some degree, in hydraulic systems. Therefore, most hydraulic fluids contain a rust inhibitor and/or a metal deactivator, which coats the metal surfaces.

Copper is an undesirable material for hydraulic systems because it acts as a catalyst for the oxidation of many hydraulic fluids. The liquid oxidation rate increases with increasing temperature and is enhanced by the presence of water, air, and solid contaminants in the fluid. Chemical additives are commonly used in hydraulic fluids to control the rate of oxidation.

Seal materials often present a difficult design problem from the viewpoint of compatibility with hydraulic fluids. Natural rubber reacts in some manner with nearly all hydraulic oils. The reaction of synthetic rubbers depends upon the type of synthetic and the liquid to which it is exposed. The aniline point of the fluid can be used as a relative indication of the effect of mineral oils on rubber. Oils with high aniline points generally cause less swelling or shrinking than oils with low aniline points. High aromaticity of a mineral oil is usually an indication that the oil will cause a high degree of swelling in conventional rubber. In general, some swelling of the system elastomers (~10 to 15%) is desirable to minimize leakage of the fluid.

As mentioned previously, compatibility is not solely a problem of selecting a hydraulic fluid. When a hydraulic fluid is found that has desirable performance characteristics but is chemically incompatible with some system material, a better overall system is often obtained if the construction material is changed rather than the hydraulic fluid. However, in many military applications, a change in construction material is not easily accomplished. It has often been necessary to change the hydraulic fluid or to develop a new hydraulic fluid for existing equipment.

1-3.2.1.4 Hydraulic System Accuracy, Speed of Response, and Stability

The type of hydraulic fluid used in a hydraulic system is an important factor in determining system accuracy, response speed, and stability. These characteristics of a system are not determined by any one property of a liquid; they depend on the combination of several properties, especially viscosity (par. 1-3.2.1.2) and compressibility (par. 1-3.2.1.7). If the hydraulic fluid is one of the more compressible types, much of the energy supplied to the system is used to deform the liquid; this deformation results in loss of response speed and accuracy of system component operation. Also, if liquid transmission lines are long, compression delays in control signals can result in interference of various signals and erratic component response. If a hydraulic fluid having too high a viscosity is used, flow resistance and pressure drops in the system increase and operation becomes sluggish. If the viscosity is too low, control precision may be lost.

1-3.2.1.5 Fluid Stability (Temperature and Shear)

The stability of a hydraulic fluid determines the length of time it remains useful either in service or in storage. A stable liquid exhibits only small changes in characteristics over a suitable period. The degree to which a hydraulic fluid is stable depends upon two factors: (1) its tendency to react with the environment and (2) the changes induced by operational use.

The oxidation stability of a hydraulic fluid is measured by its tendency to decompose or polymerize. Oxidation reactions are markedly accelerated by an increase in temperature. Over a prolonged period, accumulation of oxidation products can cause deterioration of the hydraulic fluid appearing as increased viscosity and sludge deposits. Because all liquids oxidize to some extent at all temperatures, a hydraulic fluid is considered to possess oxidation stability if the changes induced by oxidation over a reasonable period of time do not render the hydraulic fluid unsatisfactory for operational use.

Changes in viscosity can also result from (1) thermal decomposition at local hot spots and (2) the breakdown of VI improver molecules due to high rates of shear.

Like the other factors discussed, stability requirements depend upon system design as well as hydraulic fluid selection. For example, oxidation and hydrolytic stability of a given hydraulic fluid can be extended if the hydraulic system is designed to minimize the amount of air and water that can enter the fluid circuit. Stability is discussed in further detail in Chapter 3.

1-3.2.1.6 Lubricity

The hydraulic fluid must serve as a lubricant between the moving parts of the system in order to minimize friction and wear. To do so, it must have a suitable viscosity and must possess adequate lubricity. The term "lubricity" refers to the ability of a liquid to reduce friction and prevent wear under even the most severe circumstances. Lubricity is a complex function that refers to the shear strength of a thin lubricating film. A liquid that forms a film of low shear strength is said to have good lubricity.

The ability of a liquid to form a film on a surface is important to lubrication. The film should be capable of supporting the loads encountered during operation. Breakdown of the lubricating film causes wear and shortens the life of the system components. In general, higher viscosity liquids are better able to maintain films than those of lower viscosity. System considerations other than lubrication, however, limit the value of viscosity in some applications. Antiwear additives provide a solution to some of these problems.

1-3.2.1.7 Pressure

The reduction of volume of a liquid under pressure is a measure of the compressibility of the liquid. Compressibility influences the power required by the pump, the time

Downloaded from http://www.everyspec.com

required to generate pressure, the speed with which the transmission and control systems respond to input, and the manner in which energy is converted by pressure reduction. The bulk modulus is the reciprocal of the compressibility and is always a positive quantity. A high bulk modulus indicates low liquid elasticity and, hence, a small spring effect when subjected to a pressure change. A liquid with high bulk modulus is desirable in order to obtain good dynamic performance in a hydraulic system. Entrained air in the fluid reduces the bulk modulus. Pressure and temperature also affect the bulk modulus. For most liquids the bulk modulus decreases with increasing temperature and also with decreasing pressure.

1-3.2.1.8 Lacquer and Insoluble Material Formation

The hydraulic fluid should remain homogeneous while in use. The formation and deposit of insoluble materials on parts of the system can cause system malfunction or failure. Insoluble materials can be formed by many different processes, such as oxidation, contamination, thermal degradation, and hydrolytic degradation. Changes in the hydraulic fluid caused by these processes can also affect the solubility of additives and result in the additives becoming insoluble. Insoluble materials can plug small orifices, reduce clearances, damage surfaces, or form deposits on working surfaces. The deposits show up as coatings, varnishes, lacquers, etc.

1-3.2.1.9 Fire Resistance and Nonflammability

The fire resistance of a fluid is an indication of the ease with which a fluid ignites and the degree to which it will support combustion once it has ignited. This is a very difficult characteristic to quantify because of the multitude of conditions under which ignition may possibly occur. Chapter 3 refers to many tests used to define fire resistance. Petroleum-base fluids in general have poor fire resistance, i.e., they ignite readily and burn vigorously. There are, however, other formulations of fluids that display lesser tendencies to ignite and burn and at least one, chlorotrifluoroethylene (CTFE), that will not ignite or burn. These formulations are categorized by ISO standard ISO 6743 (Ref. 8) as follows:

1. *HFA: High-water-based fluids*:

These fluids are at least 80% water. Subcategories are

a. HFAE: Oil-in-water emulsions, which have up to 20% soluble oil and additives

b. HFAS: True solutions using synthetic fluids rather than oil.

Because of the vast number of formulations available in the HFA category, only gross generalizations can be presented concerning applications and limitations. In general, HFA fluids should not be used in systems in which the maximum temperature will exceed 50°C (122°F) in order to minimize fluid degradation. At temperatures below 5°C (41°F), freezing and separation are likely to occur. The high specific gravity of these fluids aggravates pump inlet conditions, and the low viscosity can lead to high wear rates and high internal leakage. On the positive side, these fluids are extremely fire-resistant, and the high specific heat and thermal conductivity help to limit system operating temperatures.

These fluids find their best applications in relatively low-pressure systems in which their low lubricity and viscosity do not present a severe limitation. Some formulations, however, particularly HFAE types with thickeners may be suitable for high-pressure applications.

2. *HFB: Invert (water-in-oil) emulsions*. These fluids are approximately 40% water in an oil base. These fluids retain significant fire resistance because of their water content, but the high percentage of oil provides much better lubrication and viscosity than the HFA fluids. These factors make them more acceptable for high-pressure applications. The water content dictates the same temperature limits as for the HFAs. Solid contaminants are readily transported by these fluids, so special attention must be paid to proper filtration and filter maintenance.

3. *HFC: Water-glycol*. These fluids are generally 35 to 50% water combined with polyethylene glycol or other of the glycols similar to permanent antifreeze. The normal operating temperature range for these fluids is –20 to 60°C (–4 to 140°F); however, high temperatures (above 49°C (120°F)) can cause an unacceptably high rate of evaporation. These fluids are very attractive for cold weather applications. As a group, they have good wear resistance except in high-speed and high-load rotary devices. Water-glycols are generally not compatible with paints, zinc and cadmium platings, certain aluminum alloys, and some die-cast fittings.

4. *HFD: Synthetic fluids*. HFD fluids contain no water. They include phosphate esters, polyol esters, halogenated hydrocarbons, polyalphaolefins, synthetic hydrocarbons, silahydrocarbons, silicate esters, and mixtures of synthetic fluids with petroleum oils. The service temperature range for these fluids is generally –20 to 150°C (–4 to 302°F). They generally have good high-temperature characteristics but relatively low viscosity, and many perform better than water-base fluids and mineral oils, e.g., all aerospace synthetic hydraulic fluids. The high specific gravity of a few synthetics makes pump inlet configurations and suction lines of critical importance. Phosphate esters, polyol esters, synthetic hydrocarbons, and silahydrocarbons all have low specific gravities.

Although the fluids listed here are fire-resistant, none of them are truly nonflammable. (Nonflammable means that they will not ignite or burn at all below specific temperature levels.) They will all burn under certain conditions. Only pure water and a specific type of fluid (chlorotrifluoroethylene (CTFE)) can be considered nonflammable in general applications.

Downloaded from http://www.everyspec.com

Specific examples of all these fluids are discussed in detail in later chapters.

1-3.2.1.10 Density

Fluid density is rigidly defined as mass per unit volume. In more common application, however, specific weight (weight per unit volume) or specific gravity is used. In fluid specifications the specific gravity is far more commonly used because it compares the density of the subject fluid to that of water at 4°C. The density and, consequently, the specific weight and specific gravity of any fluid decrease as temperature increases.

Fluid density affects at least three major areas of fluid power system operation. The first of these is the ability of the pump to "lift" the fluid from the reservoir to the pump inlet. The higher the density, the more difficult this lifting becomes. The failure of the inlet system configuration to consider this problem can lead to cavitation and pump starvation. The result is rapid pump wear and eventually catastrophic pump failure. For fluids with higher densities than those of common petroleum oils, which have specific gravities in the range of 0.85 to 0.90, inlet system designs that do not require lifting the fluid are usually recommended. Such designs—commonly referred to as "flooded suction" or "positive head" designs—are configured so that the fluid level is above the pump.

The second area of concern is the pressure losses in long fluid lines. As with viscosity, the higher the fluid density, the higher the pressure loss experienced due to fluid flow.

The final concern is the actual fluid weight. Higher density means higher weight per unit volume. This can be especially critical in aerospace vehicle applications.

1-3.2.1.11 Volatility

Volatility is the rate at which a fluid will vaporize. Petroleum hydraulic fluids, which generally consist of many hydrocarbon compounds, give off vapors primarily from the lighter fractions of the fluid. The rate at which this vaporization occurs in any given fluid is a direct function of the fluid temperature and an inverse function of the pressure on the surface of the fluid.

Long-term exposure to high temperatures at atmospheric or lower pressures can result in significant loss of volume and increases in both viscosity and density. Highly volatile fluids are more likely to lead to cavitation and pump damage. The vapors released by many hydraulic fluids, especially petroleum oils, can present a significant fire hazard when exposed to open flames or electrical arcs or sparks. Volatility is generally not a significant problem with synthetic-base hydraulic fluids.

1-3.2.2 Other Considerations

1-3.2.2.1 Availability

It is obviously desirable that a hydraulic fluid be readily available. If a hydraulic fluid possesses widely applicable properties and is competitive in terms of cost, it will usually be readily available.

1-3.2.2.2 Cost

Several factors must be considered in the evaluation of the cost of a hydraulic fluid. The purchase cost, the service longevity, storage costs, and rate of system leakage enter into the overall cost evaluation. The purchase of an expensive hydraulic fluid is justified if its properties can result in lower system costs because of reduced replacement frequency, increased component life, or other factors. Consideration should be given, however, to the economy afforded by changes in system design in order to allow use of a less expensive hydraulic fluid.

1-3.2.2.3 Handling

The ease with which a fluid can be handled is an important consideration to the user and to maintenance personnel. Toxicity is perhaps the first factor to consider when handling characteristics are evaluated. The fluid, its vapor, and its decomposition products should have very low toxicity in terms of inhalation, ingestion, or contact with the skin. Highly toxic liquids can be used only if extreme precautions are taken to ensure no harmful effects to operating and maintenance personnel. All fluids that contain hazardous or toxic materials must be appropriately labeled, tagged, or marked in accordance with 29CFR1910.1200 (Ref. 9.) This document also requires that a material safety data sheet (MSDS) must be prepared for all fluids by the manufacturer and be maintained by each user. The MSDS must include, among other requirements, a listing of all hazardous ingredients, permissible exposure limits, and applicable emergency and first aid procedures.

A hydraulic fluid should not have an unpleasant or nauseating odor. Although odor itself does not influence performance, the occurrence of an unusual odor can indicate chemical degradation of the fluid. This is especially true of water-containing fluids in which microbial growth is likely to occur if the biocide additive is depleted. Such growth rapidly degrades the fluid and can form acids that will damage metal surfaces.

1-3.2.2.4 Storage

Many hydraulic fluids have a recommended shelf life after which properties should be retested to assure quality of the fluid. The storage characteristics of a hydraulic fluid are closely related to chemical stability and handling characteristics. The properties of a hydraulic fluid should not deteriorate if the fluid stands in storage for long periods. Precautions should be taken to ensure that contaminants cannot enter the stored hydraulic fluid. Oxidation stability is often used as a criterion during evaluation of the storage characteristics.

1.3.2.2.5 Disposal

Fluid spills and disposal of fluids drained from systems can represent major environmental hazards. Drained fluids

Downloaded from http://www.everyspec.com

must be collected in containers approved by the Environmental Protection Agency (EPA) and disposed of in accordance with EPA-approved methods. Such methods can include burning in approved incinerators or approved combustors for heaters or boilers. Fluids may also be discarded in approved hazardous waste disposal sites. Such disposals will normally be handled by EPA-approved companies.

Spilled fluid may be collected by any convenient means, but whether it is captured as a liquid or absorbed in rags, absorbants, etc., it still must be disposed of by approved methods. Spills must never be washed down the drain. Soil that has been saturated with spilled oil may require special disposal action. Consideration should always be given to selecting a hydraulic fluid that will not present unusual disposal problems.

1-3.2.2.6 Contamination

Hydraulic fluid contamination is one of the most important problems facing the hydraulic equipment user. It is generally agreed throughout the industry that at least 75% of all system failures are the result of fluid contamination (Ref. 10).

There are many types of contaminants, which include solid particles, heat, water, chemicals (including mixing of incompatible hydraulic fluids), air and gases, microbial growth, chemical and biological agents, and nuclear radiation. Much of this contamination, especially particles, water, chemicals, and heat, enter the system from the environment in which the equipment is operated. Therefore, it is important to evaluate carefully the placement of stationary units to minimize the likelihood of external contamination. It is also essential that adequate protection from environmental ingression be provided either in the form of sealed systems, if possible, or by high-quality breather filters that include desiccators or chemical absorbants as necessary.

Much contamination, especially solid particles and heat, is internally generated. Solid particles can be the result of wear, erosion, or air or gas contamination. Wear debris is often generated by surface contact aggravated by the incorrect fluid or fluid that has been degraded by heat, chemicals, or water. Internal wear is also promoted by solid contaminants in the fluid. Erosion often occurs due to very high fluid velocities, especially if the fluid contains solid particles. Air and gas can promote wear, especially in the pump, due to the surface pitting that results from the collapse of bubbles under high pressure. Cavitation damage from the implosion of fluid vapor bubbles can also occur in valves. Chlorinated solvents cause corrosion in hydraulic systems (Ref. 11).

Nuclear radiation damage, termed radiolysis, varies widely in fluids. It depends on many factors, including the type of fluid, the base chemicals from which the fluid is formulated, the additives used in the formulation, and the degree of radiation. In petroleum oils and some synthetics the first noticeable effect of radiation is a change in color. Another early effect is gas evolution, which significantly decreases the flash point and increases vapor pressure. As exposure increases, the viscosity increases dramatically, and is accompanied by changes in viscosity index and pour point. Continued exposure eventually turns all organic fluids into hard, brittle solids (Ref. 12).

Radiolysis of other synthetic fluids varies greatly, depending on their chemical structures. For example, polyglycols experience a high degree of gas evolution, a small increase in viscosity, and increased sensitivity to temperature. Phosphate esters, on the other hand, tend toward molecular splitting and the formation of acids as do the halogenated organics. Silicone-base fluids have a tendency to gel.

Several methods are used to remove various contaminants. Filtration devices, which are discussed in Chapter 2, can be used to remove solid particles. Magnetic plugs and filters can remove ferrous metal particles. Storage in settling tanks allows solid particles to settle out by the effects of gravitational forces. Centrifuges are sometimes used to remove heavy contaminants. If the liquid has good demulsibility properties, water can be removed after it separates from the liquid in a reservoir or storage vessel.

Contamination is addressed in much greater detail in Chapter 7, but a generalized approach to addressing fluid contamination control can be summarized as follows (Ref. 13):

1. Analyze, describe, and quantify the contaminant.
2. Prevent the contaminant from entering the system.
3. Remove the contaminant by filtration or other suitable means.
4. Make the resulting system contaminant level compatible with the contaminant tolerance of the system.

REFERENCES

1. M. A. Elliot, "What's Ahead in Energy", Petroleum Management 70 (October 1964).
2. F. D. Norvelle, *Fluid Power Technology*, West Publishing Company, St. Paul, MN, 1992.
3. Anthony Esposito, *Fluid Power With Applications*, 2nd Ed., Prentice-Hall, Inc., Englewood Cliffs, NJ, 1988.
4. James Sullivan, *Fluid Power Theory and Applications*, 3rd Ed., Prentice-Hall, Inc., Englewood Cliffs, NJ, 1989.
5. Frank Yeaple, *Fluid Power Design Handbook*, Marcel Dekker, Inc., New York, NY, 1990.
6. ANSI Standard Y32.10-1967, *Graphic Symbols for Fluid Power Diagrams*, American National Standards Institute, New York, NY, 1987.
7. ISO 1219-76, *Fluid Power Systems and Components—Graphic Symbols*, International Organization for Standardization, Stockholm, Sweden, 1976.
8. ISO 6743/4-82, *Lubricants, Industrial Oils, and Related Products*, International Organization for Standardization, Stockholm, Sweden, 1982.

Downloaded from http://www.everyspec.com

9. 29 CFR 1910, *Labor*, "Occupational Safety and Health Standards", Office of the Federal Register, National Archives and Records Administration, Washington, DC, 356-72.

10. John G. Eleftherakis, *MHE 236 and MHE 237 Forklift Truck Hydraulic System Reliability Analysis*, FPRC Report No. 85-AF-3, Fluid Power Research Center, Oklahoma State University, Stillwater, OK, for the US Army Materiel Systems Analysis Agency, Aberdeen Proving Ground, MD, December 1985.

11. C. E. Snyder, Jr., G. J. Morris, L. J. Gschwender, and W. B. Campbell, "Investigation of Air Force MIL-H-5606 Hydraulic System Malfunctions Induced by Chlorinated Solvent Contamination", Lubrication Engineering **37**, 457-61 (August 1981).

12. Robert O. Bolt, "Radiation Effects on Lubricants", *CRC Handbook of Lubrication*, E. R. Booser, Ed., Chemical Rubber Company, Cleveland, OH, 1984, pp. 209-23.

13. John G. Eleftherakis, "Contaminant Sensitivity Assessment of Electrohydraulic Valves", Paper No. 891867, Presented at SAE Off Highway Conference and Exposition, Milwaukee, WI, 11-14 September 1989, Society of Automotive Engineers, Warrendale, PA.

BIBLIOGRAPHY

J. G. Ashby and M. J. Pinches, *Power Hydraulics*, Prentice-Hall International (UK) Ltd., Hemel Hempstead, Hertfordshire, England, 1989.

R. M. Austin, *The Seal Users Handbook*, 2nd Ed., British Hydraulics Research Association Fluid Engineering, Cranfield, England, 1979.

F. C. Brink, Jr., "Fire-Resistant Hydraulic Fluids", Lubrication **58** (October-December 1972).

H. H. Buchter, *Industrial Sealing Technology*, John Wiley & Sons, Inc., New York, NY, 1979.

A. Esposito, *Fluid Power With Applications*, 2nd Ed., Prentice-Hall, Inc., Englewood Cliffs, NJ, 1988.

Mobile Hydraulic Design Symposium Proceedings, Fluid Power Society, Milwaukee, WI, 1978.

T. Frankenfield, *Using Industrial Hydraulics*, The Rexroth Corporation, Bethlehem, PA, 1979.

C. C. Hedges, *Fluid Power Designers Manual*, Womach Educational Publications, Dallas, TX, 1965.

A. H. Hehn, *Fluid Power Troubleshooting*, Marcel Dekker, Inc., New York, NY, 1984.

R. P. Lambeck, *Hydraulic Pumps and Motors: Selection and Applications for Hydraulic Power Control Systems*, Marcel Dekker, Inc., New York, NY, 1983.

Industrial Hydraulic Technology, Parker Hannifin Corp., Power and Controls Group, Cleveland, OH, 1974.

J. J. Pippinger, *Hydraulic Valves and Controls: Selection and Application*, Marcel Dekker, Inc., New York, NY, 1984.

W. W. Reeves, *The Technology of Fluid Power*, Prentice-Hall, Inc., Englewood Cliffs, NJ, 1987.

C. E. Snyder *et al.*, "Determination of the Flammability Characteristics of Aerospace Hydraulic Fluids", Lubrication Engineering **37**, 705-14 (December 1981).

C. E. Snyder *et al.*, "Air Force Nonflammable Hydraulic System Materials Development", Paper No. 851908, Society of Automotive Engineers, Warrendale, PA, October 1985.

J. A. Sullivan, *Fluid Power: Theory and Applications*, 3rd Ed., Prentice-Hall, Inc., Englewood Cliffs, NJ, 1989.

W. Wolansky and A. Akers, *Modern Hydraulics: The Basics of Work*, Merrill Publishing Company, Columbus, OH, 1988.

F. Yeaple, *Fluid Power Design Handbook*, 2nd Ed., Marcel Dekker, Inc., New York, NY, 1990.

Downloaded from http://www.everyspec.com

CHAPTER 2
POWER TRANSMISSION EQUIPMENT

This chapter is devoted to brief descriptions of the most common fluid power hardware. Nomenclature is explained and the operating principles of each general component type are discussed. Illustrations are provided to enhance the descriptions and explanations. Equations are included where appropriate, especially in the paragraphs in which heat generation, heat transfer, and temperature rise are discussed.

2-0 LIST OF SYMBOLS

A = cross-sectional area or area of a radiating surface, m^2 (ft^2)
C = heat transfer coefficient, $W/(m^2 \cdot K)$ ($Btu/(h \cdot ft^2 \cdot R)$)
c_p = specific heat, J/(kg·K) (Btu/(lbm·R))
D = diameter, m (ft)
F_A = factor that accounts for the geometric orientation of surfaces and their emittances, dimensionless
f = coefficient of friction or friction factor, dimensionless
g = acceleration due to gravity, m/s^2 (ft/s^2)
h = convective film coefficient, $W/(m^2 \cdot K)$ ($Btu/(h \cdot ft^2 \cdot R)$)
h_L = energy loss in pipe flow, m (ft)
h_{12} = convective coefficient between Medium 1 and Medium 2, $W/(m^2 \cdot K)$ ($Btu/(h \cdot ft^2 \cdot R)$)
h_{34} = convective coefficient between Medium 3 and Medium 4, $W/(m^2 \cdot K)$ ($Btu/(h \cdot ft^2 \cdot R)$)
k = thermal conductivity of material, $W/(m^2 \cdot K)$ ($Btu \cdot ft/(h \cdot ft^2 \cdot R)$)
L = damping length or length of a pipeline, m (ft)
M = mass flow rate, kg/s (lb/h)
n_d = number of particles $\geq x$ downstream of filter, dimensionless
n_u = number of particles $\geq x$ upstream of filter, dimensionless
p = pressure, kPa (psi)
Q = flow rate through the device, m^3/s (gpm)
(For correct units in the SI system, m^3/s is used here; however, it is more common in the hydraulics discipline to use liters per minute (Lpm).)
q = rate of heat flow, W (Btu/h)
q_p = heat generation due to pump inefficiencies, W (Btu/h)
q_1 = heat generation rate, W (Btu/h)
R_i = thermal resistance of system component i, K/W (h·R/Btu)
T_i = temperature of the ith medium, K (R)
t = thickness, m (ft)
U = overall heat transfer coefficient, $W/(m^2 \cdot K)$ ($Btu/(h \cdot ft^2 \cdot R)$)
v = flow velocity, m/s (ft/s)
x = particle size, μm (mil)
β = beta rating, dimensionless
Δp = pressure drop across a device, kPa (psi)
ΔT = temperature difference, K (R)
ΔT_{total} = total temperature difference across which heat is being transferred, K (R)
η_0 = overall pump efficiency, dimensionless
σ = Stefan-Boltzmann constant, 5.669×10^{-8} $W/(m^2 \cdot K^4)$ (0.1714×10^{-8} $Btu/(h \cdot ft^2 \cdot R^4)$)
γ = specific weight, N/m^3 (lb/ft^3)
μ = dynamic or absolute viscosity, Pa·s ($(lb \cdot s)/ft^2$)

2-1 INTRODUCTION

The preceding chapter pointed out that the hydraulic fluid performs a basic function in a hydraulic power or control system and must satisfy numerous requirements to perform adequately in a given circuit. Furthermore, the hydraulic fluid influences the operation of the system components and they in turn affect the performance of the hydraulic fluid. Hence the components of a system cannot be designed or specified independently of the hydraulic fluid, nor can the hydraulic fluid be selected independently of the component design. The hydraulic circuit, which involves both mechanical components and hydraulic fluid, must be designed as an integral system.

This chapter is devoted to a discussion of the mechanical components of the system and their interrelationship with the hydraulic fluid. No attempt is made to provide a comprehensive discussion of equipment design. For this the reader is referred to any one of several works devoted to the subject (Refs. 1, 2, 3, 4, and 5).

To illustrate the manner in which system components are integrated into a hydraulic circuit, consider the circuit shown in Fig. 2-1. This is a rotary liquid motor circuit that produces constant torque. To do so, constant hydraulic pressure must be maintained on the hydraulic motor. This condition is achieved by using a pressure-reducing valve upstream of the motor. Constant pressure could also be obtained by using a pressure-compensated, variable-displacement pump.

The circuit of Fig. 2-1 contains all six of the basic components mentioned in Chapter 1. The pump (a), driven by an

Downloaded from http://www.everyspec.com

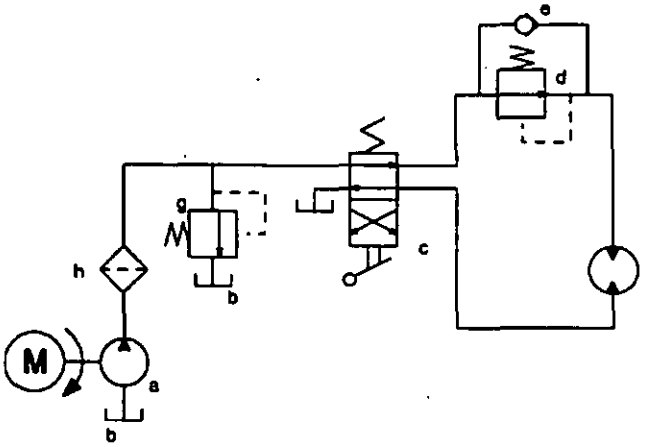

a Hydraulic Pump With Electric Drive Motor
b Reservoir
c Directional Control Valve
d Pressure-Reducing Valve
e Check Valve
f Bidirectional Hydraulic Motor
g Relief Valve
h Filter

Figure 2-1. Typical Hydraulic Motor Circuit

electric motor, serves as the source of fluid energy. The fixed-displacement hydraulic motor (f) converts hydraulic energy into mechanical energy. Hydraulic piping is provided between the system components. Directional controls are provided by the manually actuated control valve (c) and the check valve (e). The pressure-reducing valve (d) and the relief valve (g) provide pressure control. A fluid reservoir (b) serves both for storage and as a system vent location. Less obvious is the hydraulic fluid, without which the system could not perform a single useful function.

NOTE: All symbols used in Fig. 2-1 and throughout this handbook are in accordance with International Organization for Standardization (ISO) 1219 (Ref. 6). Within this chapter the illustrations of components of fluid power systems include the ISO symbol for the component.

2-2 PUMPS

A hydraulic pump is a device used to impart motion to a liquid and thereby convert mechanical energy to hydraulic energy. It provides the force required to transmit power. Pumps are rated in terms of flow and pressure. The flow rating (volumetric output) is the amount of liquid that can be delivered by the pump per unit time at a specified speed. A pump does not produce pressure. The pressure developed at the pump outlet depends on the resistance to flow in the circuit.

Pumps are classified according to their configuration or operating characteristics. One classification lists pumps as rotary or reciprocating. Rotary pumps use a rotating assembly to transfer the fluid from the inlet to the outlet and to impart motion. Rotary pumps can be further classified as gear, vane, piston, or screw pumps. Reciprocating pumps employ a plunger or piston to impart motion to the fluid.

Pumps can also be classified as positive- or nonpositive-displacement devices. Positive-displacement pumps move a definite amount of fluid during each stroke or revolution; they are most frequently used in hydraulic systems. Nonpositive-displacement, or hydrodynamic, pumps provide continuous flow and are primarily low-pressure devices with high volumetric output used for fluid transfer functions.

Positive-displacement pumps can be of either fixed or variable displacement. The output of a fixed-displacement pump is relatively constant at a given pump speed regardless of the system flow resistance (pressure). The output of a variable-displacement pump can be changed by adjusting the geometry of the displacement chamber.

2-2.1 GEAR PUMPS

Gear pumps are the most commonly used pumps for hydraulic systems (Ref. 7). They are available in a wide range of flow and pressure ratings. The drive gear and the driven gear are the only moving parts.

2-2.1.1 External Gear Pumps

In external gear pumps two or more gears mesh with minimum clearance. The unmeshing of the gear teeth at the inlet port causes an increase in the volume of the pumping chamber formed by the gear teeth and the side plates that constrain the gears. This increased volume generates a low pressure at the inlet port and allows fluid to be pushed into the pump housing. The liquid is moved through the pump in the volume between the gear teeth and the housing and is displaced as the teeth mesh on the outlet side.

2-2.1.1.1 Spur Gear Pumps

A spur gear pump is illustrated in Fig. 2-2. The two gears rotate in opposite directions and transfer liquid from the inlet to the outlet through the volume between the teeth and the housing. The output depends on tooth width and depth and is largest for a minimum number of teeth. Involute teeth with a pressure angle of 20 to 30 deg are common in spur gear pumps. However, progressive-contact and edge-contact gears are sometimes used to avoid the severe loads generated by liquid trapped between the contact points of the meshed involute teeth.

Downloaded from http://www.everyspec.com

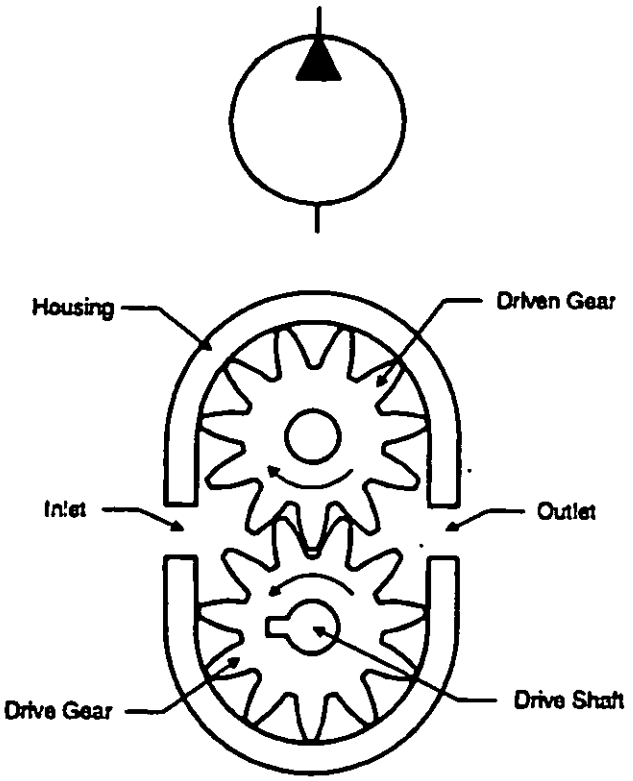

Figure 2-2. Spur Gear Pump

The spur gear pump is a fixed-displacement pump. Output at a given speed decreases slightly with increased pressure due to internal leakage, termed slippage. Typical performance curves are shown in Fig. 2-3. These curves are for a spur gear pump operating with a liquid of constant viscosity. A change in viscosity would shift the capacity curves upward or downward. This viscosity effect illustrates one of the ways in which the liquid influences the specification of system components.

Spur gear pumps are very rugged and therefore are especially suitable for mobile and other applications for which hostile conditions prevail. Operating pressures for spur gear pumps may be up to 20,685 kPa (3000 psi), although some models can be used in 27,580-kPa (4000-psi) systems.

2-2.1.1.2 Helical Gear Pumps

A variation of the spur gear pump is the helical gear pump. The fact that several teeth are engaged simultaneously allows the helical gear pump to carry larger loads at higher speeds than can the spur gear pump. Operation is similar to that of the spur gear pump but with less noise and usually smaller flow pulsations. Because of the helical gear configuration, end thrusts are developed by helical gears. These forces act in opposite directions on the drive and driven gears and require the use of thrust bearings. A helical gear pump is shown in Fig. 2-4.

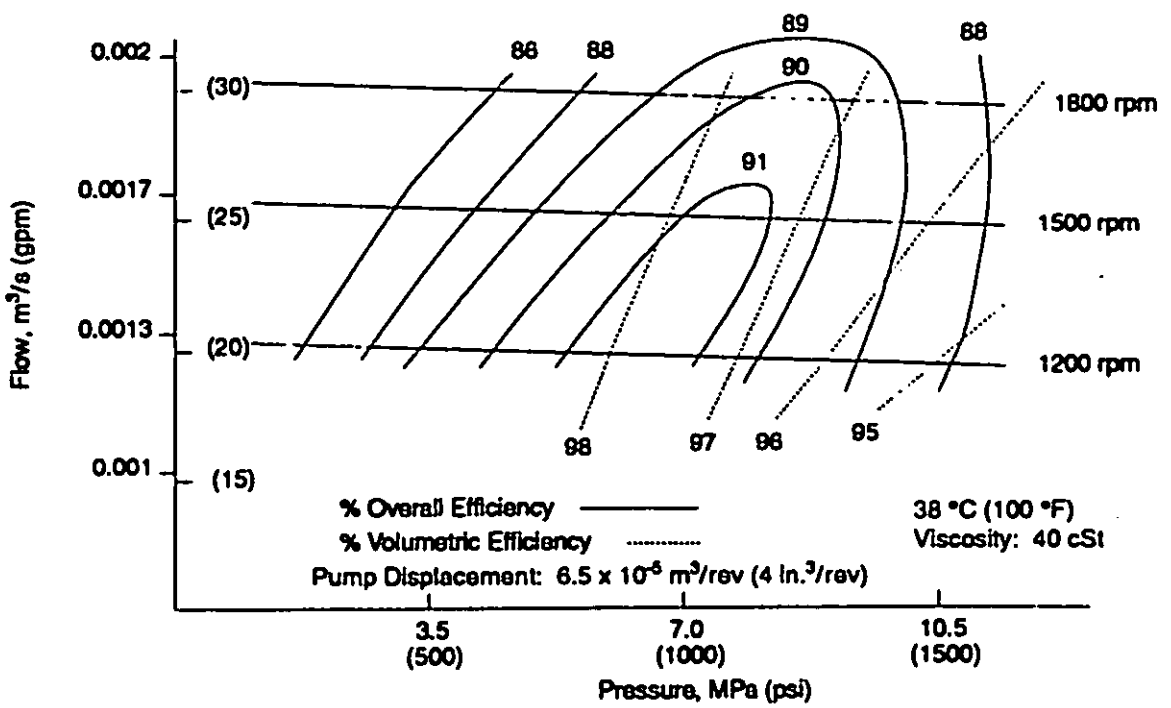

Reprinted from *Hydraulic Pumps and Motors, Selection and Application for Hydraulic Power Control Systems*, p. 12, by courtesy of Marcel Dekker, Inc.

Figure 2-3. Typical Gear Pump Performance Curves (Ref. 8)

Downloaded from http://www.everyspec.com

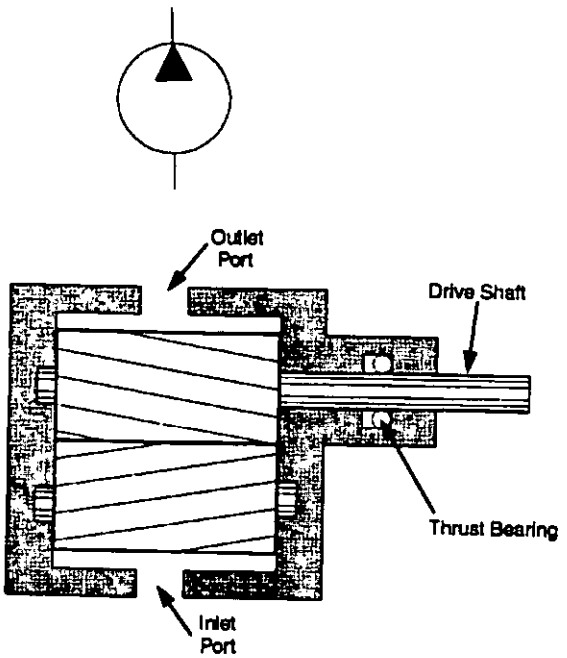

Figure 2-4. Helical Gear Pump

2-2.1.1.3 Herringbone Gear Pumps

Another variation of the external gear pump, shown in Fig. 2-5, incorporates herringbone gears. Like all gear pumps, the herringbone device is a constant-displacement pump. It is generally available for pressures up to about 13,790 kPa (2000 psi), but some models are rated at over 20,685 kPa (3000 psi).

2-2.1.2 Internal Gear Pumps

There are several types of internal gear pumps. The most common of these are the crescent seal pump and the gerotor pump.

2-2.1.2.1 Crescent Seal Pumps

The crescent seal pump consists of an inner and outer gear separated by a crescent-shaped seal, as shown in Fig. 2-6. The gears rotate in the same direction, but the inner gear rotates at a higher speed. The liquid is pushed into the pump at the point where the gear teeth begin to separate and is carried to the outlet in the space between the crescent and the teeth of both gears. The contact point of the gear teeth forms a seal, as does the small tip clearance at the crescent. This pump is generally used for low-output applications at pressures below 6895 kPa (1000 psi).

2-2.1.2.2 Gerotor Pumps

The gerotor pumps, shown in Fig. 2-7, consist of a pair of gears that are always in sliding contact. The larger internal gear has one more tooth than the external gear. Both gears rotate in the same direction. Liquid is drawn into the chamber where the teeth are separating and is ejected when the teeth again start to mesh. The seal is provided by the sliding contact. Gerotor pumps are restricted to low-pressure operation because of the loads generated by the hydraulic unbalance.

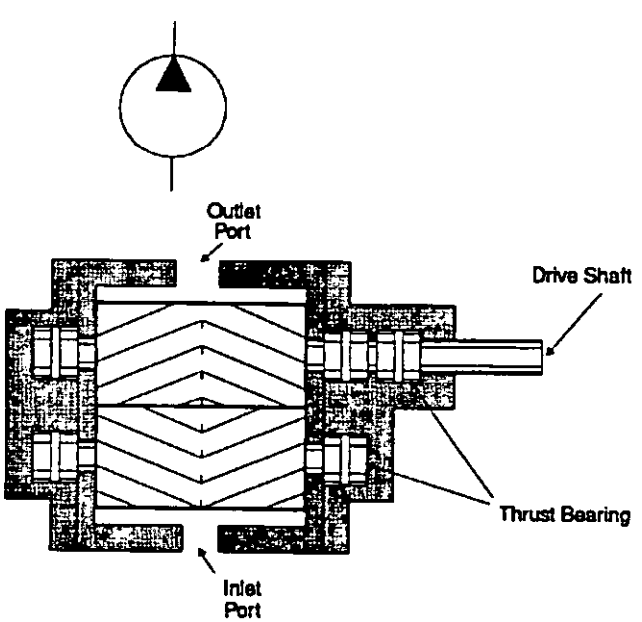

Figure 2-5. Herringbone Gear Pump

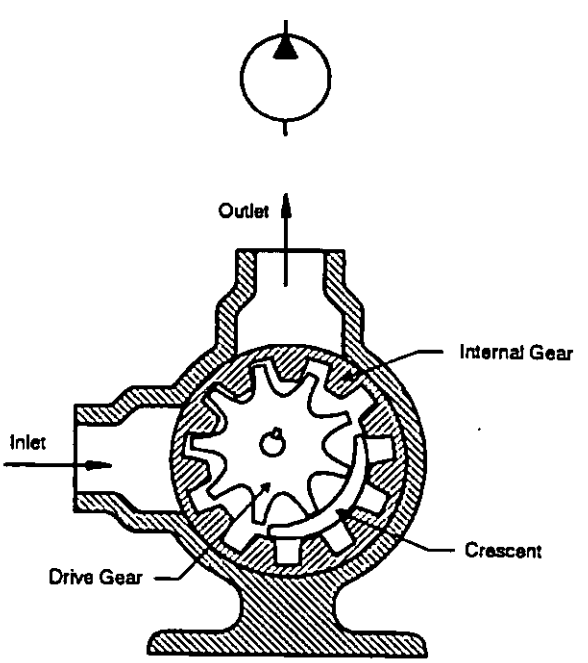

Figure 2-6. Crescent Seal Gear Pump

Downloaded from http://www.everyspec.com

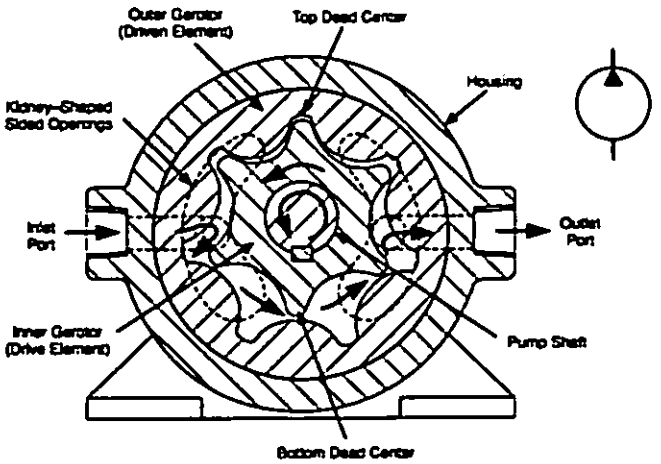

Reprinted with permission. Copyright © by Womack Educational Publications.

Figure 2-7. Gerotor Pump (Ref. 9)

2-2.2 VANE PUMPS

Vane pumps consist of a rotor mounted in a cam-shaped housing. The rotor is provided with radial slots, which accommodate vanes. As the internal assembly rotates, the vanes are forced radially outward against the housing by centrifugal force sometimes assisted by springs. Vane pumps can operate at speeds up to 2000 rpm and are available in pressure ratings to 17,238 kPa (2500 psi). Their simple construction results in a high degree of reliability and easy maintenance. They are relatively low in cost and exhibit a long operating life partially because vane wear is accommodated by the radial motion of the vanes. These pumps have comparatively high volumetric and overall efficiencies and are available in a wide range of output ratings.

Operating limitations of vane pumps are imposed by vane-tip speed, bearing loads, and cavitation. The force exerted by the vanes against the housing can be controlled by using dual vanes, i.e., two vanes in each slot. Each of the dual vanes has a smaller contact area than a single vane. The dual vane design also provides a better seal between the vanes and the housing.

Vane pumps exhibit good tolerance to liquid contamination. They are generally used with petroleum-base or military specification hydraulic fluids in mobile operations and with petroleum or fire-resistant hydraulic fluids in stationary applications. Discharge pulsations can sometimes constitute a problem if high response is desired.

2-2.2.1 Unbalanced Vane Pumps

In the unbalanced vane pump the rotor and cam housing are eccentric, as shown in Fig. 2-8. The pump suction is generated in the region in which the vanes begin to move outward. The liquid is carried around the rotor by the vanes, which form a seal with the housing and the end plates, and it is discharged as the vanes are forced back into the rotor slots by the eccentric housing.

Unbalanced vane pumps can be either fixed- or variable-displacement pumps. In the fixed-displacement pump the rotor-housing eccentricity is constant, and hence the displacement volume is fixed. A constant volume of fluid is discharged during each revolution of the rotor. Variable displacement can be provided if the housing can be moved with respect to the rotor. This movement changes the eccentricity and, therefore, the displacement. Refer to Fig. 2-9.

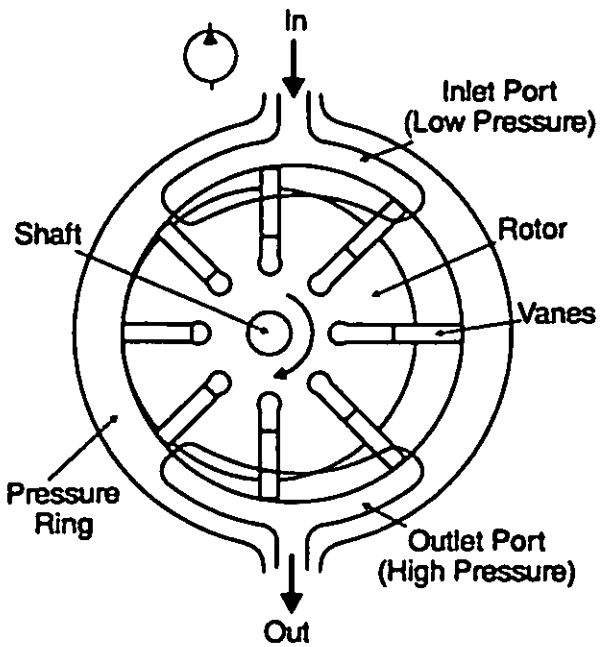

Figure 2-8. Unbalanced Vane Pump

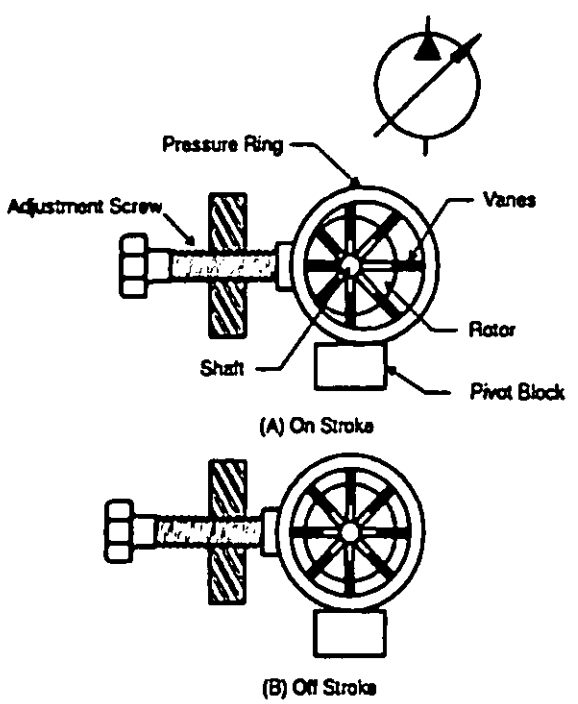

Figure 2-9. Variable-Displacement Vane Pump

Downloaded from http://www.everyspec.com

In addition to sliding vanes, rolling vanes and swinging vanes are also available in unbalanced vane pumps. Each of these variations is hydrostatically unbalanced. This unbalance causes high bearing loads and generally limits the application of unbalanced vane pumps to operating pressures less than about 13,790 kPa (2000 psi).

2-2.2.2 Balanced Vane Pumps

Hydraulic balance is achieved in the balanced vane pump in which the rotor is in an elliptic housing, as shown in Fig. 2-10. This configuration creates two diametrically opposed displacement volumes. The two high-pressure zones balance the forces on the rotor shaft. In many such units no springs are provided to assist the outward motion of the vanes. This condition restricts operation to speeds above a minimum at which the centrifugal force is sufficient to hold the vanes against the housing. Other designs use springs for start-up and low-speed operation. Balanced vane pumps are necessarily fixed-displacement machines. Typical performance curves for an unbalanced vane pump are shown in Fig. 2-11.

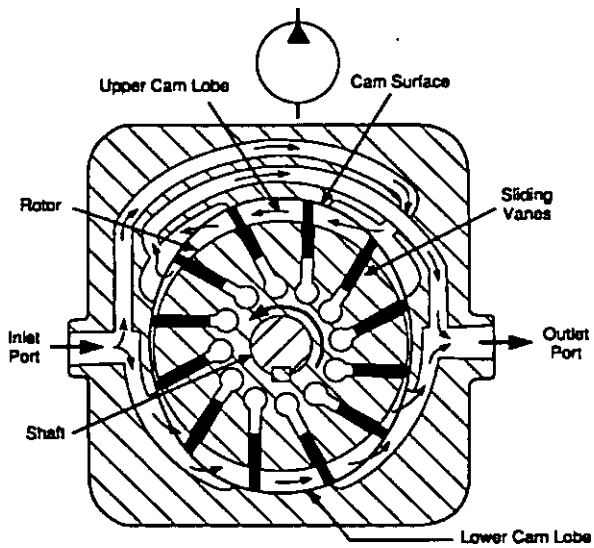

Reprinted with permission. Copyright © by Womack Educational Publications.

Figure 2-10. Balanced Vane Pump (Ref. 9)

2-2.3 PISTON PUMPS

The applications for which the piston pump is well-suited are determined by its two principal advantages—high-pressure capability and high volumetric efficiency. In addition, the piston pump can operate at speeds over 2000 rpm; is available in a wide range of output ratings; and provides a compact, lightweight unit for high-power applications, a low noise level when the flow path is linear, and better system economy in the higher power ranges (above 15 kW (20 hp)).

Piston pumps are classified by the motion of the piston relative to the drive shaft. There are three categories—axial, radial, or rotating.

2-2.3.1 Axial Piston Pumps

In the axial piston pump, rotary shaft motion is converted into an axial reciprocating motion, which drives the pistons within the cylinder barrel. There are two pump configurations that fall in the axial piston pump category—the in-line piston pump and the bent axis piston pump.

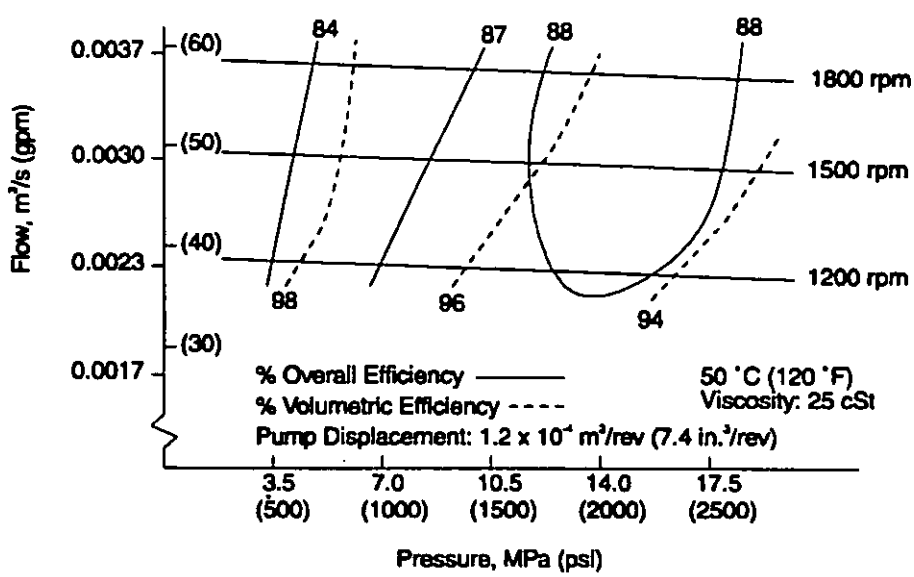

Reprinted from *Hydraulic Pumps and Motors, Selection and Application for Hydraulic Power Control Systems*, p. 26, by courtesy of Marcel Dekker, Inc.

Figure 2-11. Typical Balanced Vane Pump Performance Curves (Ref. 8)

Downloaded from http://www.everyspec.com

In the in-line pump, shown in Fig. 2-12, the motion conversion is accomplished through piston shoes that ride on the thrust cam, or swash plate, mounted on the drive shaft. These pumps are multipiston designs that use either port plates or check valves to direct flow from the inlet port into the pistons and from the pistons to the outlet port.

As the pistons reciprocate, the volume of the pumping chamber in the cylinder barrel alternately increases and decreases. The increasing volume occurs as the piston passes the inlet port, whereas the decreasing volume occurs as the piston passes the outlet port.

The increasing volume creates a low pressure (partial vacuum) that allows fluid to be pushed into the chamber from the inlet port. As the volume decreases, the fluid is forced from the chamber into the system piping through the outlet port.

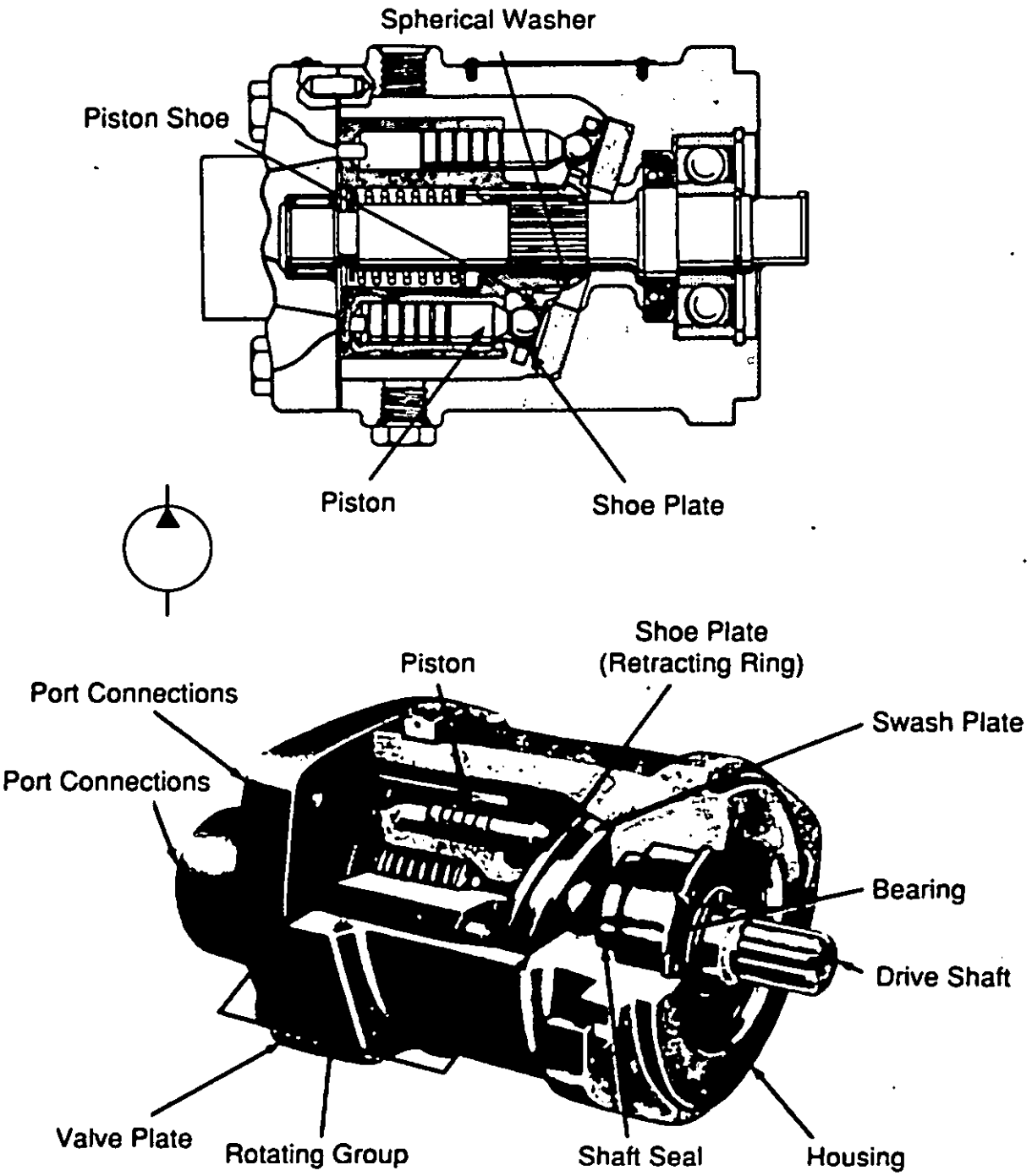

Courtesy of Vickers, Inc.

Figure 2-12. Axial Piston Pump (Ref. 5)

Downloaded from http://www.everyspec.com

The bent axis piston pump, shown in Fig. 2-13, achieves piston reciprocation by using a cylinder barrel and piston unit that is set at an angle to the drive shaft. A universal link connects the drive shaft to the cylinder block. The pistons are connected to the drive shaft flange by similar universal links so that the pistons reciprocate within the cylinder block as the entire unit rotates.

Axial piston pumps—both in-line and bent axis—are available as either fixed-displacement or variable-displacement units. A fixed-displacement pump has a constant, non-adjustable fluid displacement that gives a constant flow rate at a constant shaft speed. Variable-displacement pumps, on the other hand, are designed so that the displacement can be varied to produce different flow rates at a constant shaft speed. In the in-line pump, this is accomplished by changing the angle of the swash plate relative to the drive shaft. Decreasing the angle reduces the piston stroke and, consequently, the pump displacement. This result is achieved in the bent axis pump by varying the angle between the drive shaft and the cylinder barrel.

The degree to which the displacement can be varied depends on the design of the pump. Most variable-displacement pumps can be adjusted through a range of values between some minimum and maximum settings. Thus the flow rate is adjustable, but the direction of flow through the pump is always the same. For certain applications, e.g., hydrostatic transmissions, discussed in par. 2-4.3, however, there is a requirement to reverse the flow direction through the pump. This change of direction is accomplished by adjusting the relative angle through a range on either side of the null, or zero, displacement position. As the pumping mechanism goes "overcenter", the inlet and outlet ports are reversed because the direction of travel of the pistons in the cylinder barrel is reversed relative to the port locations. Thus the flow direction through the pump is reversed, although the pump shaft is still rotating in the same direction. Such pumps are termed overcenter, or reversible, pumps. A reversible bent axis pump is shown in Fig. 2-14.

Pump displacement can be adjusted in several ways. The most common method uses either a screw mechanism or a lever to adjust the relative angle. If rapid, accurate adjustments are required, a servomechanism can be used that compares a command signal and a feedback signal and adjusts the pump displacement to correct automatically and continuously any flow-related discrepancies in the performance of the system. A third way to vary the displacement is through a pressure-sensing device termed a pressure compensator.

A pressure compensator is a control mechanism that adjusts the swash plate or bent axis angle by balancing system pressure (usually sensed at the discharge port of the pump) against either a spring or a biasing piston. The purpose of the compensator is to maintain system pressure while modulating the pump displacement so that only enough flow is produced to make up any system demand or leakage. During normal system operations, the system pressure is below the compensator setting, and the pump is producing its full-rated flow. When the system pressure reaches 95 to 97% of the compensator set point, the compensator begins to exert a force on the adjustable swash plate mechanism (the yoke) to reduce the relative angle. At the compen-

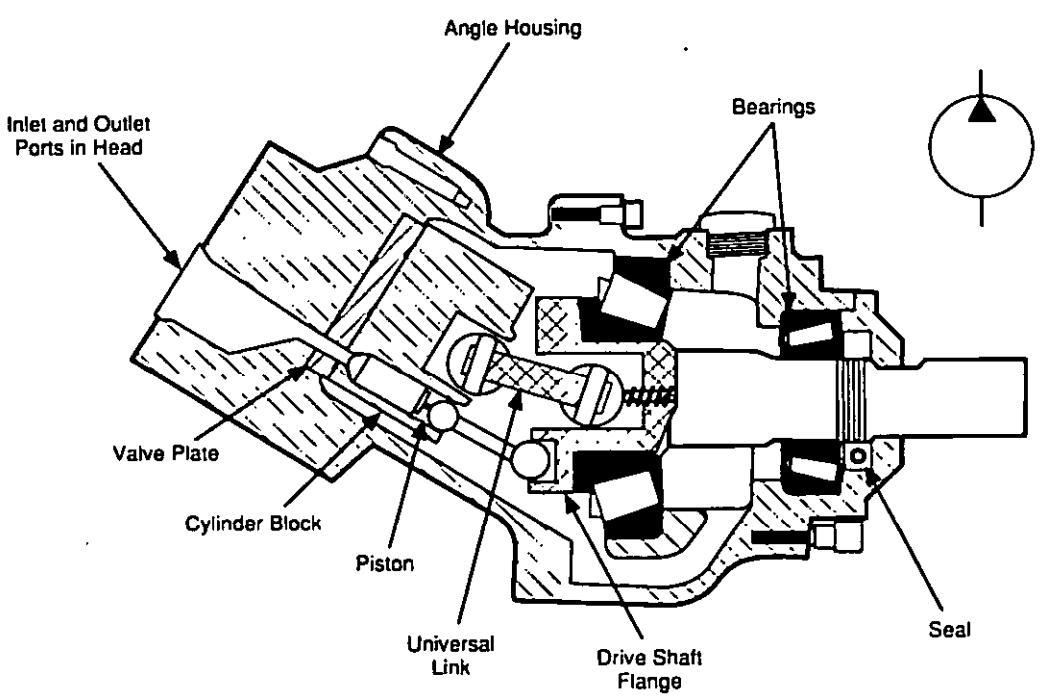

Courtesy of Vickers, Inc.

Figure 2-13. Bent Axis Piston Pump (Ref. 5)

Downloaded from http://www.everyspec.com

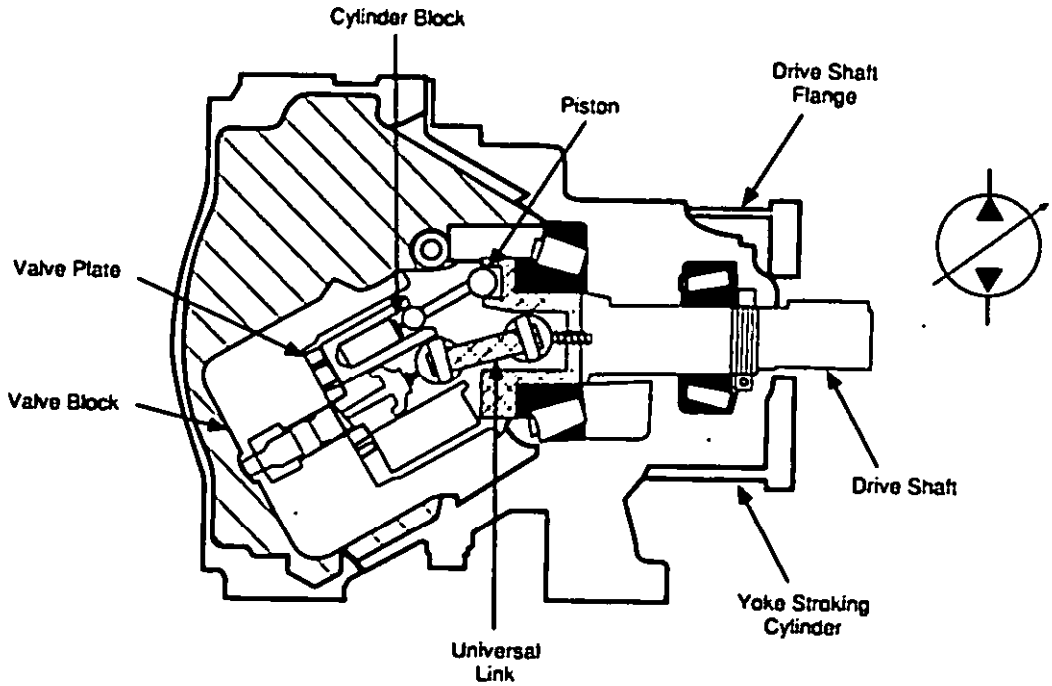

Courtesy of Vickers, Inc.

Figure 2-14. Reversible, Variable-Displacement, Bent Axis Piston Pump (Ref. 5)

sator set point the minimum angle is reached. Due to many considerations (primarily cooling and lubrication), this angle is normally not exactly zero, so a small amount of flow is always produced. Fig. 2-15 shows a typical pressure-compensated pump pressure-flow profile. It is generally recommended that these pumps not be operated in the fully compensated (deadhead) position for long periods of time because of the high amount of heat generated in this condition. Pressure-compensated pumps do not eliminate the need for a pressure relief valve because the relief valve will provide system protection if the pump compensator fails.

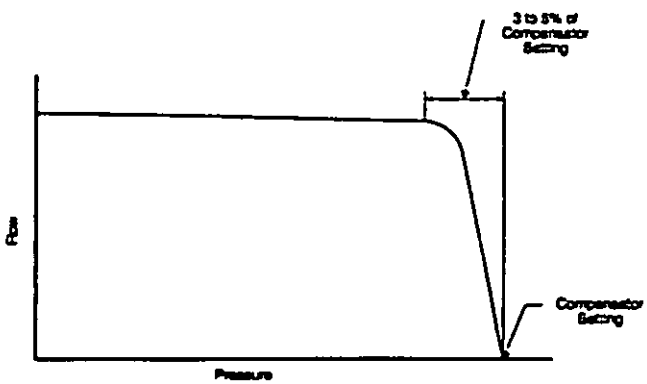

Figure 2-15. Pressure-Compensated Pump Profile

Axial piston pumps are available for flow rates up to 6.3×10^{-3} m^3/s (100 gpm) and pressures to 69,000 kPa (10,000 psi). They are favored for aerospace applications because of their high power-to-weight ratios, high-pressure capabilities, and high efficiencies.

2-2.3.2 Radial Piston Pumps

There are two basic design concepts employed for radial piston pumps. Fig. 2-16 is a pump that uses stationary pistons operated by an eccentric cam that is part of the shaft. Oil enters and leaves the pistons through check valves that direct the flow to the piston as the piston retracts and to the pressure manifold as the piston is pushed outward by the cam.

In the pump of Fig. 2-17, the cylinder block is keyed to the shaft, and the entire cylinder block with its pistons rotates inside the reaction ring. Centrifugal force causes the pistons to move outward and follow the reaction ring. The reciprocation of the pistons is caused by the eccentricity of the reaction ring. Fluid enters and leaves the pistons through the inlet and outlet ports in the pintle area. The pintle is stationary and does not rotate with the pump mechanism. The pump shown in this figure is a variable-displacement unit. The handwheel is used to adjust the displacement by changing the position of the cam ring in relation to the cylinder block.

Downloaded from http://www.everyspec.com

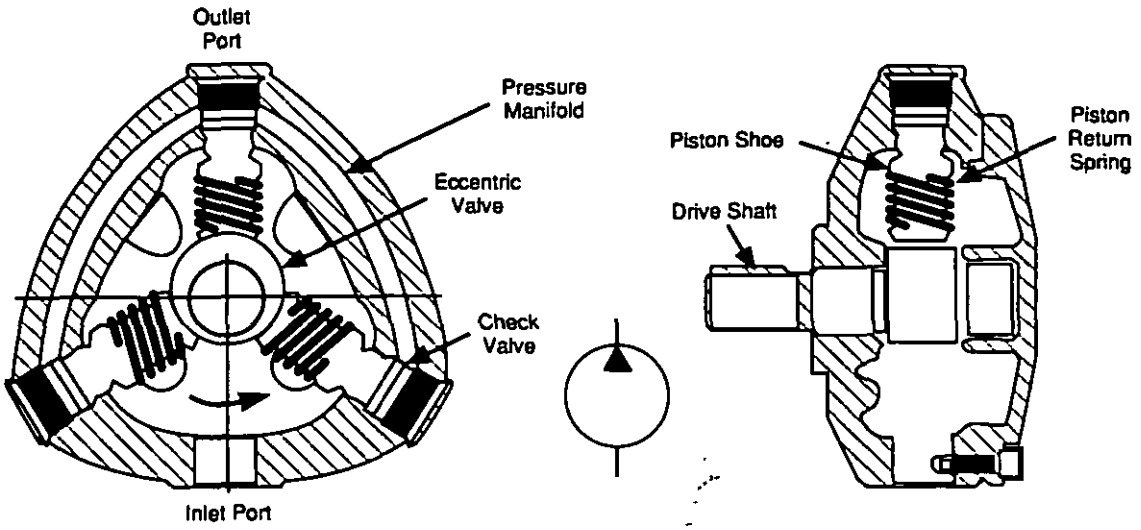

Reprinted with permission. Copyright © by Womack Educational Publications.

Figure 2-16. Radial Piston Check Valve Pump (Ref. 9)

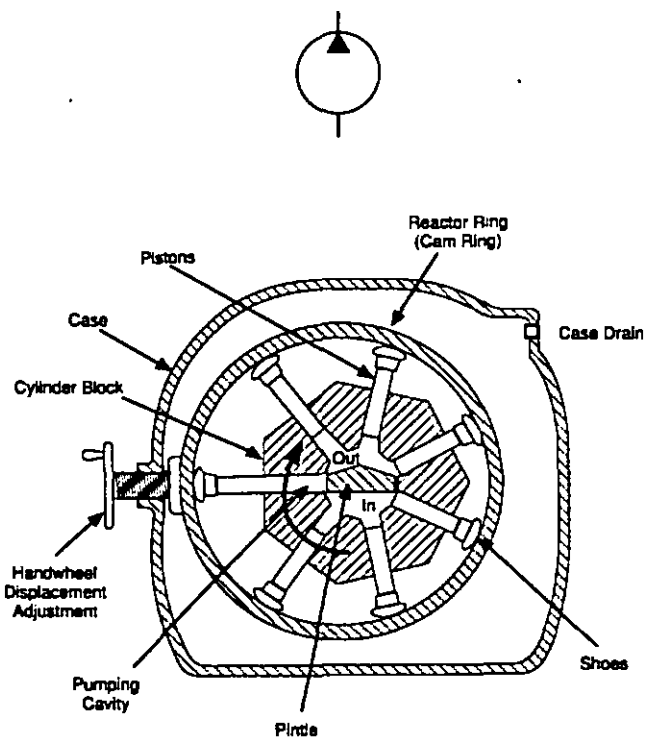

Reproduced by permission of Deere & Company, copyright © 1987, Deere & Company. All rights reserved.

Figure 2-17. Radial Piston Pump (Ref. 10)

2-2.3.3 Rotating Piston Pumps

The rotating piston pump (sometimes called the rotary abutment pump) has three parallel synchronous shafts that are attached to the two rotating pistons P_1 and P_2 and the rotating abutment shown in Fig. 2-18. Piston rotors are mounted on the outside shafts and seal dynamically against the cylindrical housing. The rotor mounted on the center shaft forms an abutment valve. The rims of the piston rotors pass through a bucket cut in the center rotor. A rolling contact seal is maintained between the rotors, except when the rim is meshed with the abutment valve. Liquid enters the chamber occupied by piston P_1, as shown in Fig. 2-18. It is pumped through to the left chamber and discharged by piston P_2. Pumps of this type are available with ratings to over 9.5×10^{-3} m^3/s (150 gpm) at 10,300 kPa (1500 psi).

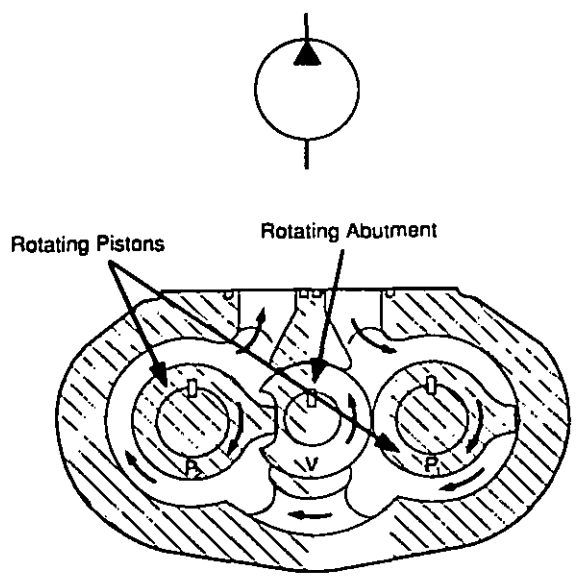

Courtesy of Mobile Fluid Products Division, Dana Corporation.

Figure 2-18. Rotating Piston Pump (Ref. 11)

Downloaded from http://www.everyspec.com

2-2.4 SCREW PUMPS

A screw pump is an axial-flow gear pump. Fig. 2-19(A) shows a two-rotor screw pump, and a three-rotor screw pump is depicted in Fig. 2-19(B). Both use helical gears. Liquid is introduced into the screws at the two ends and is discharged at the center. The seal is formed by the contact of the two gears at the intersection of their addenda and by the small clearance between the gears and the pump housing. In pumps employing double helical gears, as shown in Fig. 2-19(A), the thrust loads are balanced. This design is frequently employed in large pumps. Screw pumps are especially applicable where quiet operation is essential. In screw pumps, the gears must be in contact at the intersection of their addenda. This contact plus the minimum clearance at the outside diameter of the gears provides a series of sealed chambers along the length of the screws. Screw pumps can also be arranged with three rotors, as seen in Fig. 2-19(B). The center gear is the driver, and no timing gears are necessary.

2-3 CONNECTION BETWEEN PUMP AND DRIVE MOTOR

The physical connection between the hydraulic pump and its drive motor is not technically a hydraulic component. It is, however, an important part of the hydraulic system and in many cases may be the weakest link in the power train. There are a number of methods for coupling the drive motor output shaft to the hydraulic pump input shaft. Some of the more common methods are keys and pins, flexible couplings, universal joints, clutches, and splines.

The most frequently used connector in mobile hydraulic applications is the spline. For these applications splined pump shafts normally conform to Society of Automotive Engineers (SAE) Standard J744 (Ref. 12). Splines offer the advantage of being able to transmit the maximum load with the smallest coupling diameter. In addition, they are self-centering, tend to distribute the load equally, and are simple to manufacture with standard gear-cutting equipment. Their major disadvantage is the problem of wear. Even the best-designed splines are subject to relative motion of the parts and are difficult to lubricate.

In industrial applications flexible couplings similar to those shown in Fig. 2-20 are commonly used. The most widely used configurations of these couplings consist of two castellated metal sections (one for the pump shaft and one for the electric motor shaft) and an interconnecting, hard rubber piece that is inserted between the metal pieces and locked into the castellations. This type of coupling is shown in Fig. 2-20(A). These couplings help to prevent the transmission of axial thrust from the pump to the electric motor. They also compensate for small changes of alignment during normal operation.

There are two methods for mounting the pump to the drive unit—flange mounting and foot mounting. In the first of these the mounting flange is integral with the front face of the pump assembly. There are standard two-bolt and four-bolt configurations for these flanges, which are shown in Fig. 2-21. These allow the pump to be bolted directly to a mounting surface on a gear box or power takeoff unit or to a rigid bell mount on an electric motor. Flange mounting provides both a rigid assembly and accurate shaft alignment. There are several standard flange mount sizes and configurations. These, along with standard nonsplined shaft sizes and configurations, are included in SAE J744 (Ref. 13).

Foot mounting usually employs an L-shaped bracket to support the pump. The bracket may be an integral part of the pump front face assembly, or it may be a separate unit machined to accept a standard flange mount. Foot mounts

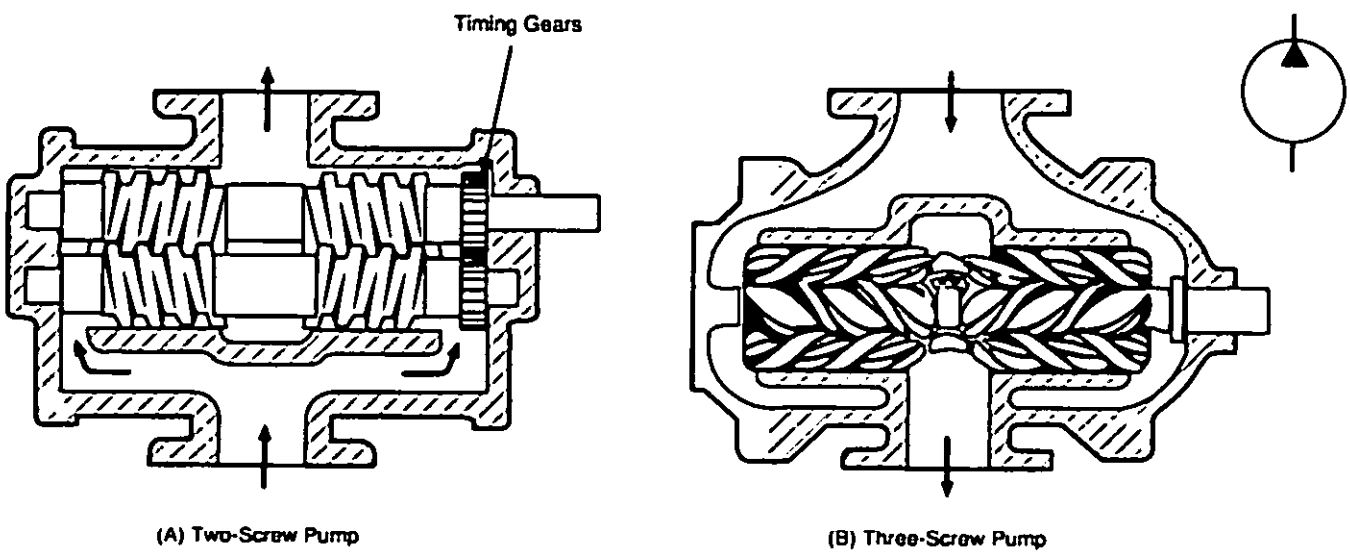

Reprinted with permission. Copyright © by IMO Pump Division, IMO Industries, Inc.

Figure 2-19. Screw Pumps (Ref. 12)

Downloaded from http://www.everyspec.com

frequently lack sufficient rigidity to prevent bending when the pump experiences rapid shock loading. Precise shaft alignment may also be a problem when using foot mounts.

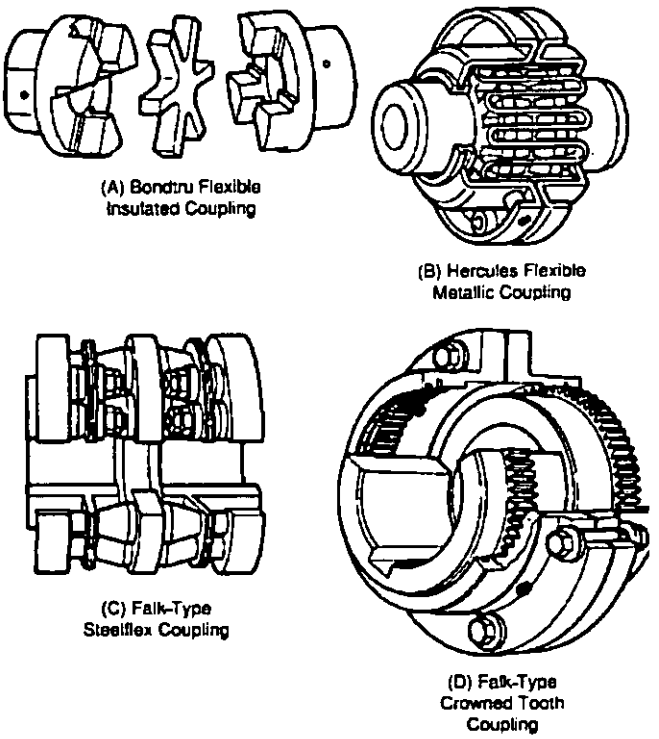

Courtesy of Vickers, Inc.

Figure 2-20. Flexible Couplings (Ref. 5)

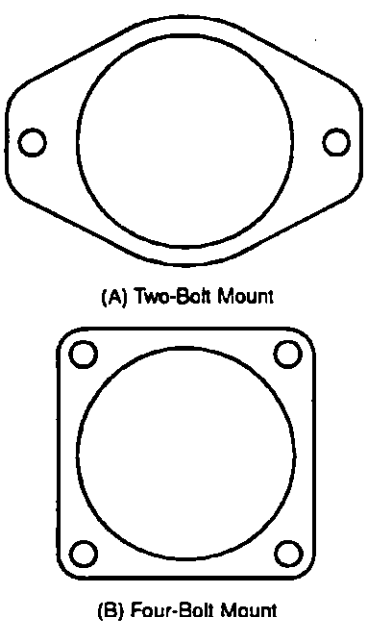

Figure 2-21. Standard SAE Flange Mount Configuration for Hydraulic Pumps

2-4 ACTUATORS

An actuator is a device used to convert hydraulic energy to mechanical energy; thus it has a function opposite that of a pump. An actuator, or fluid motor, can be used to produce linear, rotary, or oscillatory motion.

2-4.1 LINEAR ACTUATORS

A linear actuator, or hydraulic cylinder, is a fluid motor that generates linear motion. Various types are widely used in hydraulic systems because of their high force capability, ease of speed control, and high power output for a given size and weight. They are especially suitable for control systems due to their high mechanical stiffness and speed of response.

2-4.1.1 Classification of Linear Actuators

The many types of linear actuators which are available give rise to several criteria for classification. The criteria for classification are discussed in the subparagraphs that follow.

2-4.1.1.1 Rotating

In a rotating actuator (also referred to as a rotating linear actuator) the rod and piston are designed to provide rotary as well as linear motion. In many applications, such as rotary machine tools, this feature is necessary to allow unrestricted motion of the piston rod. Such an actuator is illustrated in Fig. 2-22.

This type of actuator is actually a two-part device—a standard hydraulic cylinder coupled to a rack and pinion device to provide the rotation. Linear motion of the rod results when Port 1 or Port 2 is pressurized. Pressurizing either Port 3 or Port 4 causes rotary motion by moving the spline bar and rotating the pinion gear.

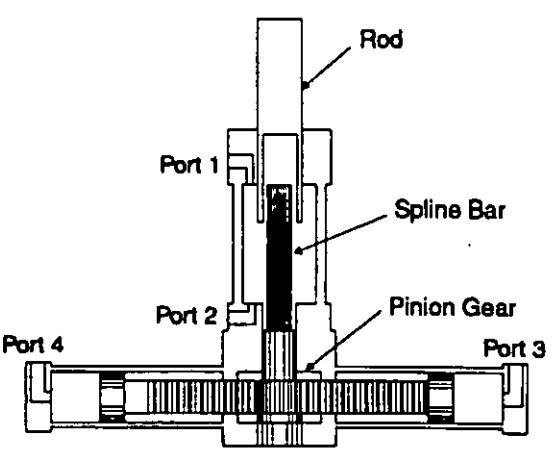

PHD, Inc., Fort Wayne, IN.

Figure 2-22. Rotating Linear Actuator (Ref. 14)

Downloaded from http://www.everyspec.com

2-4.1.1.2 Nonrotating

Nonrotating linear actuators are not intended to rotate, although many can rotate because they have no provision to preclude rotation. If incidental rotation cannot be tolerated, special design features may be required. These antirotation features include square or oval rods and guide pins through the piston.

2-4.1.1.3 Piston or Plunger

The piston and rod assembly in a piston-type linear actuator divides the cylinder volume into two separate chambers. The piston and its attached sealing devices provide the seal between the two chambers. The actuator shown in Fig. 2-23 is a piston actuator.

In a plunger-type actuator there is no piston. The end of the plunger serves as the working face, as seen in Fig. 2-24. The only seal provided is at the point the plunger passes through the end of the cylinder. An external force is required to move the plunger into the cylinder. This cylinder type is often referred to as a ram.

2-4.1.1.4 Rod Classification

Linear actuators can also be classified by rod type. A cylinder with one piston rod is termed a single-ended actuator. The actuators shown in Figs. 2-23 and 2-24 are single-ended actuators. A double-ended actuator has piston rods extending from both ends of the cylinder. A telescoping rod, shown in Fig. 2-25, consists of a series of nested rods, which provide a long extension. Such rods are useful for applications requiring a long stroke but with only limited space available for the unextended rod. A positional rod is used where the stroke is split into two or more portions. The cylinder can be actuated to any one of the positions.

2-4.1.1.5 Cylinder Action

The type of cylinder action is important in the specification of linear actuators. An actuator can be single acting or double acting. The single-acting type can move the piston rod in only one direction by the application of hydraulic pressure. Springs, external forces, or a combination of both can be used to assist return of the piston rod or plunger. A plunger-type actuator, discussed in subpar. 2-4.1.1.3, is a

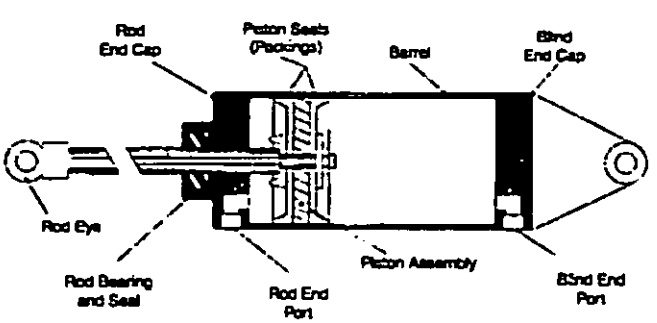

Reprinted with permission. Copyright © by Womack Educational Publications.

Figure 2-23. Hydraulic Piston Actuator (Ref. 9)

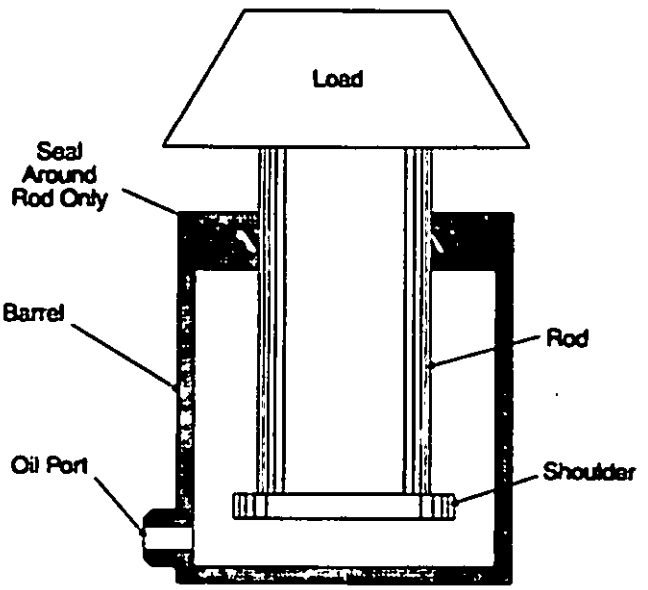

Reprinted with permission. Copyright © by Womack Educational Publications.

Figure 2-24. Hydraulic Ram (Ref. 9)

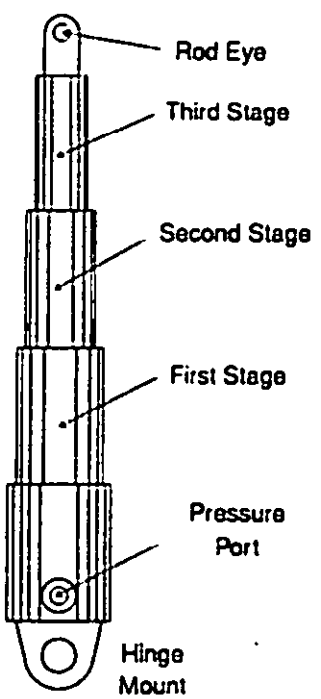

Reprinted with permission. Copyright © by Womack Educational Publications.

Figure 2-25. Telescoping Cylinder (Ref. 9)

Downloaded from http://www.everyspec.com

single-acting actuator. In the double-acting actuator liquid pressure can be applied to either side of the piston and thereby provide a hydraulic force in both directions. This type of cylinder is shown in Fig. 2-26.

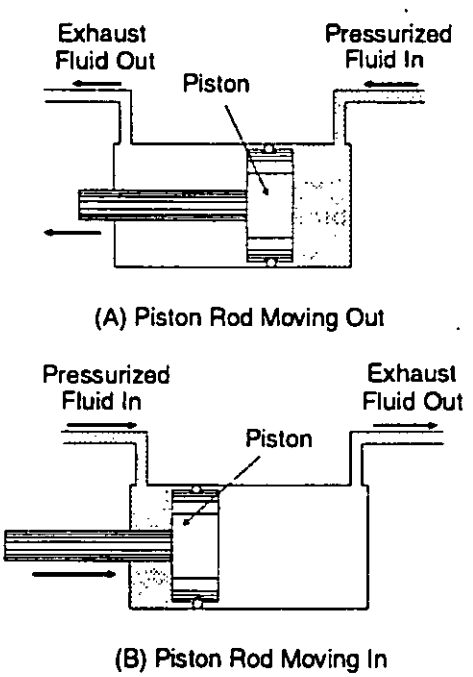

Reprinted with permission. Copyright © by Womack Educational Publications.

Figure 2-26. Double-Acting Cylinder Operation (Ref. 9)

2-4.1.1.6 Single, Tandem, and Dual Actuators

Another means of actuator classification is its assembly. Assemblies of actuators can be designed to obtain various types of cylinder operation. The cylinders discussed to this point have been single actuators. A tandem actuator is one in which two or more piston and rod combinations are assembled as a rigid unit with all pistons mounted on a single rod. Fig. 2-27 shows a tandem actuator with two pistons. Tandem pistons can provide a large working area (and thus large forces for a given pressure) for a small cylinder diameter. The piston and rod assemblies of the dual actuator, shown in Fig. 2-28, are not fastened together as in the tandem actuator. In most dual actuator designs a given piston acts on another only in one direction. Tandem and dual actuators are frequently used in hydropneumatic systems in which air is used as the power source and a hydraulic fluid is used for control.

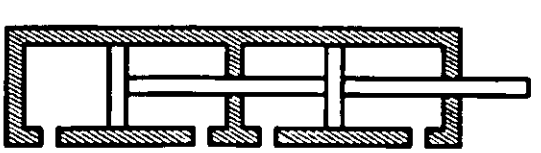

Figure 2-27. Tandem Linear Actuator

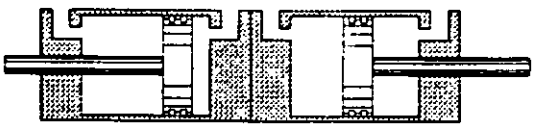

Figure 2-28. Dual Actuator

2-4.1.1.7 Cushioned or Noncushioned Type

No provision is made in noncushioned actuators for controlled acceleration or deceleration of the piston assembly. Therefore, such units have speed and inertial limitations imposed at both ends of the stroke. Cushioned actuators are designed to enable the kinetic energy of the moving piston to be absorbed at the ends of the stroke and thereby reduce peak pressures and forces. Cushioning can be accomplished by blocking the primary discharge ports as the piston nears the end of the stroke, as seen in Fig. 2-29. A cushion spear attached to the piston enters a cushion cylinder and then blocks the discharge port and traps liquid beneath the piston. This liquid assists in the deceleration of the piston as it approaches the cylinder head. A check valve allows fluid to flow back into the cylinder at the start of the return stroke. The rate of piston deceleration can be controlled by designing the cushion plunger with a proper taper. This taper then permits a gradual closing of the discharge ports.

2-4.1.2 Mounting Configuration

One of the advantageous features of linear actuators is the variety of ways in which they can be mounted in a system. Several mounting arrangements are illustrated in Fig. 2-30.

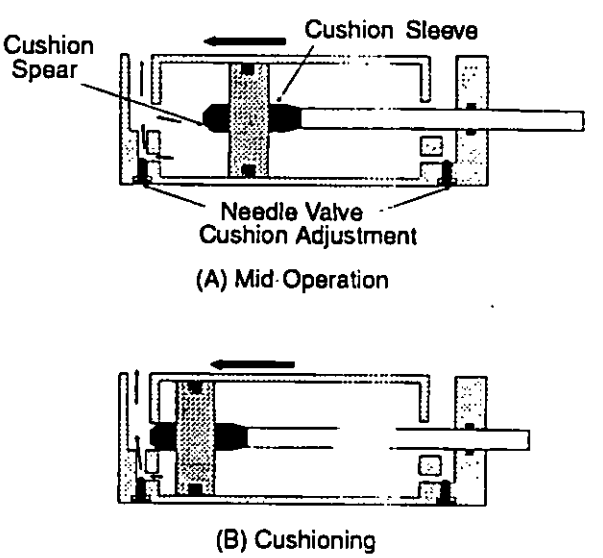

Figure 2-29. Cushioned Cylinder

Downloaded from http://www.everyspec.com

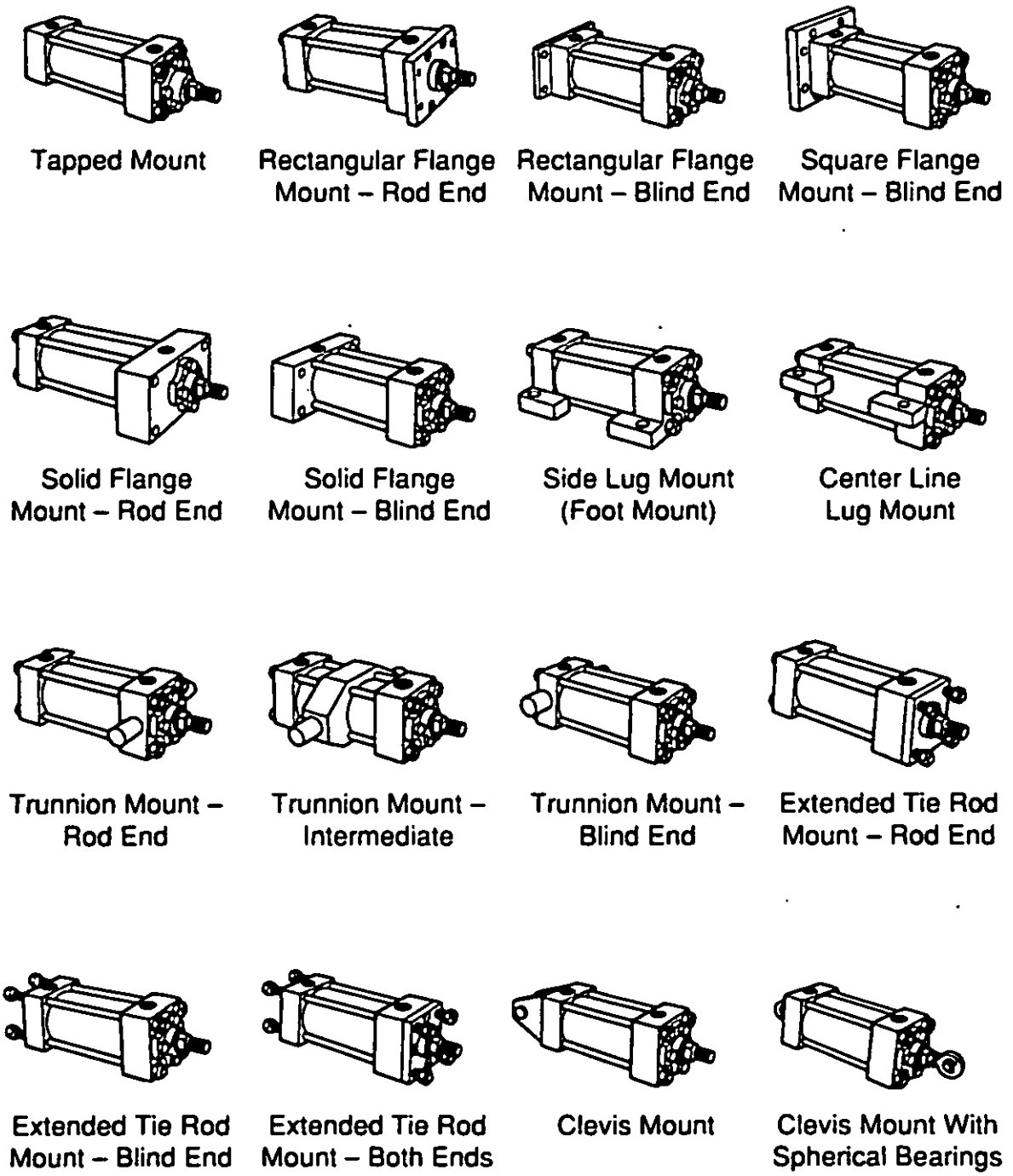

Courtesy of Vickers, Inc.

Figure 2-30. Cylinder Mounting Options (Ref. 5)

Downloaded from http://www.everyspec.com

2-4.1.3 Kinematics of Linear Actuators

The nature of the force provided by a linear actuator depends on the kinematic linkage between the straight-line output of the cylinder and the point at which the force and motion are used. Because of the many alternatives in the design of the linkage, the linear actuator can be used to produce rotary or oscillatory motion as well as linear motion. The resultant versatility of linear actuators is partially illustrated by the applications shown in Fig. 2-31.

2-4.2 ROTARY ACTUATORS OR MOTORS

As in the case of a linear actuator, the function of a rotary actuator, or rotary fluid motor, is to convert hydraulic energy into mechanical energy. Rotary motors are usually rated in terms of the theoretical torque developed per 689.5 kPa (100 psi) of inlet or differential pressure. The actual running torque and the stalled torque may be from 60 to 90% of the theoretical torque, depending on the type of motor. The running volumetric efficiency may vary from about 75 to 95%, again depending on the particular motor. The highest operating efficiency occurs near the rated torque and speed.

The desirable features of the various types of rotary hydraulic motors include

1. The ability to start, stop, and reverse suddenly without motor damage
2. The ability to operate as a pump for braking
3. A higher power-to-weight ratio than any other conventional power source
4. An infinitely variable speed range
5. The ability to accommodate contaminants in the fluid.

Viewed in their greatest simplicity, rotary fluid motors are essentially rotary pumps operating in reverse. The mechanical characteristics of a particular rotary motor are nearly identical to those of the corresponding pump.

2-4.2.1 Gear Motors

Gear motors, like gear pumps, can be classified as external or internal gear units. Also like gear pumps, they are fixed-displacement devices. External gear motors include the gear-on-gear units such as the spur gear motor. Internal gear motors include the crescent seal types and the gerotor-type unit. These gear motors are discussed in the paragraphs that follow.

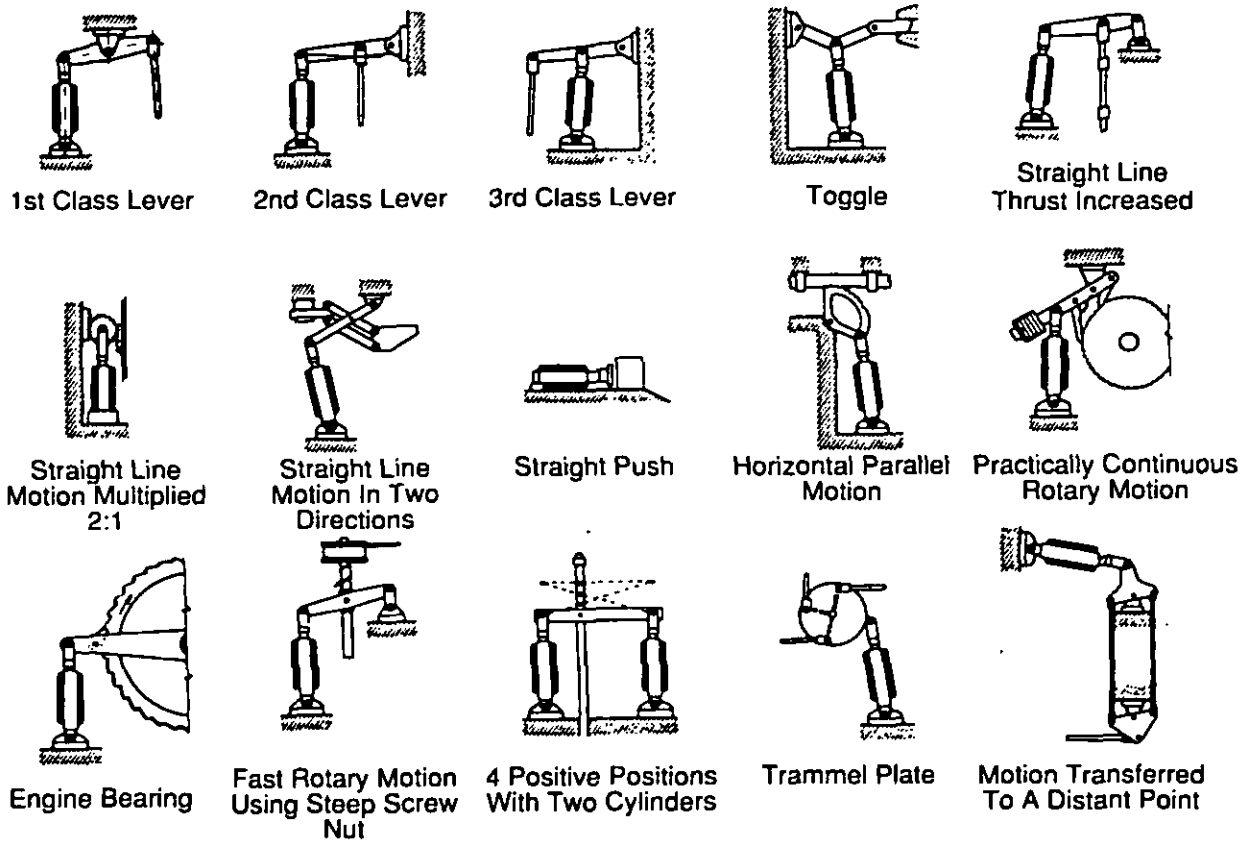

Illustration courtesy of Parker Hannifin Corp.

Figure 2-31. Applications of Linear Actuators (Ref. 28)

Downloaded from http://www.everyspec.com

2-4.2.1.1 Gear-on-Gear Motors

In the gear-on-gear motor rotary motion is produced by the unbalanced hydraulic forces on the gear teeth, which are exposed to the inlet pressure. An example is the spur gear motor; this motor has the same mechanical features as the spur gear pump shown in Fig. 2-2. These units are applicable for peak operating pressures up to about 10,340 kPa (1500 psi) and are available with rated capacities up to 0.0076 m^3/s (120 gpm), maximum speeds of about 3000 rpm, and power ratings up to approximately 37 kW (50 hp). Bearing loads generated by the hydraulic unbalance are high, e.g., unbalanced gear pumps. Typical performance curves for spur gear motors are given in Fig. 2-32.

2-4.2.1.2 Crescent Seal Motors

The crescent seal motor employs an inner and outer gear with a crescent-shaped seal to separate the teeth during part of the revolution. Its operational features are the reverse of those of the crescent seal pump illustrated in Fig. 2-6. Motor units of this type are suitable for high-speed, low-power operations at low-to-moderate pressure. Starting torque and running efficiencies are low. Typical performance curves for crescent seal motors are shown in Fig. 2-33.

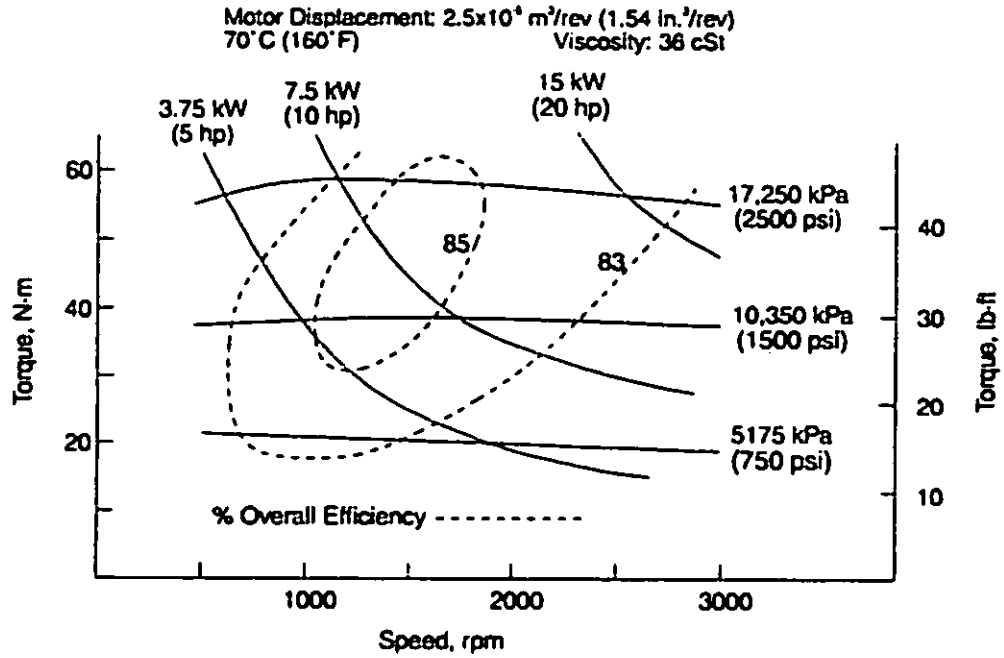

Reprinted from *Hydraulic Pumps and Motors, Selection and Application for Hydraulic Power Control Systems*, p. 103, by courtesy of Marcel Dekker, Inc.

Figure 2-32. Typical Performance Curves for Gear Motors (Ref. 8)

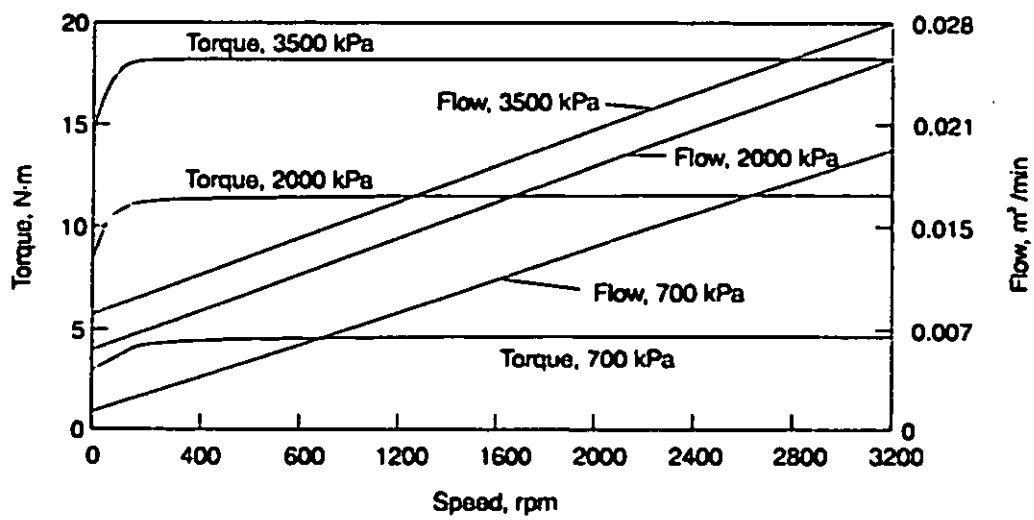

Figure 2-33. Typical Crescent Seal Motor Performance Curves

Downloaded from http://www.everyspec.com

2-4.2.1.3 Gerotor-Type Motors

The gerotor motor (See Fig. 2-7 for the corresponding pump.) is suitable for high-speed operation and exhibits relatively high starting-torque efficiency. It can be used for operating pressures up to about 13,790 kPa (2000 psi). Volumetric efficiency is relatively low and leakage rates are high at most speeds. The cost of gerotor motors is relatively high in comparison with the cost of other gear motors. The performance curves of Fig. 2-34 are typical of the gerotor motor.

2-4.2.2 Vane Motors

Most vane motors are of the balanced-rotor type because hydraulic unbalance causes large radial bearing loads, which limit the use of unbalanced vane motors to low pressure operation and applications for which weight and space considerations do not preclude the use of large, heavy bearings. Therefore, most vane motors have a mechanical configuration similar to that of the balanced vane pump shown in Fig. 2-10 and thus are fixed-displacement units. To accommodate starting and low-speed operation, it is usually necessary to provide a force—in addition to the centrifugal force—to move the vane radially outward. Springs are commonly used for this purpose.

As with vane pumps, rolling and swinging vanes can also be used in vane motor design. The overall running efficiencies of vane motors are typically 80 to 85%. These motors are available at rated powers up to approximately 93 kW (125 hp), pressure ratings to about 17,000 kPa (2500 psi), and maximum speeds of approximately 3000 rpm. Characteristic performance curves of a vane motor are shown in Fig. 2-35.

2-4.2.3 Limited-Rotation Motors

Limited-rotation motors, or rotary actuators, provide an oscillating power output. A variety of such units is available, all of which consist of one or more fluid chambers and a movable surface against which the fluid pressure is applied. Both vane-type and piston-type motors can be used to obtain an oscillatory output.

2-4.2.3.1 Vane Type

There are two types of limited-rotation vane motors, the single vane and the double vane. The single-vane unit, shown in Fig. 2-36, consists of a cylindrical housing, a shaft with a single vane, a barrier to limit the vane rotation, and end pieces to support the shaft (Fig. 2-36). High-pressure liquid enters on one side of the vane and forces the vane to rotate to the barrier. A rotation of approximately 280 deg can be obtained with the single-vane unit. In the double-vane unit, shown in Fig. 2-37, the high-pressure fluid enters on one side of a vane and is ported through the shaft to the corresponding side of the other vane. A rotation of about 100 deg is possible with the double-vane motor. In both the double- and the single-vane units, seals are maintained between the rotor and the barriers and between the vanes and the housing. Limited-rotation vane motors are available with torque outputs ranging from less than 1 N·m (9 lb·in.) at about 345 kPa (50 psi) to nearly 85,000 N·m (750,000 lb·in.) at 20,500 kPa (3000 psi).

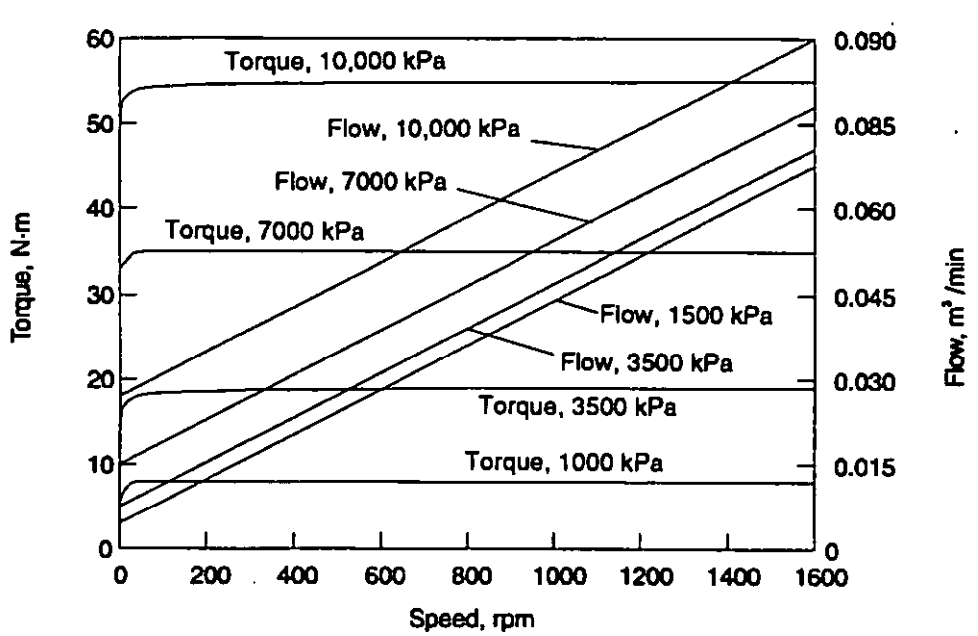

Figure 2-34. Typical Gerotor Motor Performance Curves

Downloaded from http://www.everyspec.com

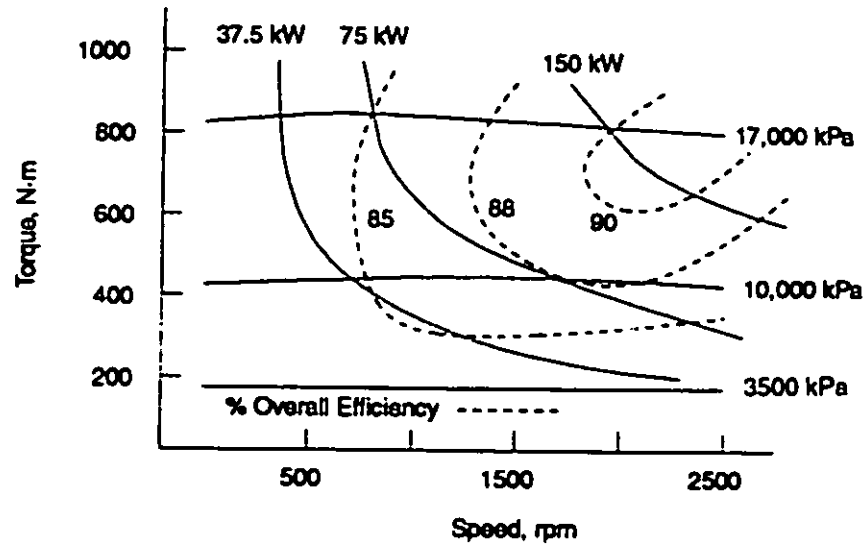

Reprinted from *Hydraulic Pumps and Motors, Selection and Application for Hydraulic Power Control Systems*, p. 104, by courtesy of Marcel Dekker, Inc.

Figure 2-35. Typical Balanced Vane Motor Performance Curves (Ref. 8)

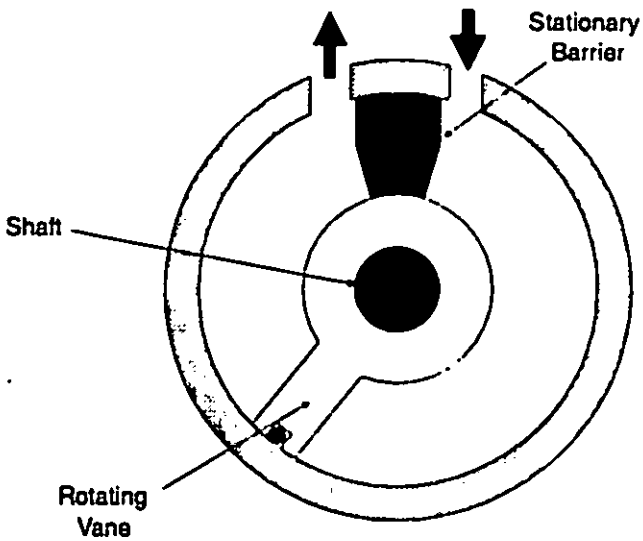

Figure 2-36. Typical Single-Vane, Limited-Rotation Motor

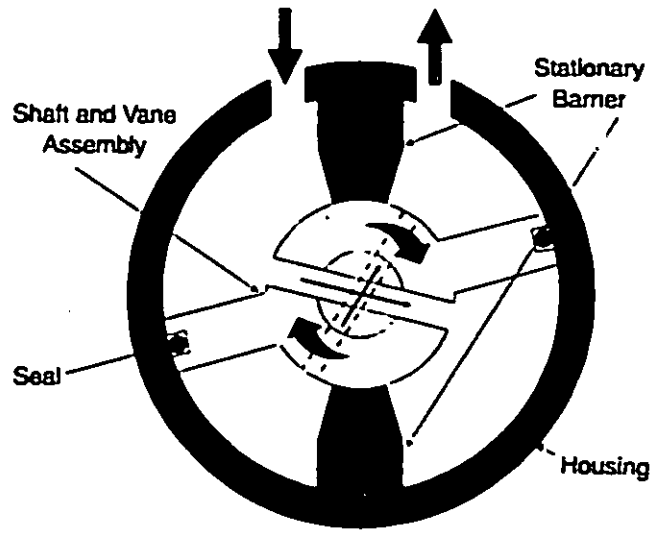

Figure 2-37. Double-Vane, Limited-Rotation Motor

2-4.2.3.2 Piston Type

Piston-driven actuators are available in several configurations designed to produce an oscillating output. The helix-spline unit employs a shaft with a helical screw that passes through the piston. A guide rod prevents rotation of the piston. Rotations of greater than 360 deg are possible. A self-locking helix angle prevents rotation when an external torque is applied.

Limited rotary motion can also be achieved by using a rack and pinion system, as shown in Fig. 2-38. In these devices the linear motion of the cylinder is converted to rotary motion through the gear mechanism. The degree of rotation is limited by the stroke of the cylinder. A single cylinder can be used, although higher torques require more than one cylinder. A high-torque unit is shown in Fig. 2-39.

2-4.2.4 Piston Motors

Piston motors which generate a continuous rotary output motion can be classified in terms of the piston motion—axial, radial, or rotary. They can be fixed- or variable-displacement devices and can operate at high pressures and have high volumetric efficiencies. The power-to-weight ratio of piston motors is not as favorable as that of gear and vane motors, but piston units are available with power outputs greater than 225 kW (300 hp). The relative cost per horsepower is high.

Downloaded from http://www.everyspec.com

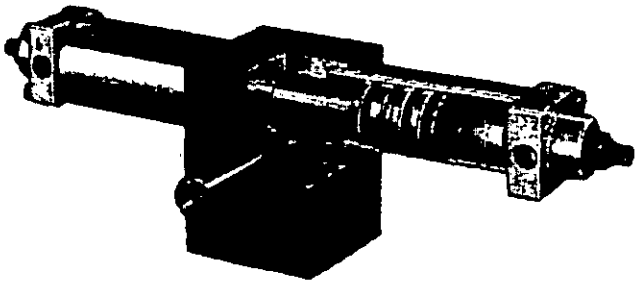

PHD, Inc., Fort Wayne, IN.

Figure 2-38. Rack and Pinion Rotary Actuator (Ref. 14)

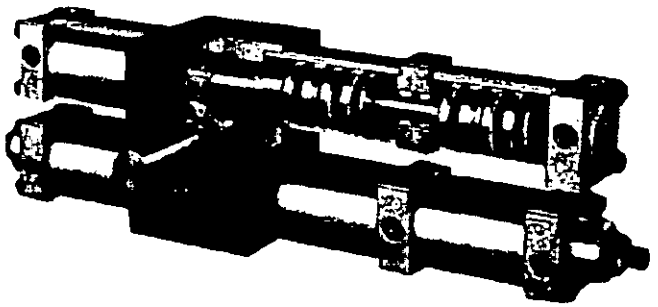

PHD, Inc., Fort Wayne, IN.

Figure 2-39. High-Torque Rack and Pinion Rotary Actuator (Ref. 14)

2-4.2.4.1 Axial Piston Type

The operation of an axial piston motor is essentially the same as that of an axial piston pump except for the direction of flow. (See Fig. 2-12.) The high-pressure liquid introduced through the motor inlet forces the piston assembly against the thrust cam or swashplate. The angular application of this force causes the plate to rotate and this rotation is transmitted by the shaft. In variable-displacement types the displacement can be varied by changing the angle of the swashplate. Leakage is low under both running and stalled conditions.

2-4.2.4.2 Radial Piston Type

The radial piston motor is also essentially its pump counterpart from Fig. 2-16 operating in reverse. Liquid enters the piston chamber through a central pintle. The piston is forced radially outward against the thrust ring and thereby produces a force tangent to the piston chamber. The resulting torque causes the shaft to rotate. This motor type exhibits very high volumetric efficiencies and high torque and is well-suited for low-speed application because of the small mass of the rotating parts.

2-4.2.4.3 Rotary Piston Type

The rotary piston motor is the same as the rotary piston pump except for the flow direction. The pump was described in par. 2-2.3.3. Units are available with a rating up to 225 kW (300 hp) at 2800 rpm with a maximum torque of over 2260 N·m (20,000 lb·in.). Weight and space-to-power ratios are high, and cost per horsepower is usually high.

2-4.2.5 Low-Speed, High-Torque Motors

Low-speed, high-torque (LSHT) motors accomplish their low-speed and high-torque output without the requirement for a gear box. This advantage greatly reduces initial cost, weight, space requirements, and operating costs, and it increases efficiency. Positioning accuracy in certain installations is improved and gear backlash can often be completely eliminated.

While there are no direct counterparts in the family of pumps, LSHT motors use the same basic design mechanisms as pumps, including internal gear, vane, radial piston, axial ball piston, rolling vane, and radial pistons with constant acceleration cams.

2-4.3 HYDROSTATIC TRANSMISSIONS

A hydrostatic transmission is a device that converts mechanical power into fluid power, transports this power, and then converts it back into mechanical power. Therefore, the circuit consists of some suitable combination of pump and motor with the necessary piping, valving, and ancillary devices. These circuits, termed "closed loop", are different from the common "open loop" circuit because of the function of the reservoir in the system. In open loop circuits fluid returns from actuators, drain lines, and valves to the reservoir. Meanwhile, the pump is continuously drawing fluid from the reservoir for use in the system. In a closed loop circuit fluid returns from the actuator directly to the pump inlet without passing through a reservoir. If the circuit includes a reservoir, its primary purpose is to provide makeup fluid for any leakage or for pump or motor case drains. The transmission characteristics depend on the pump and motor combination. The various possible combinations are outlined in the paragraphs that follow. The assumptions made are that the pump outlet and motor inlet pressure are the same, a constant output pressure is maintained on variable-displacement pumps, and the pump speed is constant.

2-4.3.1 Fixed-Displacement Pump and Motor

The torque and power of the pump are functions of the pressure, but the speed and flow rate are usually constant. Below the relief valve setting, the motor torque and power vary with pressure while the speed and flow rate are constant. At or above the relief valve pressure, the motor torque is constant, but motor speed and flow rate are functions of the volume flow rate through the relief valve. The resulting transmission exhibits constant speed with variable torque and power below the relief valve pressure and constant torque with variable speed and power at higher pressures. This type of transmission is shown in Fig. 2-40.

Downloaded from http://www.everyspec.com

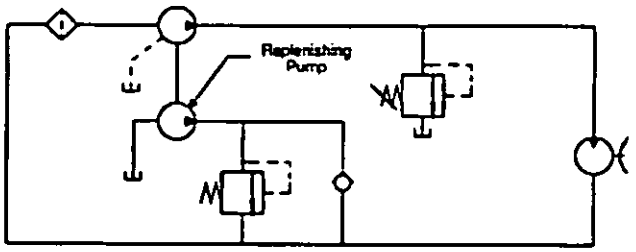

Figure 2-40. Hydrostatic Transmission—Fixed-Displacement Pump and Motor

2-4.3.2 Fixed-Displacement Pump and Variable-Displacement Motor

The pump operates as described in par. 2-4.3.1. The torque of the motor varies inversely with speed. Motor flow rate is a function of both motor displacement and relief valve flow. The transmission, shown in Fig. 2-41, produces constant power, but the torque varies with speed.

2-4.3.3 Variable-Displacement Pump and Fixed-Displacement Motor

The pump pressure and speed are constant, but the input torque and power requirements vary. The motor pressure and the torque output are constant, whereas the speed and power vary. The resulting transmission has constant torque, but the power output varies with speed. See Fig. 2-42 for the circuit diagram.

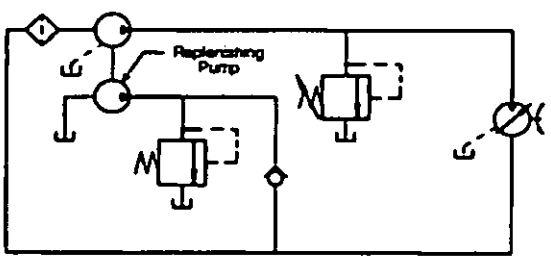

Figure 2-41. Hydrostatic Transmission—Fixed-Displacement Pump and Variable-Displacement Motor

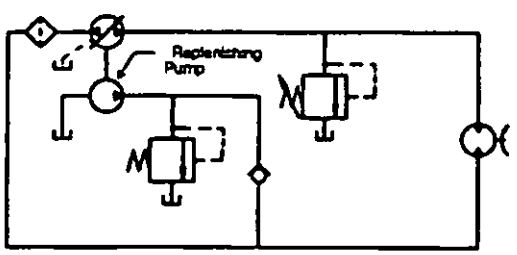

Figure 2-42. Hydrostatic Transmission—Variable-Displacement Pump and Fixed-Displacement Motor

2-4.3.4 Variable-Displacement Pump and Motor

The motor torque and speed are inverse functions of the displacement. The torque and power transmitted by the system can be constant or variable. This unit is shown schematically in Fig. 2-43.

2-4.3.5 Summary

A double-ended hydraulic cylinder can be used in closed loop circuits. This is a very special design that is seldom seen.

Hydrostatic transmissions have been studied for use in military applications (Ref. 15) and continue to have potential as a viable means of vehicle propulsion.

2-5 INTENSIFIERS

An intensifier is a cylinder-like device that uses a small input pressure to produce a high output pressure. This intensification is accomplished by using a large piston area with the low-pressure input and a small piston area to cause the high-pressure output. The ratio of the output-to-input pressure is the same as the area ratio of the input-to-output pistons. Fig. 2-44 shows an intensifier that uses a small-diameter ram driven by a large-diameter piston. Other combinations include a large piston driving a small piston and a large cylinder driving a smaller, separate cylinder. Intensifiers may be of single- or dual-pressure designs.

Intensifiers can be used to advantage in many applications; the benefits result primarily in the areas of component size and process control. For example, an intensifier can provide high pressure to a small hydraulic cylinder using shop air as the input source. An air cylinder to do the same job would be much larger and heavier.

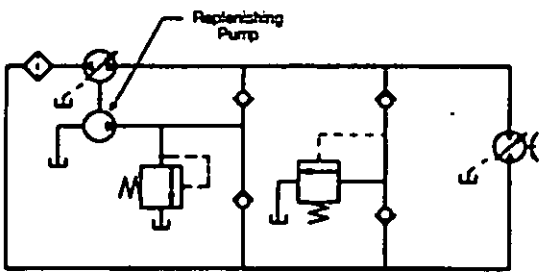

Figure 2-43. Hydrostatic Transmission—Variable-Displacement Pump and Motor

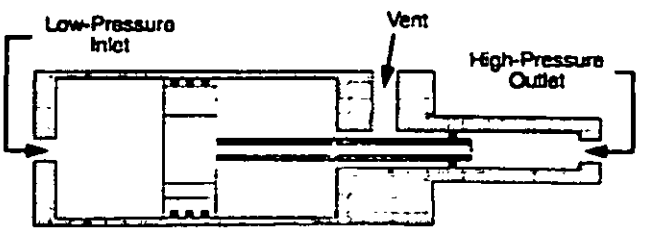

Figure 2-44. Pressure Intensifier

Downloaded from http://www.everyspec.com

Controls are simplified because the low-pressure input can be controlled. The high-pressure output is then controlled indirectly.

Intensifiers can also be completely air operated. This can significantly improve operating safety in hazardous environments. (Ref. 13)

2-6 RESERVOIRS

2-6.1 FUNCTION

Reservoirs not only provide a storage facility for the liquid but can also provide separation of entrained air, removal of solid contaminants and water, and dissipation of heat from the liquid. Thus, along with heat exchangers and filters, the reservoir is an important liquid-conditioning component.

2-6.2 CAPACITY

Even before the conditioning functions of the reservoir are considered in design, the necessary capacity must be determined. The size and configuration depend on many factors. For industrial applications the minimum required capacity can vary from three to ten times the volumetric rating of the pump. This volume/pump flow ratio is often not practical for mobile applications, and no specific ratio has been specified for such applications. Regardless of the unit in which it is installed, the reservoir should be sufficiently large to accommodate the liquid necessary to fill all system components if the liquid drains back to the reservoir. It should have sufficient capacity to maintain a liquid supply at the pump suction at all times, and sufficient liquid should be in the system to prevent the formation of vortices at the pump suction. Reservoir volume should be provided to allow time for solid contaminants, water, and gases to separate from the liquid. This factor also depends on both the characteristics of the liquid and the filtering system design. Adequate space above the liquid level should be provided to accommodate thermal expansion of the liquid. If the reservoir serves as the primary means of dissipating heat from the liquid, it should be large enough to accommodate the required cooling. In some applications the liquid in the reservoir is intermittently used as a heat sink. It is then necessary to provide storage for enough liquid to give the desired heat capacity. For operation in cold environments excessive cooling can also be avoided by proper reservoir capacities.

The weight and space limitations often imposed in aerospace and mobile applications preclude the use of the large reservoirs recommended for industrial systems. In these cases special designs using very small reservoir capacities and complemented by ancillary fluid-conditioning devices, such as heat exchangers, air-oil separators, and extra filtration, are required.

2-6.3 TYPES

There are three basic reservoir arrangements: separate, integral, and dual-purpose. Separate reservoirs are commonly used in large stationary systems for which space and weight are not important considerations. Integral reservoirs are spaces provided within the hydraulic system, e.g., piping, tubular structural members, or machine bases. Such a design minimizes space and weight requirements; however, the storage of a hot liquid within the system can sometimes cause thermal distortion of precision components. If the liquid can serve as both a lubricant and a hydraulic fluid, a single reservoir is sometimes employed for both purposes. The reservoir in which such a liquid is stored is termed a dual-purpose reservoir. For example, the case that houses the transmission in some vehicles, and thus contains the transmission lubricant, also serves as the hydraulic fluid reservoir. In such applications it is necessary that the liquid function satisfactorily both as a lubricant and as a hydraulic fluid. Also, since the liquid absorbs heat from two sources, it may be difficult to provide adequate cooling. In addition, because geared transmissions generate high quantities of particulate contamination caused by gear wear, extra filtration capacity should be provided to protect the components of the hydraulic system.

Environmental air entering a vented reservoir as the fluid level fluctuates can introduce contamination (solids, chemicals, and water) into the system. To prevent this, the reservoir breather should incorporate fine filtration along with a desiccator and chemical filter when necessary. The ideal design uses a sealed reservoir to exclude environmental air.

Of special interest to designers of mobile combat equipment is the critical volume reservoir (CVR). This unit represents a major improvement in the survivability of the hydraulic systems in combat vehicles by reducing the size of the reservoir to a volume just sufficient to operate the system. It is a fluid storage component of variable volume. Its maximum volume is equal to the total volume change that results from hydraulic cylinder actuation plus 1% of the pump capacity. The ancillary functions normally performed by the reservoir—filtration, deaeration, dehydration, and heat dissipation—are performed by components designed specifically for those purposes. Incorporation of a CVR plus the separate fluid-conditioning components can result in 50 to 75% reductions in reservoir volume (Ref. 15).

2-7 FILTERS

Keeping the liquid clean is a very important factor in the long-term operation of a hydraulic system. To minimize contaminant levels, foreign matter should be prevented from entering the system, conditions conducive to contaminant formation within the system should be avoided, and filters should be used to remove contaminants.

Filters are usually rated according to one of two specifications, MIL-F-8815 (Ref. 16) or ISO 4572 (Ref. 17). Both methods are based on the ability of the filter to capture particles of a specified size. The size is measured in micrometers (microns, for short). One micron is one millionth of a meter ($1\ \mu m = 10^{-6}\ m = 3.937 \times 10^{-5}$ in.).

Downloaded from http://www.everyspec.com

MIL-F-8815 defines two terms commonly used to describe filters. The first of these is absolute. The absolute rating indicates the largest hard, spherical particle that will pass through the filter media. The second term is nominal, which is the particle size at which 98% of the hard, spherical particles are removed.

Caution must be used when applying these terms to modern, depth-type filters for hydraulic systems. First, they are based on hard, spherical particles, a phenomenon seldom found in hydraulic systems. Instead most particles are of irregular shape and may have one dimension larger than that which would normally pass through the media.

A second problem with these terms is that many filter manufacturers have arbitrarily applied them outside the parameters defined by MIL-F-8815. In fact, the term nominal has been so badly misused that it has become virtually meaningless.

The second filter rating method is in ISO 4572, the multipass filtration test. This test results in the beta (β) rating of the filter. The beta rating is a dimensionless value defined as the ratio of the number of particles n_u equal to or greater than a specified size x upstream to the number of particles n_d equal to or greater than the same specified size x downstream of the test filter.

$$\beta_x = \frac{n_u}{n_d}, \text{ dimensionless} \qquad (2\text{-}1)$$

where

n_u = number of particles $\geq x$ µm upstream of the filter, dimensionless

n_d = number of particles $\geq x$ µm downstream of the filter, dimensionless

x = particle size, µm (mil).

This method has gained widespread, international acceptance among both filter manufacturers and users. It is the only method currently available that provides a scientifically sound comparative ranking of filters according to their particle capture capability.

2-7.1 CLASSIFICATION OF FILTERS

In addition to particle-size-related criteria, filters are classified according to the filter media, the configuration, or the filtering method. The filter media can be either surface type or depth type. The surface-type filtering media contain numerous orifices of relatively uniform size. Particles larger than the orifice size are trapped on the surface of the media. Wire mesh is an example of a surface filter medium. Depth-type media have long, tortuous, and randomly shaped paths through which the liquid must flow. Particles that are too large to enter the flow paths are captured on the surface. Others may enter the media only to encounter restrictions too small to pass them. Still others may be trapped hydrostatically inside the passages. Electrostatic forces may also cause some particles to be captured. Depth media include sintered metal powders and fibrous materials, such as paper, felt, glass, and cellulose. Classification by filter media is closely related to classification by filtering method, which is discussed in par. 2-7.2.

Fig. 2-45 illustrates some of the capture mechanisms. Depth-type filters use all of these mechanisms, whereas surface-type filters depend solely on the surface capture mechanism.

Differential indicators are frequently incorporated to determine when a filter is becoming clogged to the point that it should be changed. Bypass reliefs can be incorporated where a severely clogged filter might severely affect system operation.

2-7.2 FILTERING METHODS

There are three basic physical mechanisms by which filters can remove contaminants from a hydraulic fluid: mechanical, adsorbent, and absorbent. The filtering methods sometimes function in combination.

2-7.2.1 Mechanical Filters

Mechanical filters (also termed barrier filters) remove particles simply by preventing their passage through the media by virtue of the size of the particle being larger than the media pore size. The most common materials for mechanical filter media are paper and metal (usually sintered spheres or screens).

Paper filters are available in numerous configurations. Some are shown in Fig. 2-46, most of which use pleated cylinders of the media. Some types provide a cartridge insert that is used in conjunction with a separate filter head and a removable bowl or housing. Another style is a spin-on element similar to the crankcase filters used on automobile engines. Neither of these types is cleanable. Rather, they are replaced with a new filter, and the used unit is discarded.

Metal filters are usually either cylindrical rolls or stacks of filter disks. Most metal elements can be cleaned and reused repeatedly although their useful lives are not infinite.

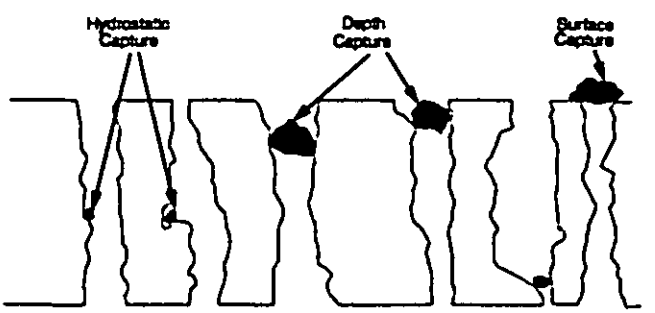

Figure 2-45. Filtration Mechanisms

Downloaded from http://www.everyspec.com

(A) Open Pleated Cartridge

(B) Pleated Paper Cartridge With Protective Outer Cover

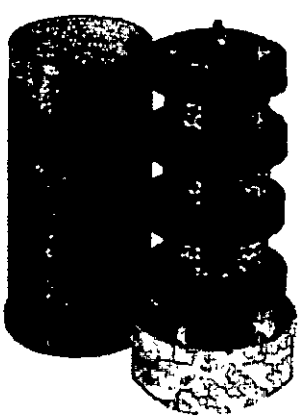

(C) Magnetic Suction Separator With Magnetic Rings and Protective Cover

(D) Spin-On Cannister

Reprinted with permission. Copyright © by Schroeder Brothers Corporation.

Figure 2-46. Filter Configurations (Ref. 18)

2-7.2.2 Adsorbent Filters

Adsorption is the phenomenon by which particles of a material tend to adhere to solid or liquid surfaces. The filter medium in an adsorbent-type filter is finely divided to present maximum surface area to the flow. Materials used in the filter elements include activated clay, charcoal, fuller's earth, chemically treated paper, and bone black. The flow passages of the filter can also mechanically remove contaminants. One disadvantage of the adsorbent filter is the tendency to remove certain additives in the hydraulic fluid. Hence it is not usually recommended for service with fluids that contain additives. Many adsorbent filter housings are designed to accommodate either an adsorbent filter element or a mechanical filter element.

Downloaded from http://www.everyspec.com

2-7.2.3 Absorbent Filters

A porous, permeable medium is used as an element in an absorbent filter. Element materials include diatomaceous earth, wood, pulp, paper, various textiles, and a variety of other substances. As the hydraulic fluid passes through the filter medium, contaminants are trapped by absorption. Water and water-soluble contaminants can be removed by some absorbent filters. The size of solid contaminant that can be filtered depends upon the permeability and porosity of the filter element.

2-7.3 HYDRAULIC FILTER/FLUID COMPATIBILITY

Filter/fluid compatibility applies to the effects of the fluid on the filter as well as those of the filter media on the fluid. The filter media (especially paper), seals, and support hardware can be degraded when the filter is used with an incompatible fluid. Such incompatibilities can be determined by testing in accordance with ISO 2943 (Ref. 19).

The fluid itself may be degraded or chemically altered by the use of adsorbent or absorbent media. The most common problem is the removal of additives that have been used to improve various aspects of the performance of the fluid. Therefore, special consideration must be given to the use of these filters when the fluid is not a straight, unmodified base stock.

2-7.4 FILTER PRESSURE DROP

The pressure drop across a filter is a function of the flow density through the media. Flow density is defined as the flow rate per unit flow area. The significance of this definition is that fine filtration does not necessarily imply a high pressure drop. This is particularly true with the relatively new media consisting of man-made, nonwoven materials. In these materials, because extremely fine fibers are used, the mean pore size can be significantly smaller than with other materials; however, there are also a significantly higher number of pores per unit area. The result is a larger composite flow area, i.e., the pressure drop per unit area is actually lower than with less efficient media. In any case, if the pressure drop across the media is unacceptable, a physically larger filter of the same material will alleviate the problem.

It is difficult to generalize about the effect of increased pressure drop on filter efficiency. It is generally true that filters which rely on surface filtration mechanisms become more efficient with use. In these filters the "cake" of particles that builds up on the surface soon becomes the actual filter media, so filtration improves as the cake thickens.

Depth filters, however, do not necessarily react in the same way as they become loaded with particles. In general, efficiency does improve initially because particles clog the pores and tortuous paths through the media. Most such filters, especially those made of paper or other nonrigid fibers, will eventually reach a pressure drop at which the forces on the trapped particles and the fibers themselves will begin to push some of the particles through the media. Depending on the material, this movement may occur at pressure drops as low as 68.9 to 82.7 kPa (10 to 12 psi) or as high as 689.5 kPa (100 psi) or even higher. At this point the filter efficiency may level off or actually begin to decrease.

Filter manufacturers can supply information on the influence of pressure drop on the efficiency of their products. They can also recommend the pressure drop at which the filter should be changed. Basing filter changes on this information rather than on an arbitrary time basis will ensure both maximum use and maximum effectiveness of the system filters.

Notice that the pressure drop discussed here is the differential across the filter element and not the operating pressure. While the filter housing must always be capable of withstanding the full system pressure (plus any pressure spikes that may occur), the filter element will rarely be required to tolerate such high pressure differentials. In those rare cases metal filters with internal support tubes, disk-type elements, or other such strong and rigid materials will normally be used.

2-7.5 REPLACEMENT OR CLEANING INTERVALS

Two approaches can be used to establish a maintenance program for hydraulic fluid filters. One approach is to establish a time interval for changing each filter. This method greatly simplifies maintenance scheduling but can lead to poor use of filter efficiency and capacity. Changing a filter before it is really necessary means that there may be considerable dirt-holding capacity remaining. Conversely, failure to change a filter when it needs to be changed may result in a loss of filter efficiency because of an excessive pressure drop, the opening of the filter bypass valve (if one exists), or the physical collapse of the filtering element. In either of the last two cases, severe contamination of the system fluid may occur.

The second approach is the use of some type of indicator to show when the element has become loaded to the point that the differential pressure is nearing a predetermined limit. Thus the filtering element is changed only when the indicator shows that a change is required. This method ensures maximum use of the filter efficiency and capacity as well as maximum protection of the system. There are numerous such devices available. Included among them are pop-up buttons, rotating indicators with arrows or color codes, pressure gages, and pressure switches. Fig. 2-47 shows several types of filter condition indicators. Maintenance schedules should include a regular check of the indicators. In addition, incidents such as major component failure or environmental conditions that are likely to cause significant increases in contamination levels require more frequent checks of the indicators.

Downloaded from http://www.everyspec.com

(A) Mechanical Indicators

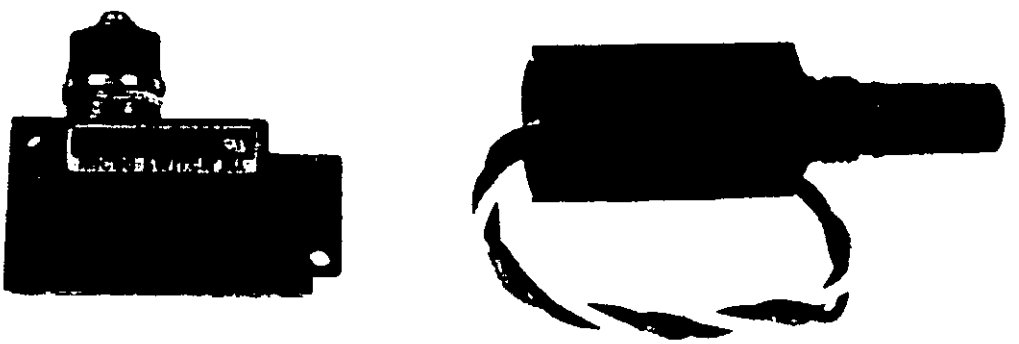

(B) Electrical Sensors

Reprinted with permission. Copyright © by Schroeder Brothers Corporation.

Figure 2-47. Filter Clogging Indicators (Ref. 18)

2-8 ACCUMULATORS

2-8.1 INTRODUCTION

An accumulator is a device that can store hydraulic energy. It is useful in intermittent operation of hydraulic machines when the accumulator can be charged at a low flow rate during the idle portion of the cycle of the driven machine. Accumulators can be used for pressure compensation, pulse damping, leakage compensation, emergency power, auxiliary pressure, and several other applications. They can also be used to apply pressure across a physical boundary between two liquids without contact or mixing of the liquids. This feature permits the pressurization of hazardous fluids, e.g., a volatile liquid, by means of a second liquid that can be safely pumped.

Fig. 2-48 is the circuit diagram for an accumulator circuit used to develop a higher flow rate than could be produced by the pump alone. With the directional control valve in the closed center position, the pump forces fluid into the accumulator until the accumulator pressure reaches the relief valve setting. When the directional control valve is shifted to either extend or retract the cylinder, the accumulator discharges and adds its flow to the pump flow. This results in a higher cylinder speed than could be achieved with the pump flow alone. If there are long periods of time between cylinder operations, it is possible to use a very small pump to charge a large accumulator and use only accumulator flow to operate the cylinder. A worksheet for sizing an accumulator for this application is included in Appendix B. The safety bleed down circuit shown in the figure is used to depressurize the system when the electrical power is off.

An accumulator circuit used to maintain system pressure is shown in Fig. 2-49. When the cylinder reaches the end of its stroke, the pump charges the accumulator until the pressure reaches the setting of the unloading valve. At that point the unloading valve opens and allows the pump to operate at a low pressure, which saves energy and reduces the heat generation rate. Significant energy savings can be realized from this application if the cylinder remains stationary for long periods of time. A bleed down circuit is provided for safety. This circuit automatically bleeds down the system pressure when electrical power is shut off. A worksheet for

Downloaded from http://www.everyspec.com

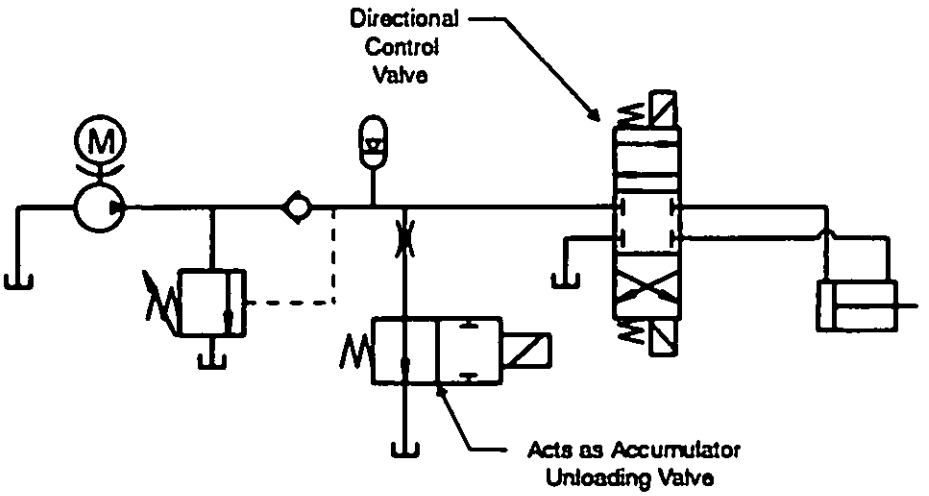

Figure 2-48. Accumulator Circuit for Developing System Flow

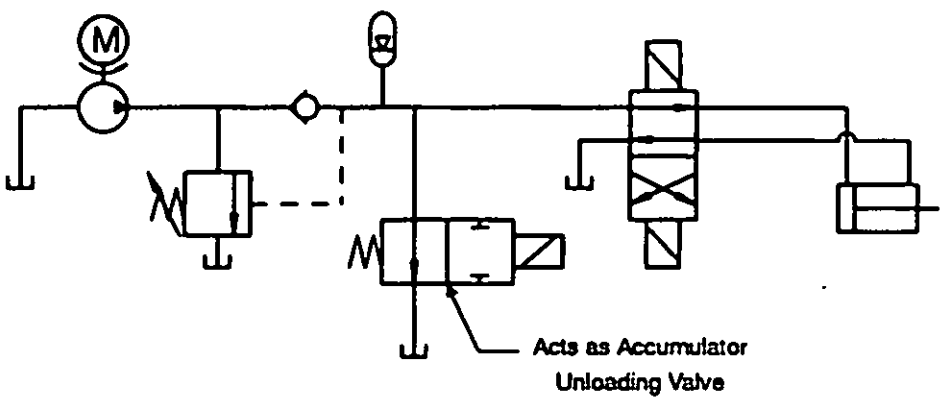

Figure 2-49. Accumulator Circuit for Maintaining System Pressure

calculating the accumulator size for specific pressure-holding applications is provided in Appendix B.

Shock-absorbing accumulator applications are shown in Fig. 2-50. To damp pressure-induced shock in the system effectively, an accumulator must be placed as near as possible to the point at which the shock is generated. Manual bleed down valves are included in this circuit for safety.

Systems using accumulators may remain pressurized even though the pump is not running. Safety considerations require that all circuits containing accumulators be provided with a means of either bleeding down the system pressure or isolating the accumulator from the circuit prior to performing maintenance, inspections, etc., of such systems. Fig. 2-51 illustrates some alternative methods.

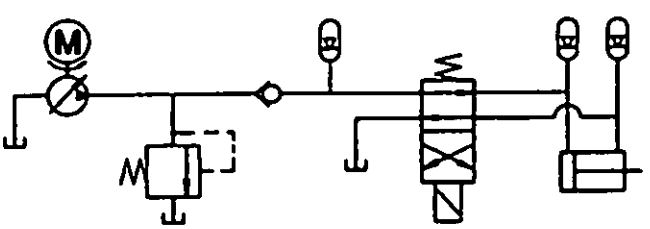

Figure 2-50. Accumulator Circuit for Absorbing Shock

2-8.2 ACCUMULATOR LOADING

Accumulators are classified in terms of the manner in which the load is applied. This is the major factor that influences design. Accumulators can be weight loaded, spring loaded, or pneumatic loaded.

2-8.2.1 Weight-Loaded Accumulators

The weight-loaded accumulator of Fig. 2-52 consists of a piston mounted vertically in a cylinder. The piston rod or plunger is loaded with weights that provide potential energy to pressurize the fluid. This accumulator produces virtually constant pressure at all fluid levels. However, weight-loaded accumulators are large, heavy, and expensive, and they do not respond quickly to changes in the system demand. For these reasons they are not often used in modern hydraulic

Downloaded from http://www.everyspec.com

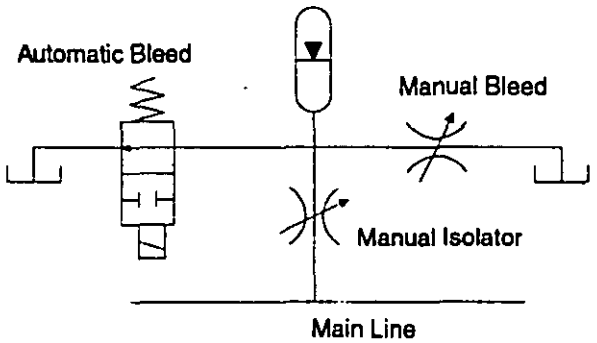

Figure 2-51. Accumulator Safety Circuit Options

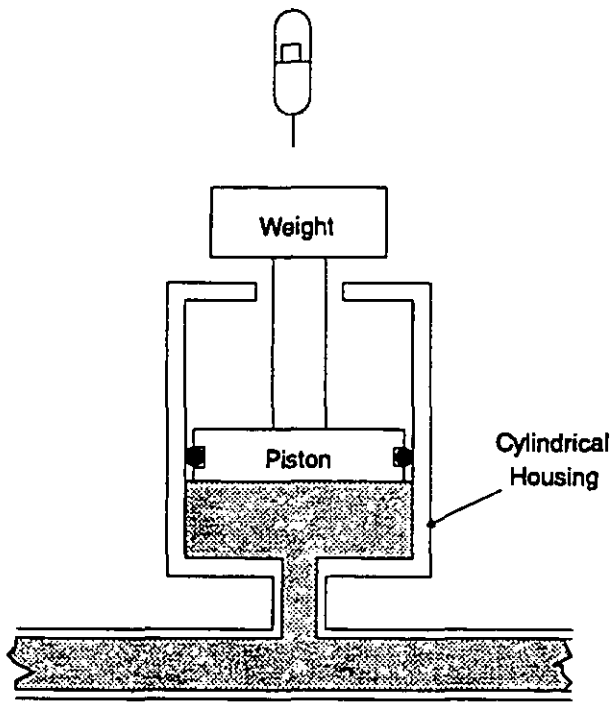

Figure 2-52. Weight-Loaded Accumulator

systems except where very large flow rates are required for industrial processes.

2-8.2.2 Spring-Loaded Accumulators

An accumulator in which the compression energy is supplied by a spring is shown in Fig. 2-53. The pressure varies with the amount of fluid in the accumulator since the spring force depends on displacement. Although such spring-loaded devices are easy to maintain, they are relatively bulky and costly. Thus most applications are for low-volume, low-pressure systems.

2-8.2.3 Pneumatic-Loaded Accumulators

There are two types of pneumatic-loaded accumulators. In one type the gas, which provides the load, is in direct

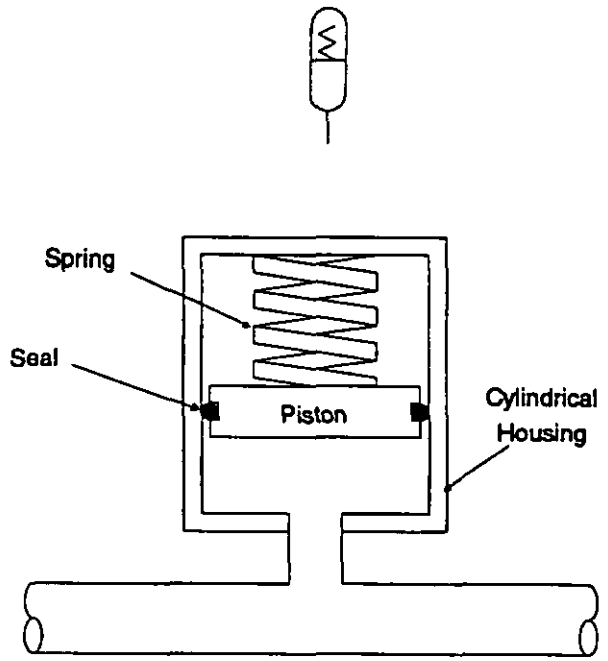

Figure 2-53. Spring-Loaded Accumulator

contact with the hydraulic fluid, whereas in the second type the gas and fluid are separated by a diaphragm, bladder, or piston.

2-8.2.3.1 Nonseparated Type

Pressurization in a nonseparated, pneumatic-loaded accumulator is achieved by introducing a pressurizing gas into a container above the liquid level. The pressurized storage vessel is a simple example of this type of accumulator. This type can accommodate large liquid volumes, but aeration of the liquid often precludes its use in hydraulic systems. Fig. 2-54 shows a diagram of a nonseparated pneumatic accumulator.

2-8.2.3.2 Separated Type

Aeration in the pneumatic-loaded accumulator can be eliminated by providing a barrier between the pressurizing gas and the hydraulic fluid. Diaphragms, bladders, or pistons are used as barriers. A diaphragm-type accumulator is shown in Fig. 2-55. The vessel is separated into two compartments by a flexible diaphragm. One compartment is connected to the hydraulic system and the other to the high-pressure gas system. In most designs a spring-loaded, normally open check valve or a screen is provided at the liquid connection to prevent extrusion of the diaphragm into the liquid line when the fluid is discharged.

The bladder-type accumulator usually has a bladder inside a cylindrical shell with pressurized gas inside the bladder and the hydraulic fluid between the bladder and the housing, as in Fig. 2-56. The bladder is usually constructed

Downloaded from http://www.everyspec.com

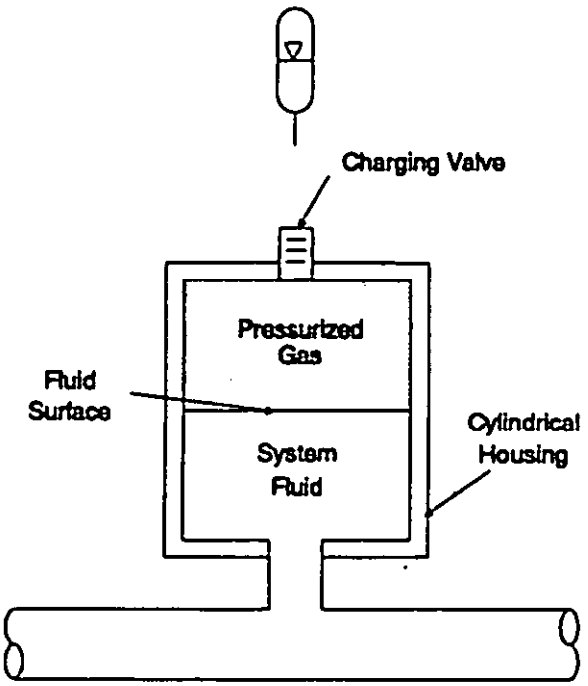

Figure 2-54. Nonseparated, Gas-Charged Accumulator

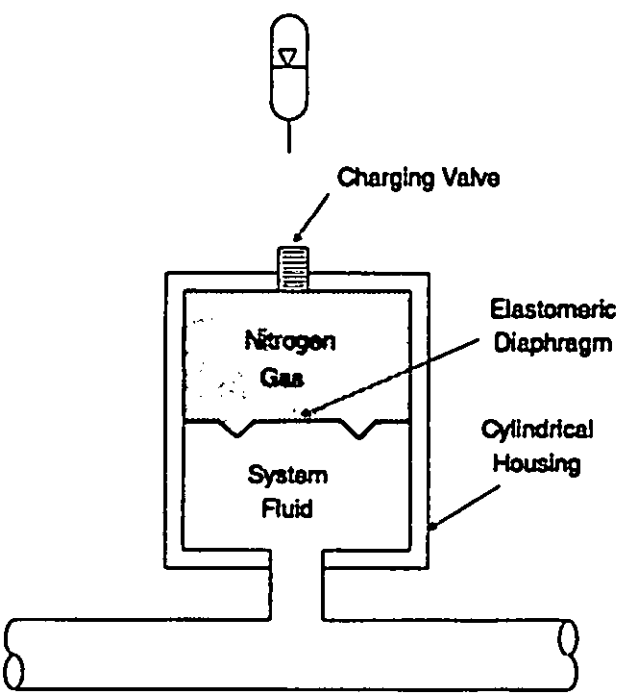

Figure 2-55. Diaphragm-Type Accumulator

with its thinnest wall near the gas port. It thus expands at the top first and then along the walls to force the liquid out through the poppet valve. This design can be used for ratios of maximum to minimum pressure up to about 5 to 1.

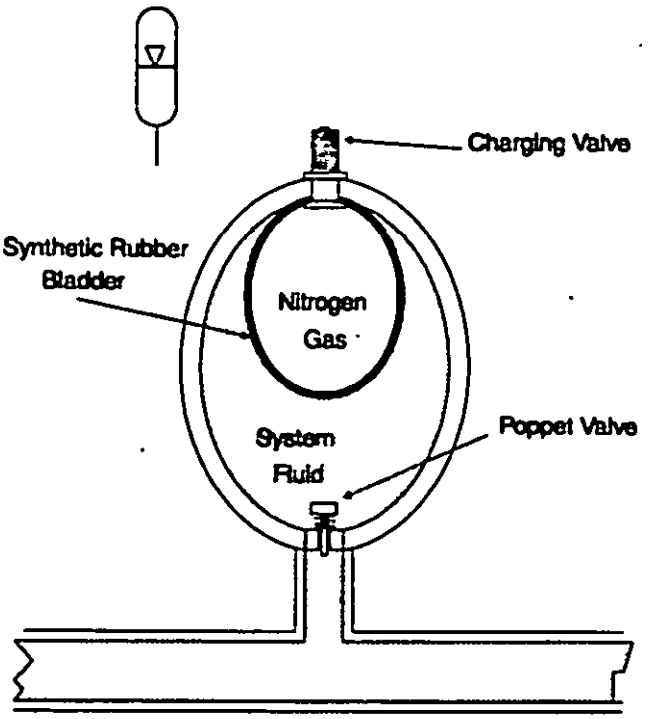

Figure 2-56. Bladder-Type Accumulator

A free-floating piston can also serve as a barrier between the gas and hydraulic fluid, as shown in Fig. 2-57. This type is less effective as a pulsation damper than is the bladder type.

The separated, pneumatic-loaded accumulators are the most commonly used. The precharge gas for modern high-

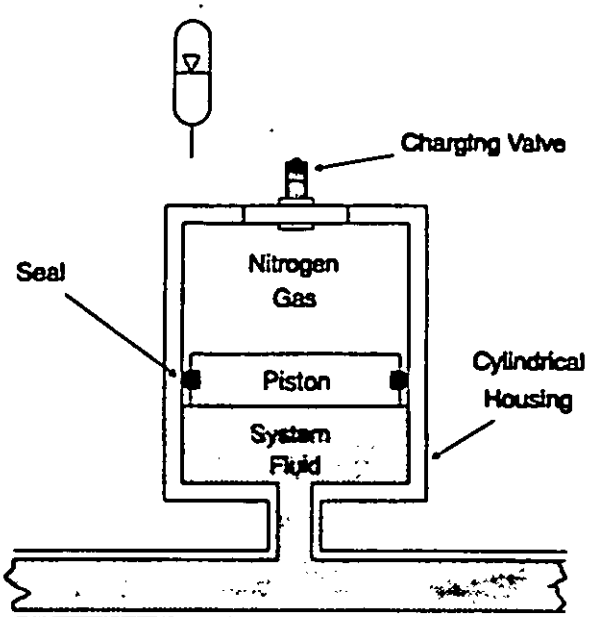

Figure 2-57. Piston-Type Accumulator

Downloaded from http://www.everyspec.com

pressure systems is normally nitrogen because it is inert and dry. If air were used for the precharge, moisture in the air could lead to rusting of the shell in either the diaphragm- or piston-type units and ultimately could result in an explosive failure of the pressurized shell. Likewise, a mixture of air and oil vapor in the gas side of a piston accumulator can ignite under certain pressure and temperature conditions, similarly to a diesel engine.

The precharge pressure must be selected in accordance with the recommendations of the manufacturer for the specific application. To ensure proper system operation, the precharge pressure should be checked often enough to detect any minor gas leak that may occur. The failure of a gas-charged accumulator will expel significant quantities of gas into the system fluid. This gas can damage other components, especially the pump.

2-8.2.4 Accumulator Sizing

The specific application and fluid volume requirements are the primary factors that determine the accumulator size. When used to provide system flow, both the accumulator and pump sizes are determined by the percentage of idle time during the duty cycle. If this time amounts to at least 30%, significant savings in both initial costs and energy consumption can be realized by using a small pump to charge an accumulator. The accumulator can then provide the majority of the flow required to operate the system.

Appendix B contains some examples of worksheets that can be used to determine the size accumulator required for certain applications.

2-9 VALVES

Valves are used in hydraulic circuits to control pressure, flow direction, or flow rate. They use mechanical motion to control the distribution of hydraulic energy within the system.

2-9.1 VALVE TYPES

Fluid power control valves are grouped according to function and are given generalized names that reflect their primary purpose. Directional control valves direct the flow of the system fluid through specified flow paths to control the direction of operation of the system actuators. Flow-control valves control the volume flow rate to or from actuators. This flow rate, in turn, controls the speed of the actuator. Pressure control valves may control or limit pressure, or they may be triggered to open or close by fluid pressure in order to control other system operations.

Some valves may incorporate more than one function, for instance, direction and flow control. In almost all cases, as a valve performs its primary function, it affects other system parameters. Therefore, no component can be considered to operate independently of other components in the system.

2-9.1.1 Pressure Control Valves

The term "pressure control valve" is a misnomer for most of the valves in this group. Most of them—the pressure-reducing valve being the only exception—simply sense pressure and respond to it. There are six different members of this group; each is discussed briefly in subsequent paragraphs.

2-9.1.1.1 Pressure Relief Valves

This group of valves has the primary function of limiting system pressure to a maximum level that is usually determined by the compression of a heavy control spring. A typical direct-acting relief valve configuration is shown in Fig. 2-58. These valves are "normally closed", i.e., in their unactuated position there is no flow path through the valve. When the pressure-generated force on the moving mechanism exceeds the spring force, the mechanism moves to open a flow path to the secondary, or tank, port. The system pressure is limited by providing an alternative path for fluid flow.

The moving mechanism may be a ball, poppet, or spool. It may be controlled by the action of the fluid pressure directly on the mechanism (termed "direct acting"), as in Fig. 2-58, or it may be pilot operated, as shown in Fig. 2-59. The force holding the direct-acting valve mechanism

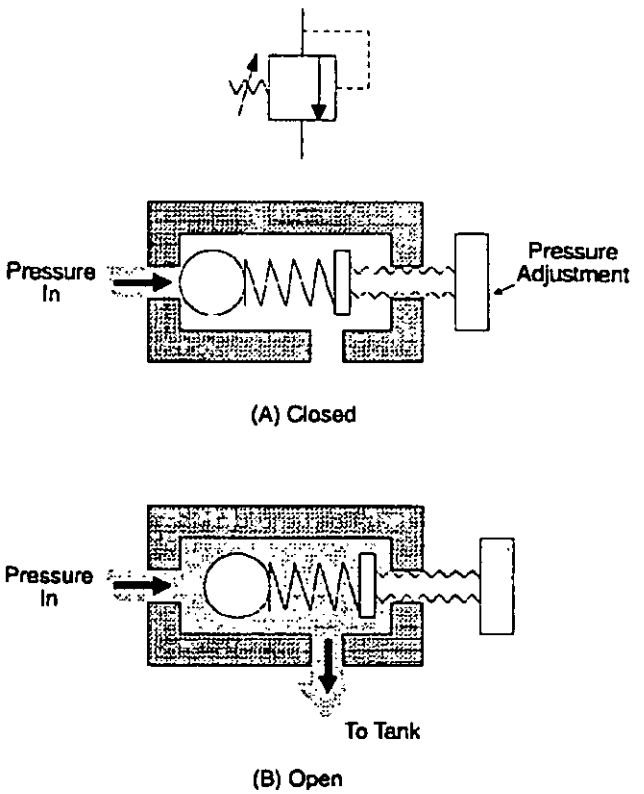

Figure 2-58. Direct-Acting Relief Valve

Downloaded from http://www.everyspec.com

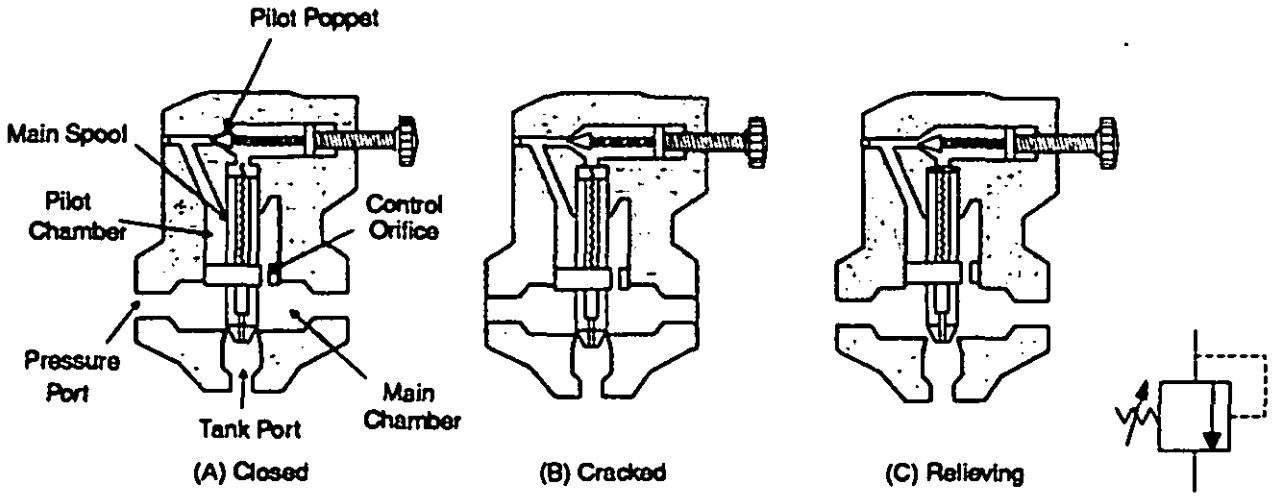

Courtesy of Vickers, Inc.

Figure 2-59. Pilot-Operated Relief Valve Operation (Ref. 5)

closed may be provided by the spring alone or by a combination of a spring and fluid pressure ported to a small area on the back side of the mechanism. This latter valve is sometimes referred to as a differential pressure relief valve.

The function provided by a pilot-operated relief valve is exactly the same as it is for a direct-acting valve. The internal operation is somewhat different, however. The main spool in Fig. 2-59 is termed a "balanced" spool; that is, the effective surface area is the same on each side of the spool land. The orifice through the land allows fluid to enter the pilot chamber. When the pilot poppet is closed, the pressures in the pilot chamber and the main chamber are equal. The light biasing spring in the pilot chamber combines with the pressure to hold the main spool closed.

When the pressure in the pilot chamber becomes high enough to unseat the pilot poppet, a flow path is opened that allows fluid to escape from the pilot chamber. This action lowers the pressure in the pilot chamber and consequently produces a force imbalance that causes the main spool to lift from its seat and provide a flow path from the main chamber to the tank port. The size of the flow path is determined by the system pressure up to the maximum setting of the pilot valve. Only enough flow to maintain the predetermined system pressure is allowed.

By connecting a small, direct-acting relief valve to the vent port of a pilot-operated relief valve, remote pressure adjustments can be made. Alternately, a shutoff valve, as shown in Fig. 2-60, can be used to provide a pressure-unloading capability. This is termed "venting" the pilot-operated relief valve.

2-9.1.1.2 Unloading Valves

Significant energy savings can be realized if the pump can be operated at low pressure during idle times in the system duty cycle. This low-pressure operation can often be accomplished by using the unloading valve shown in Fig. 2-61. This valve, in both design and function, is very similar to a relief valve. The primary difference is that the pressure signal that opens the unloading valve is sensed from some location other than immediately upstream of the inlet port as in the relief valve. This remote pressure then holds the valve open and allows pump flow to return to the tank at low pressure.

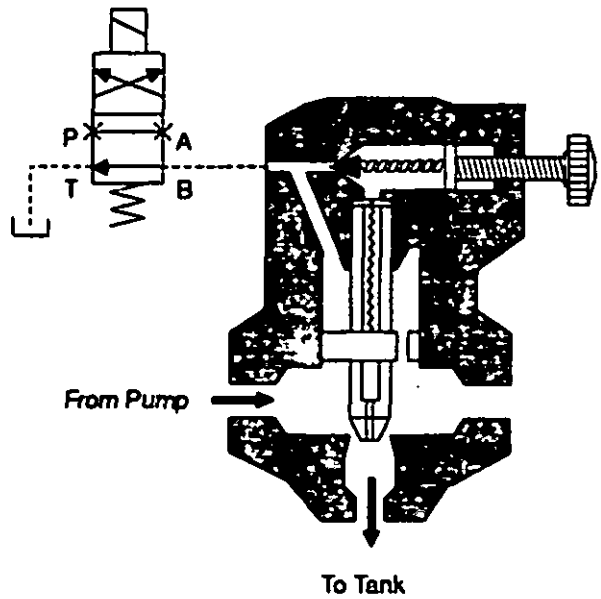

Courtesy of Vickers, Inc.

Figure 2-60. Venting a Pilot-Operated Relief Valve (Ref. 5)

Downloaded from http://www.everyspec.com

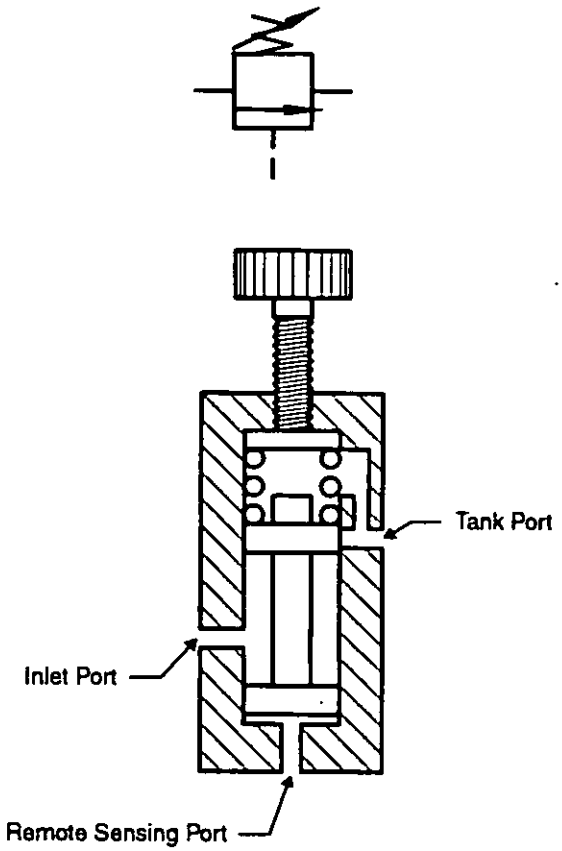

Figure 2-61. Unloading Valve

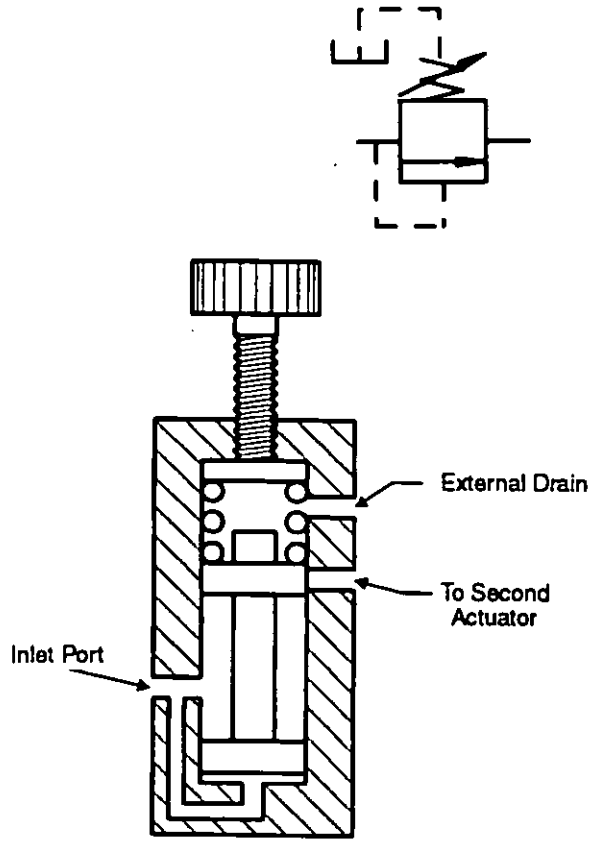

Figure 2-62. Sequence Valve

2-9.1.1.3 Sequence Valves

The ability to control the sequence of operation of two or more actuators automatically can be provided by the sequence valve shown in Fig. 2-62. Again, both design and function are very similar to the relief valve. The secondary port, however, instead of being returned to the reservoir, is directed to the second actuator as seen in Fig. 2-63. When the first actuator completes its stroke, system pressure increases to the sequence valve pressure set point. This causes the valve to open and allows fluid flow to the second actuator. An external spring cavity drain line is usually required to prevent hydraulic lock of the valve mechanism due to fluid leakage into the spring cavity.

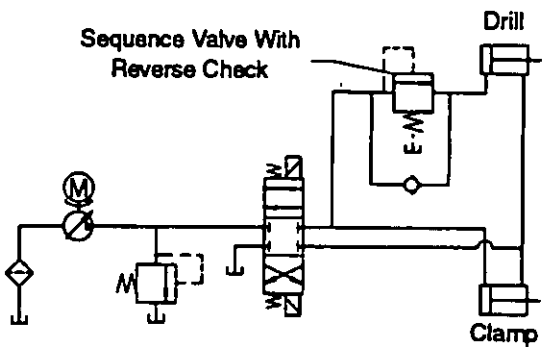

Figure 2-63. Sequence Circuit

2-9.1.1.4 Counterbalance Valves

Downward speed control of heavy suspended loads can be provided by counterbalance valves. These valves, shown in the circuit in Fig. 2-64, use either direct or remote pressure sensing to open the mechanism. Once the mechanism is opened, a controlled flow path meters the flow from the cylinder to control the descent speed of the load.

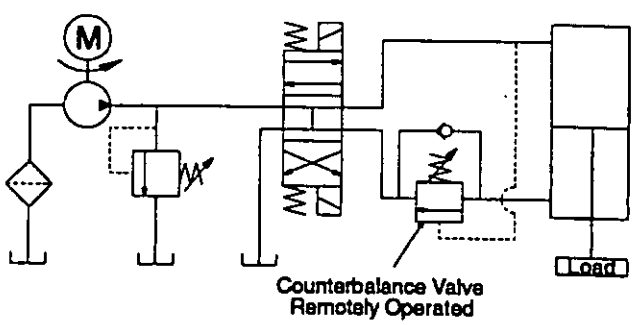

Figure 2-64. Remotely Operated Counterbalance Valve Circuit

Downloaded from http://www.everyspec.com

2-9.1.1.5 Brake Valves

Although counterbalance valves can be used to provide control for hydraulic motors operating with overrunning loads (as in a winch), the brake valve shown in the circuit in Fig. 2-65 will normally provide better speed control. By sensing pressure both upstream and downstream of the motor, the valve mechanism is modulated to adjust the size of the control orifice. This, in turn, provides speed control by metering the flow from the outlet port of the hydraulic motor.

2-9.1.1.6 Pressure-Reducing Valves

Pressure-reducing valves allow parallel branches to be operated at pressures lower than the primary system pressure. As seen in Fig. 2-66, these valves are normally open. Pressure is sensed downstream of the valve and is used to close the mechanism to reduce the size of the control orifice in order to produce a pressure drop across the valve. A small flow orifice is normally provided to prevent locking up the valve in case it should close completely. A spring cavity drain is also normally required.

2-9.1.1.7 Hydraulic Fuses

Hydraulic fuses are located in hydraulic lines leading to the extremities of the system to prevent total loss of fluid in the event of a serious leak or line breakage. There are two types of fuses in common use. One type activates based on the volume of fluid flow through the fuse; the other actuates based on the pressure drop across the fuse.

The flow volume type, shown in Fig. 2-67, contains a fuse piston that is free to slide inside the metering orifice. Metered flow through the orifice creates a drag on the piston that causes it to drift to the right. If there is a downstream leak, the flow will continue to drag the piston to the right until it plugs the flow path and shuts off all flow through the fuse. Reverse flow passes unrestricted through the valve.

Fig. 2-68 shows a fuse that is operated by the pressure drop across the fuse. The piston in this fuse is held in place by a calibrated spring. When a serious leak or line break occurs downstream of the fuse, the higher pressure on the upstream side generates sufficient force to overcome the spring force and push the piston to the right. When the piston covers the holes through which the fluid flows, all flow through the fuse ceases. Reverse flow forces the piston open to allow free flow.

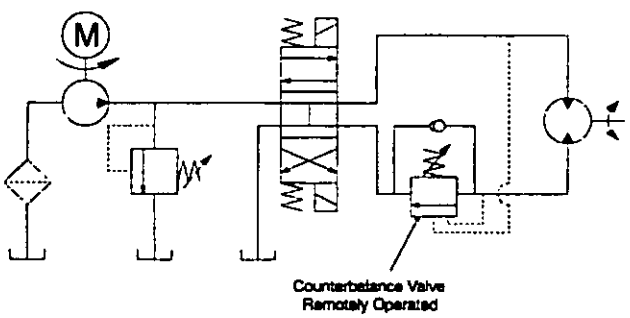

Figure 2-65. Brake Valve Circuit

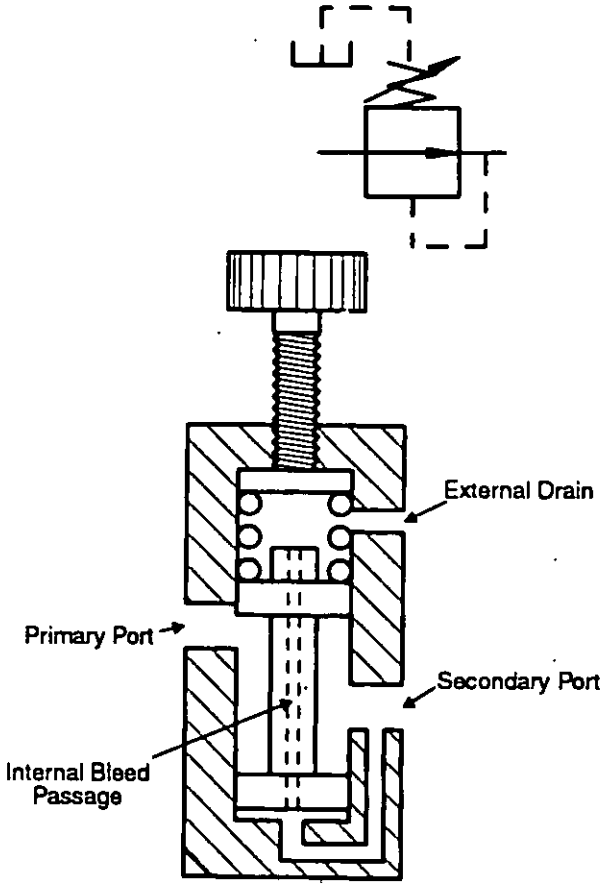

Figure 2-66. Pressure-Reducing Valve

2-9.1.1.8 Rupture Disks

Although not valves, rupture disks like the one shown in Fig. 2-69 are sometimes used to provide the last chance overpressure prevention for hydraulic systems. These devices are designed to rupture at a predetermined pressure. Once the disk has ruptured, it must be replaced before the system can be put back into operation.

2-9.1.2 Directional Control Valves

The flow path that the fluid takes through a system is determined by the directional control valves in that system. The basic types of valves are discussed in the paragraphs that follow.

2-9.1.2.1 Check Valves

Often called "nonreturn valves", check valves perform the function of allowing free flow in one direction through the valve but no flow in the opposite direction as illustrated in Fig. 2-70. The moving member of these valves may be a poppet (as shown in Fig. 2-70), a ball, a flapper, or a spool.

Downloaded from http://www.everyspec.com

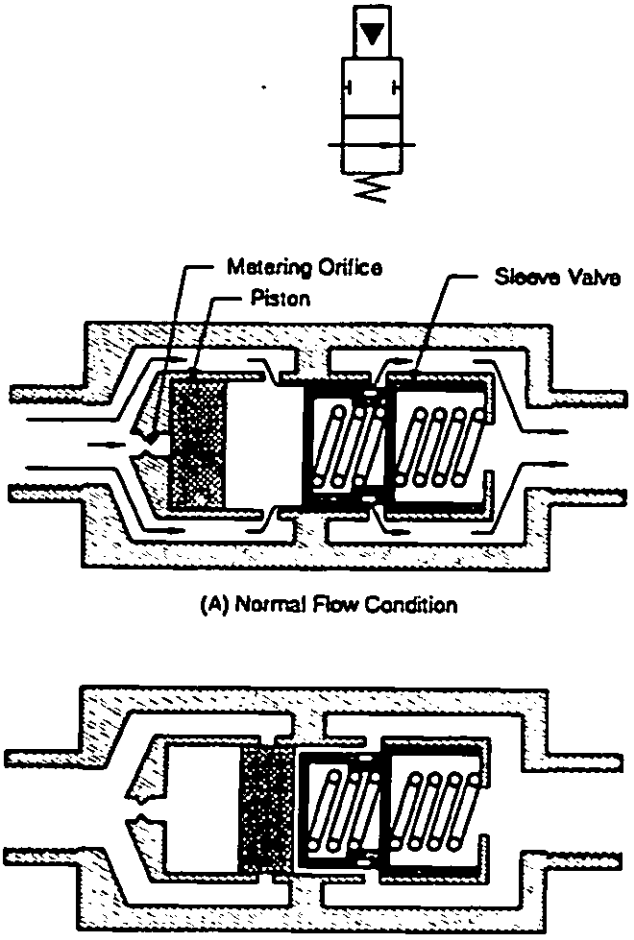

Neese, *Aircraft Hydraulic Systems*, 3rd Edition, 1991
Pages 135, 136, Figures 7.41, 7.42
Krieger Publishing Company, Malabar, FL

Figure 2-67. Flow-Volume-Activated Hydraulic Fuse (Ref. 20)

Balls and poppets are the most common; however, the graphic symbol shown represents all types. Check valves can be used to isolate components, prevent backflow, provide a bypass around other valves, provide a safety bypass around heat exchangers and filters in case of clogging, and even as low-pressure relief valves. These uses are illustrated in Fig. 2-71.

Fig. 2-72 shows a pilot-operated check valve. Such units are used as a safety feature to ensure that suspended loads cannot creep because of leakage through the directional control valve. When the load is to be lowered, a pressure signal is applied at the pilot port to push the plunger, unseat the poppet, and allow fluid to flow "backward" through the valve.

2-9.1.2.2 Shuttle Valves

The shuttle valve in Fig. 2-73 is, functionally, a check valve with two seats. The higher of the two inlet pressures

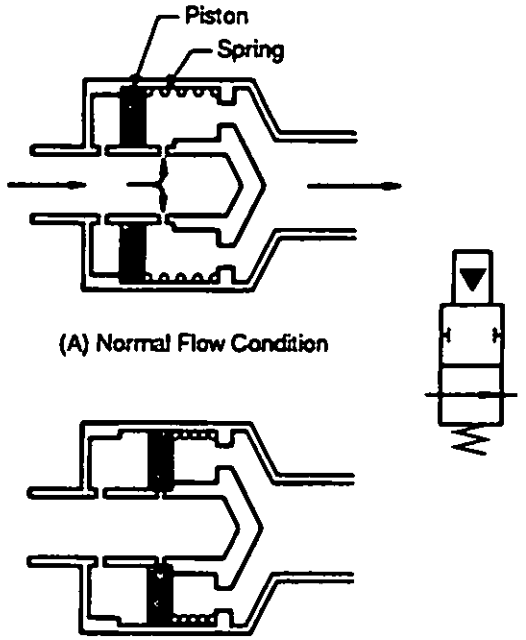

Neese, *Aircraft Hydraulic Systems*, 3rd Edition, 1991
Pages 135, 136, Figures 7.41, 7.42
Krieger Publishing Company, Malabar, FL

Figure 2-68. Differential Pressure-Activated Hydraulic Fuse (Ref. 20)

moves the ball to the opposite seat and shuts off flow from that port.

2-9.1.2.3 Two-Way Valves

The term "two-way", as applied to these valves, is somewhat confusing because it implies that there are two flow paths through the valve when, in fact, only one exists. A better term might be "two-port". A two-way valve is shown in Fig. 2-74. When the valve spool is shifted to the left, fluid flow is permitted from the pressure port P to the working port A. With the spool shifted to the right, this flow path is blocked so that no flow occurs.

2-9.1.2.4 Three-Way Valves

A three-way (or three-port) valve is shown in Fig. 2-75. This valve includes a tank port T so that a return flow path is provided to allow the actuator (usually a single-acting cylinder) to be returned to its original position. In Fig. 2-75(A) flow is from P to A with T blocked. In Fig. 2- 75(B) P is blocked and flow goes from A to T.

2-9.1.2.5 Four-Way Valves

The most common directional control valves are the four-way valves shown in Fig. 2-76. They are used to reverse double-acting cylinders and bidirectional hydraulic motors

Downloaded from http://www.everyspec.com

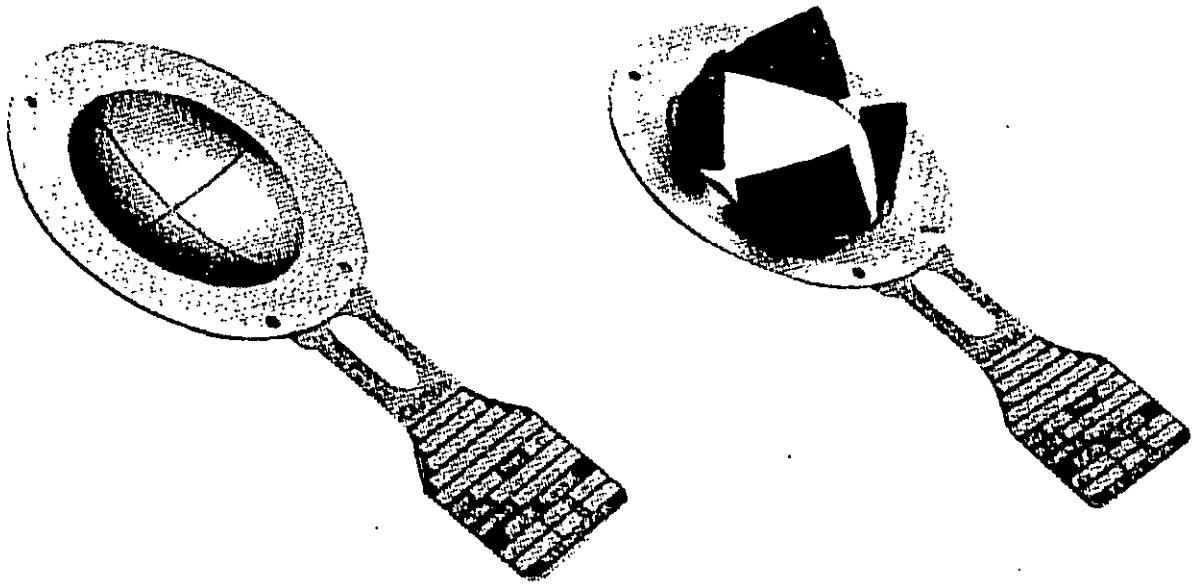

(A) Before Rupture (B) After Rupture

Reprinted with permission. Copyright by BS&B Safety Systems, Tulsa, OK.

Figure 2-69. Rupture Disk (Ref. 21)

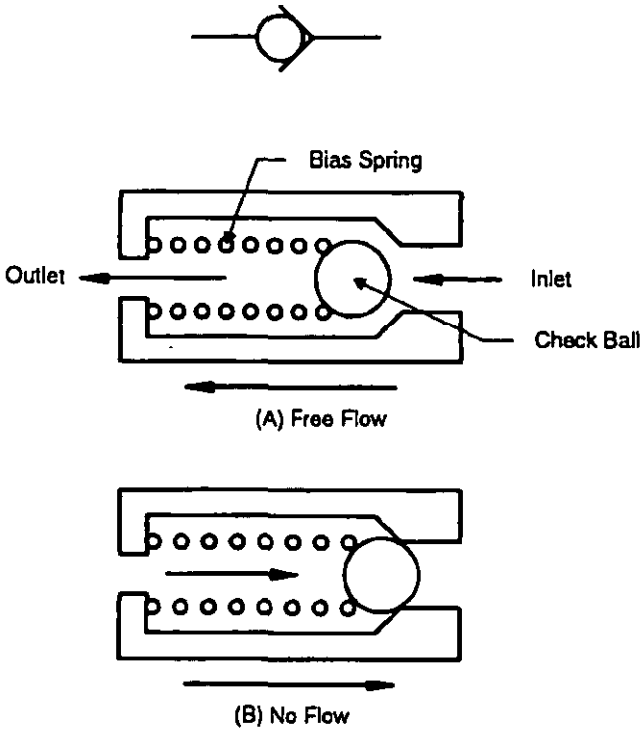

Figure 2-70. Check Valve

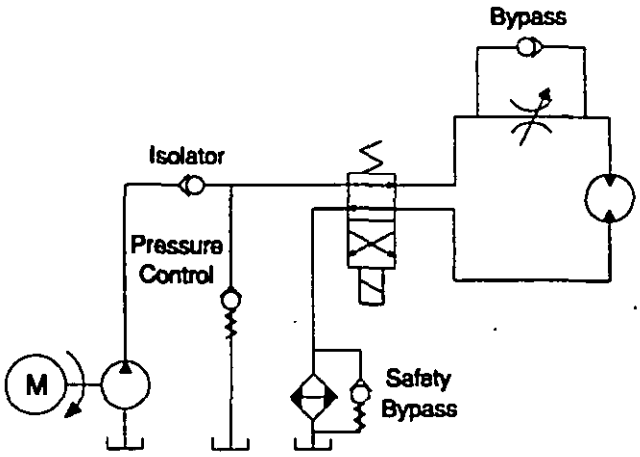

Figure 2-71. Some Common Check Valve Applications

by interchanging the fluid flow paths. Fig. 2-77 shows a circuit for controlling a hydraulic cylinder. When the valve is positioned as shown in Fig. 2-77(A), flow goes from P to B and causes the cylinder to extend. Exhaust flow from the rod end of the cylinder flows from A to T and back to the tank. Sliding the spool to the position shown in Fig. 2-77(B) opens flow paths from P to A and B to T. This causes the cylinder to retract. This valve, as well as the two- and three-way valves, can be rotary rather than spool type.

Downloaded from http://www.everyspec.com

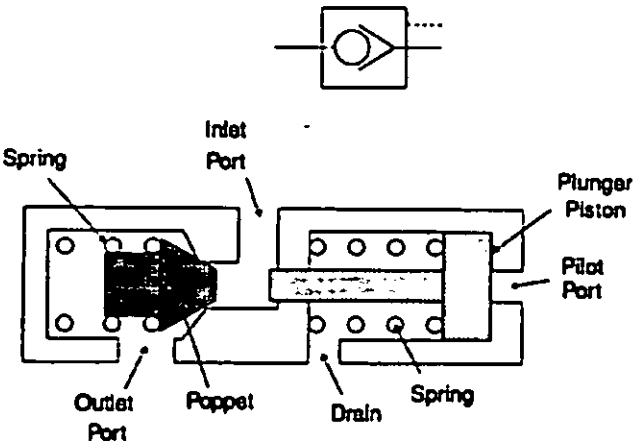

Figure 2-72. Pilot-Operated Check Valve

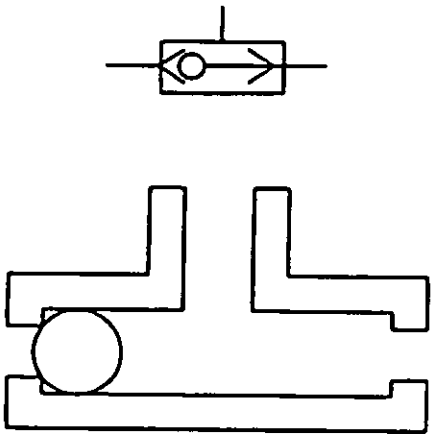

Figure 2-73. Shuttle Valve

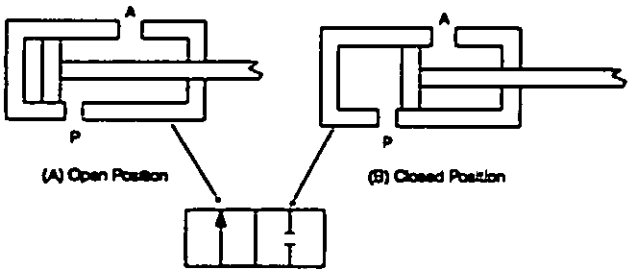

Figure 2-74. Two-Way, Two-Position Directional Control Valve

A third position can be incorporated into these valves to give them more flexibility. This is usually a center position to which the valve spool is returned by spring action when the valve is not actuated. Although Fig. 2-78 shows the more common center positions, any combination is possible.

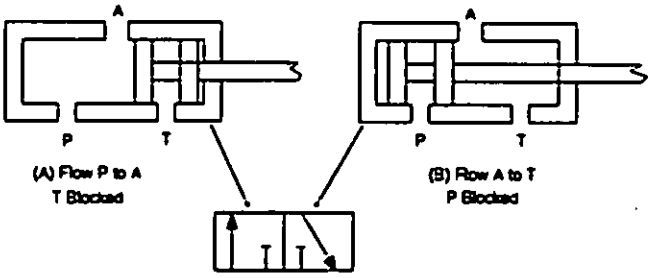

Figure 2-75. Three-Way, Two-Position Directional Control Valve

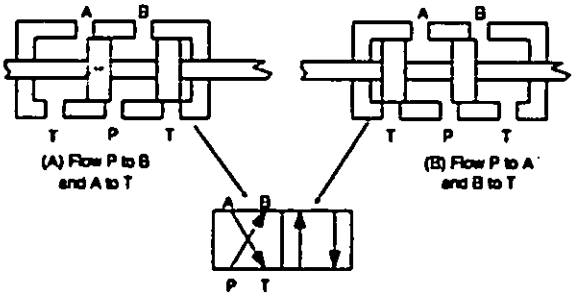

Figure 2-76. Four-Way, Two-Position Directional Control Valve

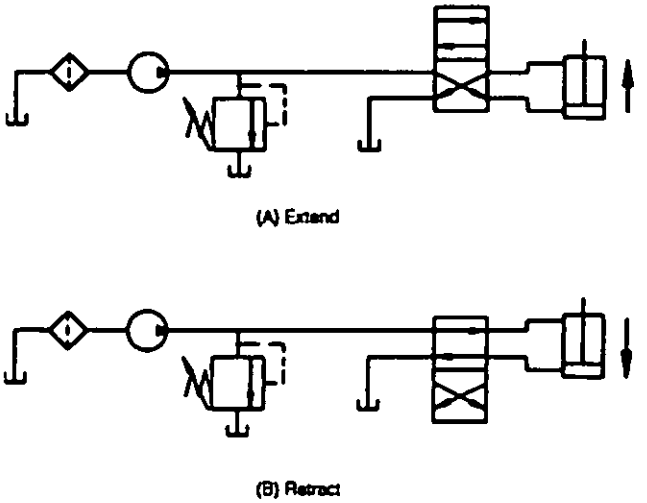

Figure 2-77. Double-Acting Cylinder Circuit

2-9.1.2.6 Deceleration Valves

Deceleration valves are not truly directional control valves, but they are commonly included in listings of directional control valves. As shown in Fig. 2-79, a deceleration valve consists of a profiled spool inserted in the valve body. As the spool moves, the positioning of the waisted section of the spool increases or decreases the size of the flow path through the valve from the inlet port to the outlet port and consequently increases or decreases the flow through the valve.

Downloaded from http://www.everyspec.com

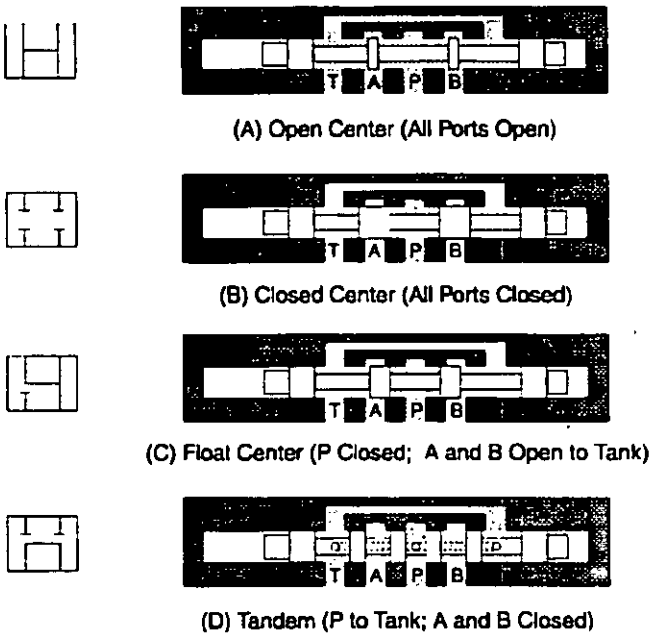

Courtesy of Vickers, Inc.

Figure 2-78. Common Center Conditions for Four-Way, Three-Position Directional Control Valves (Ref. 5)

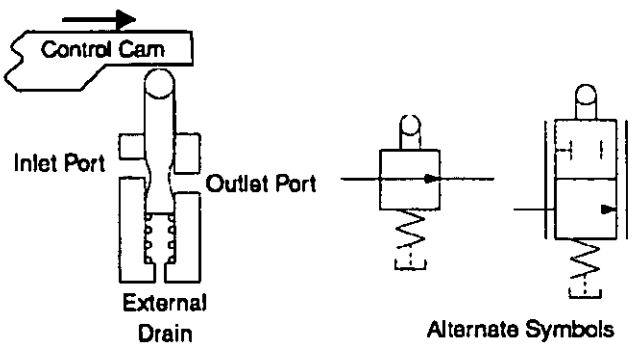

Figure 2-79. Deceleration Valve

The spool stem is a mechanical actuator that allows the spool to be positioned by a cam or a plunger that follows the movement of a hydraulic cylinder of the load being moved by the cylinder. If a cam is used, the cam profile positions the valve spool as the cam rides over the valve stem. The spring on the end of the spool opposite the stem ensures that the actuator remains in contact with the cam throughout the operation.

If a plunger is used to actuate the valve, the plunger will usually be attached to a hydraulic cylinder and operate parallel to the axis of the valve spool. The plunger contacts the spool actuator and pushes it into the valve body. As the spool slides toward the spring end of the spool bore, the size of the flow path is decreased and the fluid flow is reduced. This causes the actuator to slow and finally stop when the flow path is blocked completely. This action provides a controlled, gradual deceleration of the hydraulic cylinder. (Ref. 7)

2-9.1.3 Flow-Control Valves

Flow-control valves are used to regulate the rate of liquid flow to different parts of a hydraulic system. Control of flow rate is a way to govern the speed of hydraulic machine elements. The rate of flow to a particular system component is varied by throttling or by diverting the flow.

2-9.1.3.1 Simple Orifice

An orifice, as shown in Fig. 2-80, is simply a precision hole through a plate or plug that is inserted into the flow path to present a major restriction to the fluid flow. The flow through the orifice is determined by the size of the orifice, the fluid temperature, and the pressure drop across the orifice. Since the size of a simple orifice is not adjustable, there is no way to adjust for any flow variations that result from changes in the pressure drop.

2-9.1.3.2 Globe and Needle Valves

Flow rate is changed in a globe valve by means of a disk, plug, or ball, which nests against a seat. A globe valve is shown in Fig. 2-81. The needle valve, illustrated in Fig. 2-82, uses a tapered stem that nests against a seat and thus gradually reduces the flow area. Needle valves have smaller flow areas and higher pressure drops than globe valves but are more suitable in throttling the flow. The globe valve is

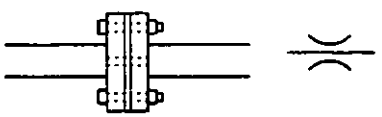

Figure 2-80. Fixed Orifice, Flange Mounted

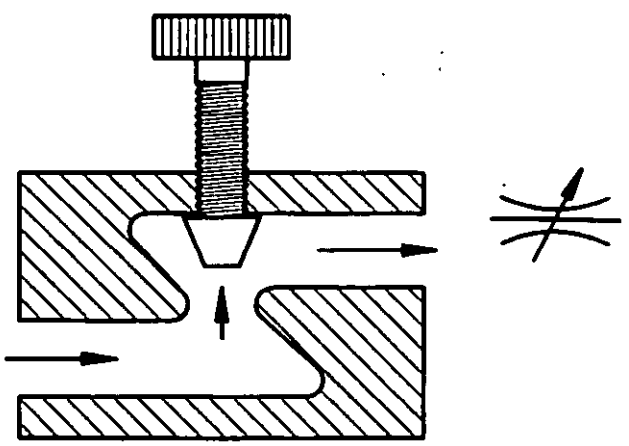

Figure 2-81. Globe Valve

Downloaded from http://www.everyspec.com

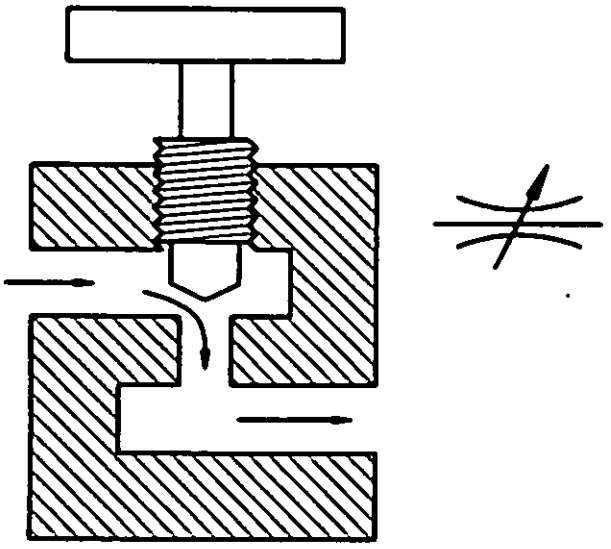

Figure 2-82. Needle Valve

used to throttle only in lines in which the liquid velocity is relatively low. Changes in the pressure drop across globe or needle valves produce variations in the flow rate, i.e., the flow rates are not pressure compensated. This shortcoming limits their utility for applications in which precise flow rate control is required.

2-9.1.3.3 Pressure-Compensated Flow-Control Valves

A constant pressure drop across the valve orifice is required to assure accurate flow control, and it is accomplished with the pressure-compensated flow-control valve. In such valves the pressure drop across the metering orifice is used to assist a spring in moving a balanced spool as shown in Fig. 2-83. A change in the pressure drop produces rapid compensation in the form of spool motion. This spool adjustment causes the pressure drop to return quickly to its original value and thus maintain constant flow. The orifice pressure drop, determined by spring force and spool area, is relatively low.

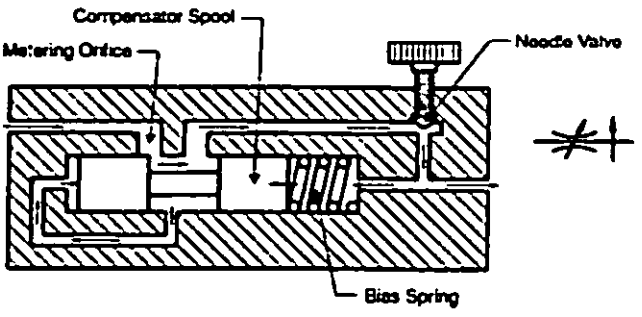

Illustration courtesy of Parker Hannifin Corp.

Figure 2-83. Pressure-Compensated Flow-Control Valve (Ref. 7)

2-9.1.3.4 Temperature-Compensated Flow-Control Valves

Since fluid temperature is a factor that affects the flow rate through a flow-control device, it is sometimes desirable to provide temperature compensation in the valve. This can be achieved by two methods, as shown in Fig. 2-84. One method is to use an aluminum or bimetallic rod as the stem on the needle. As the temperature changes, the rod expands or contracts and adjusts the valve opening as necessary. The second method is to incorporate a sharp-edged orifice to cancel the effects of viscosity changes due to temperature variations.

2-9.1.3.5 Positive-Displacement Metering Valves

An intermittent flow of a specific volume of liquid can be obtained by using a positive-displacement metering valve such as the one shown in Fig. 2-85. The volume of fluid passed by this valve is determined by the adjustable volume stop, which limits the stroke of the control piston. As control flow enters the control chamber through the lower port, the control piston moves upward until it contacts the volume stop. During this upward stroke, fluid enters the metering chamber through the inlet check valve. When control flow enters the control chamber through the upper port, the piston is pushed downward to force fluid from the control chamber through the outlet check valve.

Although this type of valve is somewhat complex and requires an additional valve to control flow into the control chamber, it provides the capability to obtain accurate and repetitive intermittent motion. Other methods for providing this capability would require electrical sensors and control circuitry.

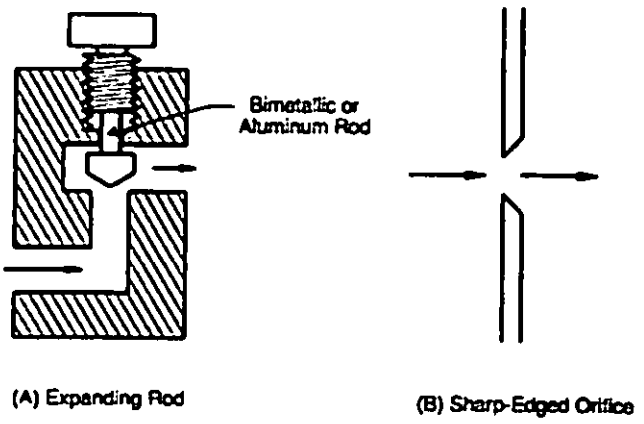

Figure 2-84. Temperature Compensation for Flow-Control Valves

Downloaded from http://www.everyspec.com

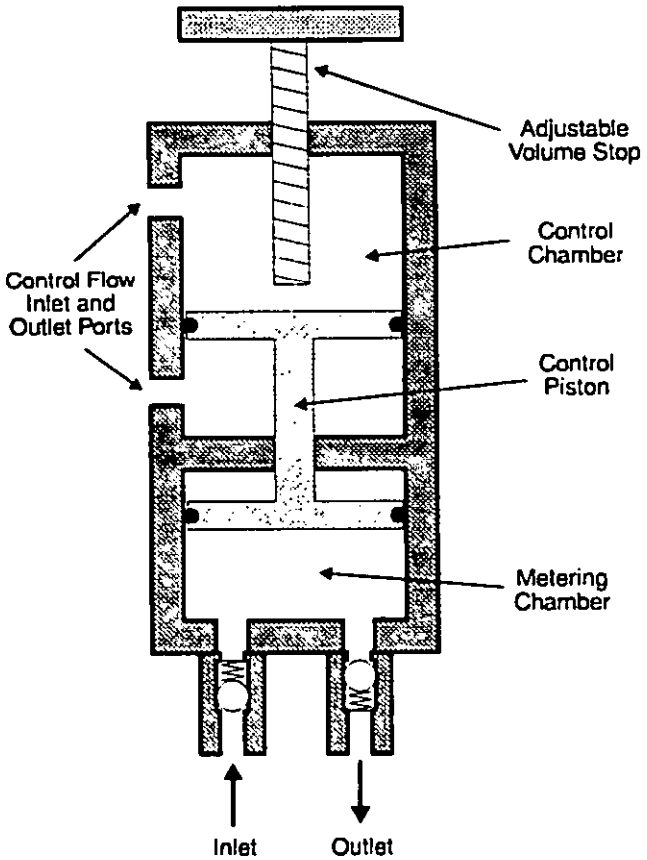

Figure 2-85. Positive-Displacement Metering Valve

2-9.1.3.6 Flow Divider Valves

Flow divider valves can be categorized as either priority valves or proportional flow dividers. Fig. 2-86(A) shows a priority flow divider valve. These units are usually used to ensure that certain essential functions of the system are performed at the expense of nonessential functions in the event that part of the system flow capability is lost. A heavy, calibrated spring is used to position the sliding spool. When there is no flow, the spring positions the spool so that the primary outlet is fully open and the secondary outlet is fully closed. As flow increases, a pressure drop is created across the fixed orifice. This results in a force in the opposite direction from the spring force, which causes the spool to slide to a position at which both the primary and secondary outlets are partially open. This position allows flow through each outlet. At full system flow the flow through each outlet is sufficient to supply the requirements of all components associated with each outlet.

If the pump flow decreases, the pressure drop across the fixed orifice also decreases. This allows the spring to slide the spool to the right and results in an increased opening of the primary outlet and a decreased opening of the secondary port. Eventually, the secondary port will be closed completely, and all available flow will be directed to the primary outlet.

The proportional flow divider of Fig. 2-86(B) divides whatever flow is available between the two outlets according to a preset ratio. The spool in the valve responds to the pressure on each end to cover and uncover the outlet ports alternately. The design of the spool determines the division ratio, which can range from an even division (1:1) to a 90%, 10% division.

2-9.2 VALVE ACTUATION

In order to respond to the system requirements or to the operator's commands, hydraulic control valves must be provided with a means of actuation. Some form of actuation is required, for example, to move the spool in a directional control valve, to adjust flow-control valves, or to change the setting of a pressure control valve. The actuation methods normally used are manual, mechanical, electrical, or fluid. Mechanical actuators include springs, cams, and mechanical linkages. Electric control uses solenoids, proportional solenoids, or torque motors. Fluid actuation requires either a liquid or gas pilot fluid. Fig. 2-87 shows the ISO symbols for the most common actuators. These actuator symbols are drawn on the outside of the envelope representing the actu-

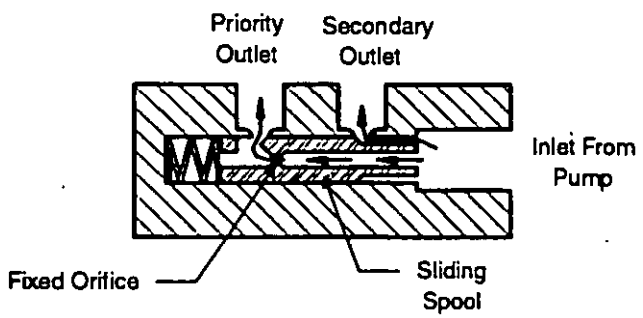

(A) Priority Flow Divider

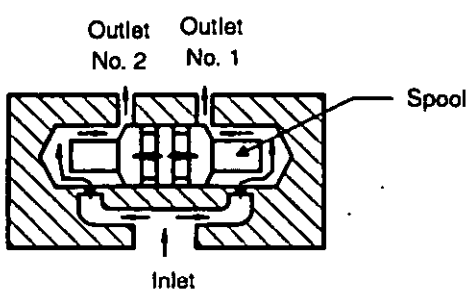

(B) Proportional Flow Divider

Reproduced by permission of Deere & Company, copyright © 1987, Deere & Company. All rights reserved.

Figure 2-86. Flow Divider Valves (Ref. 10)

Downloaded from http://www.everyspec.com

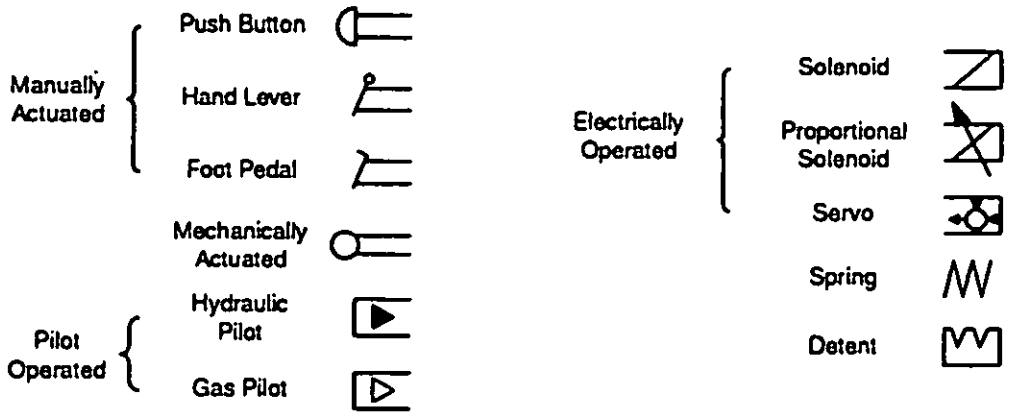

Figure 2-87. Valve Actuator Symbols

ating mechanism of the valve. All actuators, with the exception of the hand lever and the servo actuator, are assumed to push on the valve mechanism. Hand levers and servo actuators can push as well as pull.

2-9.2.1 Manual Actuation

Manual actuation requires action by an operator, who must make a control judgment based upon some system requirement. Manual valve response is limited by the action of the operator; hence flow reactions, such as forces generated in the system, are more critical than in pilot- or electrically actuated valves. Manual control is frequently used when response time is not critical and when some system change must be initiated by the operator. It is widely used in machine tools and mobile equipment.

2-9.2.2 Spring Actuation

From the discussion of valves in this chapter, it is evident that springs are widely used to provide force for a variety of valve operations. However, they seldom supply the entire force required; they are usually assisted by a force from another source that actually determines the manner in which the valve mechanism will react. Often the primary valve actuator acts against a spring that tends to hold the valve in the neutral position. When used in graphic symbols, springs are always considered to push the mechanism.

2-9.2.3 Cam Actuation

In a cam-actuated valve the operating linkage is actuated by a cam that is mounted on a moving machine element. The deceleration valve illustrated in Fig. 2-79 is an example of a cam-actuated valve.

2-9.2.4 Solenoid Actuation

Solenoid-operated valves are generally small, single-stage devices that are referred to as "direct-acting" because the solenoid causes the spool position to change by pushing the spool itself as shown in Fig. 2-88. When large flow

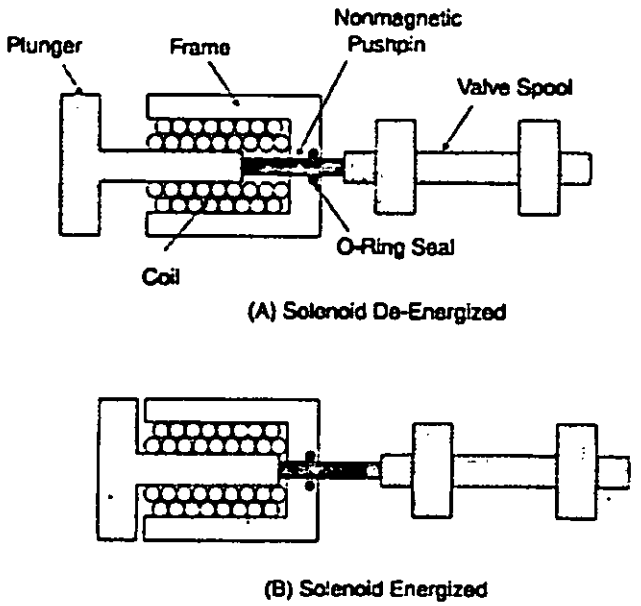

Figure 2-88. Direct-Acting Solenoid Valve Operation

demands require the use of large valves, a direct-acting solenoid valve can be used to control a large spool by directing pilot pressure into the cavities at the ends of the large spool, as shown in Fig. 2-89. These are termed pilot-operated valves.

The pilot valve in Fig. 2-89 is a small, direct-acting solenoid valve that mounts directly onto the large main valve. A pressure source—usually the hydraulic system pump—supplies pilot pressure to the pressure Port P of the pilot valve. Positioning the pilot spool by energizing one of the solenoids directs the pilot pressure to one end of the main spool while opening a flow path to the reservoir through the tank Port T. With solenoid B energized, as shown in Fig. 2-89, the pilot spool has been pushed to its leftmost position. This has opened a flow path from the pressure Port P to Port B and has allowed pressurized fluid to flow to the right-hand

Downloaded from http://www.everyspec.com

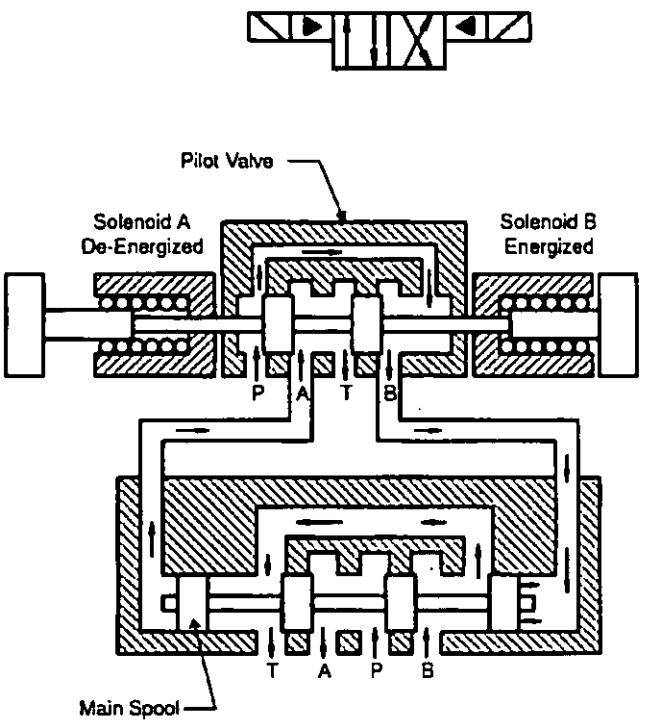

Figure 2-89. Solenoid-Controlled, Pilot-Operated Directional Control Valve

end of the main spool. The main spool is pushed to the left by the pressurized fluid. The fluid in the cavity at the left-hand end of the main spool is pushed out and passes through Port A to Port T and subsequently into the conduit to the system reservoir.

The movement of the main spool has opened flow paths through the main valve. Pressurized flow from the pump enters Port P of the main valve and is directed to Port A, hence to a hydraulic motor or cylinder. Flow that is exhausted from the motor or cylinder passes through the main valve from Port B to Port T (via channels that are cast in the valve body) to the reservoir.

Energizing solenoid A would shift the pilot spool to the right, direct pressurized flow to the left-hand end of the main spool, and shift it to the right. This would redirect the flow through the main valve from Port P to Port B and from Port A to Port T.

Solenoids may be operated by either ac or dc voltage, depending on the application and the electrical power that is readily available. An ac solenoid is generally faster and has higher force capabilities than a dc solenoid. In addition, there are indications that the natural dither provided by the ac current makes these solenoids somewhat more tolerant of contaminants in the fluid. On the other hand, ac solenoids tend to be somewhat noisier than dc solenoids because of their ac "hum". Also the high initial (inrush) current associated with the actuation of an ac solenoid makes it more susceptible to temperature-related failures than is a dc solenoid.

Table 2-1 lists the most common causes of solenoid valve failures. (Ref. 1)

TABLE 2-1. CAUSES OF SOLENOID FAILURES (Ref. 1)

AC SOLENOIDS

Electrical

1. Plunger does not close; continuous high inrush current
   a. Valve spool stuck due to fluid contamination
   b. Voltage too low to provide necessary force to close plunger
   c. Both solenoids energized on a double-solenoid valve
   d. Fluid viscosity too high due to low fluid temperature or fluid deterioration
2. High transient voltage (often the result of inductive loads that result from switching large electric motors)
3. Voltage so high that excessive current persists even though the plunger is closed
4. High cycling rates that do not permit sufficient heat dissipation

Mechanical

1. High impact forces due to overvoltage or an oversized coil for the application. These forces can cause "mushrooming" of the pushpin and ultimately prevent full spool shift as well as structural failure of the solenoid itself.
2. Corrosion caused by moisture or corrosive chemicals
3. High ambient or fluid temperatures that lead to insulation failure
4. Abuse and misuse

DC SOLENOIDS

Electrical: Voltage too high
Mechanical: Same as for ac solenoids

Reprinted by permission from *Fluid Power Technology* by F. Don Norvelle. Copyright © 1993 by West Publishing Company. All rights reserved.

Solenoids, whether ac or dc, may be of two designs. The traditional air-gap solenoid shown in Fig. 2-90 employs a wire coil wound around a plastic bobbin. The coil and bobbin are mounted inside a C-shaped frame of a ferromagnetic material called a C-frame, a C-stack, or simply a stack. Current passed through the coil generates a magnetic field that pulls the T-shaped, ferromagnetic plunger into the coil. The plunger pushes the pushpin, which in turn pushes the spool to its new position. The pushpin moves through an O-ring seal designed to prevent fluid leakage from the valve body into the solenoid cavity.

A more recent innovation is the wet-armature solenoid shown in Fig. 2-91. In this device a cylindrical plunger moves inside a cylindrical core tube. This core tube is threaded into the valve body. By design, it is always filled with the system fluid. The manufacturers of wet-armature solenoids claim several advantages over the standard air-

Downloaded from http://www.everyspec.com

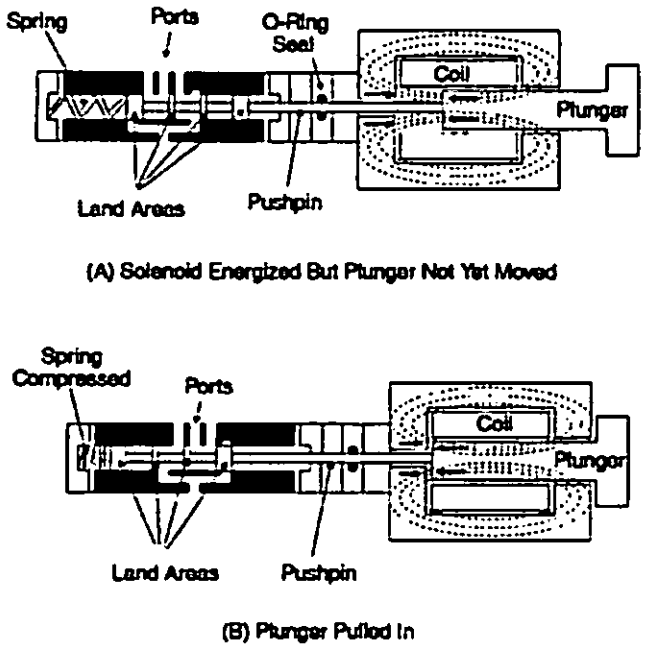

Courtesy of Vickers, Inc.

Figure 2-90. Air-Gap Solenoid Operation (Ref. 5)

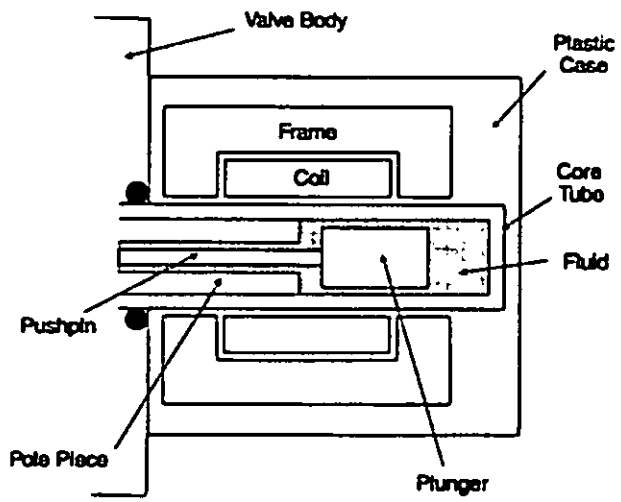

Courtesy of Vickers, Inc.

Figure 2-91. Wet-Armature Solenoid Construction (Ref. 5)

gap design. The most important of these are that the wet-armature solenoid valve almost never leaks and it provides better heat dissipation due to the circulation of fluid that results as the plunger moves.

Solenoids may fail for numerous reasons. In ac solenoids the majority of the failures results from high temperatures that cause insulation failures in the solenoid itself. Most dc solenoid failures are mechanical in nature because these solenoids do not experience the high heating rates that result from the inrush currents of the ac units.

Solenoid actuation provides considerable flexibility in hydraulic system design. System commands can be obtained from signals in any part of the circuit. For example, flow conditions can be controlled by pressure levels through the use of pressure switches, and machine motion can be controlled by limit switches. Time delays can be obtained by using a pressure or limit switch to activate a timer. System operational sequences can be programmed on programmable logic controllers (PLC) to provide automatic control.

2-9.2.5 Proportional Solenoid Actuation

The standard solenoid discussed in subpar. 2-9.2.4 has only two positions—fully open or fully closed. Thus it cannot provide any intermediate positioning that can be used for controlling the flow rate through the valve. The positioning of a proportional solenoid, however, can be infinitely varied throughout its control range so that both directional and flow control can be obtained from the same valve. The spool position is proportional to the current input to the coil. The force output of the solenoid is balanced against the force of a precisely calibrated spring. Because of this intermediate positioning capability, proportional solenoids always operate on direct current.

Fig. 2-92 compares the operation of a conventional solenoid with that of a proportional solenoid. In the conventional solenoid the force increases as the plunger strokes inward. Since this force/stroke curve is nonlinear, the superposed linear spring curve has more than one contact point. This means that any given current input could result in more than one spool position. The proportional solenoid is designed to provide a constant force output over a portion of the plunger stroke. The overlaid spring curve has only one possible spool position for each input current.

Additional spool-positioning accuracy can be achieved by incorporating an internal feedback mechanism, such as a linear variable differential transformer (LVDT). The LVDT produces an electrical signal representing the actual spool position. This signal is compared electronically with a signal representing the commanded spool position. If the signals are different, an error signal is generated to move the spool to the commanded position. Note that this is an internal feedback system and is in no way representative of the action of the load itself. Proportional solenoid systems normally do not use load feedback signals.

Proportional valves may be direct acting; however, proportional solenoids have very limited force capability and can be used only with very small spools. If flows greater than 25 to 30 Lpm (approximately 6 to 8 gpm) are required, pilot-operated valves are commonly used. Proportional solenoids can also be used on pressure controls, such as

Downloaded from http://www.everyspec.com

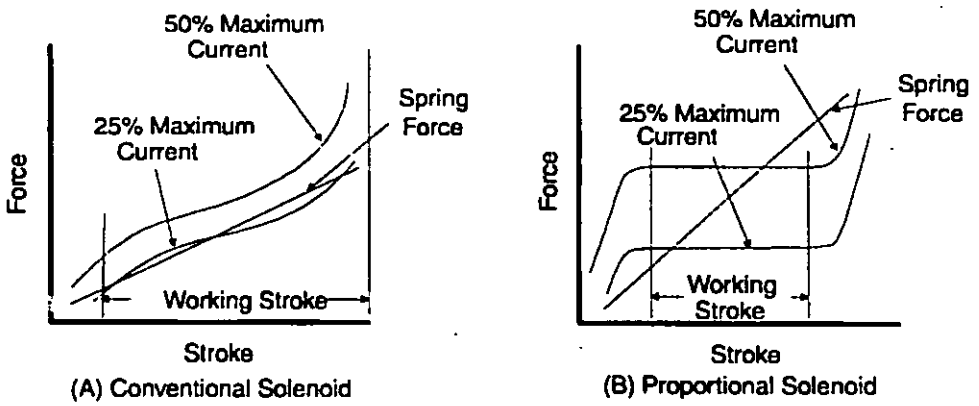

Courtesy of Vickers, Inc.

Figure 2-92. Conventional Versus Proportional Solenoid Force (Ref. 5)

relief and pressure-reducing valves, as well as on flow-control valves.

2-9.2.6 Servomechanism Actuation

Valves controlled by servomechanisms are called servovalves and use an electric signal to control the hydraulic output. The electric signal actuates a torque motor, as shown in Fig. 2-93, which actuates the valve. A polarized torque motor consists of an armature of a magnetic material, which turns in a permanent magnetic field. The armature motion depends on the strength and polarity of the current.

Single-stage servovalves can be used for very low flow applications. In this case a spool-type valve is used, in which the torque motor shifts the spool to provide both directional and flow control. A single-stage valve is shown in Fig. 2-94.

More common than the single-stage valve is the two-stage valve shown in Fig. 2-95. In this valve the torque motor operates a small pilot stage that directs pilot pressure to the main (second-stage) spool. The pilot pressure controls the position of the main spool. In addition to the spool-type shown in Fig. 2-95, there are several different configurations of first-stage pilot units (often referred to as fluid amplifiers). Figs. 2-96 and 2-97 show two of the most common two-stage valve designs. Each of these valves uses some type of internal feedback to communicate the main spool position to the pilot stage in order to provide precise control of the spool.

In addition to the internal feedback, servo systems usually employ external feedback circuitry to allow continuous sensing and correction of selected load parameters. These parameters include linear and angular position, linear or angular velocity, and acceleration and deceleration rates.

The feedback signal is generated by an electronic sensor or transducer. The signal is sent to the summing circuitry in the operational amplifier that controls the torque motor. There, it is compared with the input command signal. If the load parameter feedback matches the command signal, no adjustment is necessary; however, if they do not match, the amplifier issues an error signal to the torque motor. The torque motor corrects the first stage position, which causes the second stage to respond and move to a new, corrected position. This, in turn, corrects the sensed load parameter. The rate and accuracy of these corrections depend primarily on the gain settings of the operational amplifier.

Servo actuators can also be used for pressure control and flow-control valves.

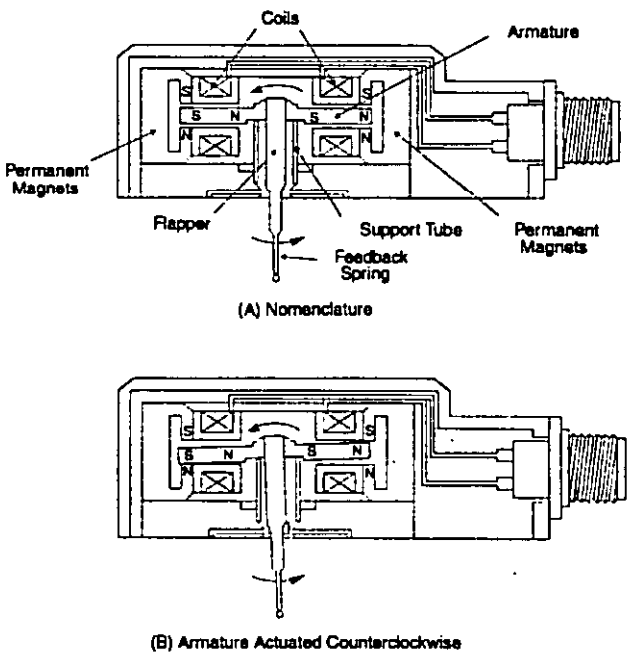

Courtesy of Vickers, Inc.

Figure 2-93. Servovalve Torque Motor (Ref. 5)

Downloaded from http://www.everyspec.com

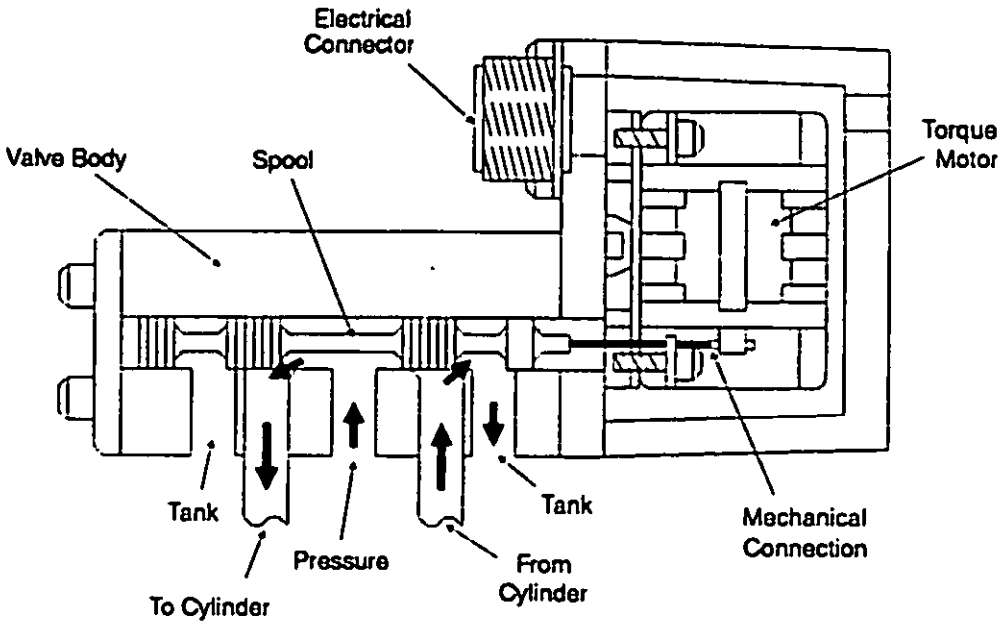

Courtesy of Vickers, Inc.

Figure 2-94. Single-Stage Servovalve (Ref. 5)

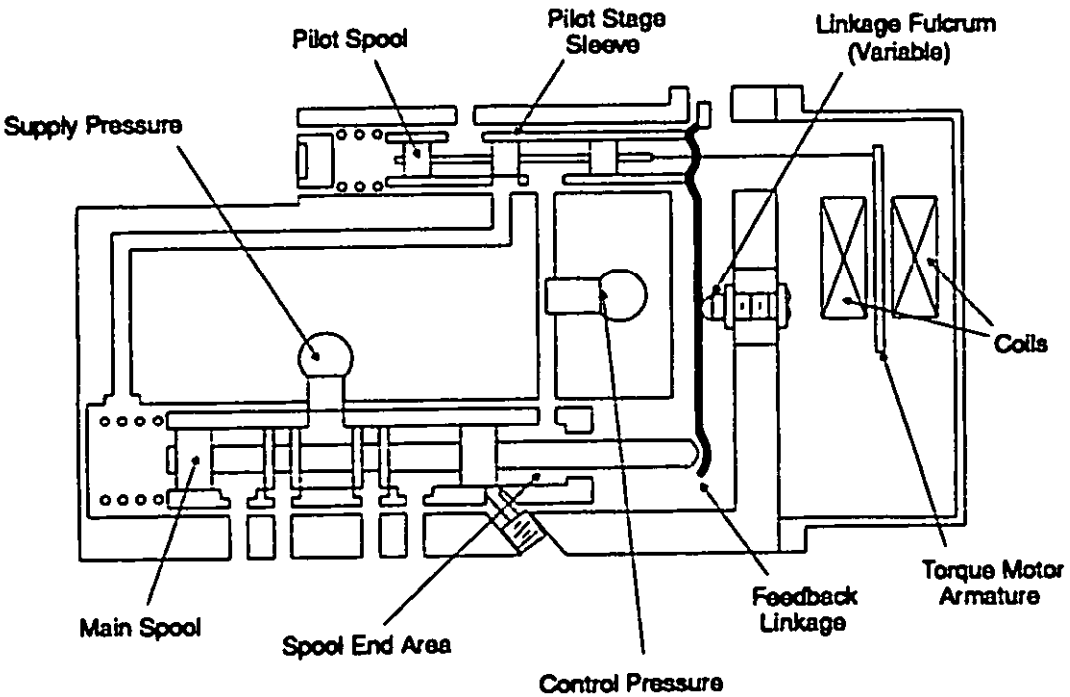

Courtesy of Vickers, Inc.

Figure 2-95. Two-Stage Servovalve (Ref. 5)

Downloaded from http://www.everyspec.com

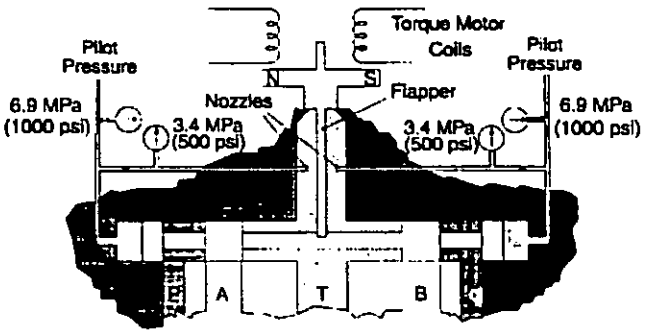

Courtesy of Vickers, Inc.

Figure 2-96. Flapper Nozzle Servovalve (Ref. 5)

2-9.2.7 Pilot Fluid Actuation

Air or oil can be used to provide power for the actuation of valves. Air can be used to activate single-stage valves or pilot valves on multistage units. Large flow rates can be controlled with air-actuated, pilot-operated, two-stage valves, which require relatively low-pressure signals.

One advantage of pilot fluid actuation is the long life of fluid components compared to the shorter life of electric components. This factor is particularly important in machines that must operate through many cycles in a relatively short period, as is the case with many production manufacturing machines.

2-9.3 VALVE MOUNTING

Hydraulic valves can be mounted in three different ways—in-line mounts, subplate mounts, and cartridge blocks. These three mounting options are discussed in the paragraphs that follow.

2-9.3.1 In-Line Mounts

Valves designed for in-line mounting have threaded fluid ports. The fluid fittings or pipes are connected directly into the ports. This type of connection is commonly used for valves in mobile equipment because of space and weight savings over the subplate-mounted valves. A disadvantage of this mounting method is the requirement to remove pipes or fittings to change the valve—an action that can contribute to external leakage and fluid contamination.

2-9.3.2 Subplate Mounts

If weight and space are not critical, as in industrial systems, subplate mounting is commonly used. Subplate-mounted valves do not have threaded ports. Instead the bottom of the valve is machined to a prescribed flatness and surface finish. The fluid ports are of a prescribed size and in a specified pattern and include recesses into which O-ring seals are installed. The valve is bolted onto a standard subplate that has been manufactured in accordance with ISO 4401 (Ref. 22). There are relatively few standard configurations. Typical subplate configurations for mounting directional control valves are shown in Fig. 2-98. Subplate mounting can also be used for pressure and flow-control valves.

Subplates offer the advantage of facilitating quick valve changes without the necessity of disturbing the threaded connectors. This feature also helps to prevent fluid leakage at the connectors and eliminates a source of fluid contamination.

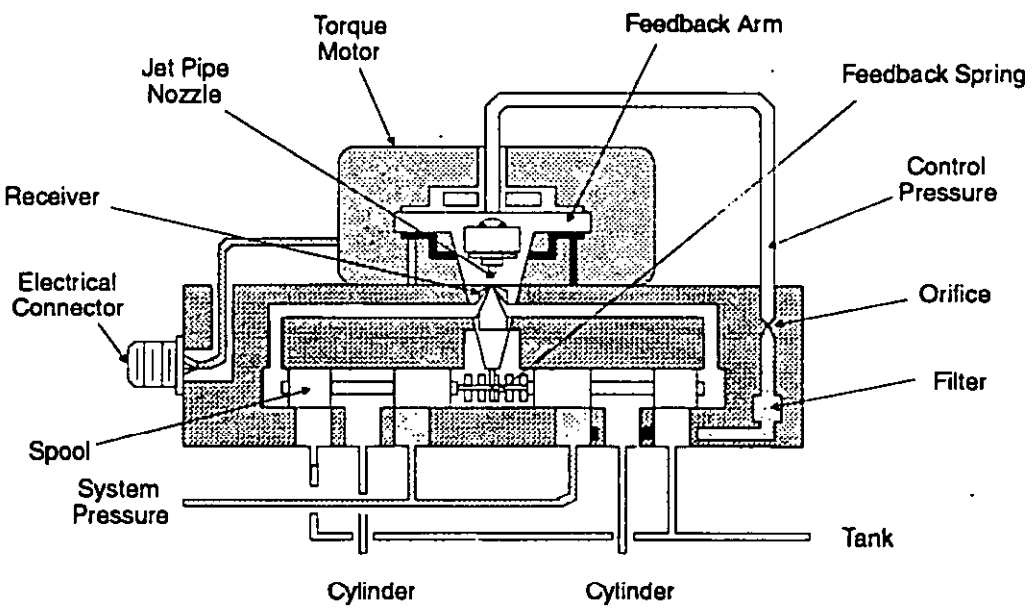

Courtesy of Vickers, Inc.

Figure 2-97. Jet Pipe Servovalve (Ref. 5)

Downloaded from http://www.everyspec.com

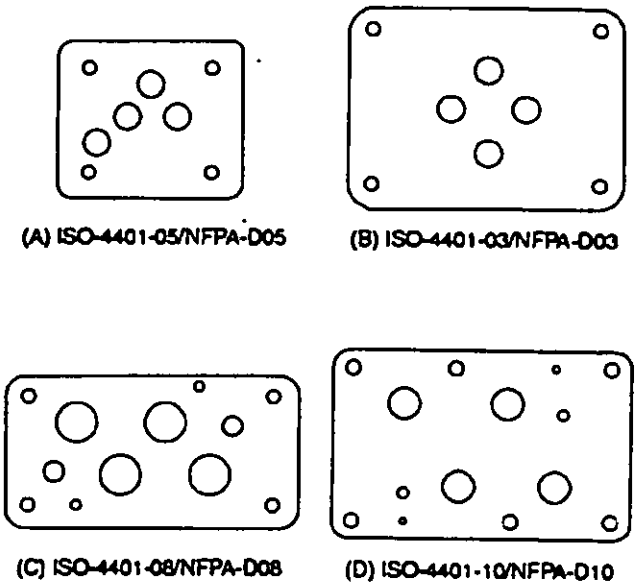

Figure 2-98. Standard Subplates for Directional Control Valves

2-9.3.3 Cartridge Blocks

A cartridge valve is an insert designed to be installed in a standard cavity in a manifold block. They can be either slip-in, poppet-type elements that operate in conjunction with other valves or screw-in elements that provide complete hydraulic valve functions.

Screw-in cartridge valves can perform the same functions as standard in-line- or subplate-mounted valves. The main advantage of these units is their ability to be installed in valve manifolds. They allow the entire control function of a complex fluid power system to be concentrated in a single, interconnected valve block instead of requiring numerous valves connected by lengths of pipe or tubing. This can be especially important in designing for survivability of combat vehicles (Ref. 23). Other advantages include improved reliability, higher pressure capability, reduced external leakage, and lower installed cost (Ref. 5). Fig. 2-99 shows several screw-in cartridge valve configurations.

2-10 HEAT EXCHANGERS

Heat is generated in all hydraulic systems. The inherent mechanical and thermodynamic inefficiencies of pumps and motors result in heat generation. Inefficient system designs, as well as high pressure drops across valves and internal leakage, are also high heat generators. Much of this heat is transferred to the hydraulic fluid and causes a rise in fluid temperature. Since all hydraulic fluids exhibit a limited temperature range over which the viscosity and lubricating characteristics are optimum, the heat must be dissipated to assure satisfactory operation. Some heat is removed from the system hardware and reservoir by dissipation to the environment. If this heat transfer is not sufficient to maintain the desired fluid temperature, it becomes necessary to provide heat exchangers to supplement the natural dissipation.

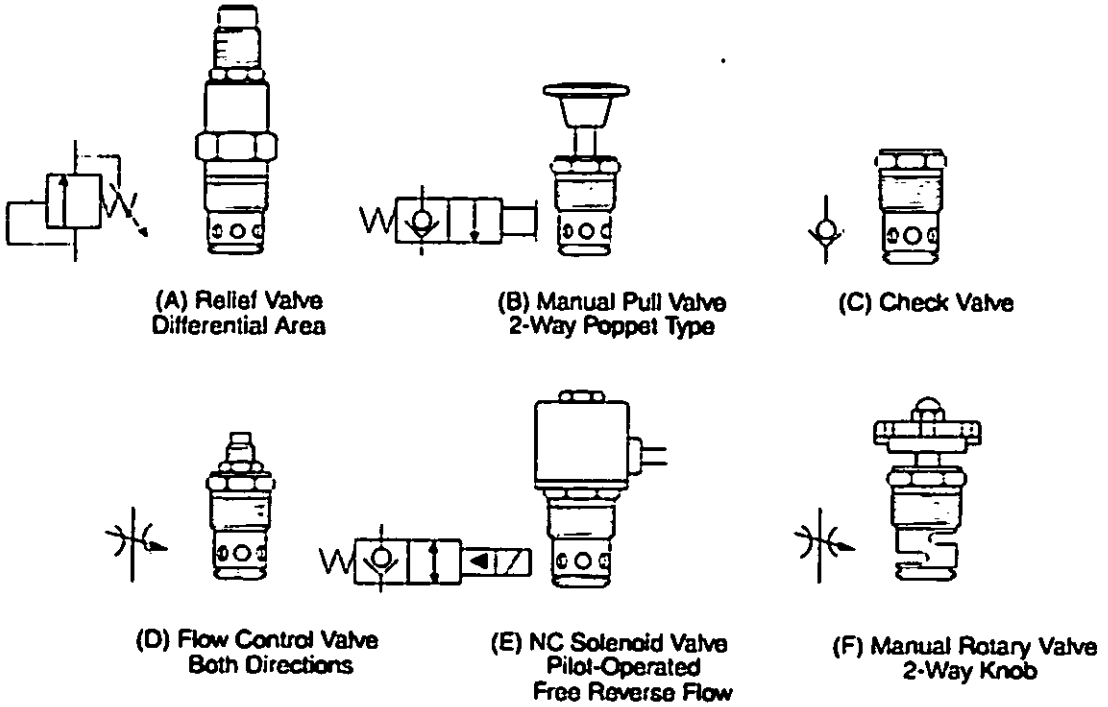

Courtesy of Vickers, Inc.

Figure 2-99. Examples of Screw-in Cartridge Valves (Ref. 5)

Downloaded from http://www.everyspec.com

The analysis of temperature control problems in a hydraulic system begins with an estimate of the total heat rejected by the system. This rejected heat is the direct result of inefficiencies due to system design, poor component selection, internal leakage, flow throttling, pipe friction, flow over relief or pressure-reducing valves, and pressure drops through flow control and directional control valves. Basically, any energy put into the fluid by the pump that does not do mechanical work manifests itself as heat. Stated another way, every pressure drop that does not produce mechanical work is a heat generator.

The heat generation rate q_1 is easily calculated from the pressure drop and flow rate across any device. When using SI units, the equation required is

$$q_1 = \Delta p Q, \text{ W} \tag{2-2}$$

where

q_1 = heat generation rate, W
Δp = pressure drop across the device, Pa
Q = flow rate through the device, m^3/s.

In the English system

$$q_1 = \frac{(42.4)\ (60)}{1714} \Delta p Q, \frac{\text{Btu}}{\text{h}} \tag{2-3}$$

where

q_1 = heat generation rate, Btu/h
Δp = pressure drop across the device, $lb/in.^2$
Q = flow rate through the device, gpm.

Pump inefficiencies also contribute to the overall heat generation in the system. This contribution is calculated from

$$q_p = pQ\left(\frac{1}{\eta_0} - 1\right), \text{ W} \tag{2-4}$$

where

q_p = heat generation due to pump inefficiencies, W
p = pump outlet pressure, Pa
Q = pump flow rate, m^3/s
η_0 = overall pump efficiency, dimensionless

or in the English system

$$q_p = \frac{(42.4)\ (60)}{1714} pQ\left(\frac{1}{\eta_0} - 1\right), \frac{\text{Btu}}{\text{h}} \tag{2-5}$$

where

q_p = heat generation due to pump inefficiencies, Btu/h
p = pump outlet pressure, $lb/in.^2$
Q = pump flow rate, gpm
η_0 = overall pump efficiency, dimensionless.

With this simplified approach, the total thermal energy absorbed by the fluid is the sum of the pump contribution and that of all pressure drops that do not result in mechanical work. The heat can be dissipated from the surfaces of the circuit components and if necessary removed by a heat exchanger.

As heat is generated through any pressure drop, the fluid temperature increases. This temperature rise ΔT can be calculated from

$$\Delta T = \frac{q_1}{c_p M}, \text{ K (R)} \tag{2-6}$$

where

ΔT = temperature rise, K (R)
c_p = specific heat, J/(kg·K) (Btu/(lbm·R))
M = mass flow rate, kg/s (lbm/h).

For common petroleum hydraulic fluids the heat rise can be estimated at approximately 0.42 deg C for every 700 kPa pressure drop. This value is about 0.75 deg F for every 100 $lb/in.^2$ pressure drop.

2-10.1 MODES OF HEAT TRANSFER

Heat can be removed from the system by all three of the basic modes of heat transfer: conduction, convection, and radiation.

2-10.1.1 Conduction

Thermal conduction is the transfer of heat through a gas, liquid, or solid by means of collisions or intimate contact between the molecules. The amount of heat transferred by conduction is given by Fourier's Law. For simple one-dimensional flow this law reduces to

$$q = kA\frac{\Delta T}{t}, \text{ W}\left(\frac{\text{Btu}}{\text{h}}\right) \tag{2-7}$$

where

q = rate of heat flow, W (Btu/h)
k = thermal conductivity of material, W/(m·K) ((Btu·ft)/(h·ft^2·R))
A = area normal to direction of flow, $m^2(ft^2)$
ΔT = temperature difference between warmer and cooler surfaces of the material, K (R)
t = thickness of material, m (ft).

More general forms of the conduction equation must be used if the heat flow is other than one dimensional.

2-10.1.2 Convection

Heat transfer by convection requires gross motion of liquid particles that involves the transport of regions of the liquid at different temperatures. Free, or natural, convection

Downloaded from http://www.everyspec.com

occurs when the liquid particles move because of density gradients established by temperature gradients. If the liquid is circulated by external means such as a fan or blower, the process is called forced convection. The convection heat transfer rate q is governed by a relation developed by Newton in which

$$q = hA\Delta T, \text{ W (Btu/h)} \qquad (2\text{-}8)$$

where

h = convective film coefficient, W/(m^2·K) (Btu/(h·ft^2·R))

A = area of surface exposed to the fluid and normal to heat flow direction, m^2 (ft^2)

ΔT = temperature difference between the fluid and the surface, K (R).

This relation actually defines the film coefficient h. Only in the most ideal situations can the film coefficient be computed. Empirical relations are often employed to estimate a value of h.

2-10.1.3 Radiation

Thermal radiation involves the transport of thermal energy by means of electromagnetic radiation. The amount of heat transferred by radiation depends on the relative configuration of the areas that exchange heat, their temperatures, and the nature of their surfaces. The governing relation is

$$q = F_A A\sigma (T_2^4 - T_1^4), \text{ W (Btu/h)} \qquad (2\text{-}9)$$

where

F_A = a factor that accounts for the geometric orientation of the surfaces and their emittances, dimensionless

σ = Stefan-Boltzmann constant = 5.699×10^{-8} W/(m^2·K^4) (0.1714×10^{-8} Btu/(h·ft^2·R^4))

T_2 = temperature of radiating surface, K (R)

T_1 = temperature of sink or receiving surface, K (R).

2-10.1.4 Overall Heat Transfer Coefficient

The contributions of conduction, convection, and radiation to net heat transfer can be combined by making use of the concept of the overall heat transfer coefficient U, which is defined by the relation

$$q = UA\Delta T_{total}, \text{ W(Btu/h)} \qquad (2\text{-}10)$$

where

U = overall heat transfer coefficient, W/(m^2·K) (Btu/(h·ft^2·R))

A = heat transfer area, m^2 (ft^2)

ΔT_{total} = total temperature difference across which the heat is being transferred, K (R).

The overall coefficient is a measure of the thermal conductance of the system

$$UA = \frac{1}{R_1 + R_2 + \cdots + R_i}, \frac{\text{W}}{\text{K}} \text{ (Btu/(h·R))} \qquad (2\text{-}11)$$

where

R_i = the thermal resistance of system component i, K/W ((h·R)/Btu).

Consider for example the case of a single pass counterflow shell and tube heat exchanger shown in Fig. 2-100(A). The cross section of the heat exchanger in Fig. 2-100(B) shows the heat transfer situation that exists in this type of heat exchanger. Under steady state conditions the amount of heat transfer between the two fluids is given by

$$q = h_{12}A(T_1 - T_2) = \frac{kA(T_2 - T_3)}{t} \qquad (2\text{-}12)$$

$$= h_{34}A(T_3 - T_4), \text{ W (Btu/h)}$$

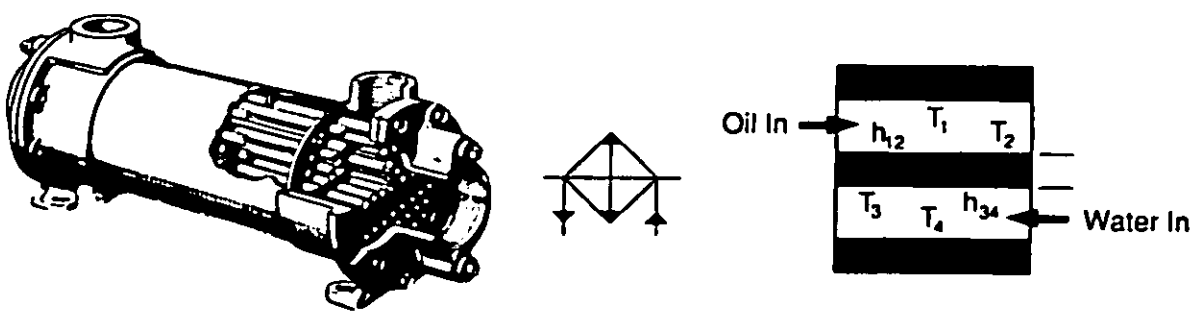

(A) Typical Configuration

(B) Heat Transfer and Temperature Distributions

Reprinted from *Fluid Power Design Handbook*, p. 31, by courtesy of Marcel Dekker, Inc.

Figure 2-100. Counterflow Heat Exchanger (Ref. 4)

Downloaded from http://www.everyspec.com

where

h_{12} = convective coefficient between the oil and the surface of the tube adjacent to the oil, W/(m^2·K) (Btu/(h·ft^2·R))

h_{34} = convective coefficient between the water and the surface of the tube adjacent to the water, W/(m^2·K) (Btu/(h·ft^2·R))

T_1 = oil inlet temperature, K (R)

T_2 = temperature of the surface adjacent to the oil, K (R)

T_3 = temperature of the surface adjacent to the water, K (R)

T_4 = water inlet temperature, K (R)

k = thermal conductivity of the tube wall separating the oil and water, W/(m^2·K) ((Btu·ft)/(h·ft^2·R))

t = thickness of the tube wall, m (ft)

A = heat transfer area, m^2 (ft^2).

The total temperature difference (ΔT_{total}) is $T_1 - T_4$. Expressing Eq. 2-12 as three simultaneous equations and solving for $T_1 - T_4$ gives

$$\Delta T_{total} = T_1 - T_4 = \frac{q}{A}\left(\frac{1}{h_{12}} + \frac{t}{k} + \frac{1}{h_{34}}\right), \text{K (R)}. \tag{2-13}$$

Solving this expression for q gives

$$q = \frac{A\Delta T_{total}}{\frac{1}{h_{12}} + \frac{t}{k} + \frac{1}{h_{34}}}, \text{W}\left(\frac{\text{Btu}}{\text{h}}\right). \tag{2-14}$$

Substituting this expression into Eq. 2-10 results in

$$U = \frac{1}{\frac{1}{h_{12}} + \frac{1}{k} + \frac{1}{h_{34}}}, \frac{\text{W}}{\text{m}^2\cdot\text{K}}\left(\frac{\text{Btu}}{\text{h}\cdot\text{ft}^2\cdot\text{R}}\right). \tag{2-15}$$

Additional factors, such as dirt and scale deposits, can contribute to the thermal resistance in heat exchangers and reduce their efficiencies. In such cases appropriate terms are added to the component resistances in Eq. 2-11.

2-10.2 TYPES OF COOLING SYSTEMS

In general, heat transfer in a hydraulic system involves some combination of the three modes of heat transfer. If the heat dissipated from the surfaces of the system is insufficient to maintain a satisfactory fluid temperature, a heat exchanger is required. Most heat exchangers for hydraulic fluids are either air-cooled or water-cooled.

2-10.2.1 Air-Cooled Heat Exchangers

Air is often used as the coolant in heat exchangers for mobile hydraulic systems or in stationary systems that generate moderate amounts of heat. A blower or fan is usually used to circulate the air across finned tubes through which the hydraulic fluid flows as shown in Fig. 2-101. Air-cooled units are limited to applications for which the desired hydraulic fluid outlet temperature is at least 6 deg C (10 deg F) above the dry bulb air temperature.

2-10.2.2 Water-Cooled Heat Exchangers

The use of water as a coolant is common practice in stationary systems. The film coefficient on the water side is generally the same order of magnitude as it is on the hydraulic fluid side. Therefore, water-cooled heat exchangers are usually shell-and-tube type where the heat transfer area on the cold side is approximately the same as it is on the hot side. Such an exchanger is shown in Fig. 2-100. It consists of a tube bundle within a shell. The tubes are baffled so that the coolant flow in the shell is perpendicular to the tube axis. Most shell-and-tube heat exchangers used in hydraulic systems are either single- or double-pass units. In a single-pass unit the two liquids generally flow in opposite directions. In a double-pass exchanger, the hydraulic fluid generally enters the same end that the water enters and leaves. Other configurations are shown in Fig. 2-102.

Water-cooled, shell-and-tube heat exchangers are compact and have a low initial cost. They can be used to obtain lower hydraulic fluid temperatures than can be obtained with the air-cooled exchangers. Limitations include the pos-

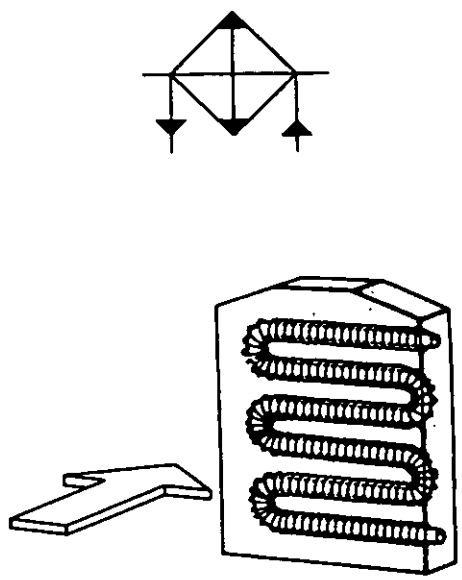

Reprinted from *Fluid Power Design Handbook*, p. 31, by courtesy of Marcel Dekker, Inc.

Figure 2-101. Air-Cooled Heat Exchanger (Ref. 4)

Downloaded from http://www.everyspec.com

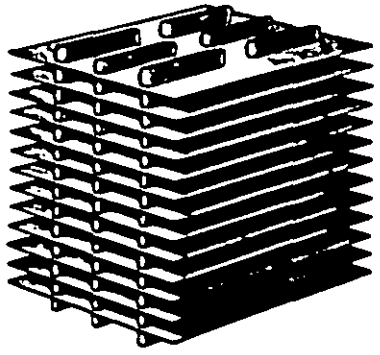

(A) Cross-Flow Design

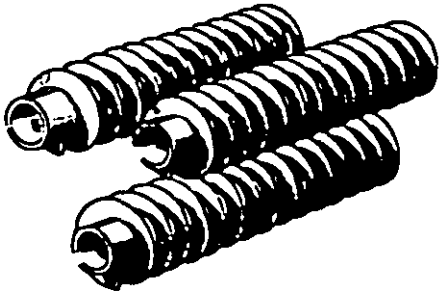

(B) Helical Fins

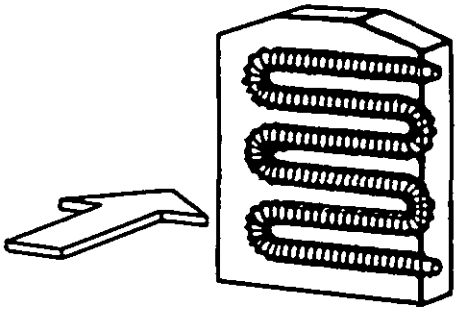

(C) Conventional Shell and Tube

Reprinted from *Fluid Power Design Handbook*, p. 31, by courtesy of Marcel Dekker, Inc.

Figure 2-102. Typical Heat Exchanger Designs (Ref. 4)

sibility of corrosion and the cost of a continuous water supply. Copper alloys are used in standard heat exchangers and special corrosion-resistant alloys are available. Removable tube bundles facilitate cleaning.

2-10.2.3 The Reservoir as a Heat Exchanger

If a reservoir is placed so that air flows freely around it, the cooling ability of the reservoir depends on the total area of contact of the fluid with the reservoir surface and on the temperature difference between the fluid and the surrounding air. The heat transfer rate from the tank can be calculated from

$$q = CA\Delta T, \mathrm{W}\left(\frac{\mathrm{Btu}}{h}\right) \qquad (2\text{-}16)$$

where

C = heat transfer coefficient, W/ (m^2·K) (Btu/(h·ft^2·R))
A = total fluid contact area, m^2 (ft^2)
ΔT = temperature difference, K (R).

The area of the base of the reservoir can be included in A only if the reservoir is far enough above the floor to allow free air circulation under it. For steel reservoirs the value of C is usually between 25 and 50 W/(m^2·K) (4.4 and 8.8 Btu/(h·ft^2·R)), but it can be increased significantly if forced air circulation is used.

2-10.3 FLUID HEATERS

When hydraulic systems are subjected to unprotected environments, it may be necessary to provide a fluid heater to keep the fluid viscosity at an acceptable level for start-up. Fig. 2-103 shows a typical electric immersion heater that can be used for this purpose. In industrial applications hot water or steam lines can be run through the reservoir. Heaters should always be thermostatically controlled to prevent overheating the oil.

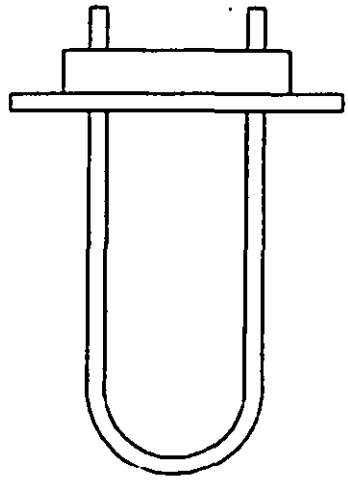

Figure 2-103. Electric Immersion Heater

Downloaded from http://www.everyspec.com

2-11 HYDRAULIC FLUID CONDUCTORS

2-11.1 HOSE, TUBING, AND PIPE

The design of the liquid conductors is just as important as the design of other components of a hydraulic system. The hydraulic piping contains the hydraulic fluid and conducts it from one part of the system to another; therefore, inadequate attention to piping design can lead to poor system operating characteristics and low efficiency.

Hydraulic piping systems are usually constructed from three types of fluid conductors: pipe, tubing, and flexible hose. Hose is used to accommodate relative movement between components. Most of the stationary piping, however, is either tubing or pipe. The advantages of tubing include better appearance, greater flexibility, better reusability, fewer fittings, and less leakage. The principal advantage of pipe is its relatively low cost.

When specifying fluid conductors for particular applications, both the inside diameter and the pressure capability of the conductor are important. Unfortunately, standardization among the different conductor types is totally absent. For example, piping is specified by some nominal size (1 in., 1 1/2 in., etc.) and by the term "schedule" that is associated with the wall thickness (and consequently the pressure capability) of the pipe. Table 2-2 shows typical sizing for steel pipe. The outside diameter for any specific nominal size is constant, regardless of the schedule. Tubing, on the other hand, is specified by its outside diameter and its wall thickness. As with pipe, the pressure capability of the tubing depends on the tensile strength of the material and the wall thickness. Table 2-3 lists some typical dimensions for steel tubing.

Hydraulic hoses are specified by their inside diameter and by their design designator in accordance with SAE J517 (Ref. 24). All hydraulic hoses are designated as 100RX; the X represents the SAE J517 section reference. Table 2-4 lists some examples of the maximum pressure requirements of SAE J517 100R series hoses. Fig. 2-104 illustrates the construction features of some hose types.

2-11.2 HOSE, TUBING, AND PIPE FITTINGS

Pipe and tubing fittings can be either threaded or permanent. Permanent fittings are attached in a variety of ways, including various forms of brazing, welding, swaging, and adhesive bonding. Swaging involves the mechanical deformation of the conductor, the fitting, or both to achieve mechanical gripping. Numerous swaging techniques are available, including internal and external swaging and single, double, or triple groove swaging. In the external swaging method the fitting is placed over the prepared end of the conductor and a mechanically or hydraulically operated die is used to deform the fitting radially into the conductor. One or more radial deformations (grooves) are used to ensure reliable mechanical gripping as well as a complete liquid seal.

In the internal swaging method, the fitting, which has radial grooves machined into its inside diameter, is carefully positioned over the end of the tube. A die is then inserted into the tube and rotated to deform the tube material outward into the grooves in the fitting. This method is more difficult to perform successfully than the external method because the location of the fitting and the insertion depth of the die are critical. An error in the insertion depth results in the deformation rings of the conductor material missing the grooves in the fitting.

Both of these swaging methods are reliable when performed properly. Improper performance, which usually is either too much or too little deformation, can result in a failure of the connection. Insufficient deformation can allow the fittings to slide on the conductor, whereas excessive

TABLE 2-2. EXAMPLE OF PIPE SIZING

NOMINAL PIPE SIZE		SCHEDULE	OUTSIDE DIAMETER		INSIDE DIAMETER		WALL THICKNESS	
mm	in.		mm	in.	mm	in.	mm	in.
3.18	1/8	40	10.3	0.405	6.8	0.269	1.73	0.068
		80	10.3	0.405	5.5	0.215	2.41	0.095
6.35	1/4	40	13.7	0.540	9.2	0.364	2.24	0.088
		80	13.7	0.540	7.7	0.302	3.02	0.119
12.70	1/2	40	21.3	0.840	15.8	0.622	2.76	0.109
		80	21.3	0.840	13.9	0.546	3.73	0.147
19.05	3/4	40	26.7	1.050	20.9	0.824	2.87	0.113
		80	26.7	1.050	18.8	0.742	3.91	0.154
25.40	1	40	33.4	1.315	26.6	1.049	3.38	0.133
		80	33.4	1.315	24.3	0.957	4.55	0.179
38.10	1 1/2	40	48.3	1.900	40.9	1.610	3.68	0.145
		80	48.3	1.900	38.1	1.500	5.08	0.200
50.80	2	40	60.3	2.375	52.5	2.067	3.91	0.154
		80	60.3	2.375	49.3	1.939	5.54	0.218

Downloaded from http://www.everyspec.com

TABLE 2-3. EXAMPLE OF STEEL TUBING SIZING

OUTSIDE DIAMETER		WALL THICKNESS		INSIDE DIAMETER	
mm	in.	mm	in.	mm	in.
3.18	1/8	0.71	0.028	1.75	0.069
		0.81	0.032	1.55	0.061
6.35	1/4	0.89	0.035	4.57	0.180
		1.24	0.049	3.86	0.152
12.70	1/2	0.89	0.035	10.92	0.430
		1.24	0.049	10.21	0.402
19.05	3/4	1.24	0.049	16.56	0.652
		1.65	0.065	15.75	0.620
25.40	1	1.24	0.049	22.91	0.902
		1.65	0.065	22.10	0.870
38.10	1 1/2	1.65	0.065	34.80	1.370
		2.11	0.083	33.88	1.334
50.80	2	1.65	0.065	47.50	1.870
		2.11	0.083	46.58	1.834

deformation can cause stress risers in the conductor that could ultimately fatigue and crack or break off completely.

Another method used to join tubing or piping sections as well as install fittings involves the use of fittings that are chilled in liquid before installation. These items are made from a nickel titanium alloy. The inside diameter (ID) of the fittings is slightly smaller than the outside diameter (OD) of the conductor on which it is to be installed. The alloy is easily deformed at cryogenic temperatures. It will retain any imposed deformation as long as it remains at the low temperature, but it returns to its original dimension when warmed to room temperature.

The fitting is immersed in liquid nitrogen and chilled to −196°C (−320°F). While still immersed, a mandrel is pulled through the fitting to expand its ID to about 5% greater than the OD of the conductor. It is then quickly installed on the conductor and allowed to warm. As it warms, it returns to its original ID, which results in an extremely strong and leak-free installation.

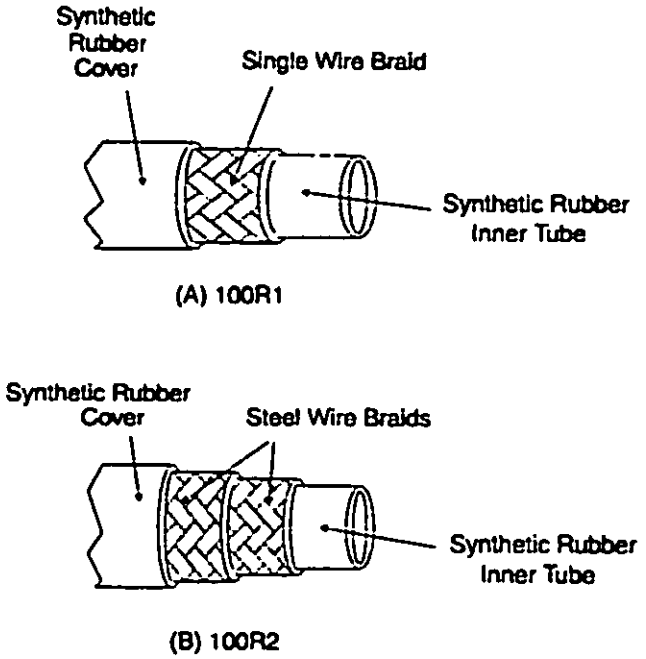

Figure 2-104. SAE 100R Series Hoses

TABLE 2-4. EXAMPLES OF SAE J 517 100R SERIES HOSE (Ref. 24)

NOMINAL HOSE SIZE in.*	MAXIMUM OPERATING PRESSURES, MPa, (in.²/s)					
	100R1	100R2	100R5	100R8	100R10	100R11
1/4	19.0	34.5	20.7	34.5	60.3	77.6
	(2750)	(5000)	(3000)	(5000)	(8750)	(11250)
1/2	13.8	24.1	12.1	24.1	43.1	51.7
	(2000)	(3500)	(1750)	(3500)	(6250)	(7500)
3/4	8.6	15.5	N/A**	15.5	34.5	43.1
	(1250)	(2250)	N/A	(2250)	(5000)	(6250)
1	6.9	13.8	N/A	13.8	27.6	34.5
	(1000)	(2000)	N/A	(2000)	(4000)	(5000)
1 1/2	3.4	8.6	N/A	N/A	8.6	20.7
	(500)	(1250)	N/A	N/A	(1250)	(3000)
2	1.9	7.8	N/A	N/A	17.2	20.7
	(275)	(1125)	N/A	N/A	(2500)	(3000)

*Hose sizes specified in inches in SAE J 517
**Not available

Reprinted with permission from SAE J 517 © 1991 by Society of Automotive Engineers, Inc.

Downloaded from http://www.everyspec.com

Threaded-pipe-fitting techniques include tapered pipe threads, flanges, SAE O-ring ports, and straight-thread ports with metal seals. Nonthreaded tube fittings can be of three types: flare, self-flare, or flareless. Flare fittings are illustrated in Fig. 2-105, and typical flareless fittings are shown in Fig. 2-106. Self-flare fittings incorporate a wedge-shaped sleeve, which enlarges the tube ending when the nut is tightened.

Hose fittings are either permanent or reusable. High-pressure, permanent fittings are factory assembled on the hose. Reusable fittings are available with pressure ratings up to 34,475 kPa (5,000 psi). Self-sealing couplings are sometimes used with hose in hydraulic piping systems. The four basic self-sealing types—double poppet, sleeve and poppet, slide-seal, and double-rotating ball—are illustrated in Fig. 2-107.

2-11.3 PRESSURE LOSSES IN PIPELINES

Pressure losses in pipelines result from the fluid viscosity, friction between the fluid and the pipe, and changes in flow direction.

Friction loss is a function of several variables, the most important of which is the fluid velocity through the pipeline.

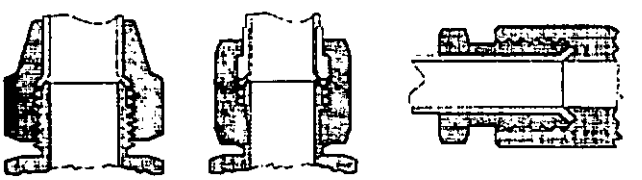

(A) Two-Piece Type (B) Three-Piece Type (C) Inverted-Flare Type

Reprinted from *Machine Design*, 27 September 1979, p. 122.

Figure 2-105. Typical Flare Fittings for Hydraulic Tubing (Ref. 25)

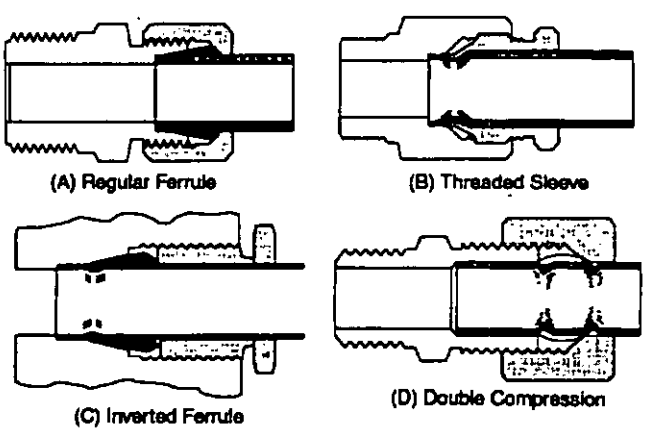

Reprinted from *Machine Design*, 27 September 1979, p. 125.

Figure 2-106. Typical Flareless Fittings for Hydraulic Tubing (Ref. 25)

In the SI system velocity v can be calculated by

$$v = \frac{Q}{A}, \frac{\text{m}}{\text{s}} \tag{2-17}$$

where

Q = flow rate, m^3/s
A = cross-sectional (flow) area of the conduit, m^2.

In the English system this is expressed as

$$v = \frac{Q}{3.12A}, \frac{\text{ft}}{\text{s}} \tag{2-18}$$

where

Q = flow rate, gpm
A = cross-sectional (flow) area of the conduit, $in.^2$
3.12 = conversion factor.

If the flow is laminar, the pressure loss Δp can be determined from

$$\Delta p = \gamma h_L, \text{ Pa} \tag{2-19}$$

or in the English system of units

$$\Delta p = \frac{\gamma h_L}{144}, \text{ psi} \tag{2-20}$$

where

$$h_L = \frac{32\mu L v}{\gamma D^2}, \text{ (N·m)/N ((ft·lb)/lb)} \tag{2-21}$$

h_L = energy loss, N·m/N ((ft·lb)/lb) (usually expressed simply as m or ft)
μ = absolute viscosity, Pa·s ((lb·s)/ft^2)
L = pipe length, m (ft)
D = pipe diameter, m (ft)
v = flow velocity, m/s (ft/s)
γ = specific weight, N/m^3 (lb/ft^3).

For turbulent flow the value of h_L is calculated from

$$h_L = f\left(\frac{L}{D}\right)\left(\frac{v^2}{2g}\right), \text{ m (ft)} \tag{2-22}$$

where

f = friction factor, dimensionless
g = acceleration due to gravity, m/s^2 (ft/s^2).

Determining the value of the friction factor f for turbulent flow is inexact at best because of the erratic nature of such flows. Numerous empirical equations are listed in the literature, but the most common approach to determining f is to use a Moody diagram, which is a graphical approach based on the Reynolds number of the flow and the roughness of

Downloaded from http://www.everyspec.com

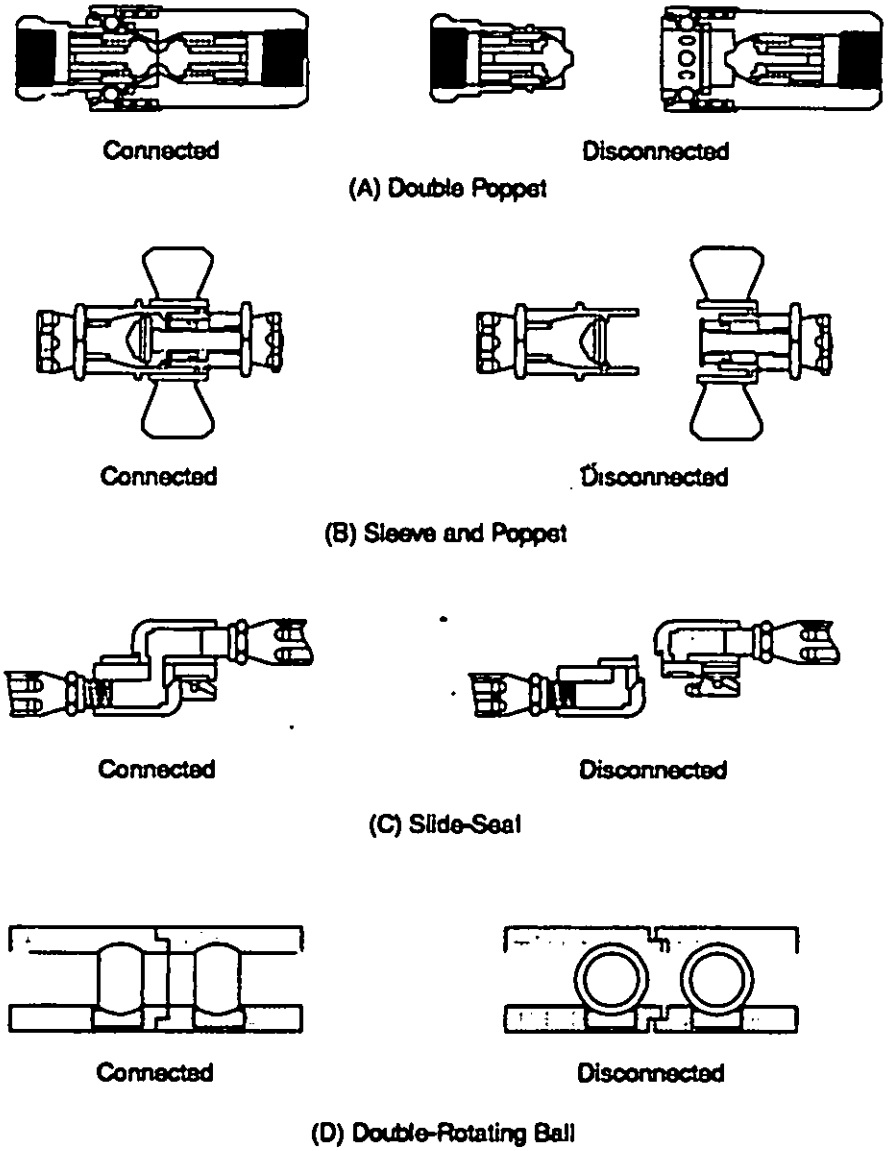

Reprinted from *Machine Design*, 27 September 1979, p.126.

Figure 2-107. Typical Self-Sealing Couplings for Hydraulic Hose (Ref. 25)

the interior surface of the conductor. The complexity of this technique makes further discussion inappropriate for this handbook. The reader is referred to standard fluid mechanics texts, such as Ref. 26, for details of the method.

Pressure losses in pipelines can be estimated using tables similar to Table 2-5. These tables, which are available from pipe and tubing manufacturers, show the pressure loss per unit length of pipe based on the flow velocity through the pipe. The tables are available for a variety of fluids and pipe or tubing materials.

To find the pressure loss through a given length of pipe using this table, find the pressure loss per meter of pipe at the specified flow velocity and then multiply that number by the total length of pipe in the circuit. For example, 10 m of 1/2-in. Schedule 40 pipe through which fluid is flowing at 6.1 m/s would cause a total pressure loss of 509 kPa. (Note: Nominal pipe sizes are always shown in inches, even though the table may include SI units for other parameters.)

When tables similar to Table 2-5 are used to estimate pressure losses in the conduits, accompanying tables are commonly available to estimate the pressure losses in elbows, tees, and other types of fittings as well as bends and some types of valves. The values in such tables are termed "equivalent length" values because they are an estimate of the length of conduit that would cause the same pressure loss as the fitting. To estimate the total pressure loss in the circuit, the equivalent length of all fittings, bends, valves, etc., is summed and added to the actual length of conduit. The resulting length is multiplied by the pressure loss per unit length found in the pressure loss table.

Downloaded from http://www.everyspec.com

TABLE 2-5. PRESSURE LOSSES IN PIPES

NOMINAL PIPE SIZE in.	FLOW SPEED, m/s (ft/s)			
	1.52 (5)	3.05 (10)	6.1 (20)	9.15 (30)
	PRESSURE LOSS, kPa/m (psi/ft)			
1/8 Schedule 40	34.4 (1.52)	68.8 (3.04)	137.5 (6.08)	206.3 (9.12)
1/4 Schedule 40	18.8 (0.83)	37.6 (1.66)	75.1 (3.32)	200.0 (8.84)
3/8 Schedule 40	10.2 (0.45)	20.4 (0.90)	67.4 (2.98)	136.9 (6.05)
1/2 Schedule 40	6.3 (0.28)	12.9 (0.57)	50.9 (2.25)	102.2 (4.52)
3/4 Schedule 40	3.6 (0.16)	7.2 (0.32)	35.5 (1.57)	71.9 (3.18)
1 Schedule 40	2.3 (0.10)	7.7 (0.34)	26.2 (1.16)	53.2 (2.35)

2-12 SHOCK ABSORBERS

Fluid power is often used to cushion or absorb the impact caused when a moving mass must be stopped. If the energy of the moving mass is to be dissipated, a shock absorber is used. The working fluid in a shock absorber can be a liquid, a gas, or a combination of the two. Shock absorbers are available in a variety of different designs and configurations.

Most shock absorbers, called nonregenerative shock absorbers, dissipate all of the energy of the moving mass. They rely on springs or other mechanisms to return the shock absorber to an equilibrium position. Common automobile shock absorbers are an example. However, there is an important class of shock absorbers, called hydropneumatic mechanisms, that use pneumatic power to return the shock absorber to equilibrium. The operating principles of hydraulic shock absorbers and hydropneumatic mechanisms are discussed in the paragraphs that follow.

2-12.1 HYDRAULIC SHOCK ABSORBERS

A hydraulic shock absorber is normally used to stop a moving mass completely in a uniform manner. The shock absorber accomplishes the "smooth" deceleration by metering hydraulic fluid through orifices that converts work and kinetic energy into heat, which is dissipated. The metering orifices may be fixed in size or adjustable so that the deceleration rate may be varied. A cross-sectional sketch of a typical shock absorber is shown in Fig. 2-108. When a moving mass strikes the bumper, the piston moves inward. The resisting pressure behind the piston closes the check valve. The piston then pushes the liquid through the metering orifices from the inner high-pressure chamber to the outer low-pressure chamber.

The resistance to the liquid flow caused by the orifices acts against the piston to slow its motion. As the piston moves inward, it progressively blocks the orifices, increases the resistance, and uniformly decelerates the mass.

Most of the recent advances in shock absorber technology can be attributed to efforts to reduce helicopter crew injuries resulting from crashes in which the structural integrity of the airframe is maintained. These crashes frequently result in disabling spinal injuries. The frequency and severity of such injuries can be reduced by energy-absorbing crew seats.

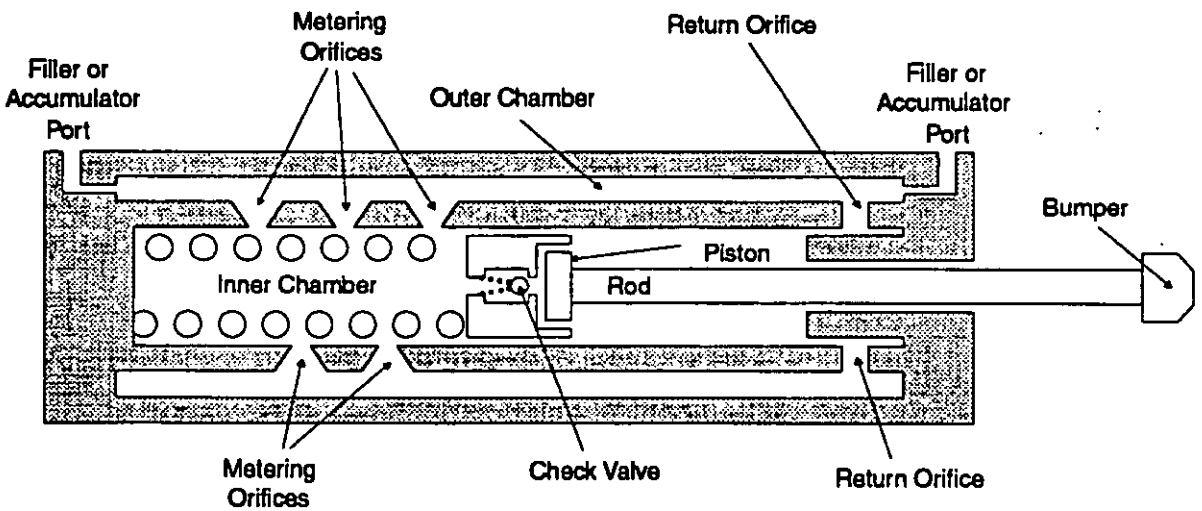

Figure 2-108. Cross-Sectional Sketch of a Typical Shock Absorber

Downloaded from http://www.everyspec.com

Early attempts to use shock absorbers to absorb the impact energy involved the use of fixed load energy absorbers (FLEAs). These devices were simple hydraulic shock absorbers designed to provide a survivable deceleration for the 50th percentile seat occupant weight. Because of the design, injury was still likely for occupants whose weight differed significantly from the 50th percentile.

An improvement to the FLEA concept was the variable load energy absorber (VLEA). This device contained variable control orifices that controlled the stroking rate of the shock absorber. The orifice was adjusted by selecting the occupant's weight on a control mechanism.

The next step in injury prevention was to provide a mechanism that would automatically adjust to the weight of the seat occupant. This device—termed the acceleration-sensing automatic variable load energy absorber (ASAVLEA)—uses a relief valve built into the head of the shock absorber to restrict or increase the flow of fluid between the chambers in the shock absorber. (Ref 27)

All three devices—FLEA, VLEA, and ASAVLEA—are currently used on helicopter seating systems along with a variety of mechanical-deformation-type energy absorbers.

2-12.2 HYDROPNEUMATIC SHOCK ABSORBERS

A hydropneumatic shock absorber works on essentially the same principle as the hydraulic shock absorber except that both a liquid and a gas are used as the working fluids. A simplified sketch of a hydropneumatic mechanism is shown in Fig. 2-109. As the mass to be stopped drives the piston inward, liquid metering through the orifices and compression of the gas bring the mass to a stop. The compressed gas then expands and returns the piston to the starting position. There are numerous variations of the hydropneumatic shock absorber. Many designs have a separate cylinder or container for the gas. Hydropneumatic configurations similar to that shown in Fig. 2-105 are frequently used in aircraft landing gear struts and are referred to as oleo shock absorbers or oleo struts. Artillery recoil mechanisms, an important application of hydropneumatic shock absorbers, frequently use separate cylinders for the gas and the liquid, and several methods of driving the piston into the gas cylinder are used. Fig. 2-110 shows a simplified sketch of a recoil mechanism with separate pistons for each cylinder being driven by the same moving mass.

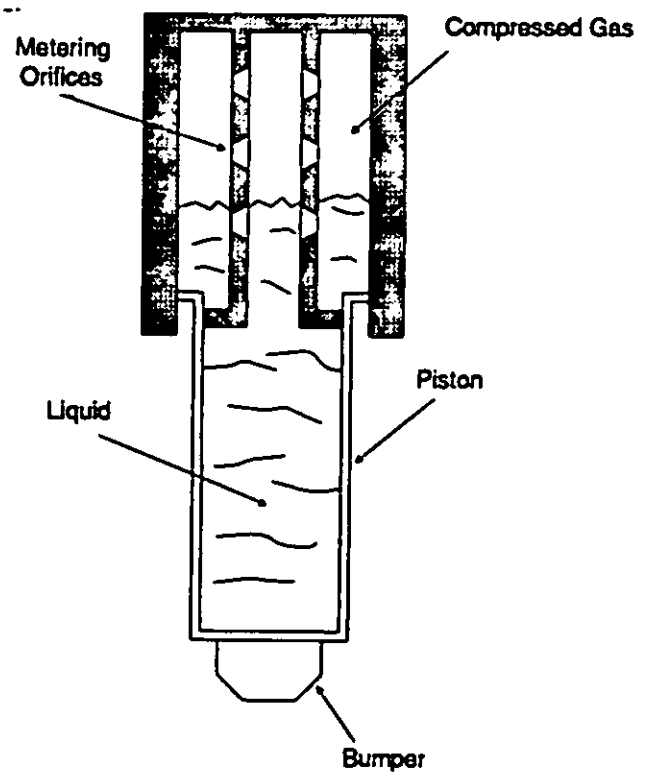

Figure 2-109. Sketch of Hydropneumatic Shock Mechanism

2-13 LIQUID SPRINGS

A liquid spring is a regenerative shock absorber that stops a moving mass and stores the energy of the mass in the liquid. A liquid spring depends on the compressibility or bulk modulus (inverse of compressibility) of the liquid for its action. A liquid with a high bulk modulus is confined in a

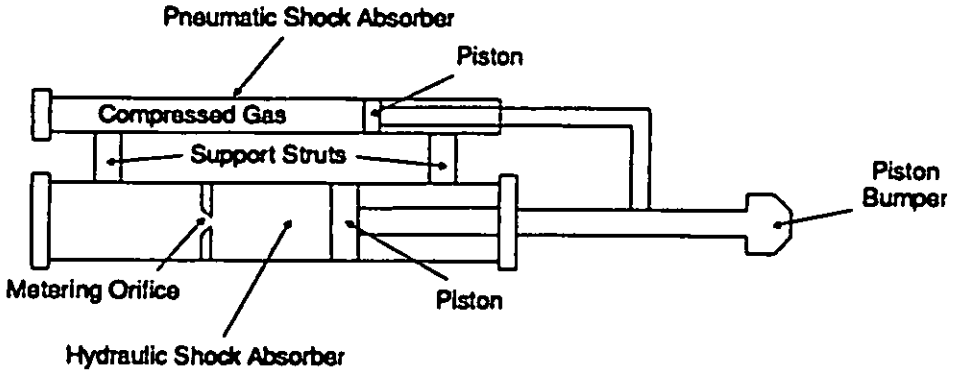

Figure 2-110. Sketch of Hydropneumatic Recoil Mechanism

Downloaded from http://www.everyspec.com

cylinder. When a ram is pushed into the cylinder, the liquid is compressed and exerts a strong return force on the cylinder ram. Liquid springs provide high load-absorbing capacities in small packages. A single liquid spring can provide as much load-absorbing capacity as roughly 30 coil springs of the same length and diameter. They can be designed to reciprocate by providing little or no flow restriction or to act as a shock absorber or damper by restricting the flow with orifices in the piston. Disadvantages include high cost and sealing of the resulting high pressures. Thus loads must be high before a liquid spring becomes practical.

REFERENCES

1. F. D. Norvelle, *Fluid Power Technology*, West Publishing Company, St. Paul, MN, 1992.
2. James Sullivan, *Fluid Power Theory and Applications*, 3rd Ed., Prentice Hall, Inc., Englewood Cliffs, NJ, 1989.
3. Anthony Esposito, *Fluid Power With Applications*, 2nd Ed., Prentice Hall, Inc., Englewood Cliffs, NJ, 1988.
4. Frank Yeaple, *Fluid Power Design Handbook*, Marcel Dekker, Inc., New York, NY, 1990.
5. *Industrial Hydraulics Manual*, 2nd Ed., Vickers, Inc., Rochester Hills, MI, 1989.
6. ISO 1219-76, *Fluid Power Systems and Components—Graphic Symbols*, International Organization for Standardization, Stockholm, Sweden, 1978.
7. *Industrial Hydraulics Technology*, Parker Fluid Power, Parker Hannifin Corporation, Cleveland, OH, 1986.
8. Raymond P. Lambeck, *Hydraulic Pumps and Motors, Selection and Application for Hydraulic Power Control Systems*, Marcel Dekker, Inc., New York, NY, 1983.
9. Charles S. Hedges, *Industrial Fluid Power, Volume 1*, 3rd Ed., Womack Educational Publications, Dallas, TX, 1984.
10. Louis R. Hathaway, Ed., *Fundamentals of Service, Hydraulics*, 4th Ed., Deere and Company, Moline, IL, 1987.
11. H. E. Merrit, *Hydraulic Control Systems*, John Wiley and Sons, Inc., New York, NY, 1967.
12. IMO Delaval, *Rotary Pump Handbook*, Bulletin IM 3000 R4, IMO Delaval, Inc., Monroe, NC, 1987.
13. SAE J744, *Hydraulic Power Pumps*, Society of Automotive Engineers, Warrendale, PA, 1980.
14. Catalog 89A, *Solutions for Factory Automation*, PHD, Inc., Fort Wayne, IN, 1988.
15. John G. Eleftherakis, *Hydraulic System Analysis for Critical Volume Reservoir (CVR) Design*, FPRC Report No. 89-AF-1, Fluid Power Research Center (FPRC), Oklahoma State University, Stillwater, OK, for the US Army Materiel Systems Analysis Activity, Aberdeen Proving Ground, MD, June 1989.
16. MIL-F-8815, *Filter and Filter Elements, Fluid Pressure, Hydraulic Line, 15 Micron Absolute and 5 Micron Absolute, Type II System General Specification*, 27 September 1976.
17. ISO 4572-81, *Hydraulic Fluid Power Filters Multipass Method for Evaluating Filtration Performance*, International Organization for Standardization, Stockholm, Sweden, 1981.
18. *Filtration Products From Schroeder*, 4th Ed., Schroeder Brothers Corporation, McKees Rocks, PA, February 1990.
19. ISO 2943-74, *Hydraulic Fluid Power Filter Elements Verification of Material Compatibility With Fluids*, International Organization for Standardization, Stockholm, Sweden, 1974.
20. William A. Neese, *Aircraft Hydraulic Systems*, 3rd Ed., Krieger Publishing Company, Malabar, FL, 1991.
21. *An Introduction to Rupture Disk Technology*, BS&B Safety Systems, Tulsa, OK, 1988.
22. ISO 4401-80, *Hydraulic Fluid Power Four-Port Directional Control Valves—Mounting Surfaces*, International Organization for Standardization, Stockholm, Sweden, 1980.
23. F. D. Norvelle, *Hydraulic System Survivability Enhancement for Military Combat Vehicles*, FPRC Report No. 81-AF-1, Fluid Power Research Center, Oklahoma State University, Stillwater, OK, for the US Army Materiel Systems Analysis Activity, Aberdeen Proving Ground, MD, June 1981.
24. SAE J517, *Hydraulic Hose*, Society of Automotive Engineers, Warrendale, PA, 1982.
25. "Conductors, Fluids, and Conditioners", *Machine Design*, 121-8 (27 September 1979).
26. Robert L. Mott, *Applied Fluid Mechanics*, 3rd Ed., Charles E. Merrill Publishing Company, Columbus, OH, 1989.
27. J. C. Warrick and J. W. Coltman, *Design and Development of an Automatically Controlled Variable Load Energy Absorber*, Report No. NADC-82025-60, Simula, Inc., Tempe, AZ, March 1984.
28. *Design Engineers Handbook*, prepared by Parker Fluid Power, a division of Parker Hannifin Corporation, Cleveland, OH, 1979.

BIBLIOGRAPHY

Analyzing Hydraulic Systems, Parker Fluid Power, Parker Haniffin Corporation, Cleveland, OH, 1984.

J. E. Anders, *Industrial Hydraulics Troubleshooting*, McGraw-Hill Book Company, New York, NY, 1983.

Beta Industries, Inc., *Definition of Design Criteria for Energy Absorption Systems*, Report No. NADC-AC-

Downloaded from http://www.everyspec.com

7010, Naval Air Development Center, Warminster, PA, June 1970.

E. F. Brater and H. W. King, *Handbook of Hydraulics*, McGraw-Hill Book Company, New York, NY, 1982.

L. P. Domzalski, *Dynamic Performance of a Variable Load Energy Absorber*, Report No. NADC-80257-60, Naval Air Development Center, Warminster, PA, February 1982.

H. Dorr *et al.*, *The Hydraulic Trainer, Volume 2—Proportional and Servo Valve Technology*, Mannesmann Rexroth GmbH, Lohr am Main, Germany, 1986.

R. W. Fox and A. T. McDonald, *Introduction to Fluid Mechanics*, 3rd Ed., John Wiley & Sons, Inc., New York, NY, 1985.

J. E. Johnson, *Electrohydraulic Servo Systems*, Penton/IPC, Cleveland, OH, 1977.

D. McCloy and H. R. Martin, *Control of Fluid Power*, 2nd Ed., Ellis Harwood Limited, Chichester, England, 1980.

M. J. Pinches and J. G. Ashby, *Power Hydraulics*, Prentice-Hall International (UK) Ltd, Hemel Hempstead, Hertfordshire, England, 1988.

J. J. Pippenger, *Hydraulic Cartridge Valve Technology*, Amalgam Publishing Company, Jenks, OK, 1990.

J. J. Pippinger, *Zero Downtime Hydraulics*, Amalgam Publishing Company, Jenks, OK, 1989.

W. Reeves, *The Technology of Fluid Power*, Prentice-Hall, Inc., Englewood Cliffs, NJ, 1987.

I. Shames, *Mechanics of Fluids*, McGraw-Hill Book Company, New York, NY, 1962.

A. L. Simon, *Hydraulics*, 3rd Ed., John Wiley & Sons, Inc., New York, NY, 1986.

C. M. Svoboda, and J. C. Warrick, *Design and Development of Variable Load Energy Absorbers*, Report No. NADC-80257-60, Naval Air Development Center, Warminster, PA, June 1981.

M. J. Tonyan, *Electronically Controlled Proportional Valves*, Marcel Dekker, Inc., New York, NY, 1985.

W. Wolansky, and A. Akers, *Modern Hydraulics: The Basics at Work*, Merrill Publishing Company, Columbus, OH, 1988.

Dynamic Testing of Energy-Attenuating Devices, Phase Report, NADC-AC- 6905, Naval Air Development Center, Warminster, PA, October 1969.

Aircraft Crash Survival Design Guide, Volume IV—Aircraft Seats, Restraints, Litters, and Cockpit/Crew Delethalization, USAAVSCOM TR 89-D-22D, US Army Aviation Research and Technology Activity, Fort Eustis, VA, December 1989.

Downloaded from http://www.everyspec.com

CHAPTER 3
FLUID PROPERTIES, SIGNIFICANCE, AND TEST METHODS

The basic fluid properties are discussed in some detail. These properties are defined and their significance considering normal fluid power system operation is presented. Numerous test methods used to quantify or evaluate the properties are synopsized, and tables and graphs show the results of these procedures on representative fluids.

3-0 LIST OF SYMBOLS

A = area, m^2 (ft^2)
B_{so} = sonic bulk modulus, kPa (lb/in.^{2})
B_{ss} = adiabatic (isentropic) secant bulk modulus, kPa (lb/ft^2)
B_{st} = adiabatic (isentropic) tangent bulk modulus, kPa (lb/in.^{2})
B_{ts} = isothermal secant bulk modulus at gage pressure p and temperature t, kPa (lb/in.^{2})
$\bar{B}_{ts}$ = isothermal secant bulk modulus at pressure p and temperature t, kPa (lb/in.^{2})
$(\bar{B}_{ts})_{2p}$ = isothermal secant bulk modulus at pressure $2p$, kPa (lb/in.^{2})
B_{tt} = isothermal tangent bulk modulus at pressure p and temperature t, kPa (lb/in.^{2})
$(\bar{B}_{tt})_p$ = isothermal tangent bulk modulus at pressure p, kPa (lb/in.^{2})
$\bar{B}_{t1s}$ = isothermal secant bulk modulus at gage pressure p and temperature t_1, kPa (lb/in.^{2})
$\bar{B}_{t2s}$ = isothermal secant bulk modulus at gage pressure p and temperature t_2, Pa (lb/in.^{2})
$\bar{B}_{0s}$ = isothermal secant bulk modulus at zero gage pressure and temperature t, kPa (lb/in.^{2})
C_s = isentropic compressibility, $(kPa)^{-1}$ (ft^2/lb)
C_t = isothermal compressibility, $(kPa)^{-1}$ (ft^2/lb)
c = speed of sound, m/s (ft/s)
c_p = specific heat at constant pressure, kJ/(kg·°C) (Btu/(lbm·°F))
c_v = specific heat at constant volume, kJ/(kg·°C) (Btu/(lbm·°F)
D = pipe inside diameter, m (ft)
d = distance between layers, m (ft)
$E°$ = viscosity, Engler degrees
F = force, N (lb)
H = viscosity at 40°C (104°F) of a standard fluid of 100 viscosity index having the same viscosity at 100°C (212°F) as the fluid whose viscosity index is to be calculated, mm^2/s (ft^2/s)
k = constant for a given oil and temperature, kPa^{-1} (ft^2/lb)
L = viscosity at 40°C (104°F) of a standard fluid of 0 viscosity index having the same viscosity at 100°C (212°F) as the fluid whose viscosity index is to be calculated, mm^2/s (ft^2/s)
N = relative surface speed, cm/s (ft/s)
p = pressure, kPa (lb/in.^{2})
p_g = gage pressure, kPa (lb/in.^{2})
R = rate of shear, s^{-1}
R_n = Reynolds number, dimensionless
R_0 = reference shear rate, s^{-1}
S = shearing stress, Pa (lb/ft^2)
Sg = specific gravity, dimensionless
T = efflux time, s
t = temperature, K (R)
t_c = temperature, °C
t_f = temperature, °F
U = viscosity at 40°C (104°F) of the fluid whose viscosity index is to be calculated, mm^2/s (ft^2/s)
V_0 = initial volume, m^3 (ft^3)
v = fluid velocity, m/s (ft/s)
VI = viscosity index, dimensionless
VI_E = viscosity index extended, dimensionless
VTC = viscosity temperature coefficient, dimensionless
Z = fluid viscosity, mm^2/s (ft^2/s)
β = conversion factor obtained from Fig. 3-47, $°C^{-1}$ ($°F^{-1}$)
Γ = ratio of bulk moduli or ratio of specific heats, dimensionless
γ_s = specific weight of the subject fluid, kN/m^3, (lb/ft^3)
γ_w = specific weight of water at 4°C (39°F) = 9.80 kN/m^3 (62.4 lb/ft^3)
Δp = change in pressure, Pa (lb/ft^2)
ΔV = change in volume, m^3 (ft^3)
$(\delta V/\delta p)_s$ = rate of change of volume with pressure at constant entropy, m^3/kPa (ft^3/(lb/ft^2))
$(\delta V/\delta p)_t$ = rate of change of volume with pressure at constant temperature, m^3/kPa (ft^3/(lb/ft^2))
μ = absolute viscosity, Pa·s (lb·s/ft^2)
μ_e = absolute viscosity at atmospheric pressure, Pa·s (lb·s/ft^2)
μ_p = absolute viscosity at pressure p, Pa·s (lb·s/ft^2)
ν = kinematic viscosity, m^2/s (ft^2/s)
ρ = fluid density at pressure p and temperature t, kg/m^3 (slug/ft^3)
ρ_s = density of subject fluid, kg/m^3 (slug/ft^3)
ρ_w = density of water at 4°C (39°F) = 1000 kg/m^3 (1.94 slug/ft^3)

Downloaded from http://www.everyspec.com

ρ_0 = density at a specified reference temperature and pressure, kg/m^3 (slug/ft^3)

3-1 INTRODUCTION

The specific requirements of a hydraulic fluid are determined by the design of the hydraulic system and by the functions the system must perform. A liquid that is satisfactory as a hydraulic fluid in one application or system may be completely unsuitable in a second application or system. Therefore, when the properties required of a hydraulic fluid are being considered, it should be remembered that the relative importance of any one property will depend upon the hydraulic system, its use, and its environment.

The various properties that are important in the selection and use of hydraulic fluids are presented in this chapter. Some properties may be important in all liquids, whereas others have significance only in limited applications. Each property is discussed in relation to its function in a hydraulic system. The importance of each property is assessed, and methods for measuring each are given.

3-2 PHYSICAL PROPERTIES

3-2.1 VISCOSITY

Viscosity is one of the most important properties of a liquid from the standpoint of its performance in hydraulic systems. It is the resistance offered by a liquid to the relative motion of its molecules or the resistance a liquid offers to flow. Temperature is the most important variable affecting viscosity and must be stated in all viscosity data.

Viscosity is defined by Newton's Law: At a given point in a liquid, the shearing stress S is directly proportional to the rate of shear R, i.e.,

$$S = \mu R, \text{ Pa (lb/ft}^2\text{)} \qquad (3\text{-}1)$$

where

R = rate of shear, s^{-1}
S = shearing stress, Pa (lb/ft^2)
μ = absolute viscosity, Pa·s (lb·s/ft^2).

For the relative motion of two parallel layers of liquid, the shearing stress is

$$S = F/A, \text{ Pa (lb/ft}^2\text{)} \qquad (3\text{-}2)$$

where

F = force, N (lb)
A = area, m^2 (ft^2).

Also

$$R = v/d, \text{ s}^{-1} \qquad (3\text{-}3)$$

where

v = velocity, m/s (ft/s)
d = distance between the layers, m (ft).

Fig. 3-1 shows the relationship among the terms in Eqs. 3-2 and 3-3. By using Eqs. 3-2 and 3-3, Eq. 3-1 may be written as

$$\frac{F}{A} = \mu \frac{v}{d}, \text{ Pa (lb/ft}^2\text{)} \qquad (3\text{-}4)$$

or

$$\mu = \frac{Fd}{Av}, \text{ Pa·s (lb·s/ft}^2\text{)}. \qquad (3\text{-}5)$$

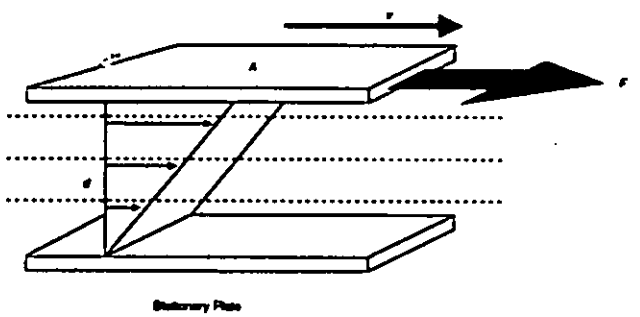

Figure 3-1. Velocity Distribution in a Liquid Between Two Parallel Plates

3-2.1.1 Significance of Viscosity

The single most important property of a hydraulic fluid is its viscosity. Various components within a hydraulic system have competing requirements as to high or low viscosity. High viscosity provides thick lubricating films and reduces internal leakage. Low viscosity results in less internal friction, smaller pressure losses in pipes and valves, and an increase in control action and component response. Thus a compromise in viscosity requirements must be made. The viscosity of the hydraulic fluid affects the response of system components, and because its sensitivity to temperature usually imposes limitations on the upper or lower operating temperature of any hydraulic system, viscosity must always be considered in design calculations.

3-2.1.2 Absolute Viscosity

The viscosity μ defined by Eq. 3-5 is the absolute, or dynamic, viscosity. If the International System of Units (SI) is used, the unit of absolute viscosity is the pascal·second. The poise is another commonly used unit. Because the poise is a rather large unit, the centipoise (cp) (one hundredth of a poise) is customarily used. One centipoise is equal to one millipascal·second. Pure water at a temperature of 20.2°C (68.4°F) has an absolute viscosity of one centipoise. If the English system of units (foot, pound, second) is used, the unit of absolute viscosity is pounds·second per square foot.

Downloaded from http://www.everyspec.com

3-2.1.3 Kinematic Viscosity

The ratio of the absolute viscosity of a liquid to its density frequently occurs in the study of viscosity and hydraulics. The term "kinematic viscosity" with the symbol ν has been assigned to it. As stated

$$\nu = \frac{\mu}{\rho},\ \mathrm{m^2/s\ (ft^2/s)} \qquad (3\text{-}6)$$

where

ρ = density at pressure p and temperature t, kg/m^3 (slug/ft^3).

In the SI the unit of kinematic viscosity is the square meter per second. The stoke is another commonly used unit. The centistoke (cSt) (one hundredth of a stoke) is more generally used. One centistoke equals one square millimeter per second (mm^2/s). In the English system kinematic viscosity is expressed in ft^2/s. The kinematic viscosity of a liquid can be viewed as the resistance of the liquid to flow under its own gravity head.

3-2.1.4 Other Viscosity Scales

Numerous other scales of viscosity have been established that express viscosity in terms of arbitrary units based on the instruments used to make the measurement. The most common scales used in the petroleum industry are the Saybolt Furol (used mainly in the United States), the Redwood No. 1 (Standard) and Redwood No. 2 (Admiralty) (used in Great Britain), and the Engler (used chiefly in Germany and other countries in Europe). All are empirical instruments in that the time of outflow of an arbitrary constant amount of liquid through a fixed orifice is quoted as a measurement of the viscosity of the liquid. The instruments are similar, but various dimensions and amounts of liquid used assign different viscosity numbers to the same fluid. Therefore, the viscosity is meaningful only when the instrument and temperature are also named (Ref. 1).

Although use of the Saybolt scales has been discontinued officially, they are still frequently found in practice. The Saybolt Universal and Saybolt Furol viscosity scales give viscosity in terms of seconds, Saybolt Universal Seconds (SUS) or Saybolt Furol Seconds (SFS). A Furol viscosity is approximately one-tenth of the Universal viscosity for the same liquid at the same temperature. The Furol scale is used chiefly for petroleum products having viscosities greater than 1000 SUS, such as heavy fuel and road oils.

Rather than specifying hydraulic fluids by viscosity, it is more common to specify them by International Organization for Standardization (ISO) viscosity grade (VG). The ISO VG indicates the viscosity of the fluid in centistokes at 40°C. Product fluid containers frequently carry this designation (Ref. 2).

3-2.1.5 Viscosity Unit Conversions

A viscosity determined in a particular instrument at a specific temperature can be converted to the equivalent viscosity in some other instrument at the same temperature. A wide variety of equations, tables, charts, and nomographs has been developed to facilitate such conversions. Currently, the trend is toward expressing viscosity in the metric units mm^2/s, although centipoises and centistokes are still commonly used. Data in convenient tabular form for the conversion of kinematic viscosity to Saybolt Universal and Saybolt Furol viscosities are provided in American Society for Testing and Materials (ASTM) Standard D 2161 (Ref. 3). Procedures for converting the five more common viscosity scales to the metric scale in mm^2/s are described:

1. Saybolt Universal Seconds (obsolete) to mm^2/s

$$\nu = 0.226T - \frac{195}{T},\ \mathrm{mm^2/s},\ 32 \le T \le 100\ \mathrm{s} \qquad (3\text{-}7)$$

$$\nu = 0.220T - \frac{135}{T},\ \mathrm{mm^2/s},\ T > 100\ \mathrm{s} \qquad (3\text{-}8)$$

where

T = efflux time, s.

2. Saybolt Furol Seconds (obsolete) to mm^2/s

$$\nu = 2.24T - \frac{184}{T},\ \mathrm{mm^2/s},\ 25 \le T \le 40\ \mathrm{s} \qquad (3\text{-}9)$$

$$\nu = 2.16T - \frac{60}{T},\ \mathrm{mm^2/s},\ T > 40\ \mathrm{s} \qquad (3\text{-}10)$$

3. Redwood No. 1 (Standard) Seconds to mm^2/s

$$\nu = 0.260T - \frac{179}{T},\ \mathrm{mm^2/s},\ 34 \le T \le 100\ \mathrm{s} \qquad (3\text{-}11)$$

$$\nu = 0.247T - \frac{50}{T},\ \mathrm{mm^2/s},\ T > 100\mathrm{s} \qquad (3\text{-}12)$$

4. Redwood No. 2 (Admiralty) Seconds to mm^2/s

$$\nu = 2.46T - \frac{100}{T},\ \mathrm{mm^2/s},\ 32 \le T \le 90\ \mathrm{s} \qquad (3\text{-}13)$$

$$\nu = 2.45T,\ \mathrm{mm^2/s},\ T > 90\ \mathrm{s} \qquad (3\text{-}14)$$

Downloaded from http://www.everyspec.com

5. Engler Degrees $E°$ to mm^2/s

$$\nu = 8.0E° - \frac{8.64}{E°},\ mm^2/s,\ 1.35 \le E° \le 3.2 \quad (3\text{-}15)$$

$$\nu = 7.6E° - \frac{4.0}{E°},\ mm^2/s,\ E° > 3.2 \quad (3\text{-}16)$$

where

$E°$ = viscosity, Engler degrees.

3-2.1.6 Newtonian Fluids

When a liquid flows in a manner such that the shearing stress S is directly proportional to the rate of shear R, as shown in Fig. 3-2, the liquid is said to flow in accordance with Newton's Viscosity Law and is called a Newtonian fluid. Flow of this type is known as "viscous", or "streamline", flow. Viscous flow consists of an orderly motion in which layers of liquid slide past one another in a direction parallel to the direction of flow. The viscosity μ is constant with respect to the rate of shear R, as shown in Fig. 3-2. Most hydraulic fluids behave in a Newtonian, or nearly Newtonian, manner at the temperatures, pressures, and flow rates normally encountered in hydraulic systems. However, there are some types of materials that are never Newtonian, and most Newtonian fluids can be made to behave in a non-Newtonian manner by changing the pressure, temperature, and/or flow rate sufficiently. Non-Newtonian materials are discussed in the paragraphs that follow.

3-2.1.7 Non-Newtonian Materials

The viscosities of some materials are altered by shearing effects. These materials are termed "non-Newtonian". The viscosity depends on the rate of shear at which it is measured. Since a non-Newtonian fluid can have an unlimited number of viscosities (as the shear rate is varied), the term "apparent viscosity" is used instead of viscosity. Apparent viscosity is expressed in units of absolute viscosity, and the rate of shear used in the measurement is given.

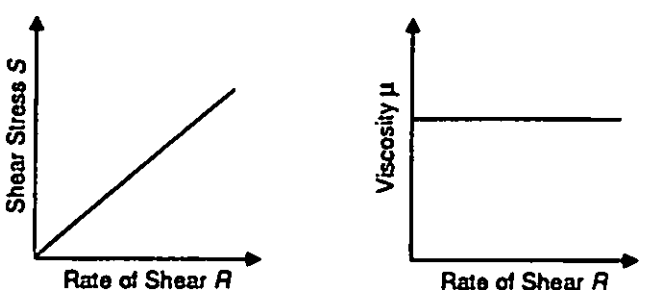

Figure 3-2. Viscosity and Shear Stress vs Rate of Shear Curves for a Newtonian Fluid

Non-Newtonian materials may be classified into five types: plastic, pseudoplastic, dilatant, thixotropic, and rheopectic. A discussion of each follows:

1. *Plastic*. A definite minimum stress or force must be applied to this type of material before any flow occurs, and viscosity decreases as shear rate increases as shown in Fig. 3-3. Examples of such materials are putty, molding clay, and many types of greases. Such fluids are often termed "Bingham"-type fluids.

2. *Pseudoplastic*. This type of material has no fixed yield point; however, the viscosity does decrease with increasing shear rates as shown in Fig. 3-4. Examples of such materials are water-base liquids and resinous materials.

3. *Dilatant*. The apparent viscosity of this type of material increases as the rate of shear increases, and the material will often solidify at high rates of shear. This is shown in Fig. 3-5. However, when the applied force is removed, the material reverts to its original state, i.e., liquid. Examples of dilatant materials are pigment-vehicle suspensions, such as paints and printing ink, and some starches.

4. *Thixotropic*. The viscosity of this type of material is time dependent. If it is subjected to a constant rate of shear, its structure breaks down and its apparent viscosity decreases to some minimum value. This is shown in Fig. 3-6. However, when the applied force is removed, the material reverts to its original state, i.e., gelled. Paints are probably the most notable example of thixotropic materials. Quicksand is also thixotropic.

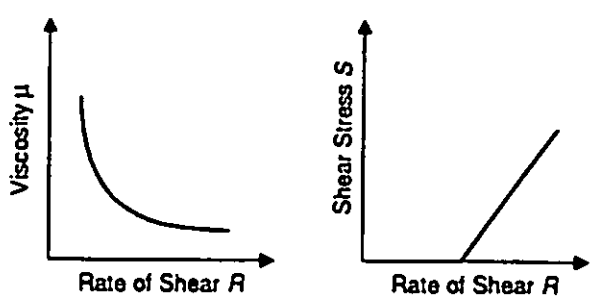

Figure 3-3. Viscosity and Shear Stress vs Rate of Shear Curves for a Plastic Material

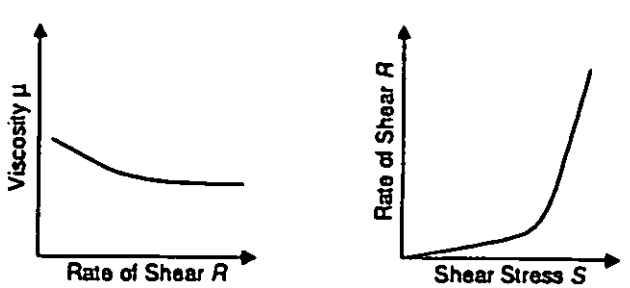

Figure 3-4. Viscosity and Shear Stress vs Rate of Shear Curves for a Pseudoplastic Material

Downloaded from http://www.everyspec.com

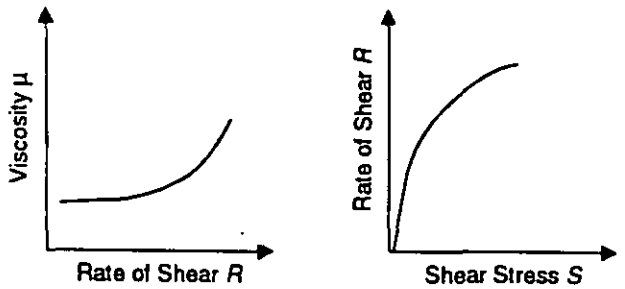

Figure 3-5. Viscosity and Shear Stress Curves vs Rate of Shear for a Dilatant Material

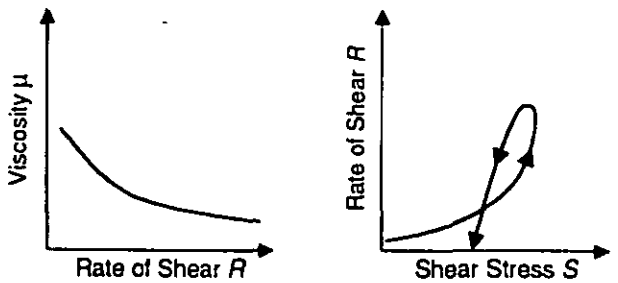

Figure 3-6. Viscosity and Shear Stress vs Rate of Shear Curves for a Thixotropic Material

5. *Rheopectic*. This type of material is similar to the thixotropic materials except that the apparent viscosity increases with shearing time up to some maximum value. This can be seen in Fig. 3-7. Some bearing greases are manufactured with this property to facilitate pumping into containers in a less viscous state to increase in viscosity when in use in a bearing. However, many such greases are not true rheopectic materials because they do not revert to their original state after the applied force is removed; they retain a somewhat higher viscosity.

3-2.1.8 Determination of Viscosity of Non-Newtonian Materials

As shown in Fig. 3-8, determination of the viscosity of a non-Newtonian fluid at only one shear rate is usually not sufficient. The viscosities of the Newtonian and non-Newtonian fluids shown have the same value at a reference shear rate R_0. Incorrect comparisons and application difficulties would be invited if the viscosities at only this point were specified.

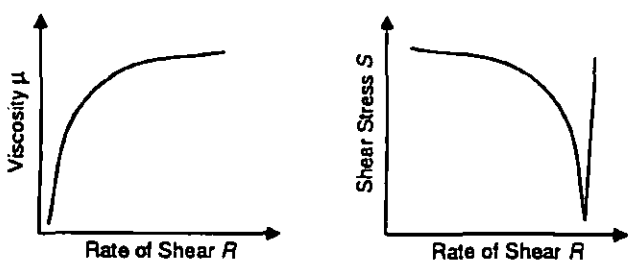

Figure 3-7. Viscosity and Shear Stress vs Rate of Shear Curves for a Rheopectic Material

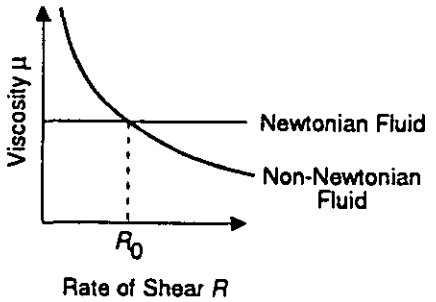

Figure 3-8. Viscosity vs Rate of Shear Curves for a Newtonian and a Non-Newtonian Fluid

3-2.1.9 Measurement of Viscosity

Liquid viscosity is measured by an instrument called a viscometer. A large number of viscometers have been developed. Eight of the most common measurements upon which viscometers are based follow (Ref. 4):

1. The time of flow of a quantity of liquid through a capillary or a short tube that uses gravity as the moving force
2. The torque required to rotate a cylinder, disk, or paddle in a liquid at constant speed
3. The torque exerted on a disk suspended in a rotating cup of the liquid
4. The rotational speed of a cylinder or disk driven in the liquid by a constant torque
5. The time of fall through the liquid of a ball or cylindrical object
6. The time of rise of an air bubble through the liquid
7. The rate of damping of ultrasonic waves induced in the liquid
8. The pressure drop through a capillary.

The most widely used viscometers in the petroleum industry are the capillary and the short tube viscometers. ASTM D 445 (Ref. 5) prescribes the standard procedure for measuring kinematic viscosity and describes the capillary viscometers that are to be used. Briefly, the method calls for measuring the time of flow of a known quantity of liquid at a constant temperature through a capillary with gravity as the only moving force and then multiplying the time by a calibration constant. The calibration constant is determined by using a master viscometer (National Institute of Standards and Technology (formerly National Bureau of Standards)) and standard oils. Absolute viscosity μ is given by

$$\mu = \rho \nu. \qquad (3\text{-}17)$$

Downloaded from http://www.everyspec.com

A separate determination of the density ρ must be made before calculating the absolute viscosity. Par. 3-2.9.5 lists several approved test procedures for determining density.

The Cannon-Fenske capillary viscometer, shown in Fig. 3-9, is the most common one used in hydraulic fluid work. A cross section of the Saybolt viscometer, still widely used in the petroleum industry, is shown in Fig. 3-10.

3-2.1.10 Test Methods for Viscosity

A discussion of several test methods follows:

1. *Kinematic Viscosity*

Test Methods. Federal Test Method 305 (Ref. 6)
ASTM D 445 (Ref. 5)

This method describes the procedure used to determine the kinematic viscosity of transparent or opaque fluids higher than 0.2 mm^2/s. Determinations may be made at temperatures ranging from −54 to 135°C (−65 to 275°F) where the flow in the glass-capillary-type viscometer is Newtonian. The time is measured for a fixed volume of a test fluid to flow through the capillary under a gravity head and at a closely controlled temperature. The kinematic viscosity is then calculated from the efflux time and the viscometer calibration factor.

Precision. For clean transparent oils tested over the range from 15 to 100°C (59 to 212°F), results should not be considered suspect unless they differ by more than the following amounts:

a. Repeatability. 0.35% of mean
b. Reproducibility. 0.7% of mean.

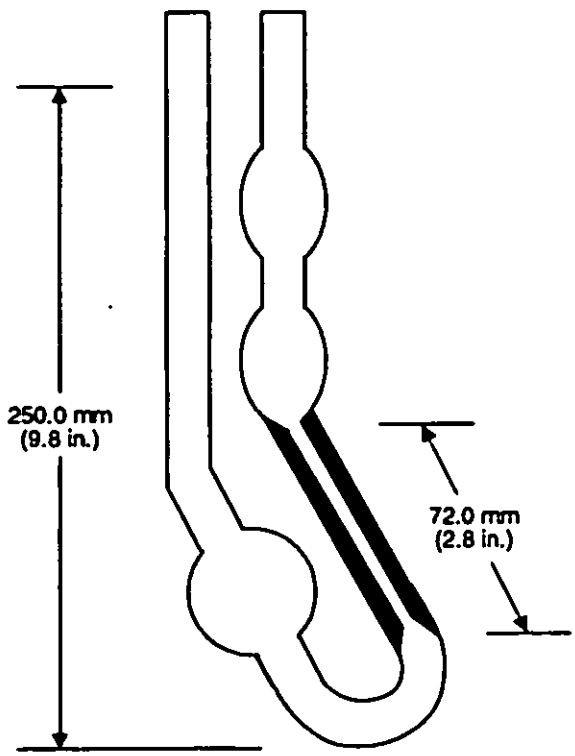

Figure 3-9. Cannon-Fenske Capillary Tube Viscometer

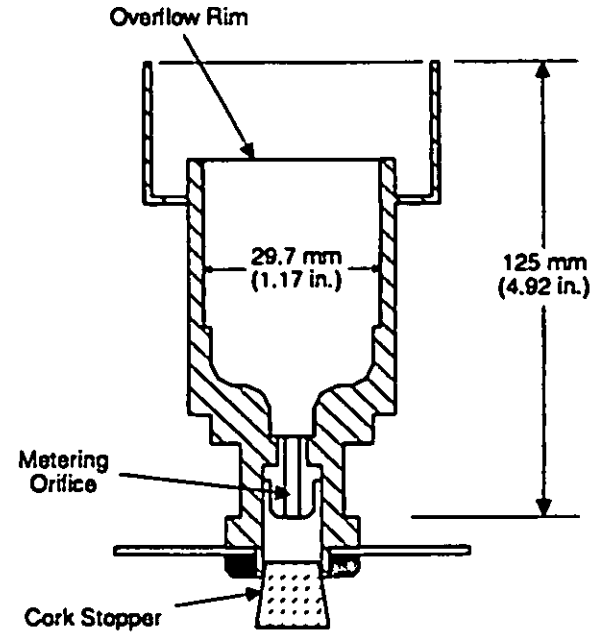

Figure 3-10. Cross-Sectional View of a Saybolt Viscometer

2. *Saybolt Viscosity*

Test Method. Federal Test Method 304 (Ref. 7)

This method describes the procedure used to determine the Saybolt viscosity of petroleum products in the temperature range of 21 to 98.9°C (70 to 210°F). The efflux time in seconds of 60 mL of the sample flowing under a gravity head through a calibrated orifice is measured under carefully controlled temperature conditions. A Universal orifice is used for Saybolt Universal viscosity and a Furol orifice is used for Saybolt Furol viscosity. The time is corrected by an orifice factor and reported as the viscosity of the sample at the test temperature in Saybolt Universal Seconds or Saybolt Furol Seconds. Viscosity values below 200 s are reported to the nearest 0.1 s. Values above 200 s are reported to the nearest whole second.

3. *Conversion of Kinematic Viscosity to Saybolt Universal Viscosity or to Saybolt Furol Viscosity*

Test Methods. Federal Test Method 9101 (Ref. 8)
ASTM D 2161 (Ref. 3)

These methods provide conversion tables for converting viscosity in centistokes to Saybolt Universal Seconds at 100 and 210°F and also for converting viscosity in centistokes at 122 and 210°F to Saybolt Furol Seconds at the same temperature. The tables are supplemented with equations. NOTE: °C is not used in these tables.

Downloaded from http://www.everyspec.com

4. *Calibration of Master Viscometers and Viscosity Oil Standards*

Test Method. ASTM D 2162 (Ref. 9)

This method covers procedures used to calibrate master viscometers and viscosity oil standards, both of which may be used to calibrate routine viscometers used to determine kinematic viscosity (Ref. 5). Master viscometers are calibrated with water at 20°C (68°F). They are then used to calibrate viscosity oil standards, i.e., stable Newtonian liquids.

Specifications, dimensions, and operating instructions are given for the following types of viscometers:

a. Modified Ostwald Viscometers. Cannon-Fenske routine, Cannon-Manning semimicro, Zeitfuchs, SIL

b. Suspended-Level Viscometers. Ubbelohde, Fitzsimons, Atlantic, Cannon-Ubbelohde, Cannon-Ubbelohde semimicro

c. Reverse-Flow Viscometers. Cannon-Fenske opaque, Zeitfuchs crossarm, Lantz-Zeitfuchs.

5. *Glass Kinematic Viscometers*

Test Method. ASTM D 446 (Ref. 10)

This method provides specifications for glass capillary-type kinematic viscometers suitable for use in the ASTM test method for kinematic viscosity (Ref. 5). A Cannon-Master viscometer is shown in Fig. 3-11.

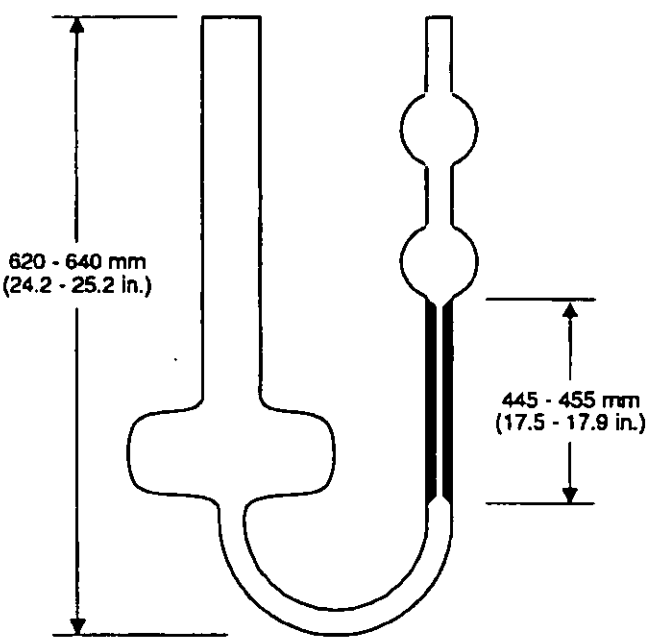

Figure 3-11. Cannon-Master Viscometer

3-2.1.11 Laminar, Mixed, and Turbulent Flow

Laminar flow in a conduit is very well-behaved and is characterized by well-defined flow lines, or "streamlines". Flow that is turbulent has no defined flow lines other than a very thin laminar boundary adjacent to the pipe walls. These regimes are shown in Fig. 3-12.

An estimate of whether the flow in a conduit is laminar is provided by the flow Reynolds number. The Reynolds number R_n is defined mathematically as

$$R_n = \frac{vD}{\nu} = \frac{vD\rho}{\mu}, \text{ dimensionless} \qquad (3\text{-}18)$$

where

D = pipe inside diameter, m (ft).

As a generalization, if the value of the Reynolds number is less than 2000, the flow can be considered laminar, but if it is above 4000, the flow can be considered turbulent. Between those two values is the mixed, or transition, flow regime, which is generally unstable and unpredictable. The designations of laminar below 2000 and turbulent above 4000 are reasonably reliable, although in carefully controlled laboratory situations these values have been manipulated over very wide ranges.

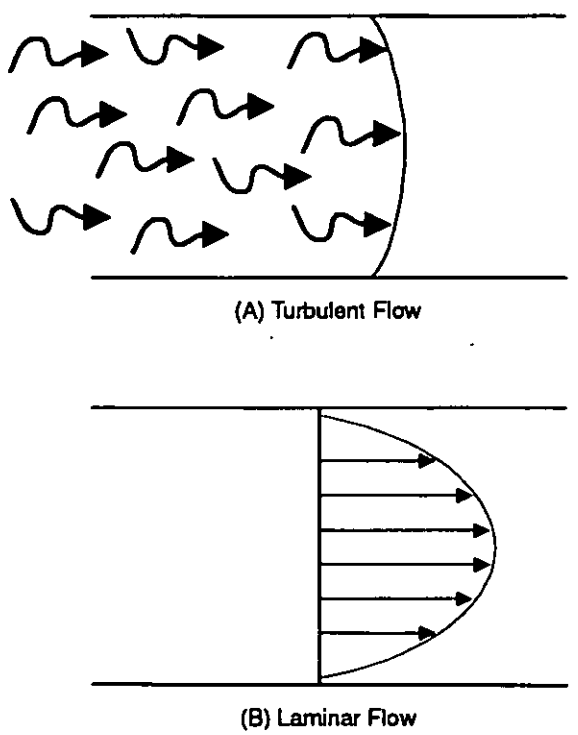

Figure 3-12. Laminar and Turbulent Flow in a Pipe

Downloaded from http://www.everyspec.com

3-2.2 VISCOSITY-TEMPERATURE PROPERTIES

Temperature is the most important factor affecting viscosity. Viscosity decreases with increasing temperature, but the rate of decrease depends upon the structure and chemical composition of the liquid. The amount of the decrease depends primarily upon the magnitude of the temperature change. Most components of a hydraulic system are quite specific in their demands for a particular viscosity at their operating temperature, which rarely coincides with the fixed temperatures that are standard in the test methods for viscosity. To match the viscosity of a liquid to the requirements of a component requires a knowledge of the viscosity-temperature characteristics of the liquid over its usable temperature range.

Petroleum liquids described by US Military Specifications are available for use within various temperature ranges. Some are usable to –62°C (–80°F) and others to 288°C (550°F). Increases in the upper temperature limit of petroleum liquids have been obtained by special processing or by additives. Development of liquids suitable for use in high-temperature environments is currently one of the prime areas of interest in the hydraulic fluid industry. Properties of available high-temperature liquids are discussed in greater detail in Chapter 4. Viscosity requirements at various temperatures of several typical US Military Specification hydraulic fluids are given in Table 3-1.

3-2.2.1 ASTM Viscosity-Temperature Charts

Many systems have been developed to express the viscosity-temperature characteristics of liquids. The most widely used procedure incorporates the viscosity-temperature charts published by ASTM. These charts, available from ASTM, are described in ASTM Standard D 341 (Ref. 11) and in Federal Test Method 9121 (Ref. 12). Seven different viscosity-temperature charts similar to the one shown in Fig. 3-13 are available with various temperature ranges and kinematic viscosity scales. These charts are constructed so that the plot of viscosity vs temperature is a straight line for most petroleum liquids. Thus only two viscosity measurements, usually at 40 and 100°C (104 and 212°F), need to be made to determine a line from which the approximate viscosity at any other temperature can be read.

The viscosity-temperature charts are useful for predicting viscosity only when the graph of a liquid is linear. In most instances this will occur over the temperature range for which a given liquid is Newtonian. Many Newtonian petroleum liquids, however, deviate from linearity at low viscosities, i.e., high temperature. Many liquids deviate from linearity near their cloud points (par. 3-2.6.1) because of the formation of wax particles. For non-Newtonian liquids and for Newtonian liquids that are in nonlinear conditions of behavior, the plot of viscosity vs temperature cannot be used to predict viscosity. The actual viscosity-temperature properties of the liquid must be determined and plotted. The ASTM charts were derived with computer assistance to provide linearity over the greatest range possible.

3-2.2.2 ASTM Slope

The ASTM slope is sometimes referred to in older literature. This value was originally obtained by physically measuring the slope of the kinematic viscosity-temperature data plotted on the charts given in the 1943 version of ASTM D 341 (Ref. 11). The scales on the new charts are not made to the same ratios as those on the 1943 charts. Consequently, different values for the ASTM slope are obtained from the new charts. Although the values obtained from the earlier charts had little physical meaning, values from the new charts have virtually no meaning at all.

TABLE 3-1. KINEMATIC VISCOSITIES OF SEVERAL MILITARY SPECIFICATION HYDRAULIC FLUIDS

TEMPERATURE °C	°F	MIL-H-5606F	MIL-H-46170B	MIL-H-6083E	MIL-H-83282C	MIL-H-53119 (CTFE)	MIL-H-87257
–54	–65	2500 max	13,000 typ*	3500 max	—	1200 max	2500 max
–40	–40	600 max	2600 max	800 max	2200 max	—	550 max
40	104	13.2 min	18.5 max	13 min	14 min	2.9 min	6.7 min
100	212	4.9 min	3.4 max	Not Reported	3.45 min	0.6 min (at 135°C)	2.0 min

All viscosities are in mm^2/s.
*typ = typical

Downloaded from http://www.everyspec.com

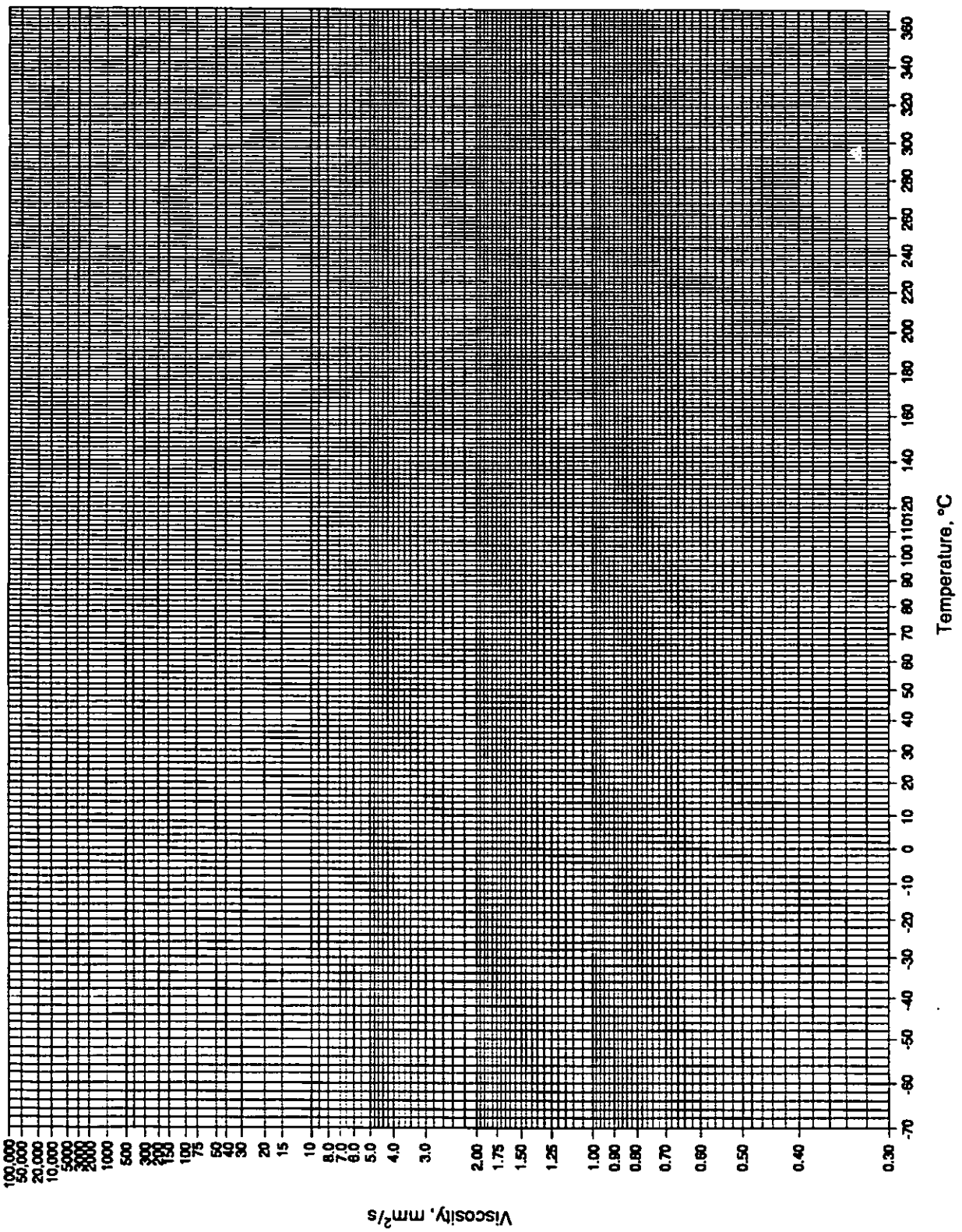

Copyright ASTM. Reprinted with permission.

Figure 3-13. Facsimile of Kinematic Viscosity-Temperature Chart (Ref. 11)

Downloaded from http://www.everyspec.com

3-2.2.3 Viscosity-Temperature Coefficient

Another way of expressing the viscosity-temperature relationship of a liquid is with the viscosity-temperature coefficient *VTC*, which is defined by

$$VTC = \frac{\nu_{40} - \nu_{100}}{\nu_{40}} = 1 - \frac{\nu_{100}}{\nu_{40}}, \text{ dimensionless} \qquad (3\text{-}19)$$

where

ν_{40} = kinematic viscosity at 40°C (104°F), mm^2/s

ν_{100} = kinematic viscosity at 100°C (212°F), mm^2/s.

It has not found wide use in the hydraulic fluid industry.

3-2.2.4 Viscosity Index

The viscosity index *VI* of a liquid is a number indicating the effect of a change in temperature on viscosity. A low *VI* signifies a relatively large change of viscosity with temperature. A high *VI* signifies a relatively small change of viscosity with temperature. The convenience afforded by the use of a single number to express the viscosity-temperature characteristics of a liquid has resulted in the widespread adoption of the viscosity index system by the petroleum industry.

The *VI* is an empirical scale using two series of petroleum fractions as standards. One fraction, which seemed to have minimum viscosity-temperature sensitivity, was arbitrarily assigned a *VI* of 100. The other fraction with maximum viscosity-temperature sensitivity was assigned a *VI* of 0. When the index scale was developed, all other petroleum fractions were expected to fall within the 0 to 100 limits. However, solvent refining, the use of additives, and synthetics have produced materials that are outside the *VI* scale in both directions.

The *VI* of a liquid with a given viscosity at 100°C (212°F) is calculated by relating its viscosity at 40°C (104°F) for each of the standard fractions having a viscosity at 100°C (212°F) equal to that of the unknown at 98.9°C (210°F). The *VI* is calculated by

$$VI = \left(\frac{L - U}{L - H}\right)100, \text{ dimensionless} \qquad (3\text{-}20)$$

where

L = viscosity at 40°C (104°F) of a petroleum fraction of 0 *VI* having the same viscosity at 100°C (212° F) as the fluid whose *VI* is to be calculated, mm^2/s (ft^2/s)

H = viscosity at 40°C (104°F) of a petroleum fraction of 100 *VI* having the same viscosity at 100°C (212°F) as the fluid whose *VI* is to be calculated, mm^2/s (ft^2/s)

U = viscosity at 40°C (104°F) of the fluid whose *VI* is to be calculated, mm^2/s (ft^2/s).

ASTM D 2270 (Ref. 13) and Federal Test Method 9111 (Ref. 14) provide tables of values for *L*, *H*, and *L* – *H* for determining the *VI* of a liquid from the centistoke viscosity at 40 and 100°C (104 and 212°F). A schematic representation of *VI* is shown in Fig. 3-14.

The *VI* scale as described has been in general use in the United States although it has a number of deficiencies. For many years the procedure in ASTM D 567 (Rescinded) was used to calculate the *VI*. ASTM D 567 has been replaced because of the anomalies that resulted from use of the method. Some of the problems experienced are

1. It is based on arbitrary standards.
2. The system breaks down for light oils having viscosities below about 8 cSt at 100°C (212°F).
3. In the range above *VI* of 125, the scale becomes meaningless since two oils that have equal viscosity at 40°C (104°F) but widely different viscosities at 100°C (212°F) may have the same *VI*.
4. *VI* is not an additive property. The *VI* of an oil blend cannot be determined by manipulation of the *VI* of the individual components, particularly when widely different types of liquids are involved.

In spite of its shortcomings, the *VI* remains the most popular system used to express the viscosity-temperature characteristics of fluids. Numerous suggestions have been proposed to eliminate the shortcomings of the system or to find a more fundamental means of expressing viscosity-temperature characteristics. Most of the suggested systems, however, were too complex for general use or had faults of their own, so a method (Refs. 13 and 14) was developed to

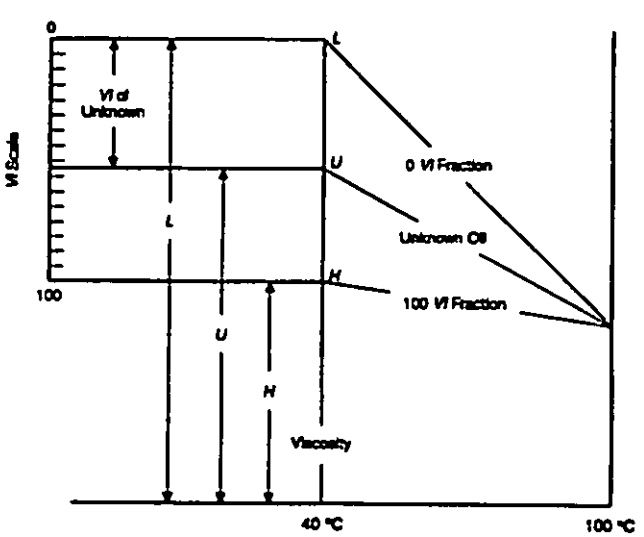

Courtesy of Texaco's magazine *Lubrication*.

Figure 3-14. Schematic Representation of Viscosity Index (VI) (Ref. 1)

Downloaded from http://www.everyspec.com

correct the deficiencies in the ASTM *VI*s above 100 without shifting the values between 0 and 100. Values above 100 are designated viscosity index extended VI_E (Ref. 15) to distinguish them from values obtained by the previous method.

3-2.2.5 Test Methods for Viscosity-Temperature Properties

A discussion of two methods follows:

1. *Viscosity-Temperature Charts*

Test Methods. ASTM D 341 (Ref. 11)
Federal Test Method 9121 (Ref. 12)

These methods provide specifications for standard viscosity-temperature charts, such as the one shown in Fig. 3-13, for petroleum fluids, for kinematic viscosity, and for a range of temperatures. Charts available from ASTM are

a. Chart I. Kinematic Viscosity, High Range: Kinematic Viscosity: 0.3 to 20,000,000 cSt, Temperature: −70 to +370°C, Size: 680 by 820 mm (26.75 by 32.25 in.)

b. Chart II. Kinematic Viscosity, Low Range: Kinematic Viscosity: 0.18 to 6.5 cSt, Temperature: −70 to +370°C, Size: 520 by 820 mm (20.5 by 32.25 in.)

c. Chart III. Kinematic Viscosity, High Range: Kinematic Viscosity: 0.3 to 20,000,000 cSt, Temperature: −70 to +370°C, Size: 217 by 280 mm (8.5 by 11.0 in.)

d. Chart IV. Kinematic Viscosity, Low Range: Kinematic Viscosity: 0.18 to 6.5 cSt, Temperature: −70 to +370°C, Size: 217 by 280 mm (8.5 to 11.0 in.)

e. Chart V. Kinematic Viscosity, High Range: Kinematic Viscosity: 0.3 to 20,000,000 cSt, Temperature: −100 to +700°F, Size: 680 by 820 mm (26.75 by 32.25 in.)

f. Chart VI. Kinematic Viscosity, Low Range: Kinematic Viscosity: 0.18 to 3.0 cSt, Temperature: −100 to +700°F, Size: 520 by 820 mm (20.5 by 32.25 in.)

g. Chart VII. Kinematic Viscosity, Middle Range: Kinematic Viscosity: 3 to 200,000 cSt, Temperature: −40 to +150°C, Size: 217 by 280 mm (8.5 by 11.0 in.)

2. *Calculation of Viscosity Index*

Test Methods. Federal Test Method 9111 (Ref. 14)
ASTM D 2270 (Ref. 13)

These methods provide tables and equations to be used to calculate the *VI* of petroleum products from their viscosities at 40 and 100°C (104 and 212°F). Tables are provided for liquids with viscosities at 100°C (212°F) between the values of 2 and 70 mm^2/s.

Tedious calculation of *VI* can be eliminated by the use of data in ASTM Data Series 39a, *ASTM Viscosity Index Tables Calculated from Kinematic Viscosities* (Ref. 16). This reference gives *VI* in several different ranges of fluid viscosities.

3-2.3 VISCOSITY OF BLENDS OF TWO LIQUIDS

The ASTM viscosity-temperature charts can be used to predict the composition of a new blend of two liquids to obtain a required viscosity or to estimate the composition of an existing blend when the viscosities of the two components are known. In this procedure the vertical scale of any ASTM chart is used without change. The horizontal scale between −18 and 37.8°C is relabeled 0-100% and used to represent the percent by volume of the higher viscosity component. The viscosity at a given temperature of the lower viscosity component is marked on the 0% line, and the viscosity at the same temperature of the higher viscosity component on the 100% line. The two points are connected by a straight line, and the required volumetric composition of any blend of intermediate viscosity may be read on the abscissa of Fig. 3-15. Conversely, the composition of a blend can be estimated when the viscosities of the two components are known and plotted in this manner (Ref. 4).

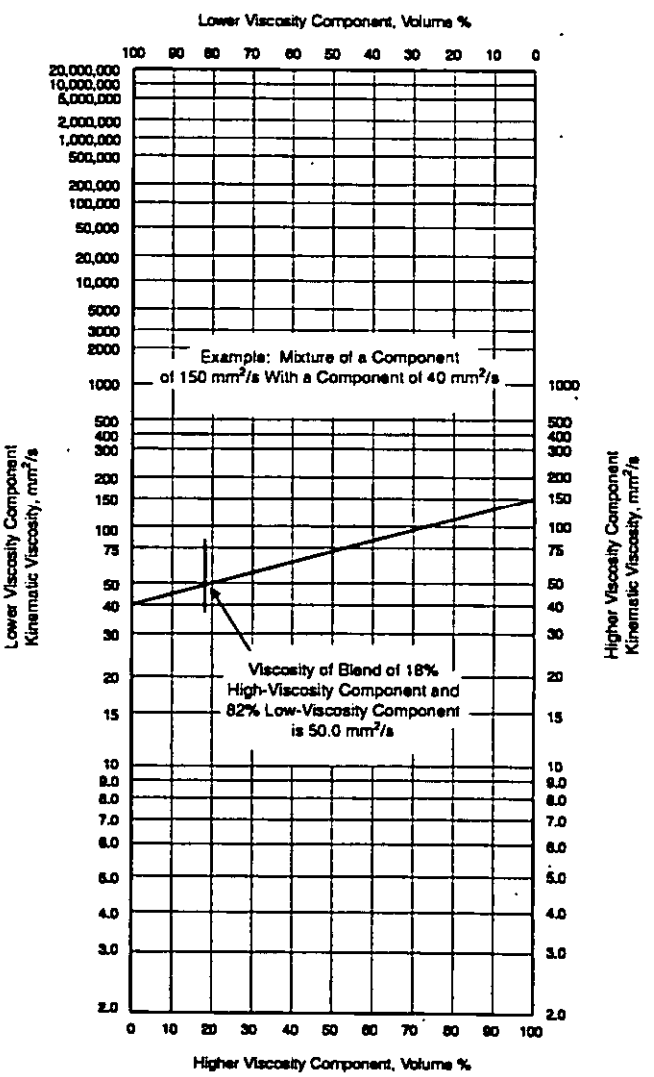

Figure 3-15. Viscosity Blending Chart

Downloaded from http://www.everyspec.com

3-2.4 VISCOSITY-PRESSURE PROPERTIES

The viscosity of a liquid varies with pressure as well as temperature. For many years pressure effects in hydraulic systems were neglected because the pressures encountered were moderate and the viscosity was not greatly affected. The rate of increase is also influenced by the structural and chemical composition of the fluid. Graphs of viscosity vs pressure at several temperatures for a typical petroleum fluid are shown in Fig. 3-16. Graphs of viscosity vs temperature at several pressures for a typical synthetic fluid are shown in Fig. 3-17.

Most of the work on viscosity-pressure effects has been done in studies concerned with lubrication theory. Lubricating fluids for ball bearings and gears are often subjected to extremely high pressures at contact surfaces under which their viscosities increase appreciably. At pressures as low as 27,600 kPa (4000 lb/in.^{2}), the increase in viscosity can cause considerable differences in the results obtained by a lubrication theory calculation (Ref. 4).

A number of empirical equations have been suggested to relate viscosity to pressure. The one that follows, although valid only over a moderate pressure range, is the one most commonly used:

$$\mu_p = \mu_e^{kp}, \text{ m}^2/\text{s} \qquad (3\text{-}21)$$

where

μ_p = absolute viscosity at pressure p, Pa·s (lb·s/ft^2)

μ_e = absolute viscosity at atmospheric pressure, Pa·s (lb·s/ft^2)

k = a constant for a given oil and temperature, kPa^{-1} (ft^2/lb)

p = pressure, kPa (lb/ft^2).

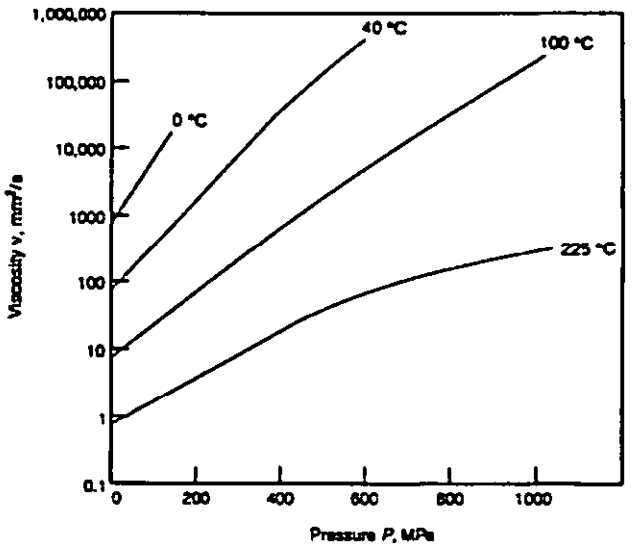

Figure 3-16. Viscosity vs Pressure at Several Temperatures for a Typical Petroleum Fluid (Ref. 17)

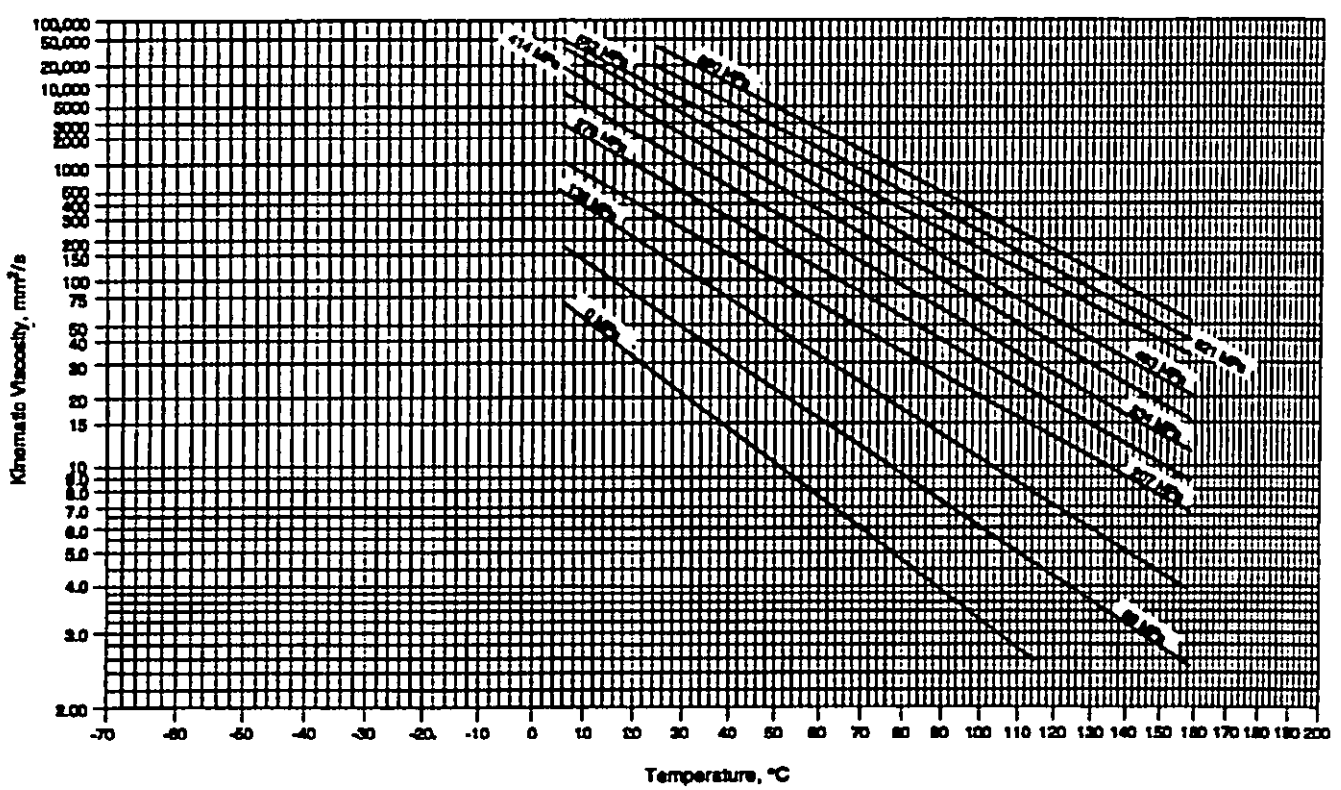

Figure 3-17. Viscosity vs Temperature at Several Pressures for a Synthetic Fluid (Ref. 17)

Downloaded from http://www.everyspec.com

Several general statements about the viscosity-pressure properties of petroleum products can be made, namely:

1. A pressure increase of about 3450 kPa (500 lb/in.^{2}) has the equivalent effect on viscosity of a temperature decrease of 1.1 deg C (2 deg F).

2. The same increase in pressure shows a greater effect on viscosity at low pressures than at high pressures.

3. Lower viscosity fluids are less affected by pressure than higher viscosity fluids.

4. An increase in pressure increases the *VI*.

The study of the effects of pressure on viscosity is an area of research that has received considerable interest in recent years. The viscosities of liquids at pressures up to 1034 MPa (150,000 lb/in.^{2}) and temperatures up to 218°C (425°F) have been reported by the ASME (Ref. 18) and by Wilson (Ref. 17). Klaus *et al.* (Refs. 19-21) have conducted viscosity-pressure studies on numerous liquids at pressures up to 68.9 MPa (10,000 psi), which are likely to be encountered in typical hydraulic systems. As more data are accumulated on viscosity-pressure effects, more intelligent choices of lubricants and hydraulic fluids will be possible. The inclusion of viscosity-pressure data in design studies could result in the use of liquids of lower viscosity than the classical lubrication equations would indicate. Using a liquid of lower viscosity has the advantages of permitting lower operating temperatures, less liquid friction, and smaller power losses.

3-2.5 VISCOSITY-SHEAR PROPERTIES

Some aircraft and many industrial hydraulic fluids currently in use contain polymeric thickeners called viscosity index improvers, or "VI improvers", to reduce viscosity change due to temperature. When liquids containing these VI improvers are subjected to high rates of shear, they often suffer a loss in viscosity and VI because of degradation of the polymers. The unit of shear rate is the reciprocal second (s^{-1}). A shear rate of one reciprocal second occurs when parallel planes 10 mm apart move in opposite directions at a relative speed of 10 mm/s. High shear rates occur where speeds are high and clearances small. Some typical shear rates are shown in Table 3-2 (Ref. 22). Circulation of a hydraulic fluid through a system subjects the fluid to rapid shear rates and sudden pressure changes as it passes through orifices and close-tolerance areas. The resultant loss in viscosity may be a permanent loss, a temporary loss, or a combination of the two.

3-2.5.1 Temporary Viscosity Loss Due to Shear

Temporary viscosity loss is due to orientation, or "lining up", of the long chain polymer molecules in the direction of flow. The polymer molecules thicken a liquid more when they are oriented randomly than when they are oriented in the direction of flow. The orientation of the molecules can actually be seen when the flow in transparent tubes is observed under polarized light. When the shearing stress is removed, the liquids regain their original viscosity.

Temporary loss of viscosity has several important effects on the performance of hydraulic fluids. Three of the most important of these are an increase in internal leakage, a decrease in the load-carrying capability of the fluid, and a reduction in fluid friction. Leakage around close-fitting parts increases as the viscosity decreases and results in reduced system efficiency.

The loss in load-carrying capability of the fluid results in increased friction in the moving components. (This is discussed in detail in par. 3-3, "Lubrication Properties".) This loss also means that there is likely to be more surface-to-surface contact, which results in accelerated wear rates and increased fluid contamination by the wear particles. However, the reduction in fluid friction that accompanies reduced viscosity also reduces system losses in piping and fittings, which is beneficial.

Three methods have been developed for measuring the temporary viscosity loss of a fluid due to shear. One method uses a bank of capillary tubes; another uses a concentric cylinder. The most commonly used apparatus, however, is the

TABLE 3-2. ESTIMATED SHEAR RATES OF LUBRICANTS (Ref. 22)

APPLICATION	RADIAL CLEARANCE BETWEEN MOVING AND STATIONARY PARTS, mm (in.)	RELATIVE VELOCITY OF PARTS	SHEAR RATE, s^{-1}
Piston-cylinder clearance in automotive engine	0.0254 (0.001)	5.08 to 10.16 m/s (200 to 400 in./s)	200,000 to 400,000
Plain journal bearing (50.8-mm (2-in.) diameter)	0.0254 to 0.00254 (0.001 to 0.0001)	1800 rpm	188,000 to 1,820,000
Ball-type hydraulic pump	0.0076 (0.0003)	3500 rpm	3,000,000
Bosch piston-type diesel fuel pump	0.001 (0.00004)	0.091 m/s (36 in./s)	900,000

Reprinted by permission of Society of Tribologists and Lubrication Engineers. All rights reserved.

Downloaded from http://www.everyspec.com

tapered plug viscometer. The tapered plug method is detailed in ASTM D 4741 (Ref. 23). This method uses a close-fitting rotor and stator that have a slight, matching taper. This taper allows adjustment of the clearance between the rotor and stator. This clearance controls the shear rate. The gap is filled with the test fluid, and the rotor is rotated at a known speed. The viscosity of the fluid is determined by measuring the reaction torque.

3-2.5.2 Permanent Viscosity Loss Due to Shear

Permanent viscosity loss is the result of chemical breakdown or mechanical rupturing of the large polymer molecules into smaller molecules. Rupture of the polymer molecules may occur in both laminar and turbulent flow; however, polymer degradation is generally greater under turbulent conditions. Cavitation, where large shearing forces are developed by the rapid formation and collapse of cavities in the liquid, can cause extensive scission of the polymer chain. Polymer degradation by chemical reactions, such as oxidation, hydrolysis, and radiolysis, does occur, but mechanical scission of the polymer chain resulting from the large shearing forces on the molecule is the principal cause of viscosity loss in hydraulic fluids. Viscosity losses due to reduction in the chain length (molecular weight) of the polymer thickener are permanent, and the liquids do not regain their viscosity when the shearing forces are removed.

3-2.5.3 Test Methods for Viscosity-Shear Characteristics

There are several methods of measuring permanent shear viscosity loss. The most commonly used methods are the pump-orifice test, the sonic method, the diesel injector method, and the tapered-plug viscometer method. A discussion of these methods follows.

1. *Pump-Orifice Test.* The liquid is pressurized with a pump, and the pressure is released by passing the liquid through a small orifice to a low-pressure area. After a given number of cycles, the amount of permanent shear viscosity loss is expressed as the percent change in the viscosity at a given temperature. This test simulates actual service conditions and employs hydraulic system components. Results of a typical test are shown in Fig. 3-18.

2. *Sonic Method.* The sonic method consists of subjecting the liquid to high-frequency vibrations that produce permanent shear breakdown of the polymer molecules in extremely short periods of time as compared to the pump tests. The sonic energy is supplied from magnetostrictive oscillators. One such device generates 10 kHz at 200 W (Ref. 25). The sonic method has the advantages of using only a small sample (50 mL or less) of the liquid and requiring one hour or less to perform. Fig. 3-19 (Ref. 24) shows the effect of sonic irradiation on the viscosity of a typical MIL-H-5606 fluid. The correlation between sonic results and pump test results has been poor in many cases. Investigations have shown that the poor correlation might be attributed to at least two factors: (1) The sonic procedure is performed at atmospheric pressure, whereas the pump test uses a reservoir under pressure and (2) Both methods vary in their effect on different polymers (Ref. 26). The problem of dissolving gases in the liquid from the pressurized reservoir can be reduced by using an interface, such as a diaphragm, between the liquid and the pressurizing gas. When the effects of dissolved gases and the selective nature of the sonic irradiations are considered, there is closer correlation to data from pump tests. Considerable effort has been expended to develop a set of conditions for use in the sonic method, and much of the work has been summarized in ASTM Special Technical Publication No. 182 (Ref. 27).

3. *Diesel Injector Method.* The diesel injector method described in ASTM D 3945 (Ref. 28) is similar to the pump-orifice method in that the liquid is pressurized and forced through a small orifice. In the diesel injector method the die-

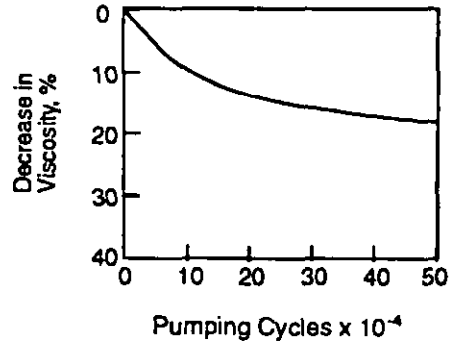

Reprinted by permission of Society of Tribologists and Lubrication Engineers. All rights reserved.

Figure 3-18. Effect of Shear Upon Viscosity of a Typical MIL-H-5606 Hydraulic Fluid in a Pump Orifice Test (Ref. 24)

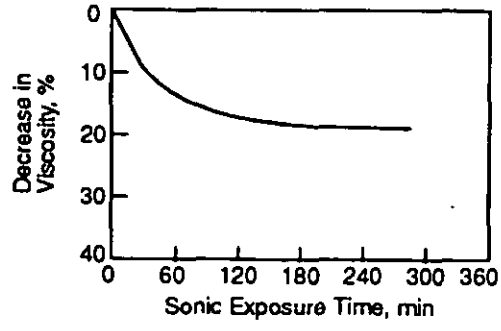

Reprinted by permission of Society of Tribologists and Lubrication Engineers. All rights reserved.

Figure 3-19. Effect of Sonic Irradiation on the Viscosity of a Typical MIL-H-5606 Hydraulic Fluid (Ref. 24)

Downloaded from http://www.everyspec.com

sel injector serves as both the pressurizing pump and the orifice. While excellent agreement between the pump-orifice test and the diesel injector test has been obtained for some fluids, wide differences have resulted for others. Higher viscosity fluids tend to show closer agreement between the two methods. This method has proved ineffective for MIL-H-5606 hydraulic fluid.

4. *Tapered-Plug Viscometer Method.* The tapered-plug viscometer method described in ASTM D 4741 (Ref. 23) uses a Ravenfield high shear rate tapered-plug viscometer to determine the viscosity of oils at 150°C (302°F) at a shear rate of $1 \times 10^6 s^{-1}$. The fluid to be tested is heated to the test temperature and fills the annulus between the close-fitting rotor and stator apparatus shown in Fig. 3-20. The rotor and stator have a matching taper to allow adjustment of the clearance between them in order to control the shear rate. The rotor turns at a fixed speed. The fluid viscosity is determined by measuring the reaction torque and referencing this torque to a standard viscosity-torque curve based on Newtonian fluids. Also this method can be used to determine the temporary viscosity loss due to shear rate, as discussed in par. 3-2.5.1.

3-2.6 LOW-TEMPERATURE PROPERTIES

As hydraulic fluids are cooled, they become more viscous and their flow becomes slower. If cooling is carried to sufficiently low temperatures, the fluids approach plastic solids. Many liquids, if cooled under prescribed conditions, begin to precipitate wax or separate components at a specific temperature. This temperature is called the cloud point. If cooling under prescribed conditions continues, a temperature is reached at which the oil will neither pour nor flow. By definition, the pour point is 3 deg C (5 deg F) above this temperature. The pour point approximates the lowest temperature at which a liquid will flow in a container of a given size. It is difficult to define pour point precisely because the transition from liquid to solid is gradual. Low-temperature operational capability is best defined by fluid viscosity.

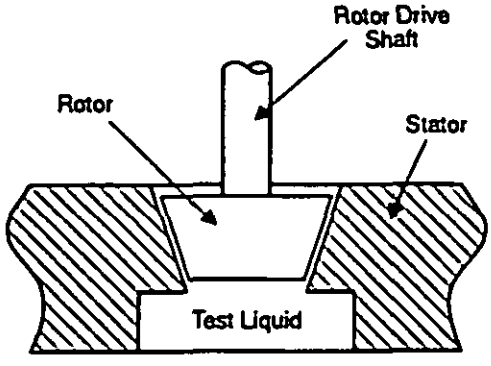

Copyright ASTM. Reprinted with permission.

Figure 3-20. Rotor and Stator Section of Tapered-Plug Viscosity Tester (Ref. 23)

3-2.6.1 Cloud Point

The cloud point is of interest for use at low temperatures. It is defined as the temperature at which wax or other dissolved solids begin to crystallize and become noticeable when liquids are chilled under specified conditions. Dissolved moisture can also cause clouding of a liquid on cooling and lead to erroneous results. Many liquids have no cloud point. Some base stocks have no waxy components, whereas other stocks may have some of the waxy components removed. The latter are referred to as deep dewaxed fluids.

3-2.6.2 Pour Point

The pour point is by definition 3 deg C (5 deg F) above the temperature at which the fluid ceases to flow. It may mark a temperature at which crystallization of wax has proceeded to such an extent that further lowering of the temperature would cause flow to cease (waxy pour point), or it may, with wax-free fluids, represent the temperature at which the viscosity is sufficiently high that further cooling would cause flow to cease (viscous pour point). Liquids that are free of wax or other components that can precipitate on cooling behave like Newtonian fluids even at low temperatures. The viscosity at the pour point is approximately the same for all fluids of this type and has been found to be in the range of 10^5 to 10^6 mm^2/s.

Most commercially available petroleum fluids have a waxy pour point rather than a viscous pour point. They are Newtonian fluids only when the temperature is above the point at which the wax begins to separate. The formation of waxy crystals does not mean the fluid has solidified. Flow has been prevented by the crystals, but if the liquid is agitated to rupture the crystal structure, the liquid will flow even though the temperature is below the pour point. The waxy pour point is dependent upon such factors as the rate of cooling and degree of agitation. Table 3-3 lists the minimum pour points required by six common military specifications for hydraulic fluids.

3-2.6.3 Freezing Point

For pure, or essentially pure, hydrocarbons and nonhydrocarbon base synthetics, the temperature at which solidification occurs is called the freezing point. This term is also frequently and loosely used for other petroleum products for which the proper term would be either the cloud point, the pour point, or the solid point. The freezing point is defined as the temperature at which a pure hydrocarbon passes from a liquid to a solid state. Test methods for determining freezing points usually apply to fuels, solvents, and other types of relatively pure hydrocarbons.

Downloaded from http://www.everyspec.com

TABLE 3-3. POUR POINT REQUIREMENTS OF SIX MILITARY SPECIFICATION HYDRAULIC FLUIDS

SPECIFICATION	FLUID	USE	MINIMUM POUR POINT	
			°C	°F
MIL-H-83282C	Synthetic hydrocarbon	Aircraft Missile	–55	–67
MIL-H-5606F	Petroleum	Aircraft	–60	–76
MIL-H-46170B	Synthetic hydrocarbon	Armored ground vehicles, Artillery	–54	–65.2
MIL-H-6083E	Petroleum	Artillery preservation and storage	–59	–74
MIL-H-53119	CTFE	Armored ground vehicles Aircraft, Artillery	–60	–76
MIL-H-87257	Synthetic hydrocarbon	Aircraft Missile	–60	–76

3-2.6.4 Test Methods for Low-Temperature Properties

A discussion of the tests of low-temperature properties follows:

1. *Cloud and Pour Points*

Test Methods. Federal Test Method 201 (Ref. 29)
ASTM D 97 (Ref. 30)
ASTM D 2500 (Ref. 31)

These methods describe the procedures used to determine the cloud point for liquids that are transparent in layers 38 mm (1.5 in.) in thickness and to determine the pour point for any petroleum fluid.

a. *Cloud Point*

Test Methods. Federal Test Method 201 (Ref. 29)
ASTM D 2500 (Ref. 31)

A sample of the fluid is placed in a test jar, heated at least 14 deg C (25 deg F) above the approximate cloud point, and then chilled in successively cooler baths. At intervals of 1 deg C (2 deg F) the sample is inspected for clouding. When a distinct cloudiness or haze appears at the bottom of the test jar, the temperature reading is recorded as the cloud point.

Precision. Duplicate results from one laboratory may differ by 2 deg C (4 deg F), and the results from two different laboratories may differ by 4 deg C (8 deg F) for gas oils. For all other oils results of duplicate tests should not differ by more than 6 deg C (10 deg F).

b. *Pour Point*

Test Methods. Federal Test Method 201 (Ref. 29)
ASTM D 97 (Ref. 30)

A sample of the fluid is placed in a test jar of 30 to 33.5 mm (1.18 to 1.32 in.) in diameter and heated to at least 46°C (115°F). The sample is then chilled in successively cooler baths. At intervals of 3 deg C (5 deg F) the jar is tilted and the fluid surface is inspected for movement. When the fluid reaches a temperature at which the jar can be tilted horizontally for 5 s with no movement, the temperature is recorded as the solid point. The pour point is the temperature 3 deg C (5 deg F) above the solid point temperature.

Precision. Results of the pour point from one laboratory may vary by 3 deg C (5 deg F) and from different laboratories by 6 deg C (10 deg F).

2. *Pour Stability Characteristics*

Test Method. Federal Test Method 203 (Ref. 32)

This method is used to determine the stable pour point of blends of winter grade motor oil and of certain types of hydraulic fluids.

A sample of the oil is placed in a glass jar in a bath and subjected to a schedule of temperature variations for up to 7 days. The lowest temperature at which no surface movement will occur when the sample is turned horizontally for 3 s (the solid point) is then determined. The stable pour point is recorded as the temperature 3 deg C (5 deg F) above the solid point. This method differs from the first method of this subparagraph in that the sample first undergoes a period of heating and cooling over a period of several days.

3. *Diluted Pour Point*

Test Method. Federal Test Method 204 (Ref. 33)

This method is used to indicate the flow characteristics of engine oils that have been diluted with aviation gasoline.

A sample of the oil is diluted to a mixture of 70% oil and 30% diluent. The diluent is a mixture of 80% naphtha and 20% xylene. The pour point is determined as outlined in ASTM D 97 (Ref. 30) or Federal Test Method 201 (Ref. 29) for cloud and pour points, which were the first tests discussed in this subparagraph.

Downloaded from http://www.everyspec.com

Precision. The same limits as set forth in ASTM or Federal Test Method for cloud and pour points apply to this method.

4. *Cloud Intensity at Low Temperature*

Test Method. Federal Test Method 202 (Ref. 34)

This method describes the procedure used to determine the ability of hydraulic fluids or highly refined light lubricating oils to remain free of turbidity at low temperatures.

A sample of the fluid and a standard are stored at −54°C (−65°F) (or lower if specified by the purchaser) for a specified period. It is then agitated and its turbidity is compared to that of the standard. The standard is a mixture of barium chloride, sulfuric acid, and sodium hydroxide. The turbidity of the sample is reported as less than, more than, or equal to that of the standard.

5. *Freezing Point*

Test Method. ASTM D 1015 (Ref. 35)

This method is used to measure precisely the freezing point of high-purity hydrocarbons. It involves the use of a refrigeration unit to cool the fluid, and liquid nitrogen is the preferred refrigerant. When the temperature of the fluid is approximately 10 deg C (18 deg F) above the expected freezing point, the rate of flow of the refrigerant is reduced so that the rate of cooling is 1 deg C (1.8 deg F) in about one to three minutes. At approximately 5 deg C (9 deg F) above the anticipated freezing point, crystallization is induced by inserting either a chilled rod or pre-test-frozen crystals of the test fluid. The beginning of crystallization is accompanied by a halt in the cooling of the fluid. The fluid temperature stabilizes at the freezing point as crystallization continues.

Precision. Results from the same operator and apparatus should not vary more than ±0.005 deg C (0.009 deg F). Between different operators and apparatus, the results should not vary more than ±0.015 deg C (0.027 deg F).

3-2.6.5 Significance of Freezing and Pour Points

Many hydraulic systems are required to operate in extremely cold weather. Under these conditions the oil must flow to the suction side of the hydraulic pump on start-up of the system. The pour point, being the lowest temperature at which a liquid will flow under normal gravity head, must be considered in selecting a hydraulic fluid for cold weather applications. In most cases the pour point is too low to be acceptable for hydraulic system operations.

The cloud point, on the other hand, is of little significance. Formation of the waxy crystals may tend to plug up small orifices, but this fact is considered in the design of hydraulic systems for low-temperature operation. The clouding of liquids, however, sometimes causes the clogging of filters if no preheating facilities are available.

Although it appears that the freezing point is a significant consideration when selecting a fluid for low-temperature operation, it is actually seldom used for that purpose. In practical application, the pour point is considered to be more significant. Rather, the freezing point is used to determine the purity of the test liquid. A knowledge of the purity of the hydrocarbons is often used as a manufacturing and quality control tool as well as to determine the suitability of the liquid for use as reagent chemicals or for conversion to other chemical intermediates or finished products.

3-2.7 FLAMMABILITY CHARACTERISTICS

The measurement of the flammability characteristics of a hydraulic fluid is complex. The degree of flammability is influenced by the characteristics of the liquid, the source of the ignition, whether the liquid has vaporized, and many other factors. The potential danger from hydraulic fluids is frequently great because of the high pressures involved in many systems. Fracture of hydraulic lines or leakage from faulty connections can form a fine spray of liquid which is readily ignitable. Numerous tests have been developed to determine the flammability characteristics of liquids under both laboratory conditions and simulated operating conditions.

3-2.7.1 Flash and Fire Points

The flash and fire points are the most common laboratory measurements of the flammability of a liquid. The flash point is the minimum temperature at which sufficient liquid is vaporized under specified conditions to create a mixture that will burn when exposed to an open flame. As the name "flash" indicates, burning at this point is only an instantaneous flash. The fire point, however, is the minimum temperature at which sufficient vapor is continuously generated to sustain combustion for five seconds. As will be shown, different methods for determining the flash and fire points are available for fluids with different characteristics. Testing the same fluid by different methods can give very different results; therefore, it is important to specify the test method used when discussing the results. Table 3-4 lists the flash points for some common US Military Specifications for hydraulic fluids.

3-2.7.1.1 Test Methods for Flash and Fire Points

A discussion of several methods used to determine flash and fire points follows:

1. Cleveland Open Cup Method

Test Methods. Federal Test Method 1103 (Ref. 36)
ASTM D 92 (Ref. 37)
ISO 2592 (Ref. 38)

These methods describe a procedure used to determine the flash and fire points of petroleum products except fuel oils and those products having an open cup flash point below 79°C (175°F).

The test cup is filled with the sample and the temperature of the sample is increased, first rapidly and then at

TABLE 3-4. FLAMMABILITY CHARACTERISTICS OF SOME MILITARY SPECIFICATION HYDRAULIC FLUIDS

TEST	TEST METHOD	MIL-H-5606F	MIL-H-83282C	MIL-H-53119	MIL-H-87257	MIL-H-46170B	MIL-H-6083E	MIL-B-46176A
Flash Point Open cup Temperature, °C	ASTM D 92	(82 min Closed cup D 93)	205 min	None	160 min	Type I, 218 min Type II, 204 min	(82 min Closed cup D 93)	204 min
Autoignition Temperature, °C	ASTM E 659	226	345 min			343 min	226	396
Linear Flame Propagation Rate, mm/s	MIL-H-83282	0.95	3.0 max	None	4.0 max	3.0 max	0.95	None
Hot Manifold Ignition Temperature (Drip), °C	FTM 6053	482	504	925 min		504	482	493
High-Temperature, High-Pressure Spray Ignition	FTM 6052	Ignites	If ignited, self-extinguishing	Does not ignite	If ignited, self-extinguishing	If ignited, self-extinguishing	Ignites	Does not ignite
Low-Pressure Spray		Ignites	If ignited, self-extinguishing	Does not ignite	If ignited, self-extinguishing	If ignited, self-extinguishing	Ignites	
Heat of Combustion, kJ/kg	ASTM D 240	4.2×10^4	4.1×10^4	5.6×10^3		4.1×10^4	4.2×10^4	

Downloaded from http://www.everyspec.com

Downloaded from http://www.everyspec.com

a slower, constant rate as the flash point is approached. At 2-deg-C (5-deg-F) intervals a small flame is passed across the cup in a prescribed manner. The lowest temperature at which application of the test flame causes vapors above the surface of the sample to ignite is the flash point. The test is continued until the application of the test flame causes the fluid to ignite and burn for at least 5 s. That temperature is the fire point. A sketch of the Cleveland Open Cup apparatus is shown in Fig. 3-21.

Precision. Results should not be considered suspect unless they differ by more than the following amounts:

a. Repeatability
   Flash point: 8 deg C (14 deg F)
   Fire point: 8 deg C (14 deg F)
b. Reproducibility
   Flash point: 17 deg C (30 deg F)
   Fire point: 14 deg C (25 deg F)

2. *Tag Closed Cup Tester Method*

Test Methods. Federal Test Method 1101 (Ref. 39)
ASTM D 56 (Ref. 40)

These methods describe procedures used to determine the flash point of fluids that flash below 93°C (200°F), with the exception of products classified as fuel oils.

The sample is placed in the cup of the tester; the lid is closed; and the temperature is increased at a slow, constant rate. A small flame is directed into the cup at 0.5-deg-C (1-deg-F) intervals below 60°C (140°F) or 1-deg-C (2-deg-F) intervals above that temperature. The lowest temperature at which the application of the test flame causes a vapor above the sample to ignite is the flash point. Fig. 3-22 shows a sketch of the Tag Closed Cup Tester.

Precision. Results should not be considered suspect unless they differ by more than the following amounts:

a. Repeatability
   Below 60°C (140°F): 1.1 deg C (2 deg F)
   Above 60°C (140°F): 1.7 deg C (3 deg F)
b. Reproducibility
   Below 13°C (55°F): 3.3 deg C (6 deg F)
   13 to 59°C (55 to 139°F): 2.2 deg C (4 deg F)
   60 to 93°C (140 to 199°F): 3.3 deg C (6 deg F)

3. *Pensky-Martens Closed Cup Tester Method*

Test Methods. Federal Test Method 1102 (Ref. 41)
ASTM D 93 (Ref. 42)
ISO 2719 (Ref. 43)

These methods describe procedures for the determination of the flash point of fuel oils, lubricating oils, suspensions of solids, liquids that tend to form a surface film under test conditions, and other liquids with the Pensky-Martens Closed Cup Tester shown in Fig. 3-23.

The sample is placed in the cup of the tester; the lid is closed; and the sample is heated at a slow, constant rate with continual stirring. A small flame is directed into the

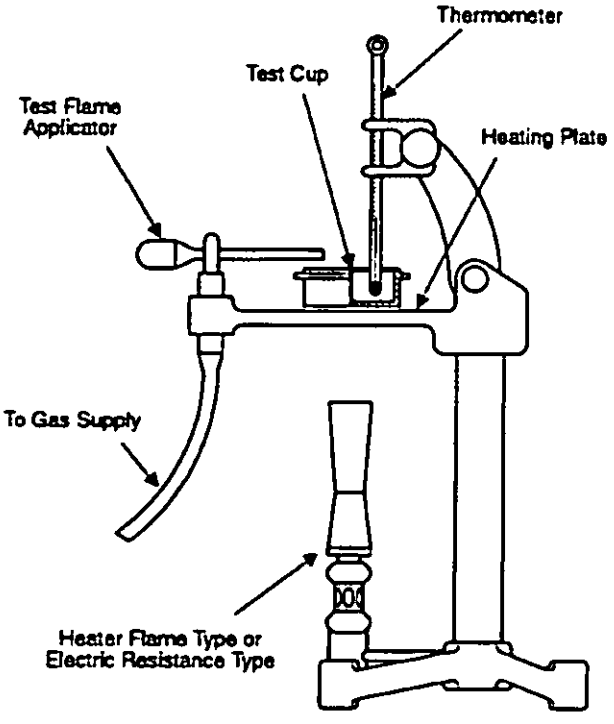

Copyright ASTM. Reprinted with permission.

Figure 3-21. Cleveland Open Cup Apparatus (Ref. 37)

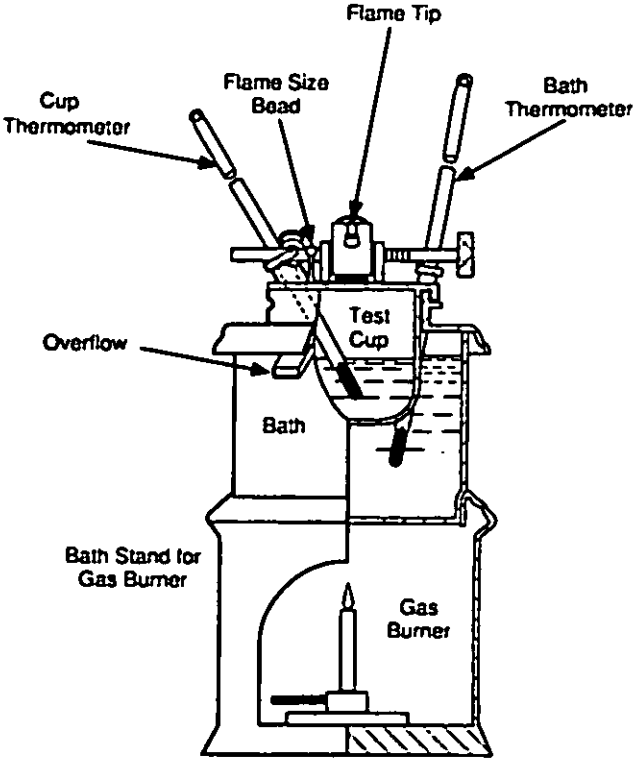

Copyright ASTM. Reprinted with permission.

Figure 3-22. Tag Closed Cup Tester (Ref. 40)

Downloaded from http://www.everyspec.com

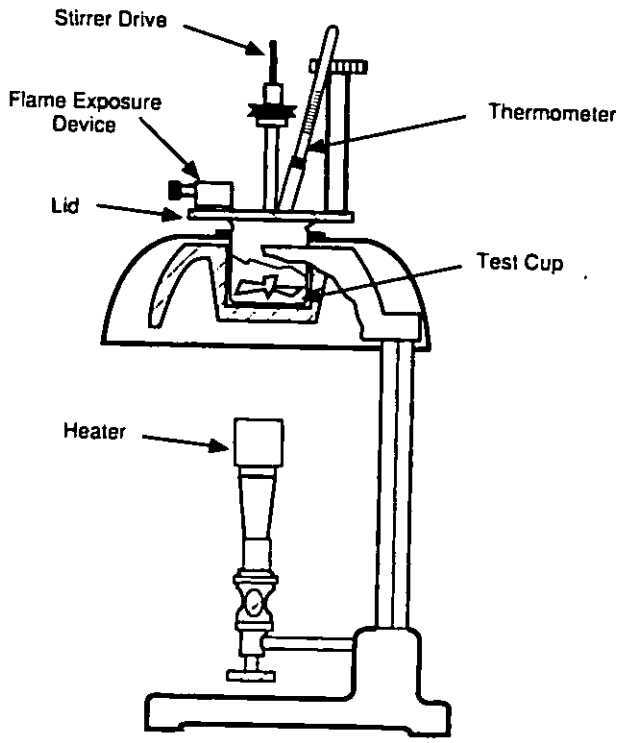

Copyright ASTM. Reprinted with permission.

Figure 3-23. Penske-Martens Closed Cup Tester (Ref. 42)

cup at 2.8-deg-C (5-deg-F) intervals with simultaneous interruption of stirring. The test flame is applied by operating the mechanism on the cover that opens a shutter, lowers the test flame through the opening into the vapor space of the cup in 0.5 s, leaves the flame in place for 1 s, and quickly retracts the flame, and closes the shutter. The flash point is recorded as the temperature of the sample at the time the test flame application causes a distinct flash in the interior of the cup.

Precision. Results should not be considered suspect unless they differ by more than the amounts that follow:

MATERIAL	FLASH POINT RANGE	REPEAT-ABILITY	REPRODUC-IBILITY
Suspensions of solids	35 to 43°C (95 to 110°F)	2 deg C (4 deg F)	3.5 deg C (6 deg F)
All others	Below 104°C (220°F)	2 deg C (4 deg F)	3.5 deg C (6 deg F)
	Above 104°C (220°F)	5.5 deg C (10 deg F)	8.5 deg C (15 deg F)

3-2.7.1.2 Significance of Flash and Fire Points

Liquids, as such, do not burn, but in general they must first be vaporized in order to burn. The flash and fire points are measures of the minimum temperature at which sufficient vapor will be given off by the liquid so that a combustible mixture of air and vapor is obtained. Thus the relative fire and explosion hazards can be estimated from the flash and fire points.

Flash and fire points are also useful for evaluation of used liquids. If a liquid undergoes a rise in flash or fire point while in service, loss of the lighter fractions by evaporation is indicated. A lower flash or fire point is an indication that the liquid has become contaminated with a more volatile product, such as a fuel, or that some of the heavier fractions have broken down. The flash and fire points are also aids in establishing the identity of unknown products.

3-2.7.2 Autoignition Temperature

The autoignition temperature (AIT) is the minimum temperature at which a material will ignite in air due to an exothermic oxidation reaction without the presence of an open flame. It is the lowest temperature to which the material must be raised so that the heat generated by the exothermic oxidation reaction is greater than the heat lost to the surroundings. The AIT is also referred to as the spontaneous ignition temperature, the self-ignition temperature, and the autogenous ignition temperature. Table 3-4 lists the AITs for some common fluids.

3-2.7.2.1 Test Method for the AIT

Discussion of a test method for the AIT follows:

Test Methods. Federal Test Method 1152 (Ref. 44)
ASTM E 659 (Ref. 45)

This method describes determination of the hot- and cool-flame autoignition temperatures of a liquid chemical in air at atmospheric pressure in a uniformly heated vessel.

The apparatus shown in Fig. 3-24 is heated to a predetermined temperature. A 100-μL sample of the test liquid is injected into the test flask with a hypodermic syringe. The room is darkened as the liquid is injected. If ignition does

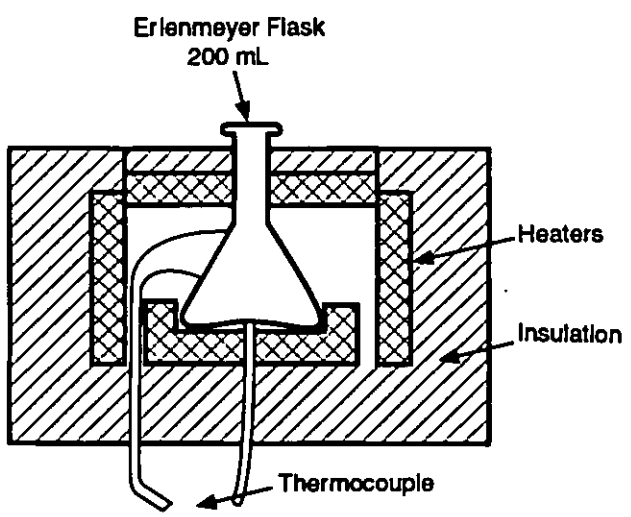

Figure 3-24. Autoignition Temperature Test Apparatus

Downloaded from http://www.everyspec.com

not occur within 10 min, the sample should be considered nonflammable at the temperature of the gas in the flask. The flask is completely purged, the temperature is raised approximately 30 deg C (54 deg F), and a new sample is injected. This operation is repeated until ignition occurs.

Precision. The following criteria should be used to judge the acceptability of results with 95% confidence:

a. Repeatability. 2% of the temperature in °C
b. Reproducibility. 5% of the temperature in °C.

3-2.7.2.2 Significance

The autoignition temperature is a laboratory measurement and is very sensitive to the procedure used for its determination. In practice, autoignition depends on many factors, such as the nature of the surface contacting the liquids, the composition of the combustible air mixture, and the pressure at the area of contact. Researchers at the US Bureau of Mines have found that the AIT of a MIL-H-5606 liquid increases appreciably with a decrease in environmental pressure below one atmosphere, but it changes little with increasing environmental pressures above one atmosphere; this is shown in Fig. 3-25 (Ref. 46). Not all liquids will have the marked change in slope of the AIT/pressure curve near atmospheric pressure shown on Fig. 3-25. Some liquids will have a gradual decrease in minimum spontaneous ignition temperature with pressure increase and may or may not exhibit a slope change near one atmosphere. For example, Fig. 3-26 shows that the AIT of a chlorinated phenyl methyl silicone liquid is essentially a linear function of pressure. Figs. 3-25 and 3-26 also show that the nature and type of surface in contact with these liquids have little or no effect on the change in the AIT with pressure. Also the AIT generally decreases with increasing environmental oxygen content (Ref. 47), as shown in Fig. 3-27.

3-2.7.3 *Effects of Evaporation on Flammability* (Pipe Cleaner Test)

Discussion of the Pipe Cleaner Test follows:

Test Methods. Federal Test Method 352 (Ref. 48)
SAE AMS 3150 (Ref. 49)

These methods are used to determine the effect of evaporation on the flammability of a liquid petroleum product, although they were initially developed to determine the flammability of absorbant materials, such as wiring insulation, when they had become soaked with various hydraulic fluids. A pipe cleaner, soaked with the fluid, is passed repeatedly through a flame at a rate of 25 cycles per minute and the number of passes required for ignition is noted. The fluid is then stored in an oven for the time and at the temperature required by the fluid specification, and its flammability is rechecked. Four repeats of the test are made before and after heating in the oven. The results are reported as the average number of cycles necessary for a self-sustaining flame to be achieved on the pipe cleaner both before and after partial evaporation in the oven. A sketch of the test apparatus is shown in Fig. 3-28.

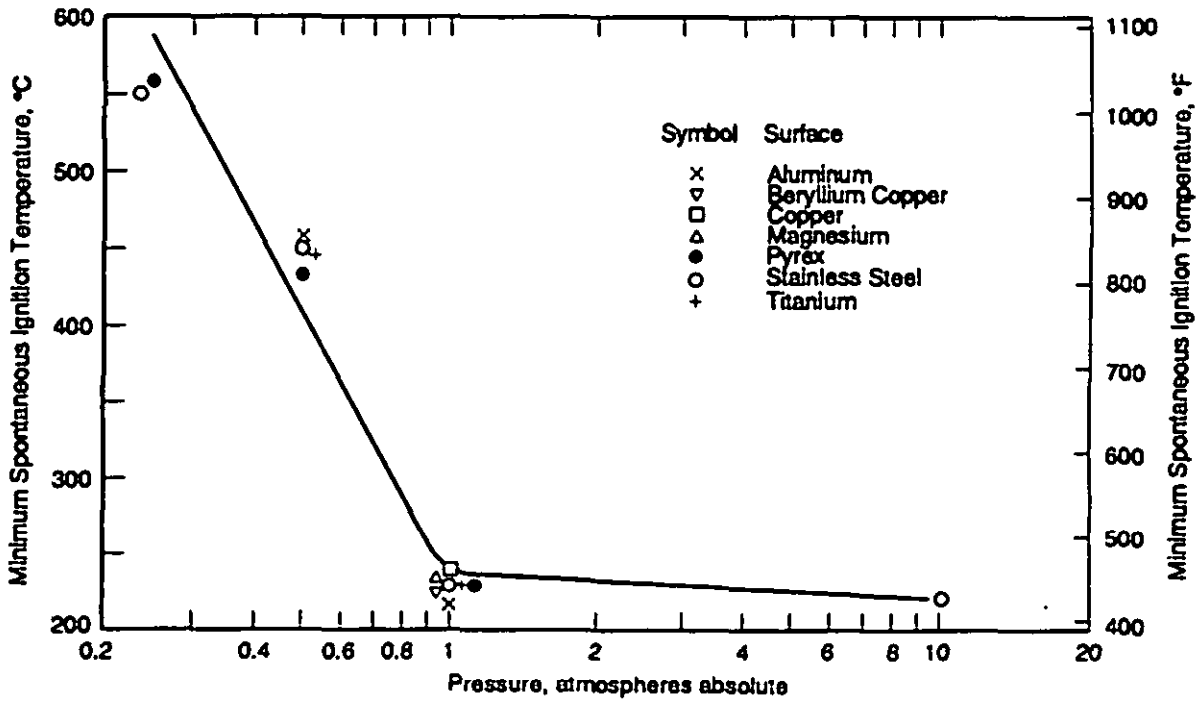

Figure 3-25. Spontaneous Ignition Temperature of a Typical MIL-H-5606 Fluid in Air in Contact With Various Surfaces as a Function of Test Chamber Pressures (Ref. 46)

Downloaded from http://www.everyspec.com

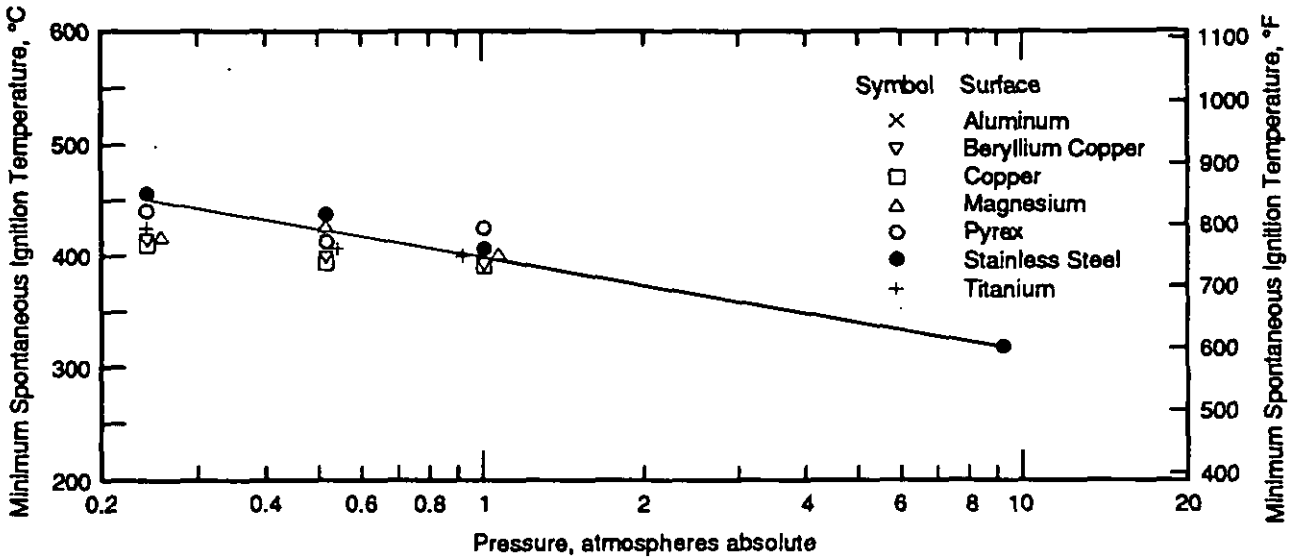

Figure 3-26. Spontaneous Ignition Temperature of a Chlorinated Phenyl Methyl Silicone in Air in Contact With Various Surfaces as a Function of Test Chamber Pressure (Ref. 46)

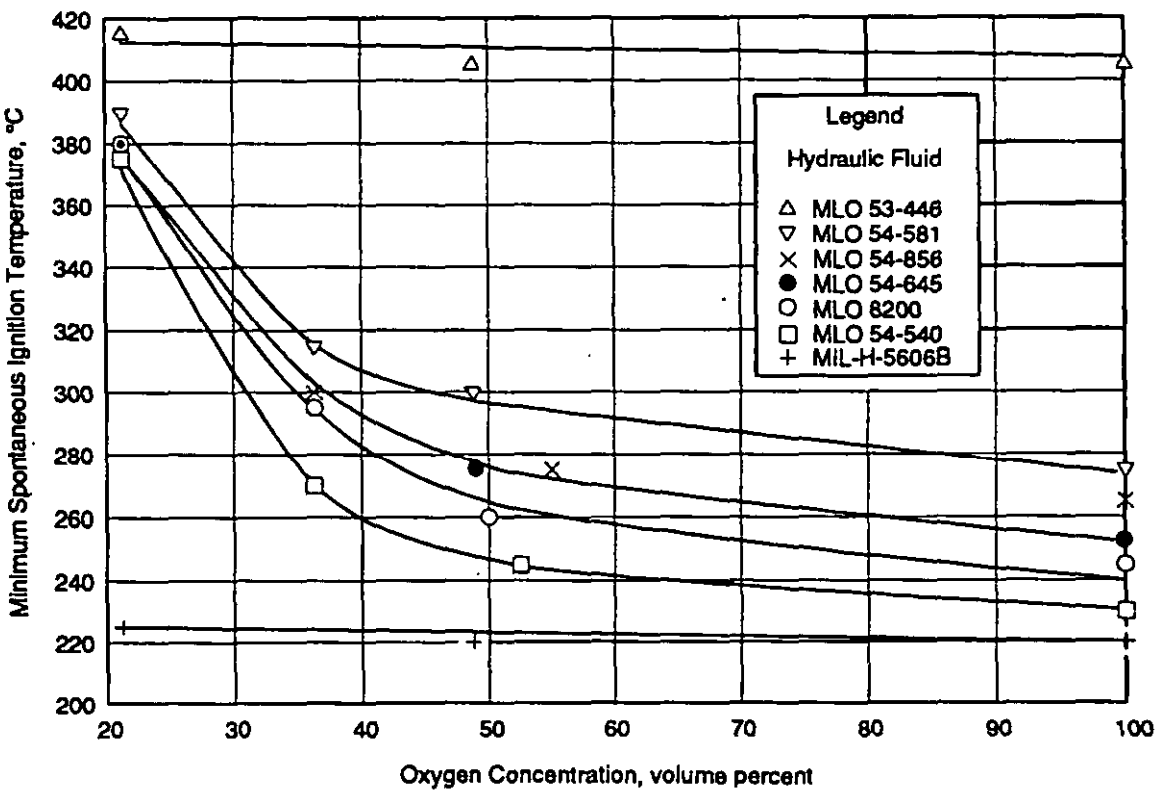

Figure 3-27. Spontaneous Ignition Temperature of Seven Hydraulic Fluids at Atmospheric Pressure in Contact With a Pyrex Glass Surface as a Function of Oxygen Concentration (Ref. 47)

Downloaded from http://www.everyspec.com

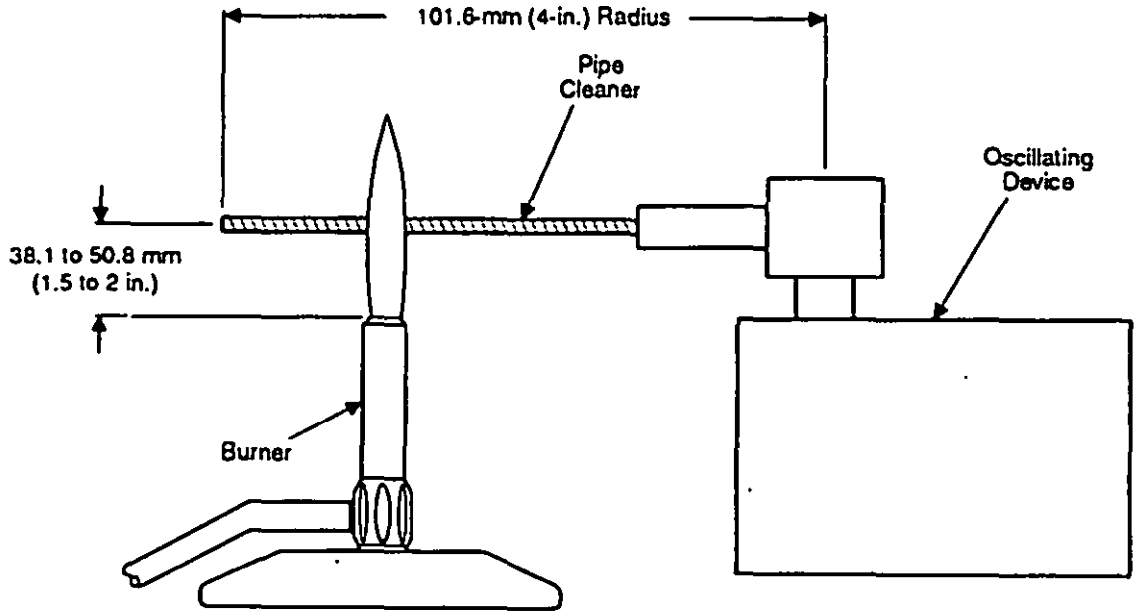

Figure 3-28. Test Apparatus for the Pipe Cleaner Evaporation Test

3-2.7.4 Flammability Tests Under Simulated Service Conditions

There are many complex factors involved in assessing the flammability of hydraulic fluids, and no one single test can be used to evaluate all of the types of liquids under all of the expected conditions of use. The flash and fire points are laboratory tests that bear little resemblance to actual operating conditions. As a result, several different methods have been developed to test the flammability of liquids. Most of these tests were designed to simulate conditions in aircraft resulting from a broken hydraulic line that is spraying liquid onto various sources of ignition. Although the tests were developed primarily for the aircraft industry, they are useful in any industry in which hydraulic liquids are exposed to ignition sources. Three of the more common of these tests—the spray ignition, the hot manifold or hot surface ignition, and the incendiary gunfire test—were described in MIL-F-7100, *Fluid, Hydraulic, Nonflammable, Aircraft* (Ref. 50), an early specification for a fire-resistant hydraulic fluid. It was issued December 1950 and cancelled February 1958. No products were ever produced that conformed to the specification. The fire-resistance tests in the specification (described briefly here) are still used by many companies involved in hydraulic fluid work, although they vary from company to company.

Other tests are described in the literature, in various military specifications, and in ASTM special publications. Many of these tests are similar in nature but differ in their apparatus and procedures. A major problem confronting industry today is the lack of test standardization and interpretation of test results to measure fire resistance of fluids adequately. A review of the general types of tests and procedures and the efforts toward standardization is given in Ref. 51.

A discussion of some of these tests follows:

1. *Spray Ignition Tests*

There are high-pressure and low-pressure versions of this test:

a. *High-Pressure Spray Test.* (Federal Test Method 6052 (Ref. 52)). The liquid is pressurized to 6895 kPa (1000 psi) with nitrogen and forced through an orifice 0.37 mm (0.0145 in.) in diameter. Attempts are made to obtain ignition by application of an oxyacetylene torch flame at various standard distances from the nozzle. At each position a report is made citing whether or not the fluid will ignite, will flash with difficulty, or flashes readily. If flashing occurs, the distance from the orifice at which the ignition or flashing is carried downstream from the test flame area and whether the flashing is self-extinguishing or results in a sustained fire are also reported. A pictorial sketch of the high-pressure spray ignition test apparatus is shown in Fig. 3-29.

b. *Low-Pressure Spray Test* (Ref. 4). A fire is started in a metal pan filled with oil-soaked rags and is allowed to burn. The liquid to be tested is sprayed toward the fire from the reservoir of an ordinary paint spray gun several meters from the fire. The increased intensity of the fire is then used as a measure of the flammability of the liquid. A pictorial sketch of this low-pressure spray ignition test apparatus is shown in Fig. 3-30.

c. *Low-Pressure Spray Test.* (SAE AMS 3150 (Ref. 49)). This low-pressure, low-temperature spray test specifies the use of a Binks Thor No. 7 paint spray gun with a 1.8-mm (0.070-in.) orifice adjusted to produce a cone-shaped spray at 275 kPa (40 psi) pressure. The flame source

Downloaded from http://www.everyspec.com

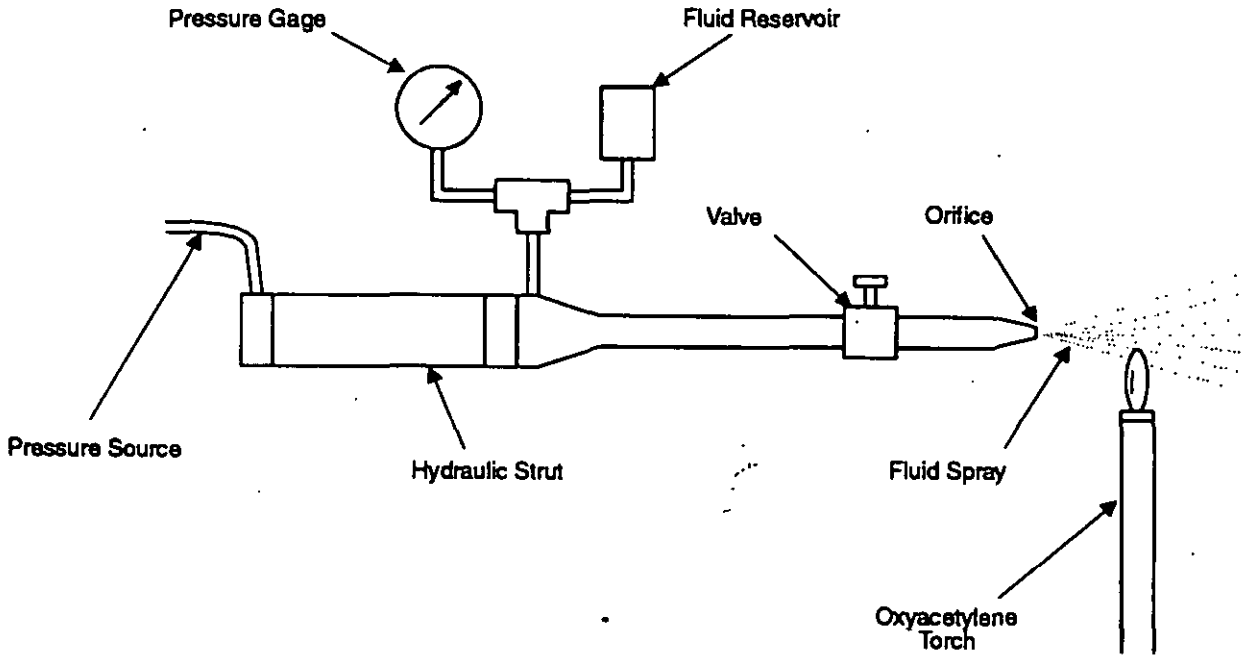

Figure 3-29. High-Pressure Spray Ignition Test Apparatus

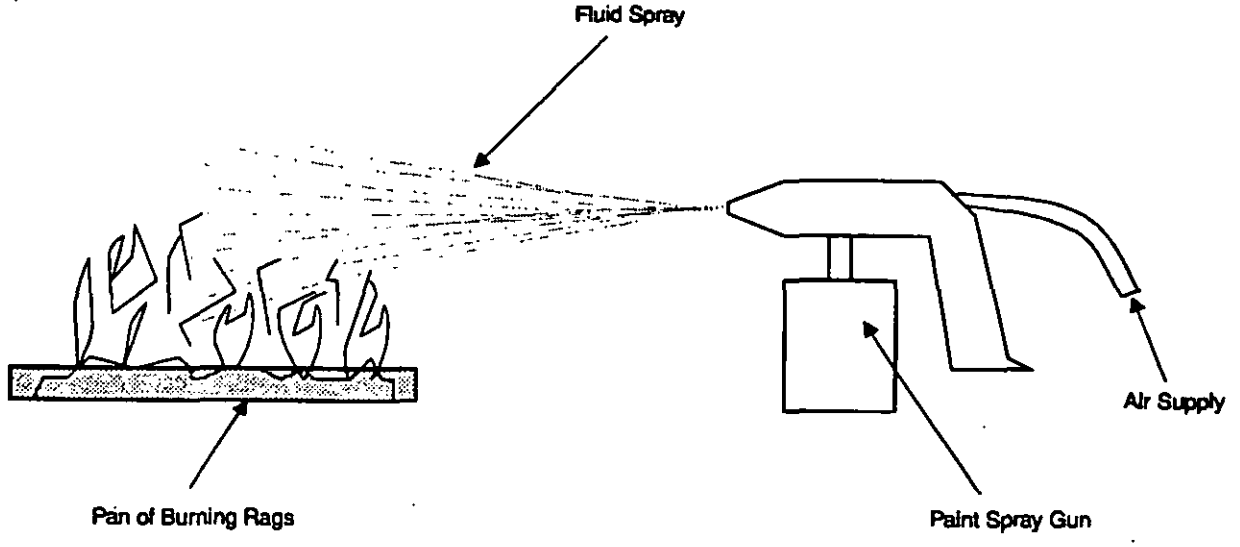

Figure 3-30. Low-Pressure Spray Ignition Test Apparatus

for the test is cotton waste soaked in engine oil. The results are expressed as increase, no increase, or decrease in the flame of the burning waste when the fluid mist is introduced into the fire. A sketch of this test setup is shown in Fig. 3-31.

d. *Low-Pressure Spray Test.* (ASTM D 3119 (Ref. 53)). This test procedure calls for an airless (rotary) paint spray gun manufactured by either Electro Engineering Products or Napco.* The ignition source is a natural-gas-air laboratory bunsen burner. The temperature of the test fluid is specified at 66°C (150°F). The results of the test are reported as violent fire, sporadic fire, fire at torch, or no fire. This test setup is illustrated in Fig. 3-32. Table 3-5 lists some test results from this method (Ref. 54). This standard was cancelled in 1990.

e. *Low-Pressure Spray Test.* (Rowland and Sargent Method (Ref. 51)). This method uses an airless paint spray gun. The gun generates a flat, well-defined atomized spray by pumping the liquid onto a high-speed rotating disk, which propels the liquid as small droplets through a slot in the side of the gun. A glassblower's torch 102 mm (4 in.)

*The use of a product name in no way suggests an endorsement of the product by the US Government.

Downloaded from http://www.everyspec.com

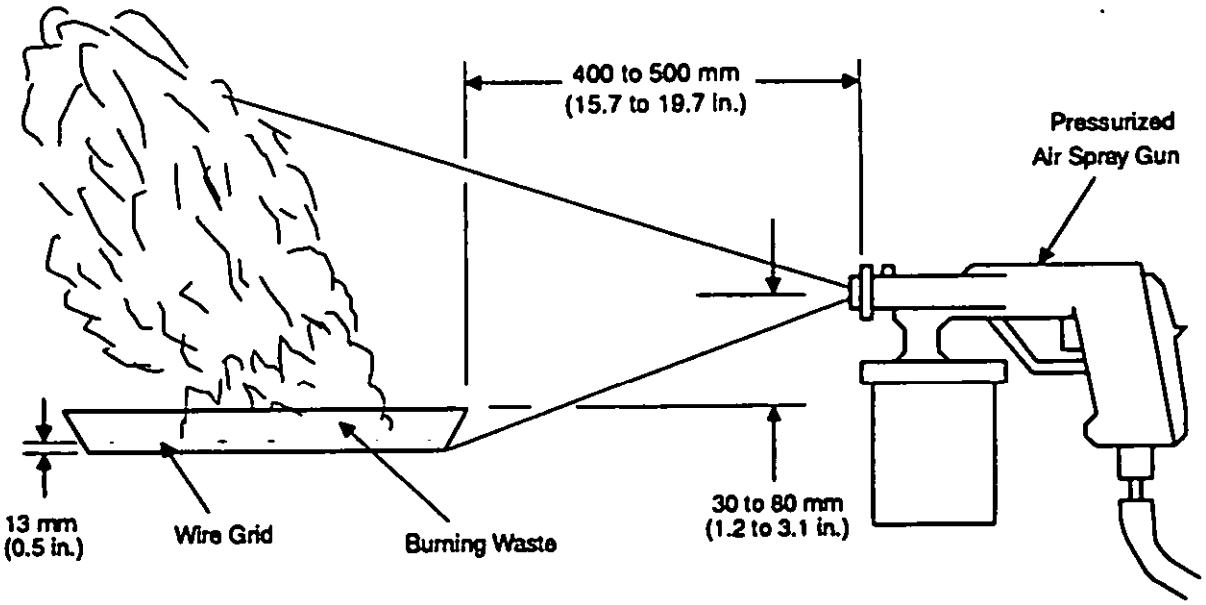

Figure 3-31. Spray Flammability Test Setup for SAE AMS 3150

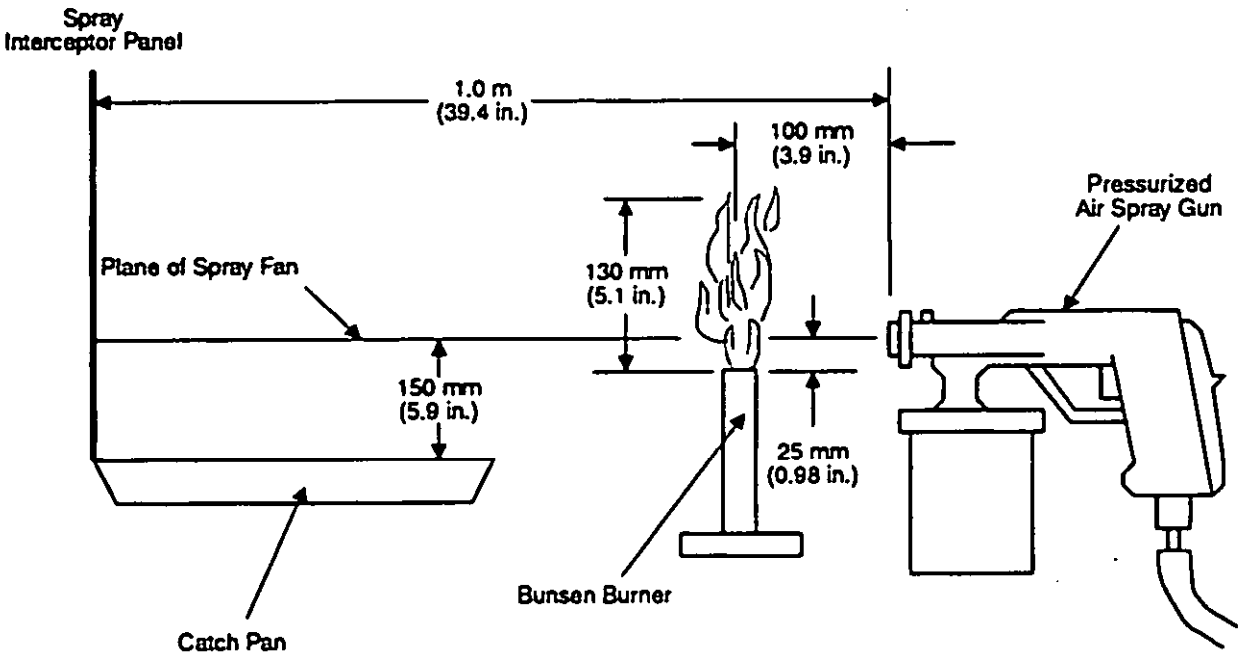

Figure 3-32. Spray Flammability Test Setup for ASTM D 3119

from the nozzle is the ignition source. The amount of flame produced in the spray is used as a measure of the flammability of the liquid. This method has the advantages of requiring only electricity, a source of ignition, and can be performed in a laboratory hood.

As with many tests intended to assess the flammability of hydraulic fluids, the tests described in c and d have significant shortcomings. These include a poorly defined test environment (airflow, humidity, and ambient temperature), qualitative rather than quantitative reporting, and the use of commercial spray guns, which provides little control over important characteristics such as droplet size, spray cloud density, and droplet velocity (Ref. 54).

2. *Manifold Ignition Test.* (Federal Test Method 6053 (Ref. 55)). In this procedure the test fluid is dripped onto the surface of a steel tube that has been heated to 704°C (1300°F). (In practice the temperature can be varied to compare different fire-resistant or nonflammable fluids). After

Downloaded from http://www.everyspec.com

TABLE 3-5. LOW-PRESSURE SPRAY FLAMMABILITY TEST RESULTS OF SOME TYPICAL HYDRAULIC FLUIDS (Ref. 54)

TEST NUMBER	FLUID TYPE	FLUID TEMPERATURE °C	FLUID TEMPERATURE °F	BURNER FLAME	RESULTS
1	MIL-H-2104	23	74	Yellow	Spasmodic Fire
2	MIL-L-2104	66	150	Yellow	Violent Fire
3	MIL-L-2104	66	150	Blue	Violent Fire
4	MIL-L-2104	66	150	Blue/Yellow	Violent Fire
5	MIL-H-5606	31	88	Yellow	Violent Fire
6	MIL-H-5606	66	150	Yellow	Violent Fire
7	Phosphate Ester No. 1	24	76	Yellow	Spasmodic Fire
8	Phosphate Ester No. 2	66	150	Yellow	Spasmodic Fire
9	Phosphate Ester No. 3	66	150	Yellow	Spasmodic Fire

Reprinted with permission. Copyright © by Oklahoma State University, School of Mechanical and Aerospace Engineering.

the tube has reached the test temperature, 10 mL of the fluid is applied over a period of 40 to 60 s. The test height and location on the tube can be varied to examine changes in the ignition characteristics of the fluid. Results are reported as

a. Flashes or burns on the tube but does not after dripping from tube

b. Does not flash or burn on the tube but does after dripping from the tube

c. Does not flash or burn on the tube or after dripping from the tube.

A drawing of the manifold test setup is shown in Fig. 3-33.

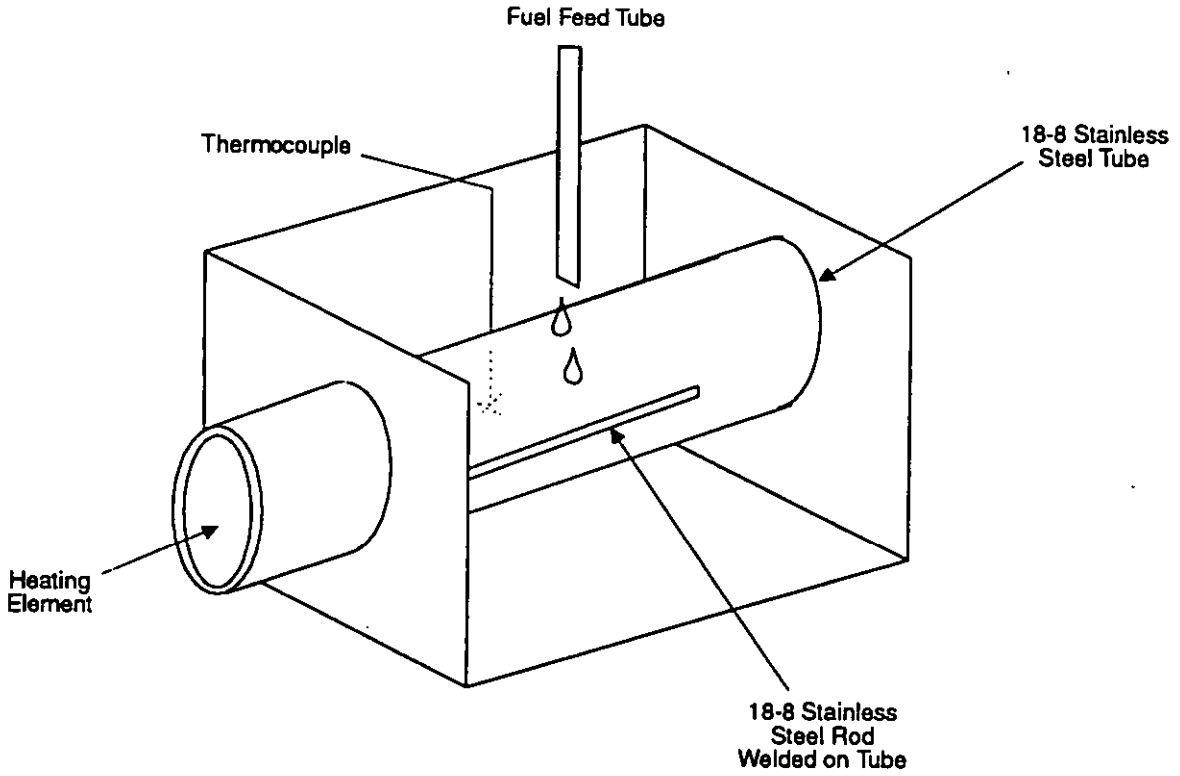

Figure 3-33. Hot Manifold Test Apparatus

Downloaded from http://www.everyspec.com

3. *Incendiary Gunfire Tests.* (MIL-F-7100 (Ref. 50)). The liquid is placed in a 0.9-m (3-ft) long, 16-mm (5/8-in.) outside diameter aluminum alloy tube and pressurized to 7000 kPa (1000 psi) with nitrogen. A cal. .30 incendiary bullet is fired from a range of 45 m (150 ft) into the tube. Observations of burning or explosion of the liquid are made and are reported as a measure of the flammability of the liquid. A modification of this technique employs 20-mm, high-explosive incendiary tracer projectiles fired into partly filled fluid containers under pressure (Ref. 56).

4. *Diesel Engine Compression Ignition.* (MIL-H-19475 (Ref. 57)). It has been found that high-pressure air suddenly expanding into a confined space containing organic matter such as a hydraulic fluid can cause ignition and/or explosion, depending on the rate of pressure release, volume of air, and quantity of organic material. The phenomenon of compression ignition can be important in generating fires in hydraulic systems. Accumulators, pressure gages, and other closed-end equipment are especially susceptible to this phenomenon.

This test is described in military specifications for hydraulic fluids for naval aircraft catapult-launching systems. The test is a modification of the ASTM CFR Cetane rating engine test described in *ASTM Manual of Engine Test Methods for Rating Fuels.* (Ref 58). A sample of the liquid is injected into a variable-compression diesel engine, and the engine is then turned over at various compression ratios. The lowest compression ratio for combustion of the liquid is reported as a measure of the flammability of the fluid. The higher the compression ratio, the more resistant the liquid is to compression ignition.

5. *Shock Tube or Piping System Test.* (MIL-H-22072 (Ref. 59)). In this procedure, for a fire-resistant hydraulic fluid, a small amount of steel wool soaked with the liquid is placed at the closed end of a pipe. By use of high-pressure air and a fast-opening valve, a shock wave is introduced and directed down the pipe. Combustion of the liquid on the steel wool can be determined by a rapid rise in temperature of the steel wool or by examination at the end of the test. Several repeat tests are conducted, and the results are reported as the ratio of the number of times that fire occurred to the number of tests tried at a given temperature. The fewer times the liquid burns, the more resistant it is to shock wave ignition. Reproducible results have been difficult to obtain in this test.

6. *Linear Flame Propagation Rate.* (MIL-H-83282 (Ref. 60)). In this procedure the tendency of the fluid to propagate a flame on a porous substrate or wicking material is evaluated. The procedure considers the fact that a decrease in the viscosity of the fluid adjacent to the flame increases wicking and increases the release of ignitable vapors. The same principle is involved in burning a candle. The noncombustible wicking material (in this case, a ceramic fiber cord) is soaked in the test fluid and then placed on the test apparatus shown in Fig. 3-34. The sample cord is ignited near one of its supports with a commercially

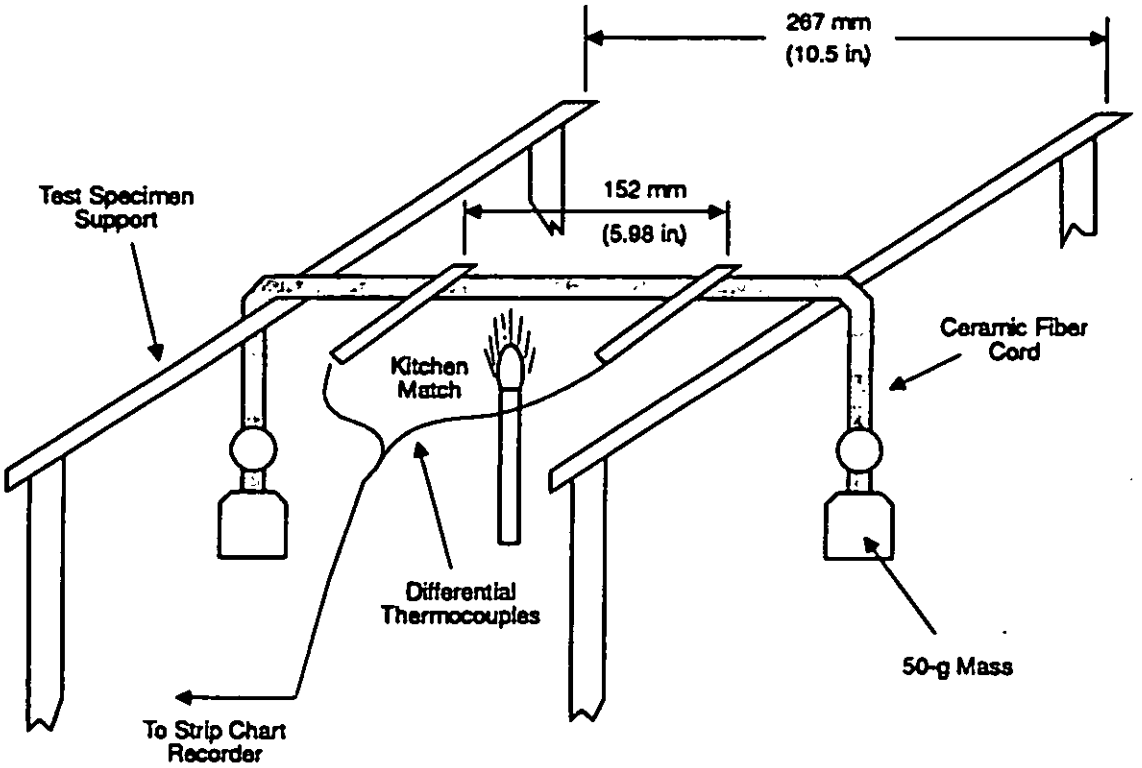

Figure 3-34. Apparatus for Determination of Linear Flame Propagation Rate (Ref. 60)

Downloaded from http://www.everyspec.com

available match. The time required for the flame to advance from the first to the second thermocouple is used to calculate the linear flame propagation rate in cm/s. The results indicate the rate at which a flame would propagate through insulation or other porous, noncombustible material that has become saturated with the hydraulic fluid.

3-2.7.5 Fire-Resistant Liquids

The development of liquids that are nonflammable or highly fire-resistant is the area of hydraulic fluid research that is receiving the greatest amount of attention. As late as 1950, fire-resistant hydraulic fluids were uncommon. For safety reasons insurance companies and Government and industrial safety agencies have encouraged the use of fire-resistant fluids in Government, industrial, and agricultural equipment. Fire-resistant liquids should not be confused with high-temperature liquids. A fire-resistant liquid is one that will not ignite readily and shows little tendency to propagate flame, whereas a high-temperature liquid will not significantly change its properties at "high temperatures". Water is a fire-resistant liquid, but it is not a high-temperature liquid.

One of the fundamental properties of petroleum liquids is their flammability. Although the flammability characteristics of petroleum liquids can be modified by the use of special refining procedures (Ref. 47) and/or the use of additives, fluids of this type have not shown considerable improvement in fire resistance over MIL-H-5606-type hydraulic fluids (Ref. 61).

Fire-resistant hydraulic fluids are those formulated specifically to provide enhanced fire-resistant characteristics. These fluids are categorized in ANSI B93.5M (Ref. 62) and ISO 6743/4 (Ref. 63) as follows:

1. *High Water Content Fluids (HFA)*:

These are HFA solutions (HFAS) and HFA emulsions (HFAE) containing more than 80% water. Their service temperature range is generally 5 to 50°C (41 to 122°F). The HFAE fluids—often termed oil-in-water emulsions—generally have viscosities similar to those of water and relatively poor lubrication characteristics. Therefore, they are usually unsuitable for high-pressure applications.

The HFAS fluids are true solutions, generally using synthetic oils. They may contain thickeners and other additives that allow their use in high-pressure systems. These fluids require regular monitoring of the water content since their performance characteristics depend on a relatively narrow ratio of water and additives. Some HFAS fluids contain up to 99% water and use additives that are biodegradable. Biocides are normally added to prevent microbial growth that can degrade the fluid and the system components as well as generate a very unpleasant odor.

2. *Water-in-Oil Emulsions (HFB)*:

The HFB fluids consist of microscopic water droplets suspended in a continuous oil phase. They generally contain about 40% water, but the figure may go as high as 60%. Their operating range is 5 to 60°C (41 to 140°F). They contain special emulsifiers, stabilizers, inhibitors, and biocides. Viscosity, stability, and fire resistance are highly dependent on the water content of any specific formulation, so this factor must be monitored carefully. Loss of water decreases fire resistance and increases viscosity. Excessive water content significantly decreases viscosity.

The viscosity and lubrication of HFB fluids are similar to those of petroleum-base hydraulic fluids; however, they are generally non-Newtonian and have high vapor pressures. These characteristics make pump inlet conditions critical. A common system design is to place the reservoir above the pump so that a positive fluid head is provided. This is often termed a "flooded suction" arrangement.

3. *Water-Glycol Fluids (HFC)*. These fluids are usually about 50% water and 50% alcohol—usually polyethylene glycol. They normally have an operating range of –20 to 60°C (–4 to 140°F) but formulations may be used to –40°C (–40°F). The viscosity characteristics of these fluids are similar to those of petroleum-base fluids. Both their viscosity and their fire resistance vary with water content, so this must be closely maintained. HFC fluids are incompatible with most paints as well as zinc- and cadmium-containing materials.

4. *Synthetic Fluids (HFD)*. HFD fluids are generally termed synthetics, although they may be a mixture of synthetic and petroleum fluids. The most common HFDs are phosphate esters and synthetic hydrocarbons. The service temperature range for many of these fluids is generally –20 to 150°C (–4 to 302°F), although the phosphate fluids are generally less stable than synthetic hydrocarbons and cannot be used at the higher temperatures. These fluids gain their fire resistance from their chemical structure rather than from water content as in the other categories. The characteristics of the HFD fluids vary widely, depending on their formulation.

None of these fluid categories should be considered nonflammable; they will all burn under certain conditions.

3-2.7.6 Nonflammable Hydraulic Fluids

In order to eliminate the losses in military vehicles caused by both combat- and noncombat-related hydraulic system fires, efforts are continuing in the development of a nonflammable hydraulic fluid. In a continuing research effort managed by the Air Force Wright Laboratory Materials Directorate, a fluid has been developed whose fire resistance is so far superior to the commonly used fluids that it has been termed nonflammable (Ref. 64). The fluid has been determined to be nonflammable to any anticipated ignition threat aboard an aircraft including rejected takeoff with hot carbon brakes.

This fluid contains saturated, low molecular weight polymers of chlorotrifluoroethylene (CTFE), and it is termed a

Downloaded from http://www.everyspec.com

CTFE fluid. The chemical and physical properties of CTFE are very different from those of petroleum-base hydraulic fluids. The primary differences include high specific gravity, slightly higher volatility, incompatibility with nitrile seals, slightly lower bulk modulus, and slightly lower additive solubility. Table 3-4 compares the fire resistance of CTFE to that of other common hydraulic fluids. This fluid is discussed in greater detail in Chapter 4.

3-2.8 VOLATILITY

All liquids tend to vaporize when they are heated. The volatility of a liquid describes the degree to which and the rate at which it will vaporize under given conditions of temperature and pressure. It is desirable that a hydraulic fluid have low volatility. Vaporization of a liquid in service can result in pump damage through cavitation and a reduction in efficiency. There are three characteristics generally used to indicate the volatility characteristics of a liquid: vapor pressure, boiling point, and evaporation loss. All three are different aspects of the volatility of a liquid.

3-2.8.1 Vapor Pressure

The pressure exerted by a vapor that is in equilibrium with the liquid is known as vapor pressure. For a given liquid this pressure is a function only of temperature. The more volatile the liquid, the higher the vapor pressure at a specified temperature and the faster the vaporization.

The vapor pressure for a pure liquid is a physical property of the liquid for a given temperature. Most hydraulic fluids, however, are mixtures of several components. The vapor pressure of the mixture is a composite value that reflects the combined effects of the individual components. Theoretically, the vapor pressure of the mixture can be calculated from knowledge of the vapor pressures of the individual components and their mole fractions.

Numerous methods have been developed to determine the vapor pressure of pure fluids. The use of these methods to determine the vapor pressure of mixtures, such as hydraulic fluids, can introduce errors, and it is difficult to obtain accurate vapor pressure data. When the vapor pressure is presented, it is frequently the vapor pressure of the base liquid. A graph of vapor pressure vs temperature for some of the more common types of hydraulic fluids is shown in Fig. 3-35. In a homologous series of liquids, the vapor pressures of the individual liquids vary inversely with their molecular weights.

ASTM D 2878 (Ref. 66) contains a method that can be used to estimate the vapor pressure of petroleum-base and synthetic ester lubricating oils. This method involves heating the oil sample to a predetermined temperature and holding it at that temperature until 5 ± 1% of the fluid has evaporated. The evaporation rate is then compared with a standard value for pure m-terphenyl to determine the apparent vapor pressure.

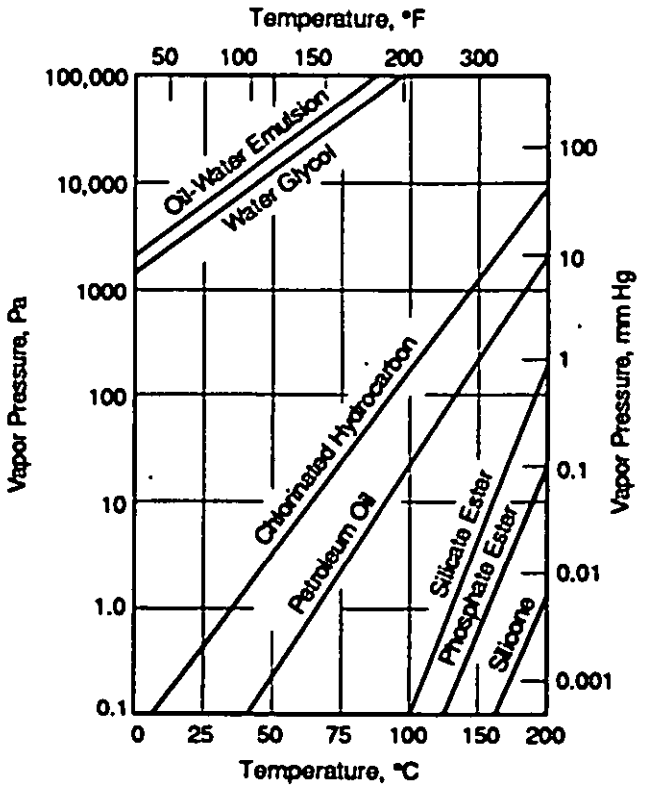

Reprinted from *Fluid Power Design Handbook*, p. 5, by courtesy of Marcel Dekker, Inc.

Figure 3-35. Vapor Pressure vs Temperature of Typical Fluids (Ref. 65)

The isoteniscope method used to determine vapor pressure is detailed in ASTM D 2879 (Ref. 67). In this method dissolved and entrained gases are removed from the fluid sample in the isoteniscope, shown in Fig. 3-36, by heating a thin film of the sample at a reduced pressure. The vapor pressure of the fluid at the selected temperature is determined by balancing the pressure caused by the vapor of the sample against a known pressure of an inert gas. The U-shaped section at the bottom of the isoteniscope is used to determine when these pressures are equal.

The vapor pressure of hydraulic fluids and other low-volatility liquids is usually expressed in pascals (millimeters of mercury). The vapor pressure of more volatile products, such as gasoline and solvents, is often expressed as the Reid vapor pressure. The Reid vapor pressure is the vapor pressure at 37.8°C (100°F) in kilopascals (pounds per square inch) absolute. The method of measuring the Reid vapor pressure of a liquid is described in ASTM D 323 (Ref. 68) and Federal Test Method 1201 (Ref. 69). It is determined by placing a sample of the fuel (chilled to 0 to 1°C (32 to 34°F)) in a sealed bomb with air at ambient pressure and temperature at 37.8 ± 0.1°C (100 ± 0.18°F) and then measuring the change of pressure in the bomb. The Reid vapor

Downloaded from http://www.everyspec.com

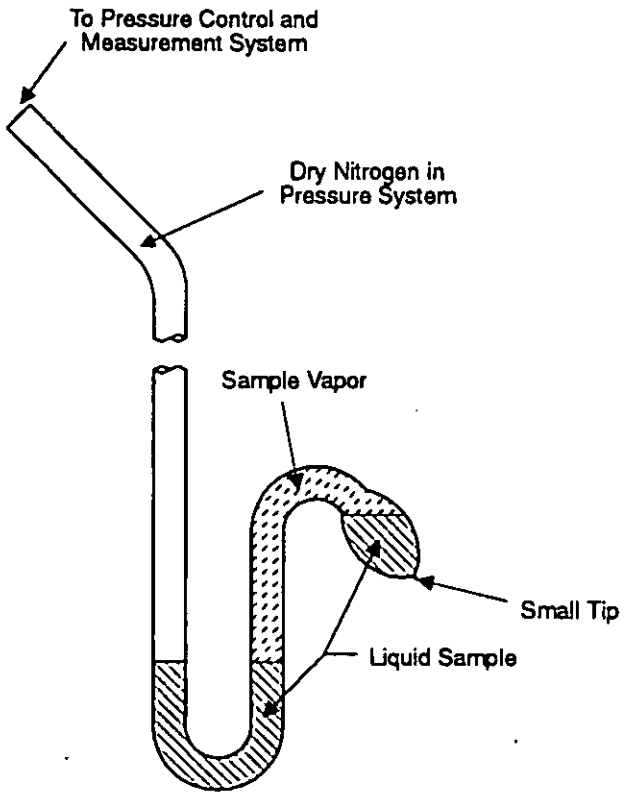

Copyright ASTM. Reprinted with permission.

Figure 3-36. Isoteniscope (Ref. 67)

pressure is a standard measure of volatility in the fuels and solvents industry.

3-2.8.2 Boiling Point

The boiling point becomes important only for relatively pure compounds and is not generally used to describe liquids that are mixtures. It is determined by extrapolation of vapor pressure data or by simply heating a liquid until it refluxes, or distills. For liquids that are mixtures a range of boiling points is obtained rather than a single boiling point. The boiling point temperature range of petroleum products is normally determined by ASTM D 86 (Ref. 70). A 100-mL sample of the product is distilled in a prescribed manner, which depends upon its nature. The temperature readings taken are the initial boiling temperature of the sample, the maximum boiling temperature, and other temperatures as prescribed percentages of the distilled product are recovered in a condensing unit.

A second method used to determine the boiling point for petroleum products is given in ASTM D 2887 (Ref. 71). In this method a sample of the test liquid is introduced into a gas chromatographic column that separates hydrocarbons in the order of increased boiling point. The temperature in the column is slowly increased. As the liquid vaporizes, the area under the chromatogram is recorded. Boiling points are assigned to the time axis from a calibration curve. The boiling range distribution can be obtained from the data from the chromatogram.

Boiling of a hydraulic fluid in a system can result in system failure or component damage. Formation of vapor in control lines, actuators, servomotors, and other components adversely affects the operation of those components. Boiling on the suction side of the pump reduces the pump delivery and causes cavitation in the pump.

3-2.8.3 Evaporation

Evaporation loss is widely used in the United States to describe the volatility of liquid products such as hydraulic fluids, lubricants, and greases. The actual evaporation rate is not an overly important factor in closed-loop hydraulic systems that are not exposed to the atmosphere, but it can be important in systems with reservoirs vented to the atmosphere. Several tests used to determine evaporation loss have been developed and adopted as ASTM or Federal Test Methods. Most of these tests are essentially the same in that they consist of heating a sample of the liquid in the presence of air and observing the results. They differ in their procedure, apparatus, and method of reporting results. A discussion of several tests follows:

1. *Evaporation (Tackiness Test)*

   Test Method. Federal Test Method 353 (Ref. 72)

   This test method is intended for hydraulic fluids that contain viscosity improvers, such as acryloid polymers. It enables determination of the tackiness of the viscosity improver after the base liquid has been evaporated. This method is most commonly applied as a quality control test rather than as an attempt to measure potential behavior in a system.

   A glass slide is dipped in a sample of the fluid at room temperature and then suspended in an oven. The oven is heated to the test temperature for the period of time required by the fluid specification. The condition of the fluid on the slide is reported. A fluid is considered to have passed the test if it is still oily and not hard or tacky.

2. *Evaporation Loss*

   Test Methods. Federal Test Method 351 (Ref. 73)
   ASTM D 972 (Ref. 74)

   These methods describe a test procedure used to determine the evaporation loss of lubricating greases and oils at any temperature in the range of 99 to 149°C (210 to 300°F).

   A sample of the fluid is placed in a special container, shown in Fig. 3-37, in a bath maintained at the test temperature. Heated air is passed over the surface of the fluid for 22 h. The evaporation loss is expressed in percent weight loss of the sample.

   Precision.

   a. Repeatability. 2.5% of the mean
   b. Reproducibility. 10% of the mean.

Downloaded from http://www.everyspec.com

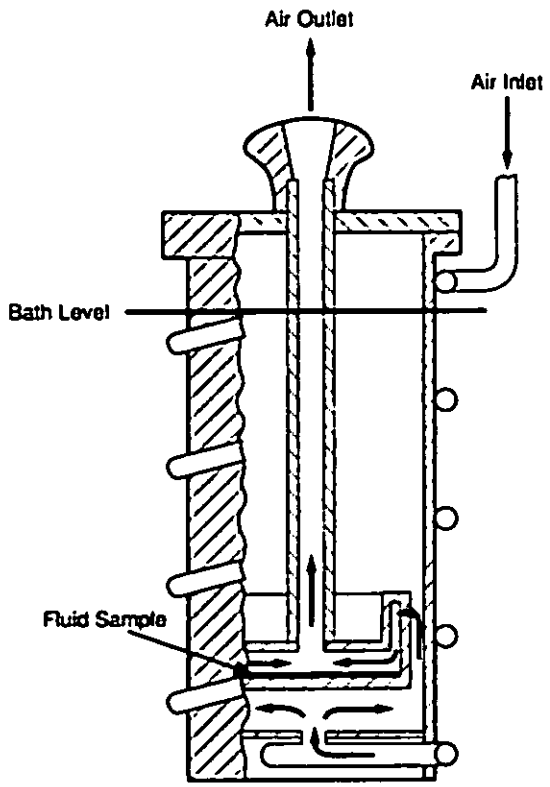

Figure 3-37. Evaporation Loss Test Apparatus

3. *Evaporation Loss—High Temperature*
Test Method. Federal Test Method 350 (Ref. 75)

This method is the same as that used to determine evaporation loss in Item (2) except for the temperatures for the test and the apparatus. Evaporation loss data can be obtained at any temperature in the range of 99 to 538°C (210 to 1000°F).

The results obtained from this procedure can be misleading due to oxidation of the test sample at the higher test temperatures. Oxidation of the fluid can lead to erroneous predictions regarding the potential evaporation characteristics of the fluid.

3-2.9 DENSITY, SPECIFIC GRAVITY, AND THERMAL EXPANSION

Liquids expand in volume, with a corresponding decrease in density, when heated. The amount of expansion varies with each liquid and is a basic property of that liquid. The density and the coefficient of cubical expansion are closely related because the coefficient of cubical expansion defines the change in volume (and therefore the change in the density) that occurs with a change in temperature.

3-2.9.1 Density

Density is defined as the mass of a unit volume of material at any given temperature and pressure. It is expressed in units of kilograms per cubic meter (slugs per cubic foot).

Density is very important when calculating flow of hydraulic fluids through components such as valves, pumps, and motors. Density enters into the flow-energy equations and changes in density will affect the results obtained from these equations.

Density is a function of both temperature and pressure. An increase in temperature produces a decrease in density. Changes in density due to expansion of fluids between the minimum and maximum system temperature can cause serious malfunctions unless considered during the design of a system. For a high-temperature aircraft or missile hydraulic system operating between the extreme temperatures of –54 to 260°C (–65 and 500°F), the fluid volume can be expected to change up to 35%. Graphs of density vs temperature for several types of fluids are shown in Fig. 3-38.

Density also varies with pressure. An increase in pressure produces an increase in density. However, the normal pressures encountered in most hydraulic systems are not high enough to produce significant changes in density. Pressures as high as 34,474 kPa (5000 psi), which is higher than the pressures normally encountered in hydraulic systems, produce changes of less than 2.5% in the density of the MIL-H-5606 fluid. As pressures increase to very high levels, large and significant changes in density occur. The ASME *Pressure-Viscosity Report* (Ref. 18) gives density data on several liquids at pressures up to 1034 MPa (150,000 psi). The report indicates that changes in density up to 35% are produced at these higher pressures.

Researchers at Rock Island Arsenal have conducted extensive studies of the effect of hydraulic fluid density on the performance of artillery recoil mechanisms (Refs. 76 and 77). They determined that using a liquid of higher den-

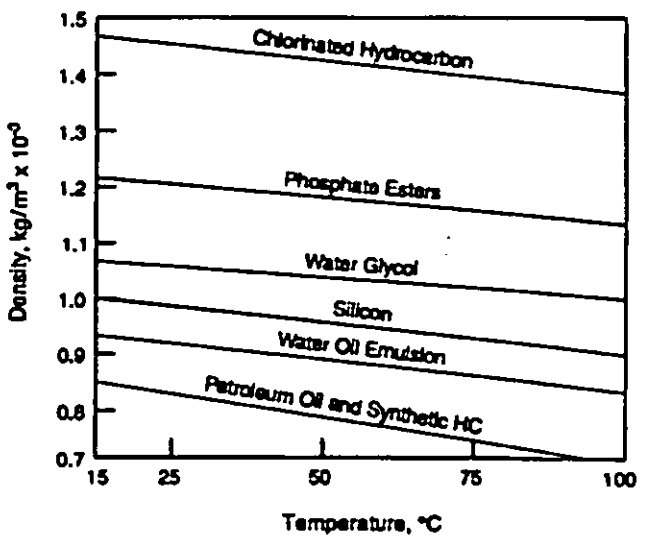

Reprinted from *Fluid Power Design Handbook*, p. 5, by courtesy of Marcel Dekker, Inc.

Figure 3-38. Densities of Typical Fluids (Ref. 65)

Downloaded from http://www.everyspec.com

sity results in shorter recoil lengths and higher pressures. Shorter recoil length may be of value in recoil systems operating in confined areas such as combat vehicles, but consideration must be given to the higher pressures involved. This can be controlled by hardware adjustments.

This problem of high pressure was encountered in the evaluation of CTFE, which has a density almost twice that of common hydraulic oils, in the recoil mechanism for the 105-mm gun on the M1 Abrams Tank (Ref. 78). The overpressure problem was solved on an M140A1 gun mount by modifying the recoil mechanism to provide deeper grooves in the recoil piston (Ref. 79).

3-2.9.2 Specific Gravity

The specific gravity Sg of a liquid is defined as the ratio of its density to the density of water at 4°C (39°F). It is expressed mathematically as

$$Sg = \frac{\rho_s}{\rho_w}, \text{ dimensionless} \qquad (3\text{-}22)$$

where

ρ_s = density of the subject fluid, kg/m^3 (slug/ft^3)
ρ_w = density of water at 4°C (39°F) = 1000 kg/m^3 (1.94 slug/ft^3).

Specific gravity can also be related to the specific weight of the fluid by

$$Sg = \frac{\gamma_s}{\gamma_w}, \text{ dimensionless} \qquad (3\text{-}23)$$

where

γ_s = specific weight of the subject fluid, kN/m^3 (lb/ft^3)
γ_w = specific weight of water at 4°C (39°F) = 9.80 kN/m^3 (62.4 lb/ft^3).

Specific gravity is very useful in the commercial aspect of the petroleum industry. Almost all liquid petroleum products are packed by volume—barrels, gallons. They are, however, frequently shipped or sold on a weight basis. Specific gravity provides a convenient conversion factor. It is also useful in determining fuel loads, determining combustion efficiencies, and in other processes that depend on specific gravities of the materials used.

3-2.9.3 API Gravity

Several methods have been developed to express the weight-volume relationship of a liquid as a whole number. One such method is the American Petroleum Institute (API) Gravity Scale. The scale is based on specific gravity at 15.6°C (60°F) and reports specific gravity as API degrees from 0 to 100. The API scale is an arbitrary scale with 0 corresponding to a specific gravity of 1.076 and 100 corresponding to a specific gravity of 0.6762. Therefore, the higher the API gravity, the lower the specific gravity of a liquid and the less dense the liquid. API gravity is related to specific gravity by

$$\text{API gravity (degrees)} = \frac{141.5}{Sg\ 60/60°\text{F}} - 131.5 \qquad (3\text{-}24)$$

where the term "Sg 60/60°F" means that the specific gravity value used in the denominator is the ratio of the mass of a given volume of the liquid sample at 15.6°C (60°F) to the mass of an equal volume of pure water at the same temperature. For example, water with a specific gravity of 1.000, 60/60°F, has an API gravity of 10.0.

3-2.9.4 Coefficient of Thermal Expansion

The coefficient of thermal expansion (formerly called the coefficient of cubical expansion) expresses the change in volume per unit volume with temperature. It has the units of vol/(vol·temperature). Thermal expansion is always accompanied by a change in density and specific gravity, and the coefficient of expansion is usually calculated from density (or specific gravity) data determined at various temperatures. It is an average value over the actual temperature range of determination and is not necessarily a linear function. The temperature range in which the measurements are made should be stated in all data. Graphs of thermal expansion vs temperature for three hydraulic fluids are shown in Fig. 3-39.

3-2.9.5 Test Methods for API Gravity, Density, and Specific Gravity

Discussions of test methods for API gravity, density, and specific gravity follow:

1. *API Gravity*

Test Methods. Federal Test Method 401 (Ref. 80)
ASTM D 287 (Ref. 81)

These methods describe a procedure used to determine, by means of a glass hydrometer, the API gravity of petroleum products normally handled as liquids and having a Reid vapor pressure of 179 kPa (26 psi) or less.

A sample of the fluid is brought to the proper test temperature and placed in a glass cylinder. An API hydrometer is floated in the fluid and the API gravity in degrees is read from the hydrometer. The temperature of the sample is noted. All readings are corrected to API gravity at 15.6°C (60°F) from standard tables published jointly by ASTM and the Institute of Petroleum (Ref. 82).

Precision. The criteria that should be followed to judge the results obtained at temperatures of 15.6 ± 10°C (60 ± 18°F) are that the results should not be considered

Downloaded from http://www.everyspec.com

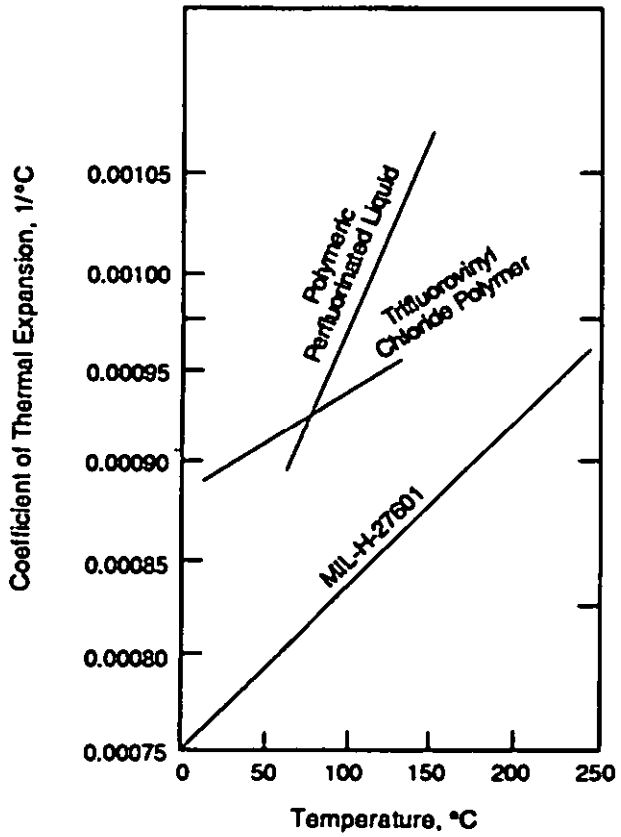

Figure 3-39. Coefficient of Thermal Expansion vs Temperature of Several Types of Hydraulic Fluids

suspect unless they differ by more than the following amounts:

a. Repeatability. 0.2° API
b. Reproducibility. 0.5° API

2. *Density and Specific Gravity—Lipkin Bicapillary Pycnometer*

Test Methods. Federal Test Method 402 (Ref. 83)
ASTM D 941 (Ref. 84)

These methods describe the procedure used to measure the density of hydrocarbon materials that can normally be handled as liquids at the specified test temperatures of 20 and 25°C (68 and 77°F). Application is restricted to liquids having vapor pressures less than 80 kPa (11.5 psi) and viscosities less than 15-20 mm^2/s at 20°C (68°F). Two procedures are provided. Procedure A for pure compounds and mixtures that are not highly volatile and Procedure B for highly volatile mixtures. These test methods also provide a calculation procedure for converting density to specific gravity.

A sample of the liquid is drawn into the bicapillary pycnometer, shown in Fig. 3-40, and weighed. The pycnometer is then placed in a bath at the specified temperature and allowed to come to equilibrium. The height of the fluid in

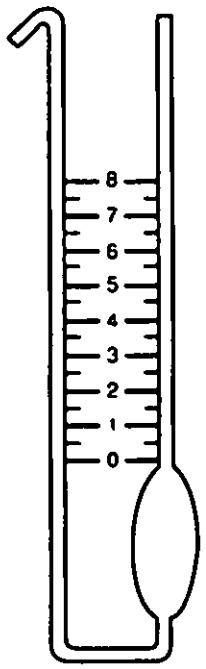

Figure 3-40. Lipkin Bicapillary Pycnometer Used to Determine Density and Specific Gravity of Liquids

each arm is noted and the volume is determined from the pycnometer calibration. The density and the specific gravity are then calculated from the weight and volume of the fluid sample.

Precision. Results should not be considered suspect unless they differ by more than the following amounts:

a. Repeatability. 0.0001 g/mL
b. Reproducibility. 0.0002 g/mL

3. *Density and Specific Gravity—Bingham Pycnometer*

Test Method. ASTM D 1217 (Ref. 85)

This method describes the procedure used to determine the density of pure hydrocarbons or petroleum distillates that boil between 90 and 110°C (194 and 230°F) that can be handled normally as liquids at 20 and 25°C (68 and 77°F). Also provided is a calculation procedure for conversion of density to specific gravity.

The fluid sample is introduced into the pycnometer, shown in Fig. 3-41, allowed to come to equilibrium at the test temperature, and weighed. The specific gravity or density is then calculated from this weight and the previously determined weight of water that is required to fill the pycnometer at the same temperature.

Precision. Results with the 25-mL Bingham pycnometer should not differ by more than the following amounts:

a. Repeatability. 0.00002 g/mL
b. Reproducibility. 0.00003 g/mL

Downloaded from http://www.everyspec.com

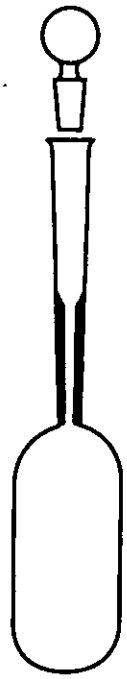

Figure 3-41. Bingham Pycnometer Used to Determine Density and Specific Gravity of Liquids

4. *Specific Gravity—Hydrometer Method*

Test Method. ASTM D 1298 (Ref. 86)

This method describes a procedure for determining by means of a glass hydrometer, the specific gravity of crude petroleum and petroleum products normally handled as liquids and having a Reid vapor pressure of 179 kPa (26 psi) or less. Results are determined at 15.6°C (60°F) or converted to values at 15.6°C (60°F) by means of standard tables published jointly by ASTM and the Institute of Petroleum (Ref. 82).

The sample is poured under prescribed conditions into a clean hydrometer cylinder. The hydrometer is lowered into the sample so that it is floating freely away from the walls of the cylinder. The observed gravity is read directly on the hydrometer scale at the point at which the surface of the sample intersects the scale. The temperature of the sample is also measured.

Precision. The repeatability and reproducibility of this test method depend upon the type of fluid and the test temperature. A table is provided in ASTM D 1298 that defines the precision of the test based on these parameters.

3-2.10 HEAT TRANSFER CHARACTERISTICS

The heat transfer properties of a hydraulic fluid can be very important to the design engineer because most hydraulic systems are thermally inefficient. A large portion of the pressure energy supplied to the hydraulic fluid through the pump is dissipated by friction in the valves, motors, actuators, seals, piping, and other components of the system. All of this dissipated energy becomes heat energy and much of it raises the liquid temperature. A knowledge of the heat transfer characteristics of the liquid is essential to the determination of how high the temperature will rise, and what type and size of heat exchanger will be needed to maintain the liquid at a desirable temperature.

Equations used to calculate the rates of heat generation and temperature rise, as well as the heat dissipation capability of reservoirs and heat exchangers, are presented and discussed in par. 2-10.

3-2.10.1 Specific Heat

The specific heat of a liquid is a measure of the amount of heat a given quantity of liquid can absorb from the system. It is defined as the heat required to raise a unit mass of liquid one degree of temperature. The specific heat is usually denoted by the symbol c_p or c_v and its units in the SI are J/(kg·K) and in the English system are Btu/(lbm·°F). The subscripts p and v indicate whether the determination of specific heat is made at constant pressure or at constant volume. This distinction becomes important in gases, which are highly compressible, but liquids are relatively incompressible by comparison, and there is little difference between the two values. In general, however, it is common practice to determine the specific heat of liquids at constant pressure and to use the symbol c_p.

For a given hydraulic system supplying a given amount of heat to the hydraulic fluid, a liquid with a high specific heat will undergo a smaller temperature rise than will a liquid with a low specific heat. Thus a high value aids in maintaining a lower operating temperature in a system, and in some applications increases the amount of heat that may be removed from a system hot spot without causing degradation of the liquid.

The specific heat increases with temperature for most hydraulic fluids, and the temperature should always be stated with the data. A graph of specific heat vs temperature for several hydraulic fluids is shown in Fig. 3-42. Although specific heat varies with pressure, the change is so small over the pressure ranges normally encountered in hydraulic systems that it is neglected.

Numerous methods have been developed to measure the specific heat (Ref. 4). Almost all of these methods use some type of calorimeter (essentially an insulated flask). A known volume of the sample is placed into the flask and a known amount of heat is added to the sample. The change in temperature of the sample and the amount of heat added are both recorded. The specific heat is then calculated and corrections are made for heat losses from the calorimeter. An approximation of the specific heat c_p of petroleum liquids is given by (Ref. 87)

Downloaded from http://www.everyspec.com

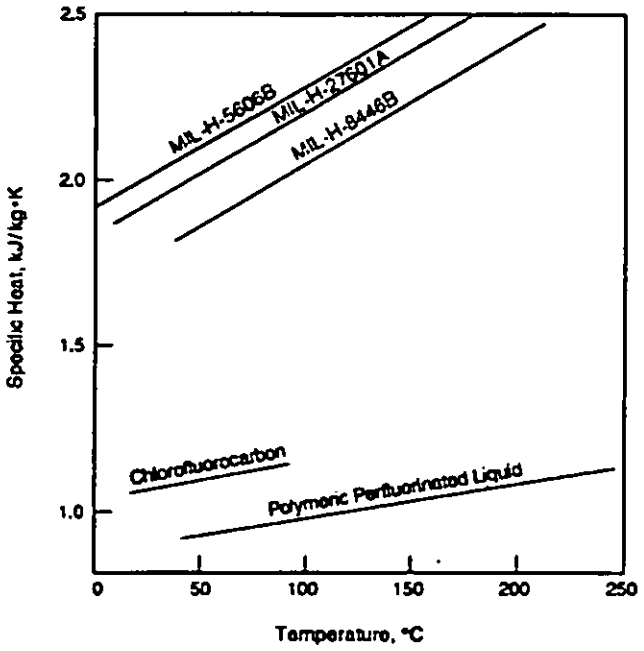

Figure 3-42. Specific Heat vs Temperature of Several Types of Hydraulic Fluids

$$c_p = \frac{4.187}{\sqrt{Sg}}(0.402 + 0.00081 t_c)\ ,\ \text{kJ/kg·°C} \tag{3-25}$$

where

Sg = specific gravity, dimensionless
t_c = temperature, °C.

In the English system this equation becomes

$$c_p = \frac{1}{\sqrt{Sg}}(0.388 + 0.00045 t_f)\ ,\ \text{Btu/(lbm·°F)} \tag{3-26}$$

where

t_f = temperature, °F.

3-2.10.2 Thermal Conductivity

Thermal conductivity is one measure of the ability of a material to transfer heat. Heat transfer in operating hydraulic systems is accomplished primarily by convection because of forced liquid mixing. However, thermal conductivity is important in the transfer of heat to or from the physical boundaries of hydraulic systems. A liquid having a high thermal conductivity will more readily pick up heat in hot system components, such as valves and pumps, and transfer it to cooler system components, such as heat exchangers. Liquids commonly used in hydraulic systems generally have thermal conductivities at room temperature on the order of 0.10 to 0.208 W/(m·K) (0.0002 to 0.0004 Btu·in./(s·ft^2·°F)), and these values normally decrease appreciably with temperature increases. A graph of thermal conductivity of several hydraulic fluids is shown in Fig. 3-43.

Several methods of measuring thermal conductivity have been developed (Ref. 4). Most of these methods consist of placing the sample fluid between two surfaces of known area and heating one surface to a known temperature. The temperature of the other surface and the rate of heat transfer are observed. The thermal conductivity is then calculated.

3-2.11 COMPRESSIBILITY AND BULK MODULUS

3-2.11.1 Compressibility

Although most liquids are thought of as incompressible, in general, all liquids are compressible to some extent. Compressibility of a liquid causes the liquid to act much like a stiff spring. This spring-like action can produce delays in control signals, use energy to compress the fluid, and affect the gain or amplification of servo systems (Ref. 88). It is usually desirable to have the hydraulic fluid as stiff as possible, i.e., to have the compressibility as small as possible. The use of hydraulic fluid in shock absorbers is one important exception.

The coefficient of compressibility is the fractional change in a unit volume of liquid per unit change of pressure. If the compression process is carried out slowly so that sufficient heat is removed to maintain a constant temperature, the resultant value of compressibility is the isothermal compressibility C_t given by (Ref. 4)

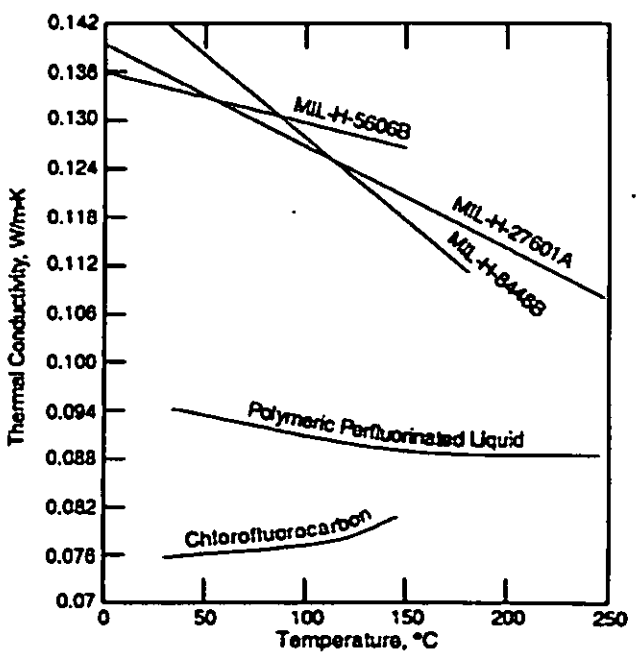

Figure 3-43. Thermal Conductivity vs Temperature of Several Types of Hydraulic Fluids

Downloaded from http://www.everyspec.com

$$C_t = \frac{1}{V_0}\left(\frac{\delta V}{\delta p}\right)_t, \ (\text{kPa})^{-1}\left(\frac{\text{ft}^2}{\text{lb}}\right) \qquad (3\text{-}27)$$

where

V_0 = initial volume, m^3 (ft^3)

$(\delta V/\delta p)_t$ = rate of change of volume with pressure at constant temperature, m^3/kPa (ft^3/(lb/ft^2)).

If the compression takes place under conditions that extract no heat, the process is termed adiabatic, or isentropic. Under these conditions the result is the isentropic compressibility C_s given by (Ref. 4)

$$C_s = \frac{1}{V_0}\left(\frac{\delta V}{\delta p}\right)_s, \ (\text{kPa})^{-1}\left(\frac{\text{ft}^2}{\text{lb}}\right) \qquad (3\text{-}28)$$

where

V_0 = initial volume, m^3 (ft^3)

$(\delta V/\delta p)_s$ = rate of change of volume with pressure at constant entropy m^3/kPa (ft^3/(lb ft^2)).

Compressibility has the units of volume/(volume·pressure). It is common practice to cancel out the volume terms and express compressibility as pressure^{-1}. A graph of percent volume compression vs pressure of several liquids is shown in Fig. 3-44.

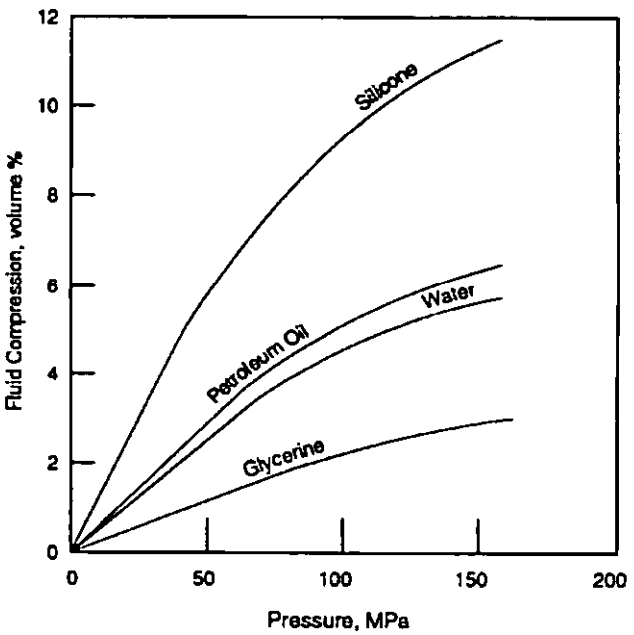

Reprinted from *Fluid Power Design Handbook*, p. 5, by courtesy of Marcel Dekker, Inc.

Figure 3-44. Fluid Percent Volume Compression vs Pressure of Typical Fluids (Ref. 65)

Differences exist between the isothermal and the isentropic compressibility. For normal situations encountered in hydraulic systems, they are not sufficient to warrant differentiation. However, at high temperatures or pressures or for certain liquids, the differences can become significant, and when they are added to the wide variations caused by temperature and pressure, a system can be driven beyond acceptable stability limits. (Ref. 89)

3-2.11.2 Bulk Modulus

Bulk modulus, the reciprocal of compressibility, is used in design calculations for hydraulic systems. The units of bulk modulus are kPa (lb/in.^{2}). The higher the bulk modulus, the less elastic, or the stiffer, the liquid. High bulk modulus values are usually desirable since the result is a more stable and less elastic system.

Like compressibility, bulk modulus can be either isothermal or adiabatic. The isothermal bulk modulus is sometimes referred to as the static bulk modulus because it is determined at a constant temperature. The isentropic or adiabatic bulk modulus is sometimes referred to as the dynamic bulk modulus. In either case, static or dynamic, bulk modulus may be reported as the secant or the tangent modulus. The names "secant" and "tangent" refer to the relationship the values have to the pressure-volume curve of the liquid. (See pars. 3-2.11.2.1 and 3-2.11.2.2.) There are then four bulk modulus values possible—isothermal secant, adiabatic (isentropic) secant, isothermal tangent, and adiabatic (isentropic) tangent—and care must be exercised to select the right value for a particular application.

3-2.11.2.1 Secant Bulk Modulus

The secant bulk modulus (frequently referred to in the literature as the mean or average modulus) is defined as the total change in liquid pressure divided by the total change in volume per unit volume of liquid. The secant modulus then is the slope of the secant (drawn between two pressures) of the pressure-volume curve as shown in Fig. 3-45. It is standard practice to set the initial pressure equal to atmospheric. The secant modulus of a liquid can be thought of as the average pressure required to produce a given volume change per unit volume over a given pressure range. A discussion of the two secant bulk moduli follows:

1. *Isothermal Secant Bulk Modulus.* The isothermal secant bulk modulus B_{t} is the bulk modulus determined when the liquid is held at constant temperature. It is the modulus value applied to systems that change pressure and volume very slowly, allowing heat to flow in or out to maintain a constant temperature. This is the value of bulk modulus most often reported for hydraulic fluids. It can be easily determined with relatively simple equipment. Its defining equation is

Downloaded from http://www.everyspec.com

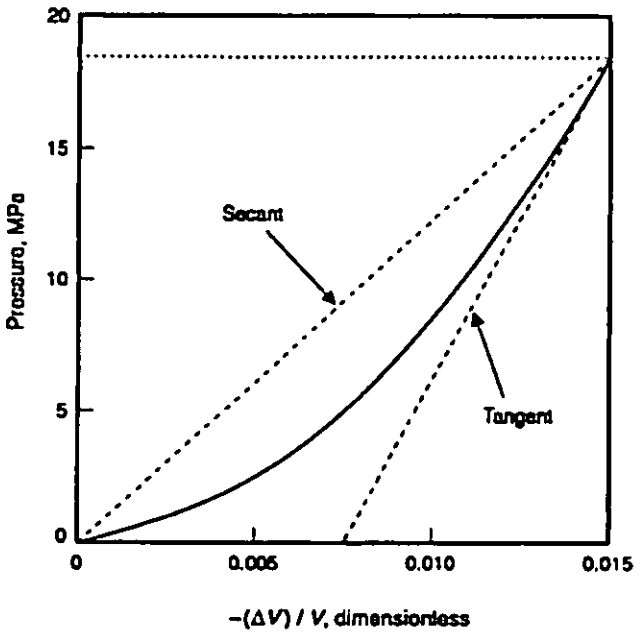

Figure 3-45. Example Representation of Secant and Tangent Bulk Moduli

$$B_{st} = -V_0\left(\frac{\Delta p}{\Delta V}\right)_t, \text{kPa}\left(\frac{\text{lb}}{\text{ft}^2}\right) \qquad (3\text{-}29)$$

where

B_{st} = isothermal secant bulk modulus at pressure p and temperature t, kPa (lb/ft^2)
V_0 = initial volume, m^3 (ft^3)
Δp = change in pressure, kPa (lb/ft^2)
ΔV = change in volume, m^3 (ft^3)
Subscript t = change in pressure and volume measured at a constant temperature.

2. *Adiabatic (Isentropic) Secant Bulk Modulus.* The adiabatic, or isentropic, secant bulk modulus B_{ss} is defined by

$$B_{ss} = -V_0\left(\frac{\Delta p}{\Delta V}\right)_s, \text{kPa}\left(\frac{\text{lb}}{\text{ft}^2}\right) \qquad (3\text{-}30)$$

where

Subscript s = change in pressure and volume measured at a constant entrophy.

As shown in Fig. 3-45, the isentropic and isothermal secant bulk moduli are defined by the same secant line. The difference is that the data for the isentropic modulus are acquired under adiabatic conditions.

3-2.11.2.2 Tangent Bulk Modulus

The tangent bulk modulus is defined as the product of the derivative of liquid pressure with respect to volume and the volume under compression. In Fig. 3-45 the tangent bulk modulus is the slope of the tangent drawn at a given point. It is not an average value over a range of pressures like the secant but represents the bulk modulus at a specific temperature and pressure. A discussion of the two tangent bulk moduli follows:

1. *Isothermal Tangent Bulk Modulus.* The isothermal tangent bulk modulus B_{tt} is the tangent bulk modulus determined when the fluid is held at a constant temperature. Its defining equation is

$$B_{tt} = -V_0\left(\frac{\partial p}{\partial V}\right)_t, \text{kPa}\left(\frac{\text{lb}}{\text{ft}^2}\right). \qquad (3\text{-}31)$$

2. *Adiabatic (Isentropic) Tangent Bulk Modulus.* The isentropic or adiabatic tangent bulk modulus B_{st} is defined by an equation similar to the isothermal case except that the total derivative is used. The difference between the isothermal and isentropic tangent bulk moduli is that the data for the isentropic modulus must be acquired under adiabatic conditions rather than under constant temperature conditions. The defining equation is

$$B_{st} = -V_0\left(\frac{dp}{dV}\right)_s, \text{kPa}\left(\frac{\text{lb}}{\text{ft}^2}\right). \qquad (3\text{-}32)$$

3-2.11.3 Sonic Bulk Modulus

Most bulk modulus data are determined by the use of mechanical equipment, and the resultant data are the isothermal secant bulk moduli. Many hydraulic mechanisms, however, operate at relatively high speeds and the heat of compression does not dissipate. Therefore, the process is isentropic, not isothermal. One procedure to obtain the isentropic bulk modulus has been by differentiation of the isothermal data. This involves rather complex analytical procedures and is not a simple procedure. However, it has been found that the isentropic tangent bulk modulus can be measured directly with a sonic apparatus. By measuring the speed of sound in the liquid, the isentropic tangent bulk modulus is determined by

$$B_{s0} = c^2\rho, \text{kPa}\left(\frac{\text{lb}}{\text{ft}^2}\right) \qquad (3\text{-}33)$$

where

B_{s0} = sonic bulk modulus, kPa (lb/ft^2)
c = speed of sound in liquid, m/s (ft/s)
ρ = density of liquid, kg/m^3 (slug/ft^3).

Downloaded from http://www.everyspec.com

The speed of sound in the liquid is determined by measuring the time required for a pressure pulse or sound wave to travel through the liquid. This method of determining bulk modulus approaches adiabatic conditions with more accuracy than any other method used, and the very nature of the experimental procedure rules out the existence of an isothermal sonic modulus.

3-2.11.4 Measurement of Bulk Modulus

3-2.11.4.1 Secant and Tangent Bulk Moduli

Secant and tangent bulk moduli are usually determined by obtaining a pressure-volume curve for the liquid. Several experimental methods have been developed.

One method is to compress a known sample of the liquid with a column of mercury. The change in position of the mercury-liquid interface is a measure of the compression of the liquid. Use of capillary tubes of mercury allows easy attainment of high pressures on the order of 6895 to 13,790 kPa (1000 to 2000 psi).

Another method frequently used is to place a sealed container of the test liquid into a pressure chamber, subject the container to pressure from an external liquid, and measure the change in volume of the container. One of the most successful examples of this technique is the Bridgeman method. The liquid is placed in a bellows and compression of the bellows causes movement of an electrical contact along a slide wire. This method has the advantage of yielding a continuous plot of pressure vs volume for the experiment. This method was used to determine fluid compressibility in the ASME *Pressure-Viscosity Report* (Ref. 18) and was also used by Wilson (Ref. 17).

A method commonly used in the petroleum industry is to pressurize a known volume of liquid by forcing additional liquid into the container and measuring the volume of liquid expelled when the pressure is released. This method has the disadvantage that it generates only one datum point per experiment, but it can be done with simple equipment and fairly rapidly.

3-2.11.4.2 Sonic Bulk Modulus

Determinations of sonic bulk moduli are made using ultrasonic speed measurements. Several methods have been developed that determine the speed either directly by measurement of the speed of ultrasonic waves in the fluid or indirectly by determining frequencies that result in interference of the generated wave and the reflected wave from the opposite side of the container. The speed can be calculated from the knowledge of path lengths and signal frequencies.

The ultrasonic bulk modulus methods have some advantages over the pressure-volume methods. They allow rapid measurement of bulk modulus, and they are frequently more accurate because the measured quantities rather than their derivatives are used to calculate the bulk modulus. The sonic methods have a disadvantage in that rather complex equipment is required to measure density and sonic speed in a liquid under pressure. A schematic drawing of a typical apparatus for measurement of bulk moduli by sonic speed is shown in Fig. 3-46.

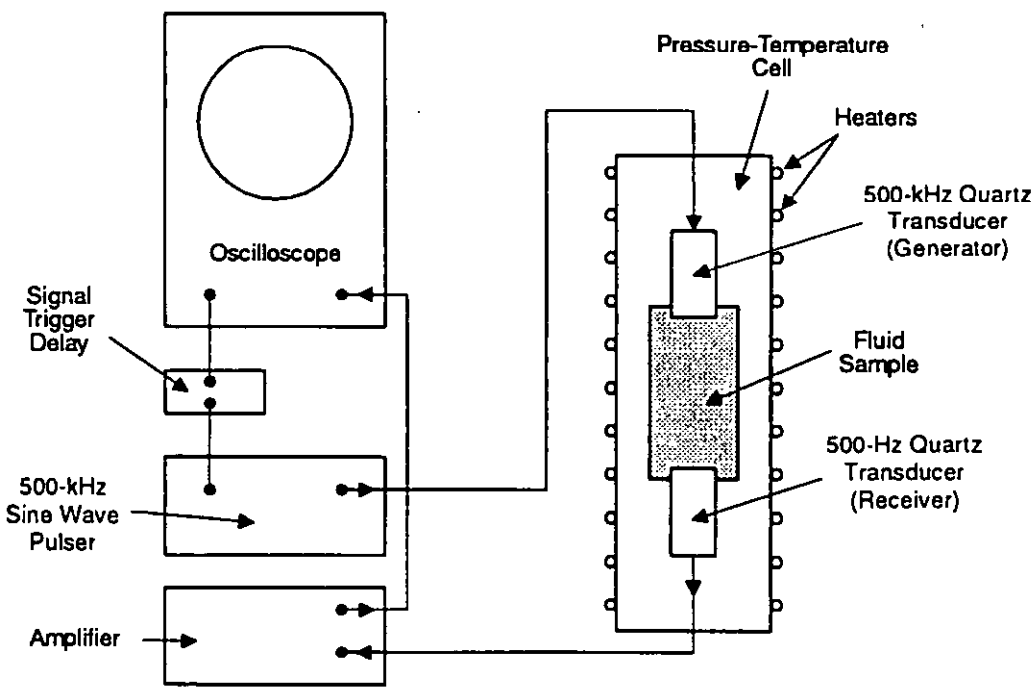

Figure 3-46. Apparatus for Measurement of Adiabatic Bulk Modulus by Sonic Speed (Ref. 89)

Downloaded from http://www.everyspec.com

3-2.11.4.3 Estimation of Bulk Modulus (Penn State Method)

Researchers at the Petroleum Refining Laboratory of Pennsylvania State University have developed a procedure for the measurement and prediction of bulk modulus for fluids (Ref. 19). By studying the pressure-volume-temperature properties of a large number of liquids, they developed a series of empirical equations used to determine the liquid bulk modulus at any temperature or pressure once the bulk modulus is known (with high accuracy) at any one condition of temperature and pressure. Use of their procedure for pressures in the range of 6.895 to 68,950 kPa (1 to 10,000 psi) and temperatures of 0 to 218°C (32 to 425°F) will yield bulk modulus data with an accuracy of ±5%.

3-2.11.4.3.1 Method

A brief outline of the Penn State Method follows:

1. *Bulk Modulus-Pressure Equation*

$$[\bar{B}_{ts} = \bar{B}_0 + 5.30 p_g]_t, \text{ kPa (lb/in.}^2\text{)} \qquad (3\text{-}34)$$

where

$\bar{B}_{ts}$ = isothermal secant bulk modulus at gage pressure p and temperature t, kPa (lb/in.^{2})

$\bar{B}_{0s}$ = isothermal secant bulk modulus at zero gage pressure and temperature t, kPa (lb/in.^{2})

p_g = gage pressure, kPa (lb/in.^{2}).

2. *Bulk Modulus-Temperature Equation*

$$[\log(\bar{B}_{t1s}/\bar{B}_{t2s}) = \beta(t_2 - t_1)]_p, \text{ dimensionless} \qquad (3\text{-}35)$$

where

$\bar{B}_{t1s}$ = isothermal secant bulk modulus at gage pressure p and temperature t_1, kPa (lb/in.^{2})

$\bar{B}_{t2s}$ = isothermal secant bulk modulus at gage pressure p and temperature t_2, kPa (lb/in.^{2})

β = conversion factor obtained from Fig. 3-47, °C^{-1} (°F^{-1}).

3. *Isothermal Tangent-Isothermal Secant Bulk Modulus Relationship*

The isothermal tangent bulk modulus at pressure p is equal to the isothermal secant bulk modulus at $2p$ within 1% error, i.e.,

$$(\bar{B}_{tt})_p = (\bar{B}_{ts})_{2p} \qquad (3\text{-}36)$$

where

$(\bar{B}_{tt})_p$ = isothermal tangent bulk modulus at pressure p, kPa (lb/in.^{2})

$(\bar{B}_{ts})_{2p}$ = isothermal secant bulk modulus at pressure $2p$, kPa (lb/in.^{2}).

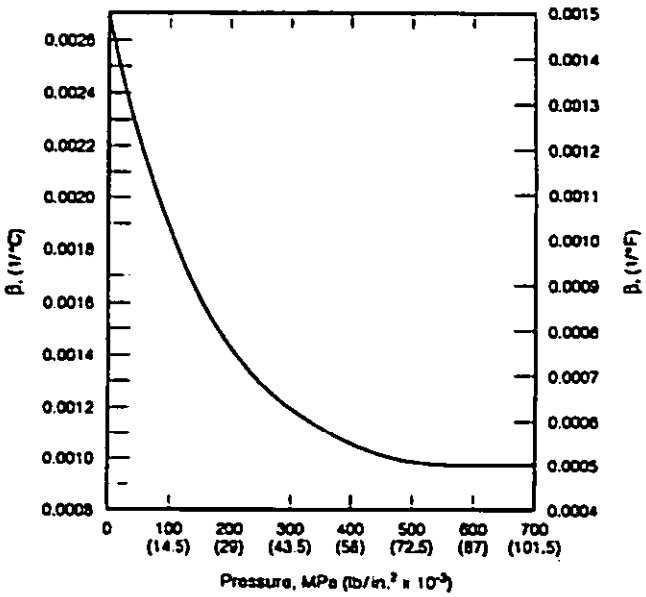

Figure 3-47. Graph of Constant Used in Eq. 3-35 (Ref. 19)

4. *Isothermal Tangent-Isentropic (Adiabatic) Tangent Bulk Modulus Relationship*

$$\frac{B_{st}}{B_{tt}} = \Gamma = \frac{c_p}{c_v} \qquad (3\text{-}37)$$

where

B_{st} = adiabatic (isentropic) tangent bulk modulus, kPa (lb/in.^{2})

B_{tt} = isothermal tangent bulk modulus at pressure p and temperature t, kPa (lb/in.^{2})

Γ = ratio of bulk moduli or ratio of specific heats, dimensionless

c_p = specific heat at constant pressure, kJ/(kg·°C) (Btu/(lbm·°F))

c_v = specific heat at constant volume, kJ/(kg·°C) (Btu/(lbm·°F)).

3-2.11.4.3.2 Example

The example that follows shows how to solve for the isothermal secant bulk modulus ($\bar{B}_{0s}$) at 0 gage pressure and temperature t and for the isothermal secant bulk modulus ($\bar{B}_{ts}$) at gage pressure p and temperature t.

1. Given:

$(\bar{B}_{ts})$ = 1,500,000 kPa (217,557 lb/in.^{2})

t = 40°C (104°F)

p_g = 7000 kPa (1015 lb/in.^{2})

Find: $\bar{B}_{0s}$ at 0 kPa (0 lb/in.^{2}), 40°C (104°F)

Solution:

Solving Eq. 3-34 for $\bar{B}_{0s}$ gives

$$\bar{B}_{0s} = \bar{B}_{ts} - 5.30 p_g, \text{ kPa}$$
$$= [1{,}500{,}000 - 5.30\,(7000)] \text{ kPa}$$
$$= 1{,}462{,}900 \text{ kPa } (212{,}176 \text{ lb/in.}^2)$$

Downloaded from http://www.everyspec.com

2. Given:

$\bar{B}_{0s}$ = 1,462,900 kPa (212,176 lb/in.^{2})

p_g = 70,000 kPa (10,153 lb/in.^{2})

t_1 = 40°C (104°F)

t_2 = 100°C (212°F)

Find: $\bar{B}_{ts2}$

Solution:

Using Eq. 3-34

$$\bar{B}_{ts1} = \bar{B}_{0s} + 5.30 p_g, \text{ kPa}$$
$$= [1{,}462{,}900 + 5.30\,(70{,}000)] \text{ kPa}$$
$$= 1{,}833{,}900 \text{ kPa } (265{,}985 \text{ lb/in.}^2).$$

From Fig. 3-47, $\beta \approx 0.0020$.

Using Eq. 3-35

$$\log(\bar{B}_{t1s}/\bar{B}_{t2s}) = \beta\,(t_2 - t_1)$$
$$\log(1{,}833{,}900/\bar{B}_{t2s}) = 0.0020\,(100 - 40),$$
$$\bar{B}_{t2s} = 1{,}391{,}200 \text{ kPa } (201{,}777 \text{ lb/in.}^2).$$

3-2.11.4.4 Estimation of Bulk Modulus (Other Methods)

Other researchers have also developed relationships for predicting the bulk moduli of liquids. Wright (Ref. 90) has developed a method for determining both the secant and tangent bulk moduli of petroleum oils. The method requires knowledge of only the density of the oil at zero kPa (gage) at a given temperature. By means of a series of graphs, the bulk moduli at any pressure and the given temperatures can be easily determined. Density at an elevated pressure and the given temperature can then be determined by

$$\rho/\rho_0 = 1 - p/\bar{B}_{ts}, \text{ dimensionless} \qquad (3\text{-}38)$$

where

ρ_0 = density at 0 kPa (gage) and temperature t, kg/m^3 (slug/ft^3).

Tichy and Winer (Ref. 91) have developed a method to predict the bulk moduli of silicone liquids similar to Wright's method. Their method also uses a series of graphs to convert density at reference conditions to bulk modulus at any temperature and pressure.

3-2.12 EMULSIONS AND FOAMING IN HYDRAULIC FLUIDS

An emulsion is defined as an intimate dispersion of one liquid within another. It is a mixture of two liquids, not a solution with one liquid dissolved in the other. A foam is an emulsion in which the dispersed phase is a gas rather than a liquid. The foaming and emulsive characteristics of a hydraulic fluid are important to system performance because they are mechanisms by which the fluid can pick up and contain contaminants that can affect its properties and ability to function. The contaminants encountered in hydraulic systems are solid particles, gases, and liquids. Contamination caused by gases can produce foams, and contamination caused by liquids can produce emulsions. This discussion is limited basically to contamination caused by air (gas) and water (liquid).

3-2.12.1 Emulsion Characteristics

An emulsion is unstable and will eventually result in separation of its components. The time required for this separation, however, may vary from several seconds to weeks or months. The separation time of an emulsion formed in a hydraulic fluid is determined by the properties of the fluid and any additives it may contain (See Chapter 5.) and by the contaminant. An emulsion of water and a hydraulic fluid is undesirable. Ease of separation of the water from the hydraulic fluid is essential.

Water forms two types of emulsions with hydraulic fluids: oil in water, in which the water is the continuous phase, and water in oil, in which the oil is the continuous phase. The common type of emulsion that forms in hydraulic fluids contaminated with water is an oil-in-water emulsion. Since water is the continuous phase, there is a drastic decrease in lubricating ability, increased rusting, and a possibility of increased viscosity.

Some fire-resistant hydraulic fluids are formulated as water-in-oil emulsions (HFB). Emulsion stability of these fluids is, of course, required.

Water can enter a hydraulic system in various ways. Leaks in heat exchangers, condensation of moisture in containers or system reservoirs, and accidental contamination are the usual ways. Once the water is in the system, it is subjected to agitation in the pump and other parts of the system where turbulent flow exists. This mixing produces an emulsion of the hydraulic fluid and water. Water, which is mixed with the hydraulic fluid, can cause rusting, a loss of system efficiency, defective lubrication, increased leakage, and increased oxidation of the hydraulic fluid. The emulsion will also affect system performance by forming sticky slimes, which foul pumps, corrode cylinders and other elements of the hydraulic system, and, in general, produce unsatisfactory performance.

To reduce the adverse effects of an oil-and-water emulsion, it is usually desirable to use a hydraulic fluid that has good water separation characteristics. The hydraulic fluid and the water separate quickly in the system reservoir, and the water floats to the top or to the bottom, depending on the density of the hydraulic fluid.

Many materials can function as emulsifying agents and increase the tendency of a hydraulic fluid to form an emulsion. Small concentrations of these materials are usually most effective. Materials that act as emulsifiers can be introduced into a hydraulic system in a number of ways—as impurities in the base stock, as products formed from oxidation during use, and as additives that perform other functions but have emulsifying properties. Thus a hydraulic fluid

Downloaded from http://www.everyspec.com

that normally has good water separation characteristics can be changed while in use in the system to a hydraulic fluid that will readily form emulsions.

It should be pointed out that hydraulic fluids that are emulsions of water-in-oil are being used satisfactorily as fire-resistant hydraulic fluids. In such types of hydraulic fluids it is essential that the oil have good emulsifying properties so the water will not readily separate from it.

3-2.12.2 Foaming Characteristics

A foam is a dispersion of a gas in a liquid. In general, foaming is undesirable in hydraulic systems. The presence of air in a hydraulic fluid can cause a loss of system efficiency, defective lubrication, pump degradation and failure, and loss of fluid by overflow of the foam. Air can be introduced into a hydraulic system in several ways. It can come from leakage on the suction side of the pump, seal leakage, undersized return lines, return lines that terminate above the fluid level, leaking accumulators, and unseparated accumulators. Air can also be introduced while filling the system and installing new components.

Much of the air in a hydraulic system will often be dissolved in the high-pressure liquid at the discharge side of the pump. The air that remains dissolved in the liquid does not create a foam. As the liquid enters low-pressure areas of the system, however, the excess air can come out of solution and form bubbles, which can be carried with the liquid through the system. Foam can also form in any part of the system in which the liquid experiences excessive agitation, such as in gears, bearings, valves, and other components. If the liquid has good foam-suppressing capability, the excess bubbles will be carried to the reservoir and released.

Undissolved air causes irregular action of cylinders and valves because the liquid no longer has a high degree of incompressibility. Air bubbles, when compressed to a high pressure, will produce a localized high temperature. It can be shown that if air is adiabatically compressed from atmospheric pressure to 689 kPa (100 psi), the theoretical temperature of the air would be 250°C (482°F). At a compression of 20,685 kPa (3000 psi), the theoretical temperature would be 1100°C (2012°F). These high temperatures may not be noticeably reflected in a rise in the reservoir temperature but will cause oxidation of the surrounding liquid film and the formation of contaminants.

Foaming characteristics are usually discussed in terms of foaming tendency and foam stability. Foaming tendency is a measure of the ability of a liquid to form a foam under specified conditions that would promote foaming. It is usually desirable to have as little tendency to foam as possible. Foam stability is a measure of the tendency of a liquid to maintain a foam once it has been established. The lower the foam stability, the faster the foam will collapse and release the entrapped air.

Much like emulsion characteristics, foaming characteristics can be influenced by a number of variables. Small amounts of contaminants and oil oxidation products of the liquid generally increase the foaming characteristics. Researchers at Rock Island Arsenal have found that viscosity, temperature, grease contamination, and water contamination all affect the foaming characteristics of hydraulic fluids and liquids used in recoil mechanisms (Ref. 92). Their data indicate a general trend, with exceptions, that increased viscosity is accompanied by greater foaming tendency and foam stability. The liquids tested showed a decrease in foaming tendency and in foaming stability with an increase in temperature. Contamination caused by grease in small amounts (1 to 5%) produced significant increases in foaming tendency and foam stability. Contamination caused by water produced erratic results. Very small concentrations of water, 0.08%, did not have much effect. With higher concentrations of water (1 to 5%), foaming tendency increased. Foam stability increased at lower temperatures with increased water concentration, but at the higher temperatures the foam stability decreased with the larger percentage of water.

3-2.12.3 Tests for Emulsion and Foaming Characteristics

Discussions of emulsion and foaming characteristics tests follow:

1. *Emulsion Characteristics*

   a. *Emulsion Characteristics of Steam-Turbine Oils*
   Test Method. ASTM D 1401 (Ref. 93)

This method is intended to test steam turbine oils but may be used to test liquids of other types. The method describes a procedure used to measure the ability of oil and water to separate from each other.

A 40-mL sample of the test liquid and 40 mL of distilled water are stirred for 5 min in a graduated cylinder with a flat paddle turning at 1500 rpm. The time, in multiples of 5 min, required for the emulsion to be reduced to 3 mL or less is reported. If the emulsion is more than 3 mL after 1 h, the test is discontinued and the amounts in mL of oil, water, and emulsion remaining are recorded. The results are reported as a series of four numbers—the number of mL of oil, the number of mL of water, the number of mL of emulsion, and the test time. For example,

Results	Comment
40-40-0(20)	Complete separation in 20 min
40-37-3(30)	Emulsion reduced to 3 mL in 30 min

Test was terminated.

   b. *Emulsifying Tendency*
   Test Method. Federal Test Method 3201 (Ref. 94)

Downloaded from http://www.everyspec.com

This method is used to determine the emulsifying tendency of petroleum and petroleum-like products.

A 40-mL sample of the oil or liquid to be tested is mixed in a graduated cylinder with a 40-mL sample of an emulsifying agent (distilled water, sodium chloride solution, or synthetic seawater, as required by the fluid specification). The cylinder is immersed in a bath, as shown in Fig. 3-48. The mixture is stirred at 1500 rpm for 5 min at the temperature specified by the liquid specification. The resulting emulsion is allowed to remain undisturbed at the test temperature and for the time required by the liquid specification. It is then examined for any separation and whether the end product conforms to the liquid specification is reported.

2. *Foaming Characteristics*

Test Methods. Federal Test Method 3211 (Ref. 95)
ASTM D 892 (Ref. 96)

These methods are intended to determine the foaming characteristics of lubricating oils at specified temperatures. A means of empirically reading the foaming tendency and the stability of the foam is described.

A 190-mL sample of the liquid to be tested is placed in a 1000-mL graduated cylinder, as shown in Fig. 3-49. The sample is maintained at a temperature of 24°C (75°F) and blown with air for 5 min. The volume of foam is measured. The sample is allowed to settle for 10 min and the volume of foam measured again. The test is repeated at 93.3°C (200°F) on a second sample and then repeated again on the second sample at 24°C (75°F). Foaming tendency is reported as the total volume of foam in milliliters formed during the 5-min air-blowing period. Foam stability is reported as the milliliters of foam remaining after the 10-min standing period. The foaming requirements of several military specification liquids are shown in Table 3-6.

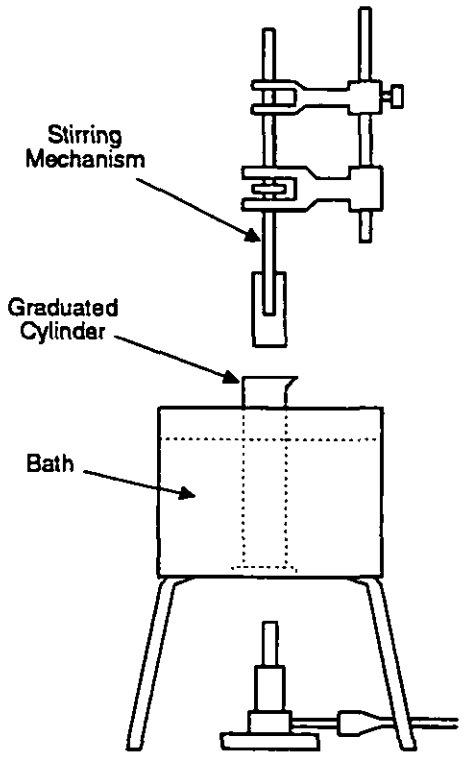

Figure 3-48. Emulsion Test Apparatus

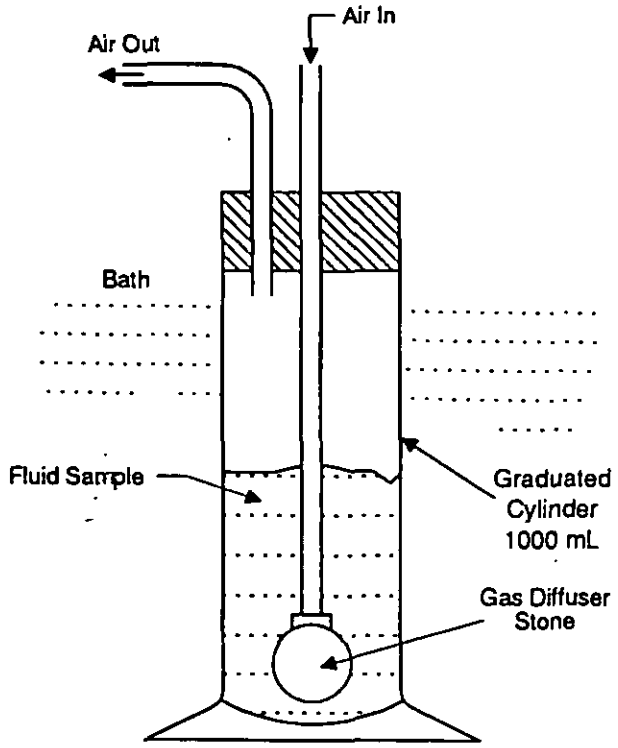

Figure 3-49. Foaming Test Apparatus

3-2.13 GAS SOLUBILITY

Hydraulic fluids, like other liquids, tend to dissolve any gases that may be in contact with them. The amount of gas dissolved by a particular liquid depends upon the composition of the gas, the composition of the liquid, the temperature, and the pressure. Table 3-7 (Ref. 97) lists the dissolved gas contents of several fluids at atmospheric pressure. A distinction should be made between dissolved gases and trapped, or entrained, gases. The dissolved gases have virtually no effect on the physical properties of the liquid. They become important only when they are evolved from solution in the form of bubbles and create a foam or a pocket of gas in the system. Once the gas has evolved from solution, the physical properties of the liquid-gas mixture are greatly influenced by the resulting foam (Ref. 89).

The solubility of gases in liquids is generally considered to be inversely proportional to the temperature and directly proportional to the pressure. Log-log graphs of gas solubility vs temperature are linear over moderate ranges of temperature (Ref. 89). Leslie (Ref. 88) has reported that the solubility of gases in many lubricating oils increases with rising temperature. Increases in the solubility of nitrogen in

Downloaded from http://www.everyspec.com

TABLE 3-6. FOAMING REQUIREMENT OF MILITARY SPECIFICATION LIQUIDS METHOD ASTM D 892

FLUID	TEMPERATURE		FOAMING TENDENCY	FOAM STABILITY
	°C	°F	Foam Volume, mL, at end of 5-min blowing period, max	Foam Volume, mL, at end of 10-min settling period
MIL-H-5606F	24	75	65	Complete Collapse
MIL-H-27601A	24	75	75	Complete Collapse
	93.5	200	75	Complete Collapse
	24	75	75	Complete Collapse
MIL-H-83282C	25	77	65	Complete Collapse
MIL-H-46170B	24	75	65	Complete Collapse
	93.5	200	65	Complete Collapse
	24	75	65	Complete Collapse
MIL-H-6083E	24	75	65	Complete Collapse
	93.5	200	65	Complete Collapse
	24	75	65	Complete Collapse
MIL-H-87257	25	77	65	Complete Collapse
MIL-H-53119	25	77	65	Complete Collapse

two petroleum oils at 177°C (350°F) over that at room temperature are shown in Fig. 3-50. This figure also shows that increasing pressure has a much greater effect on nitrogen solubility in distillate white oil than does increasing temperature. In general, pressure has a greater effect on gas solubility than does temperature, but not for all liquids. In Fig. 3-50 temperature is the more significant factor in the case of the naphthenic oils. Increases in the solubility of air with increasing pressure for some different types of hydraulic fluids are given in Fig. 3-51. It should be noticed that air solubility in silicone and petroleum oils increases more rapidly with increasing pressure than it does for the polar water base or phosphate-ester-type fluids.

Since solubility limits are affected by both temperature and pressure in a given liquid, changes in temperature and pressure occurring within the system can result in dissolved gases being expelled from solution. Once this happens, the evolved gas bubbles can constitute up to 15% of the total liquid plus foam volume and have serious effects on the hydraulic system performance (Ref. 89). Pump delivery is reduced and the pump is subject to cavitation damage. The compressibility of the hydraulic-fluid-foam mixture is increased, its bulk modulus decreased, and control stability and component life suffer. Even when system design has provided for such eventuality, it still takes time for the entrapped gas to be transported back to the reservoir or air-oil separator where it can be separated from the hydraulic fluid. Reports of hydraulic system malfunctions have frequently been traced to air separation problems. Dead-ended or single-line systems similar to simple hydraulic brake systems are particularly prone to air evolution and entrapment (Ref. 89). A small amount of liquid circulation built into such systems can help to relieve the problem.

3-2.14 LOW-TEMPERATURE STABILITY

3-2.14.1 General

Hydraulic fluids are often stored for prolonged periods of time at low temperatures. During this storage, the liquid should not undergo any permanent changes in its properties or show evidence of gelling, crystallization, or separation of any of its components. Gelling is the formation of jelly-like materials due to coagulation of a component or components of the liquid. Crystallization is the formation of crystals or crystalline material by a component or components of the liquid. Separation is the removal from suspension or solution of components of or additives in the liquid. Many specification liquids, however, are deemed to have satisfactory low-temperature stability if any separated components

Downloaded from http://www.everyspec.com

TABLE 3-7. DISSOLVED GAS CONTENTS OF VARIOUS FLUIDS AT ATMOSPHERIC PRESSURE (Ref. 97)

GENERAL NAME	DISSOLVED SATURATED GAS CONTENT, volume %
Water	1.5
Phosphate Ester Hydraulic Fluid	8.0
MIL-H-5606F, Petroleum-Base Hydraulic Fluid	12.0
MIL-H-83282C, Synthetic PAO-Base Hydraulic Fluid	11.0
Light Spindle Oil	10.0
Antiwear Hydraulic Oil	9.0
High-Pressure, Antiwear Hydraulic Oil	10.0
Gas Turbine Lubricating Oil	10.0
Missile Hydraulic and Preservative Fluid	9.0
Low-Viscosity Missile Hydraulic Fluid	10.0
Oxidation-Inhibited Insulating Oil	10.0
Castor Oil	4.0
Silicate Ester	14.0-15.0
Silicone Dielectric Fluid	14.0-17.0
Electronic Liquid	27.0-41.0
Chlorotrifluoroethylene Hydraulic Fluid	18.0

From Operator's Manual of "Aire-Ometer", a Dissolved Gas Measuring Instrument; courtesy of Seaton-Wilson, a BEI Electronics Co.

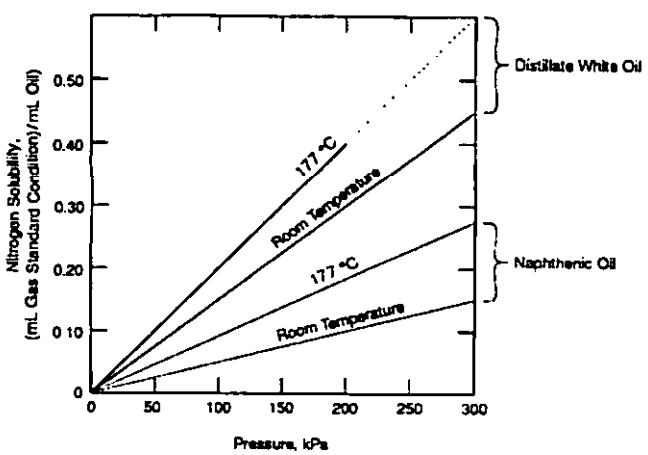

Reprinted by permission of Society of Tribologists and Lubrication Engineers. All rights reserved.

Figure 3-50. Nitrogen Solubility vs Pressure of Two Petroleum Products (Ref. 88)

readily return to solution at the lowest anticipated operating temperature.

Low-temperature properties of hydraulic fluids become important when storing fluids in cold environments or when hydraulic systems are subjected to periods of nonoperation in cold environments. Formation of gels or crystals or separation of components can cause clogging of filters, plugging of small orifices and clearances, or lack of lubrication to vital components.

3-2.14.2 Test Methods for Low-Temperature Stability

Discussion of several test methods for low-temperature stability follows:

1. *Viscosity Stability at Low Temperature*

   Test Methods. Federal Test Method 307 (Ref. 98)
   ASTM D 2532 (Ref. 99)

Change in the viscosity of fluids subjected to low temperatures is often used as a criterion of low-temperature stability. This method describes a procedure used to determine the viscosity stability of transparent fluids at −53.9°C (−65°F). In this method a sample of the lubricant is placed in a glass-capillary-type viscometer in

Downloaded from http://www.everyspec.com

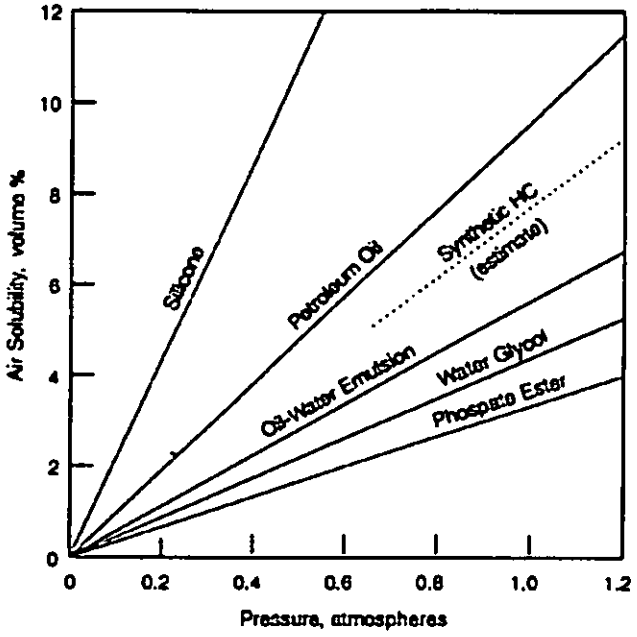

Reprinted from *Fluid Power Design Handbook*, p. 7, by courtesy of Marcel Dekker, Inc.

Figure 3-51. Solubility of Air in Liquids (Ref. 65)

a bath at –53.9°C (–65°F). The kinematic viscosity of the sample is then determined. The viscometer and the sample are kept in the bath at –53.9°C (–65°F) for 72 h, and determinations of the kinematic viscosity are made at intervals throughout the 72-h period. Changes in viscosity with time provide a measure of low-temperature storage instability.

2. *Gelling, Crystallization, and Separation*

Test Method. Federal Test Method 3458 (Ref. 100)

This method is used to determine the tendency of components of finished oil blends to be incompatible or to form gels during low-temperature exposure.

A 100-mL sample of the liquid to be tested is placed in a glass jar and stored for 72 h at the temperature required by the liquid specification. At the end of the 72-h period, the sample is removed from storage and immediately examined visually for evidence of gelling, separation, or crystallization. If there is any evidence of gelling, separation, and/or crystallization, the liquid is reported as unstable at the specified temperature.

3. *Turbidity*

Test Method. Federal Test Method 3459 (Ref. 101)

This method is used to determine the stability at low temperatures of finished liquid blends.

A 237-mL sample of the liquid to be tested and a 250-mL sample of a standard composed of barium chloride, sulfuric acid, sodium hydroxide, and distilled water are stored at the temperature for the number of hours required by the liquid specification. At the end of the storage period, the standard is shaken vigorously for 10 s. The liquid sample is also shaken vigorously for 10 s. The turbidity of the sample liquid is compared to that of the standard and reported as less than, more than, or equal to the standard. Also reported is any evidence of gelling, crystallization, and/or solidification of the sample liquid.

3-2.15 SEDIMENTATION

Sediment is anything that settles out of a liquid. In hydraulic fluids and lubricating liquids, the definition of sediment is usually restricted to insoluble products that are present in the liquid because of refining or production processes or because of chemical reactions that occur in the hydraulic system during use. Sedimentation is usually distinguished from contamination, which is any undesirable matter, soluble or insoluble, that is introduced into the hydraulic fluid because of improper handling or storage, use of unclean hydraulic systems, leaks in systems, etc. (Contamination is discussed in Chapter 7.) It is present as dust, dirt, metal, and rust particles picked up from piping and storage vessels in most new commercial hydraulic fluids as a result of production and refining. In used hydraulic fluids sedimentation would include these solids as well as metal wear particles, corrosion products, oil oxidation products, or other insoluble oil degradation products.

Sedimentation can become quite critical in hydraulic systems that have close-tolerance moving parts or small orifices. The sediment can settle in these areas and produce a tarnish or sludge, which can seriously hamper the operation of the system. Furthermore, sediment can clog filters and reduce their efficiency. Candidate hydraulic fluids have been known to be rejected, even though they satisfied all specification requirements, because they experienced sufficient chemical changes to produce excessive amounts of sediment.

The procedure used to test for trace sediments in lubricating liquids is given by Federal Test Method 3004 (Ref. 102) and ASTM D 2273 (Ref. 103). These methods describe the procedure used to determine trace amounts less than 0.05 volume % sediment in lubricating liquids. A 50-mL sample of the test liquid is mixed with 50 mL of naphtha in a trace sediment tube similar to that shown in Fig. 3-52 and centrifuged at a given speed for 10 min. The mixture is decanted and the sediment is left in the tube. Another mixture of 50 mL naphtha and 50 mL test liquid is mixed in the same tube and again centrifuged for 10 min. The final volume of the sediment is noted and the results are reported as the volume of sediment/100 mL of sample liquid.

3-3 LUBRICATION PROPERTIES

3-3.1 GENERAL

A hydraulic fluid should be a good lubricant so that friction and wear in a hydraulic system are reduced to a minimum. The components of a hydraulic system contain many

Downloaded from http://www.everyspec.com

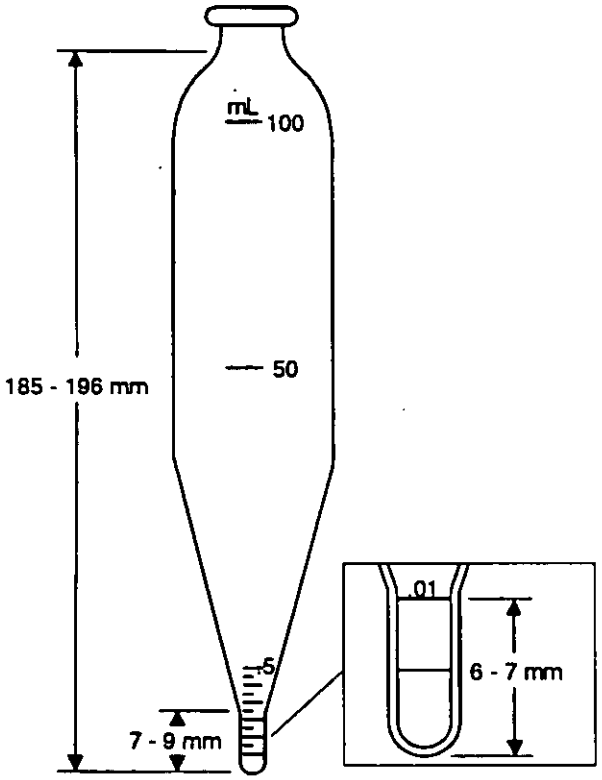

Figure 3-52. Trace Sediment Test Tube

surfaces which are in close contact and which move in such relation to each other that the hydraulic fluid must separate and lubricate. Wear in hydraulic pumps, cylinders, motor controls, valves, and other components can result in increased leakage, loss of pressure, less accurate control, or failure. Protection against wear is often a principal reason for selection of a particular hydraulic fluid since most components of hydraulic systems operate at some time under conditions that can lead to extreme wear, especially during starting and stopping of the system.

Varying degrees of lubrication and wear-preventing ability are needed for different systems. The pump design, the system operating temperatures and pressures, component design, and environmental conditions should all be considered when selecting a hydraulic fluid.

Two fundamental and distinct modes of lubrication are generally recognized—hydrodynamic and boundary. When hydrodynamic conditions exist, a liquid film entirely separates the moving parts. In the boundary condition, contact exists between the mating surfaces. The difference between hydrodynamic and boundary lubrication is clear; however, there is no sharp line of demarcation, but rather a gradual transition between the two.

3-3.2 HYDRODYNAMIC LUBRICATION

Hydrodynamic lubrication, sometimes termed full film lubrication, is a lubrication regime in which a liquid film fully separates the relatively moving surfaces. Under ideal hydrodynamic conditions of lubrication, there is essentially no wear since the moving parts do not touch each other. Under these conditions the parameters of importance are liquid, viscosity, surface speed, and pressure.

Most of the theory of hydrodynamic lubrication is based on the early work of Tower and Reynolds. Full hydrodynamic lubrication offers the significant advantages of low wear rates and low friction. Hydraulic systems should be designed to take full advantage of hydrodynamic lubrication. The coefficient of friction in hydrodynamic lubrication is of the order of 0.001 to 0.010 (Ref. 104).

3-3.3 TRANSITION FROM HYDRODYNAMIC TO BOUNDARY LUBRICATION

A given liquid film between moving parts decreases in thickness as the pressure increases and/or the liquid viscosity decreases. As the film becomes thinner, a point is reached at which the laws of hydrodynamics no longer fully apply because the effects of surface or boundary forces are no longer negligible. As the film becomes still thinner, a state is ultimately reached in which metal-to-metal contact occurs. These transitions influence the coefficient of friction as shown in the Stribeck diagram in Fig. 3-53. In Fig. 3-53 the coefficient of friction is plotted as a function of the dimensionless parameter ZN/p where Z, N, and p are the fluid viscosity, relative surface speed, and pressure, respectively.

In the hydrodynamic region the coefficient of friction is a linear function of ZN/p. As ZN/p decreases, the film thick-

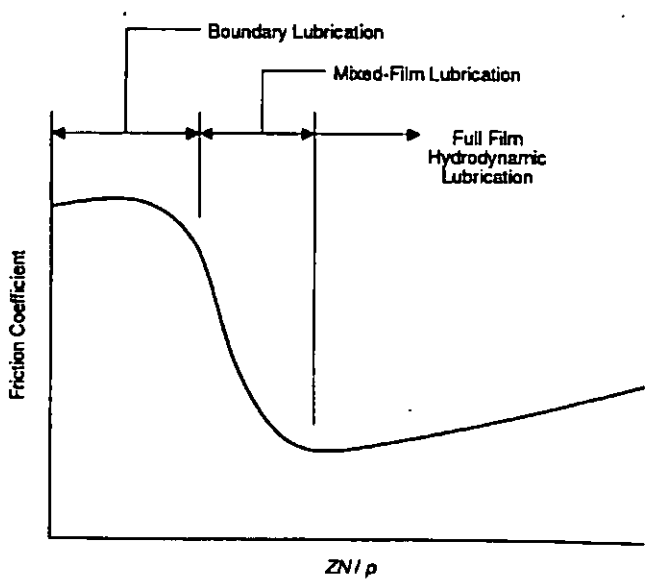

Figure 3-53. Stribeck Diagram for Coefficient of Friction

Downloaded from http://www.everyspec.com

ness is reduced and the curve begins to deviate from linearity. As ZN/p is decreased further, a point is reached at which both boundary and hydrodynamic effects prevail in combination. Further decrease in ZN/p will ultimately rupture the film and the curve will show a sharp break upward. The minimum point is then regarded as the start of the transition from hydrodynamic to boundary lubrication. There is no sharp line of demarcation, but there is an intermediate zone in which hydrodynamic and boundary effects are both present. This zone is sometimes called the semifluid, mixed-film, or elastohydrodynamic lubrication zone.

The condition of full hydrodynamic lubrication is the most desirable; however, all of the factors that make it possible are not always present. Sometimes speeds are so slow or pressures so great that even a very viscous liquid will not prevent metal-to-metal contact. Other cases of stop-and-start operation, reversals of direction, or sharp pressure increases may cause the collapse of any liquid film that had been established. These conditions are not conducive to hydrodynamic lubrication and occur in almost all systems at one time or another.

3-3.4 BOUNDARY LUBRICATION

Boundary lubrication is a lubrication regime that results when the fluid film between two relatively moving surfaces possesses insufficient film strength to prevent contact between the surfaces. When boundary lubrication exists, the coefficient of friction is independent of both liquid viscosity and sliding velocity. There are different degrees of severity under which boundary lubrication will prevail; some are only moderate and others are extreme. Blok (Ref. 104) classifies the degrees of boundary lubrication on the basis of the mechanical conditions as follows (Ref. 104):

1. Low pressure and low temperature, or mild boundary lubrication as found in low-speed sleeve bearings, leaf springs, and hinge joints
2. High-temperature boundary lubrication as found in cylinders of some steam and internal combustion engines, and in certain high-speed sleeve bearings
3. High-pressure boundary lubrication as generally found in cases involving rolling contact at high pressures but with little frictional or external heat
4. High pressure and high temperature, or extreme boundary lubrication, as found in highly loaded hypoid or other gears having high loads and a high degree of sliding friction.

The temperature and pressure at the region of contact are the factors that determine the severity of the boundary lubrication. All types of boundary lubrication are characterized by the rupture of the liquid film and some degree of metal-to-metal contact. The conditions of boundary lubrication should be avoided if possible because of the resulting increase in power consumption and the high degrees of friction and wear that occur.

3-3.5 EXTREME-PRESSURE LUBRICATION

Extreme boundary lubrication (par. 3-3.4) in which both temperature and pressure are very high is often referred to as extreme-pressure (EP) lubrication. EP conditions exist in hydraulic systems in pumps, motors, and actuators and are characterized by welding of portions of mating surfaces followed by the tearing away of relatively large particles of the metal. A variety of special lubricants with properties tailored to meet the severity of the particular application can frequently be used when EP conditions exist. These special properties are generally derived from the various additives contained in the fluid (See par. 5-6.2.), and the net effect is an increase in the load-carrying ability of the fluid.

When EP conditions exist, lubrication depends upon a combination of mechanical and chemical effects. Part of the lubrication may result from an absorbed film that is present on the two surfaces and part from additives in the liquid that chemically attack these surfaces where, as a result of high pressure and high sliding velocity, exceedingly high temperatures result. The formation of reaction products then prevents seizure of the moving parts and may reduce friction. The temperature involved may be approximately 480°C (900°F) or higher, so these reactions are often very rapid.

There are various degrees of EP conditions and various types of EP additives to meet them. The type of additive selected for any particular application depends on the severity of the boundary conditions. Different types of additives are used for high-temperature boundary conditions from those used for high-pressure boundary conditions. Because of the range of conditions through which a system may operate, it is frequently necessary to include more than a single additive, i.e., one for the more severe conditions and another for the less severe conditions. Certain disadvantages may result from the use of EP additives. Some additives may increase the emulsifiability of the fluid and make it undesirable for applications requiring rapid separation of fluid and water. Some of the more effective EP additives also have a tendency to react with certain structural metals or with some of the synthetic hydraulic fluids.

3-3.6 DEFINITION OF TERMS USED IN DESCRIBING LUBRICATING CHARACTERISTICS

The more common terms used to define the lubricating ability of a liquid are film strength, oiliness, and lubricity. These terms are not precise, and they are no longer included in ASTM D 4175 (Ref. 105), which lists standard terminology relating to lubricants. The terms have been used for many years, however, and do appear in most of the literature pertaining to the lubricating characteristics of liquids.

3-3.6.1 Film Strength

Film strength refers to the ability of a surface film to prevent contact between two surfaces moving relatively to one

Downloaded from http://www.everyspec.com

another. In general, the higher the viscosity, the higher the film strength. A high film strength is primarily inferred from a high load-carrying capacity and is seldom directly measured. It is possible to increase the film strength of a liquid by using additives.

3-3.6.2 Oiliness

Oiliness is the property of a liquid that causes films of two liquids of identical viscosity to exhibit different coefficients of friction. Oiliness is associated with boundary lubrication and the intermediate zone between boundary and hydrodynamic lubrication. The oiliness of a liquid can be increased by the use of additives, which are usually oils of animal or vegetable origin and have certain polar characteristics. A polar molecule has a strong affinity for the metal surface with which it comes in contact and for like molecules. Such a molecule is not easily dislodged from its attachment to the surface. For moderate boundary conditions damage to sliding parts can be effectively reduced by the use of oily agents.

3-3.6.3 Lubricity

Lubricity is the ability of a liquid to impart low friction under boundary conditions. A fluid that forms a film of low shear strength is said to have good lubricity. Lubricity is a complex function that depends upon the oiliness of the liquid, the extreme pressure and antiwear properties of the liquid, and the properties of the rubbing surfaces.

3-3.7 PREVENTION OF WEAR

Complete elimination of wear is practically impossible. Minimum wear occurs under conditions of hydrodynamic lubrication, whereas maximum wear occurs under conditions of boundary lubrication. There are, however, several approaches by which the wear rate under boundary lubrication conditions can be reduced to a satisfactory or controllable level. The main factors that determine the rate of wear can be classified into two basic types: mechanical and lubrication. Proper consideration of these two factors can produce an acceptable wear rate.

3-3.7.1 Mechanical Factors

The mechanical factors that affect the wear rate are the choice of materials, the surface finish, and the operating conditions.

Wear can often be reduced by the proper choice of materials for the moving parts. In general, softer materials wear more rapidly than harder materials. There is, however, no direct relationship between hardness and resistance to wear. Materials also differ in their ability to resist the various types of wear. For example, materials selected for their ability to resist abrasion might be more sensitive to corrosion. Thus it is necessary to select materials that will resist the most serious type of wear anticipated.

The combination of metals used can greatly influence the wear. Some metals are very susceptible to wear when rubbed against themselves, whereas others are very susceptible to wear when rubbed against different types of metals. In practice, the composition chosen for a given part is influenced by many factors other than wear. Structural strength, weight, cost, and availability may force a compromise between minimum wear and optimum performance.

The surface finish of mating parts becomes particularly important during break-in or periods of initial wear. If one of the two mating surfaces has a rough finish initially, considerable wear may take place. Although it is generally desirable to have as smooth a surface as possible, there are instances when surfaces of controlled roughness are desired so that a "wear-in" or mating of parts may occur during the initial run-in period or break-in.

Operating conditions of pressure, temperature, and rubbing speed also affect wear. Increased pressure generally reduces film thickness and increases the extent of metal-to-metal contact and wear. High temperature may cause wear due to a decrease in viscosity. Excessive high speeds may result in overheating at local points. Moderate temperatures and pressures are therefore preferred from a wear standpoint. However, the optimum conditions for minimal wear may not be the optimum conditions under which to achieve high efficiency or maximum power from a hydraulic system component.

3-3.7.2 Lubrication Factors

Decreases in fluid viscosity in a system operating under hydrodynamic lubrication will decrease the thickness of the liquid film. If the decrease is sufficient to allow boundary conditions to be reached, metal-to-metal contact occurs and wear increases. Therefore, viscosity would be expected to have an inverse effect on rate of wear—the greater the viscosity, the less would be the expected wear.

Since wear is essentially a phenomenon resulting from friction, it is expected that additives capable of reducing friction under boundary conditions would simultaneously reduce wear. However, there can be instances when there is little or no correlation between friction and wear under boundary lubrication conditions. Some additives that effectively reduce friction have little effect upon wear, whereas others reduce wear and have little effect upon friction. This lack of correlation is probably due to the fact that wear takes place momentarily in isolated spots and friction is normally measured as an average for a larger area and over a longer time interval (Ref. 104).

3-3.8 TEST METHODS FOR LUBRICATING PROPERTIES

Numerous test methods have been proposed and several have been adopted for evaluating the lubricating and wear-reducing properties of fluids. The majority of these tests has

Downloaded from http://www.everyspec.com

been developed for materials other than hydraulic fluids, such as lubricants, greases, and, in some cases, solid lubricants. However, the basic test procedures are adaptable to the evaluation of hydraulic fluids, and several military specifications for hydraulic fluids call for these tests or some modification of them.

The test methods fall into three general categories: bench-type tests using nonsimulating test elements, simulated hydraulic systems, and the more elaborate load-carrying and scuffing tests. Standard test procedures, either ASTM or Federal, have been written for some of the test methods.

None of the test methods described in the paragraphs that follow give any indications of the expected "life" of a lubricant or liquid. The engineer or designer is expected to establish proper lubrication procedures and lubricant change intervals. The problems become even more complicated in hydraulic systems because the liquid is both a lubricant and a power transfer fluid. For hydraulic systems operating with sophisticated hydraulic fluids and/or extreme operating conditions, falling back on "accepted practice" can be expensive, either in terms of wasted hydraulic fluids or damaged equipment.

3-3.8.1 Bench-Type Friction and Wear Testers

Several bench tests have been developed to measure the lubricating ability of liquids. Each test employs a different type of apparatus that uses a unique combination of test elements. The testers are similar in that two well-defined surfaces separated by a liquid film are in motion with respect to each other. The coefficient of friction is usually determined by measuring the restraining force on one of the test elements. Wear is determined by the loss in weight of the parts or by the dimensions of the wear scar. Boundary lubrication characteristics are determined by increasing the load on the surfaces until seizure occurs.

Because of their differences, the various bench testers do not necessarily rate a given series of liquids in the same order, and results from a single test procedure can be misleading. Also the results obtained do not always correlate well with actual operation. In many instances, the results of several different bench tests may be taken as a whole to determine the lubricating ability of a given hydraulic fluid. Experience has shown that application of most of these test procedures will separate those hydraulic fluids that are extremely poor lubricants from those which are potentially good lubricants.

Some of the more commonly used bench-type testers and their test methods are described in the paragraphs that follow.

3-3.8.1.1 Timken Tester

Test Methods. Federal Test Method 6505 (Ref. 106)
ASTM D 2782 (Ref. 107)

In the Timken test the lubricating properties of fluids are evaluated by assessing the resulting wear when a steel test cup (or ring) is rotated against a steel test block at a spindle speed of 800 ± 5 rpm. The test block is loaded against the test cup as shown in Fig. 3-54(A). The test fluid is heated to 37.8 ± 2.8°C (100 ± 5°F) and flowed over the test pieces. After an initial break-in run, a predetermined starting load is applied and the test is run for 10 min ± 15 s unless scoring occurs before that time. If no scoring occurs, the machine is unloaded and stopped, the test pieces are changed, and the test is restarted. On this second run the load is increased in 44.5-N (10-lb) increments until scoring occurs. Once scoring is observed, the load is decreased by 22.2 N (5 lb) to determine whether scoring occurs at that lower load. The test report includes the "OK value", which is the maximum load at which no scoring occurs, and the "score value", the load at which scoring or seizure occurs.

Precision:

a. Repeatability, 30% of the mean value
b. Reproducibility, 74% of the mean value.

3-3.8.1.2 Almen Tester

In the Almen test a cylindrical rod is rotated in a split bushing, which is pressed against the rod, as shown in Fig. 3-54(B), while submerged in the test fluid. The frictional force is measured by a restraining force on the split bushing. The frictional force is inversely proportional to the lubricating ability of the liquid. Two versions of the Almen test are conducted: the Almen EP test and the Almen wear test.

In the Almen EP test the machine is run without an applied load for 30 s as a break-in. Weights are added every 10 s in multiples of 8.9 N (2 lb) until failure occurs as indicated by seizure or sudden increase in torque. Test results are expressed as the torque and load that cause seizure.

In the Almen wear test the machine is run without an applied load for 30 s as a break-in. Four 8.9-N (2-lb) weights are added at 10-s intervals. Operation is continued for 20 min. Total weight loss of the journal and the bushings in milligrams is determined and is reported as the wear.

3-3.8.1.3 Falex Tester

Test Methods. Federal Test Method 3807 (Ref. 108)
Federal Test Method 3812 (Ref. 109)
ASTM D 3233 (Ref. 110).

In the Falex test a cylindrical rod (journal) is rotated between two hard, V-shaped bearing blocks, which are pressed against the rod as shown in Fig. 3-54(C). Friction torque is continuously monitored. Both the journal and the V-blocks are submerged in the liquid under test. The two federal test methods for this test use the Falex tester in the evaluation of solid film lubricants. However, the basic procedures of the two tests are adaptable to the evaluation of liquids. The test can be run in two ways—as a wear test or as an extreme-pressure (load-carrying) test.

Downloaded from http://www.everyspec.com

For wear testing the machine is run at a specified load for a specified time. The amount of wear is determined as the amount of adjustment that must be made in the loading system to maintain the desired load.

For the EP test the load is increased continuously until seizure occurs. The test begins with break-in of 3 min at a 1334-N (300-lb) load. The load is increased to 2224 N (500 lb) and held for 1 min and then increased in 1112-N (250-lb) increments with a 1-min run until failure occurs. Results are expressed in newtons (pounds) of load at seizure.

The ASTM procedure is a test specifically for liquids. It also uses a journal (AISI 3135 steel), which is locked into a chuck by a locking pin and rotated between stationary V-blocks made of soft, annealed copper immersed in the fluid sample, which has been heated to 48.9 ± 2.8°C (120 ± 5°F). For one version of the procedure, the load on the V-block is set at 1334 N (300 lb) and automatically increased continuously throughout the test until failure occurs or until the load reaches 20,000 N (4500 lb). Failure is defined as breakage of either the locking pin or test journal or the inability to increase the load automatically. The latter will occur if the journal diameter is significantly reduced by wear.

In the second version there is initial break-in at 1334 N (300 lb), after which the load is increased in 1112-N (250-lb) increments over the range of 2224 to 20,000 N (500 to 4500 lb). The load is maintained constant for 1 min at each increment. In each version the maximum load at failure or, if no failure, at 20,000 N (4500 lb) is reported as the fluid rating.

In a modification of the ASTM procedure termed the Gamma-Falex test, a fluid circulation system is incorporated. The test fluid is circulated from the oil cup and through a filter and then is sprayed into the journal/V-block contact area. The purpose of this method is to remove the wear debris generated by the surface contact so that the results are a true indication of the load-carrying ability of the fluid without the influence of solid contaminants (Ref. 111).

3-3.8.1.4 Four-Ball Tester

Test Methods. ASTM D 2596 (Ref. 112)
Federal Test Method 6514 (Ref. 113)
ASTM D 2266 (Ref. 114)
ASTM D 4172 (Ref. 115).

In the four-ball machine (often called the "Shell" Four-Ball Tester), a 12.7-mm (0.5-in.) diameter steel ball is rotated in contact with three similar balls that are stationary and clamped in a fixed position as seen in Fig. 3-54(D). The rubbing surfaces are submerged in the liquid to be tested. The test can be operated as a wear test or an EP test.

For a wear test the machine is operated at a specified temperature, load, and speed with balls of a given material. Federal Test Method 6514 and ASTM D 2266 are used to determine the wear characteristics of lubricating greases

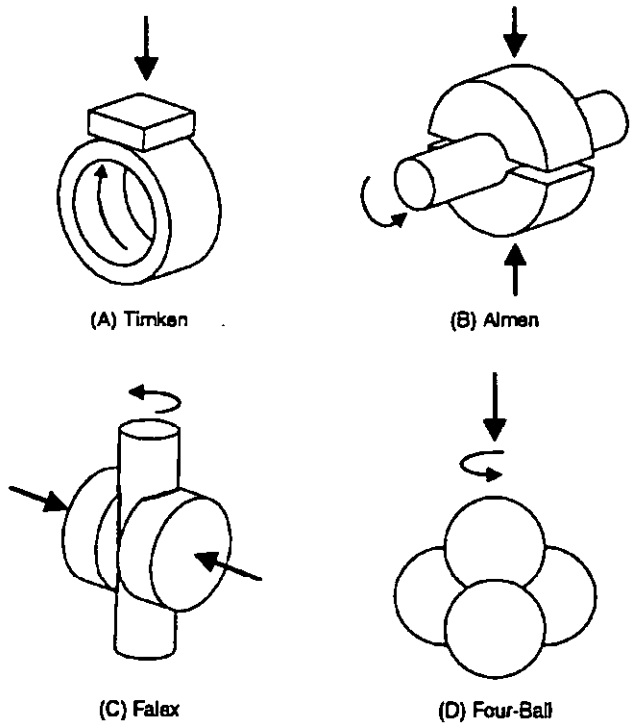

Figure 3-54. Bench-Type Friction and Wear Testers

with the four-ball tester. These procedures require test conditions of 1200 rpm, a load of 391 N, (88 lb), a test temperature of 75°C (167°F), and a test time of 60 min. (These conditions can be adjusted for different fluids.) At the end of the test the scar diameter on the lower three balls is measured under a microscope. The average diameter in millimeters is reported and is a measure of wear under the specified conditions.

The test method of ASTM D 4172 is virtually the same as that of ASTM D 2266 except that it is for liquids rather than greases. The primary difference is a standard loading option that is 147 N (33 lb) in addition to the 391-N (88-lb) loading specified in ASTM D 2266.

For the EP test (ASTM D 2596) the lubricant is heated to 27 ± 8°C (80 ± 15°F). The test unit is initially loaded to 778 N (175 lb) and rotated at 1770 ± 60 rpm for 10 s. Successive runs are made at increasing loads until welding of the balls occurs. The report includes the corrected load at which welding occurs and the load-wear index of the lubricant.

Many variations on the four-ball wear and EP tests are used. Many liquid specifications call for a four-ball test as specified or with certain changes made in the test time, load, speed, or temperature.

3-3.8.1.5 Cameron-Plint High-Frequency Friction Test

The Cameron-Plint Wear Test Apparatus shown in Fig. 3-55 is intended primarily for the rapid assessment of the per-

Downloaded from http://www.everyspec.com

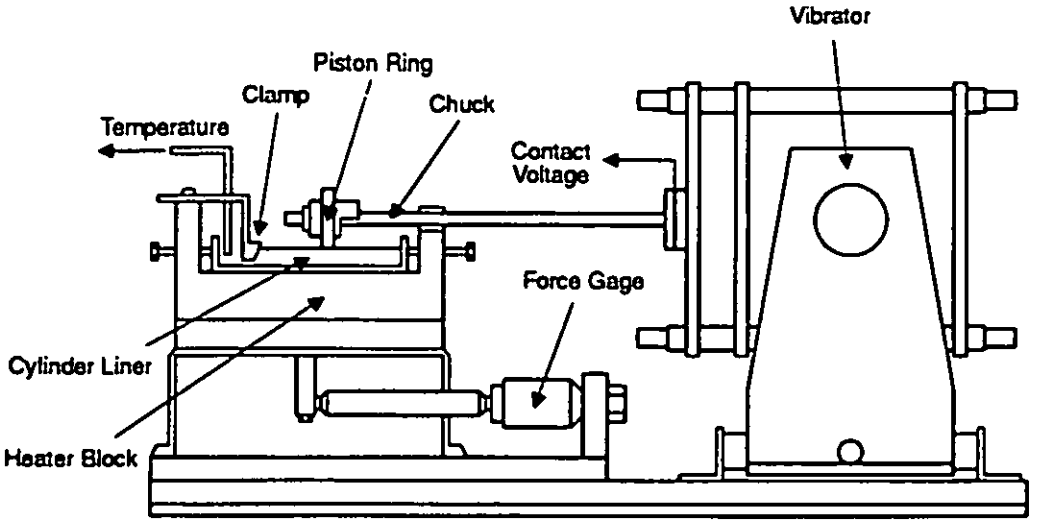

Figure 3-55. Schematic Diagram of the Cameron-Plint Wear Test Apparatus

formance of lubricants and lubricant-metal combinations. In this test an upper specimen slides on a lower plate, with a purely sinusoidal motion, driven by a variable speed motor. The amplitude of the stroke may be varied from 2 to 15 mm at frequencies ranging from 5 to 50 Hz.

The lower (fixed) specimen is mounted in a stainless steel oil bath mounted on a heater block. The opposing (oscillating) specimen is loaded using a spring balance, which has an applied load of between 0 and 250 N. The resulting friction force may then be measured using a piezoelectric force transducer with a resolution of 0.0001 N. The test temperature may be adjusted from ambient to 450°C. The test atmosphere may also be regulated, and a number of gases may be introduced to the chamber which has precisely regulated humidity. Standard test specimens may be used, or test specimens may be machined from appropriate specimen stock as required to ensure that the metal hardness and surface finish of the full-scale components are duplicated.

3-3.8.2 Evaluation of Lubricating Properties by Pump Tests

None of the bench tests give accurate or complete correlation with the operation of hydraulic fluids in a hydraulic system. The final test of the lubricating characteristics of any hydraulic fluid is its actual performance in a hydraulic system. The hydraulic pump is usually the most critical unit as far as lubricating characteristics of the hydraulic system are concerned; therefore, pump tests have been developed and widely accepted for studying lubricating properties of hydraulic fluids.

Pump tests normally involve the simplest hydraulic circuit possible: a pump; a way to maintain system pressure, such as a relief valve; a reservoir; a heat exchanger; and various instruments to measure speed, pressure, temperature, and flow rate. The test is usually run for a specified period of time with a given pump. Critical parts of the pump are examined before and after testing, and the amount of wear determined by changes in dimension or changes in weight.

In addition to data on the lubricating properties of hydraulic fluids, pump tests provide data on the overall performance of the pump system and the functional ability of the hydraulic fluid. Other benefits include actual determination of wear in a simulated system; information on liquid stability; effects of seals and packings, corrosion, and sludge; and the heat and power transfer qualities of the liquid under controlled conditions (Ref. 4).

Several pump tests have been described in the literature. All types of pumps have been used, and test conditions have been widely varied. Some pump tests have been developed specifically for shear stability evaluation (See par. 3-2.5.3.) but will still provide data on the lubricating properties of the liquid. A few of the pump tests have been written into formal test procedures and are discussed in the paragraphs that follow.

3-3.8.2.1 Simulative Recirculating Pump Test

Test Method. ASTM D 2428 (Ref. 116)

This test method covers a procedure for system evaluation of aerospace hydraulic fluids. The method recommends a typical test system geometry, data to be obtained, and control of test variables and procedures to assure a uniform approach to liquid screening and evaluation. Recommendations concerning specific hardware and rigid techniques have been avoided where possible to allow the general method to be used as the state of the art advances. Since the method was purposely generalized, it is important that specified data be taken so that valid comparisons of test results of various liquids can be made. The method consists of recirculative pumping of the test liquid through a system that closely simulates the final system in which the liquid

Downloaded from http://www.everyspec.com

will be used. The wear and lubricating properties of the liquid are determined from evaluation of critical parts of the system before and after the test. This test procedure, however, is not primarily intended for wear and lubrication testing; it is for functional suitability of liquids.

3-3.8.2.2 Pump Loop Wear Test

Test Method. ASTM D 2271 (Ref. 117)

This test method describes a procedure used to measure the wear characteristics of hydraulic fluids used in industrial applications. A fixed volume of the hydraulic fluid is circulated through a pump rig under standard conditions of time, pressure, and temperature for 1000 h. Differences in weight of the pump parts at the start and finish of the test are reported along with the total percent loss.

3-3.8.2.3 Vane Pump Test

Test Method. ASTM D 2882 (Ref. 118)

In this test 11.4 L (3 gal) of the hydraulic fluid are circulated through a vane pump system for 100 h at a pump speed of 1200 ± 60 rpm. The pump outlet pressure is maintained at 13.79 ± 0.28 MPa (2000 ± 40 psi). The fluid test temperature is 65.6 ± 2.8°C (150 ± 5°F) for water-containing fluids and for petroleum and synthetic fluids with a viscosity of 46 mm^2/s at 40°C (104°F). All other petroleum and synthetic fluids are tested at 79.4°C (175°F). The result is the total cam ring and vane weight loss during the test.

3-3.8.3 Other Lubricating Characteristics Tests

Numerous other tests to evaluate the lubricating properties of lubricants have been developed. Several of the procedures that concentrate on the load-carrying ability of liquids have been written into formal test procedures. These test standards are not primarily intended for the evaluation of hydraulic fluids, but mention of them is made here because they have been used to screen potential hydraulic fluids. They are now being used more frequently, and the trend toward more severe operating conditions in aircraft often leads to the use of the same liquid as lubricant and hydraulic fluid. The lubricating properties of the liquid then become extremely important.

3-3.8.3.1 Load-Carrying Ability of Lubricating Oils at 204°C (400°F)

Test Method. Federal Test Method 6511 (Ref. 119)

This method describes a procedure used to determine the load-carrying ability of lubricating oils at 204°C (400°F) with respect to gears.

Two special test gears are mounted in a WADD High-Temperature Gear Machine adapted to a modified Ryder Gear-Erdco Universal Drive System. The test oil is heated to 204°C (400°F) and the gears rotated at 10,000 rpm in cycles of 10 min with uniform increases in gear load for each cycle. The gears are examined for scuffing at the end of each cycle, and the cycles are continued until a set percentage of gear tooth face scuffing is observed. The load-carrying ability is the gear tooth load that produces an average gear tooth scuffing of 22.5%. Results are reported as the percent of load-carrying capacity of the test oil to a reference oil.

3-3.8.3.2 Load-Carrying Capacity of Petroleum Oil and Synthetic Fluid Gear Lubricants

Test Methods. Federal Test Method 6512 (Ref. 120)
ASTM D 1947 (Ref. 121)

The oil or fluid under test is evaluated in a standard gear machine at a series of increasing loads beginning at a load oil pressure of 34.5 kPa (5 psi). The test oil temperature is held at 74 ± 2.8°C (165 ± 5°F) while the test gear speed is maintained at 10,000 ± 100 rpm. After 10 min ± 5 s at those conditions, the machine is stopped, and the test gears are removed and examined for wear. The sequence is repeated until the average scuffed area for all 28 teeth of the test gear is 22.5%. The system is then cleaned out and charged with fresh test oil, and the test is repeated for the reverse side of the gears.

3-3.8.3.3 Gear Fatigue Characteristics of Aircraft Gas Turbine Lubricants at 204°C (400°F)

Test Method. Federal Test Method 6509 (Ref. 122)

This method describes a procedure used to determine the fatigue characteristics of aircraft gas turbine engine lubricants at 204°C (400°F) with respect to gears. (This procedure is very similar to the ASTM procedure described in subpar. 3-3.8.3.2.)

Two special test gears are mounted in a WADD High-Temperature Gear Machine adapted to a modified Ryder Gear-Erdco Universal Drive System. The test oil is heated to 204°C (400°F) and the gears rotated at 10,000 rpm in 10 min cycles with uniform increases in load at each cycle. At the end of each cycle the gears are examined for scuffing. When a predetermined maximum load is reached, the cycle duration is increased to 2 h at constant load. At the end of each cycle the gears are observed for development of fatigue pits, which are large enough to be readily discernible by the human eye.

Results are reported as the percent of load-carrying ability with respect to a reference oil of the test oil and the rating of each fatigue cycle in terms of the number of fatigue pits.

3-3.8.3.4 Load-Carrying Ability of Lubricating Oils (Ryder Gear Machine)

Test Method. Federal Test Method 6508 (Ref. 123)

This method describes a procedure used to determine the load-carrying ability of lubricating oils with respect to

Downloaded from http://www.everyspec.com

gears. (This procedure is very similar to the ASTM procedure described in subpar. 3-3.8.3.2.)

Two special test gears are mounted in a Ryder Gear-Erdco Universal Tester. The test oil is heated to 76°C (168°F), and the gears are rotated at 10,000 rpm in cycles of 10 min each with uniform increases in gear load for each cycle. The gears are examined for scuffing at the end of each cycle, and the cycles are continued until a preset percent of gear tooth scuffing is observed. The load-carrying ability is that gear tooth load which produces an average gear tooth scuffing of 22.5%. Results are reported as the percent of load-carrying ability of the test oil to a reference oil.

Precision:

a. Repeatability. Relative readings should not differ from their mean by more than 10%

b. Reproducibility. Relative readings should not differ from their mean by more than 5%.

3-4 CHEMICAL PROPERTIES

3-4.1 CHEMICAL STABILITY

Most hydraulic fluids are complex mixtures that are affected by temperature, pressure, atmospheric conditions, moisture, metals in the hydraulic system, mechanical shear, and other external influences. These influences define the operating conditions of the hydraulic system, and a hydraulic fluid should be stable under the imposed conditions. Any or all of these influences can change the properties of the hydraulic fluid to such an extent that it may become unsuitable for use in the system for which it was intended. Therefore, it is mandatory that the system be operated with a hydraulic fluid that does not suffer degradation or that changes only to such an extent that its operating ability is not significantly impaired within a defined range of use conditions.

The stability of many types of hydraulic fluids has been extensively studied under a wide variety of conditions in the laboratory. Oxidation, thermal stress, hydrolysis, radiation, and mechanical stress due to shear and cavitation are the primary forces that tend to alter the chemical nature of hydraulic fluids. Stresses due to shear are discussed in par. 3-2.5, and cavitation is discussed in par. 6-2.1.2.

Because of the wide variety of fluid stability data available in the literature, examples of specific hydraulic fluids are avoided in this discussion. Instead relative comparisons are made of the various chemical classes of hydraulic fluids currently available or under development. For additional details the specific references should be consulted.

One of the most difficult aspects of determining stability involves the selection of criteria of change. All hydraulic fluids can and do undergo changes in their properties during use. Some of these changes affect the functional ability of the fluid, some affect the chemical composition, some affect the thermal properties, etc. Some changes may be harmful, whereas others may have no effect on the performance of the hydraulic fluid. For example, changes in color indicate a change in the liquid; however, such a change will not normally affect the functional ability of the liquid. On the other hand, an increase in acid content might result in a hydraulic fluid too corrosive for further use, or the viscosity may change so that the hydraulic fluid no longer performs its function. Obviously then, some properties have much more importance to hydraulic fluid stability than others. Even so, the conditions to which the hydraulic fluid is subjected determine which properties are the critical ones and those most desirable to maintain as stable as possible.

If a liquid encounters one or more of the stresses or forces previously mentioned, the result is generally a change in one or more of the following: viscosity, formation of volatile components, formation of insoluble materials, or formation of corrosive products. Insolubles formed may range in nature from hard particles to sludges and gums. Corrosion products generally form as the result of thermal or oxidative decomposition or from hydrolysis. Volatile components can form as the result of oxidative, thermal, or radiation effects. All of these changes are usually undesirable, and precautions should be taken to avoid them or reduce their effects.

The stability of a hydraulic fluid is also affected by the metals used in the system. Depending on the chemical type of the liquid, certain metals can act as catalysts in the deterioration process. The problem is essentially a question of compatibility of the hydraulic fluid with the metals of construction. (See par. 6-2.1.)

3-4.2 OXIDATION STABILITY

Oxidation stability refers to the ability of a liquid to resist reaction with oxygen or oxygen-containing compounds and is an important factor that affects the storage life of hydraulic fluids and the performance life of hydraulic fluids used in open systems (noninerted). Oxidation results in liquid deterioration and is manifested by changes in certain physical and chemical characteristics of the lubricant, such as viscosity, precipitation of insolubles, lacquer and varnish formation, acidity, and corrosiveness. When the concentration of oxidation products reaches a critical value, depending upon the application, the hydraulic fluid will no longer perform satisfactorily. Many of the newer hydraulic systems reduce the damage from oxidation by either reducing the air content of the fluid with an air-oil separator or by using a sealed reservoir slightly pressurized with nitrogen. Reservoirs pressurized with nitrogen are termed "inerted" because the inert nitrogen supplants the reactive air in contact with the fluid.

The oxidation rates of most types of liquids are temperature sensitive. Degradation products increase with increasing temperature and, as a result, require more frequent hydraulic fluid replacements. The oxidation rate also usually increases with increases in the amount of air and water

Downloaded from http://www.everyspec.com

contamination and with the presence of metallic particles, dirt, and dust. In addition, for petroleum liquids the type of crude oil from which the liquid is derived, as well as the refining methods, may also affect the oxidation rate.

The oxygen necessary for the oxidation reaction usually results from the presence of air contamination in the liquid or exposure to air in open systems. To retain useful hydraulic fluid life at higher temperatures, systems must exclude air, and the hydraulic fluid must be substantially free of dissolved air prior to charging the system. The use of antioxidants can substantially improve the oxidation stability of a liquid and provide prolonged shelf life for fluid storage. Practically all commercial hydraulic fluids are stabilized by antioxidants.

Thermal and/or oxidative stabilities are generally the factors that limit the upper operating temperature of the hydraulic fluids, depending upon the systems in which the hydraulic fluids are used. Most petroleum-base hydraulic fluids are limited to less than 93°C (200°F) operation in open systems, whereas some are capable of 288°C (550°F) operation in closed, inerted systems. The maximum useful temperatures and the oxidation resistance of several types of hydraulic fluids are given in Tables 3-8 and 3-9. The oxidation resistance ratings shown in Table 3-9 are for operation below the recommended long duration operating temperatures of Table 3-8. The polyphenyl ethers and the silicones are the most stable liquids at the higher temperatures. However, most types of synthetic liquids (with the exception of polyalphaolefins) are relatively poor lubricants in comparison with hydrocarbon-base liquids.

Oxidation stability is an important factor in the prediction of the performance of a hydraulic fluid in an oxidizing environment. Without adequate oxidation stability, the life of a liquid may be extremely limited, and unless the liquid is replaced frequently, there is a serious possibility of damage to lubricated parts. Oxidation stability becomes a prime requisite of liquids serving in closed, noninerted lubrication systems and hydraulic systems in which the oil is recirculated if there is any possibility of air leaking into the system. There are some instances in which controlled amounts of oxidation are beneficial. For example, on certain metals the presence of oxide films determines the ability of the metal to be lubricated and prevent surface welding and galling. Complete removal of oxygen from systems containing such metals may cause problems when the oxide surface films revert to bare metals (Ref. 124). This possibility is usually taken care of by use of additives such as tricresyl phosphate.

TABLE 3-8. MAXIMUM OPERATING TEMPERATURE OF HYDRAULIC FLUIDS[a]

HYDRAULIC FLUID TYPE	APPROXIMATE UPPER USE LIMIT, °C (°F)		
	Long Duration (500-1000 h)	Moderate Duration (10-100 h)	Hot Spot Short Duration (< 1 h)
Mineral Oils	135 (275)	149 (300)	177 (350)
Emulsions Water-Glycols	93 (200)	—	—
Alkyl Phosphates (Phosphate Esters)	107 (255[b])	—	—
Super-Refined Mineral Oils, Polyalphaolefins	149-232 (300-450)	288 (550)	371 (700)
Silahydrocarbons	316 (600)	343 (650)	371 (700)
Polyglycols	163-177 (325-350)	191-204 (375-400)	232-260 (450-500)
Dibasic Acid Esters	177 (350)	204 (400)	218 (425)
Neopentyl-Polyol Esters	191 (375)	218 (425)	288 (550)
Silicate Esters	191-204 (375-400)	246-274 (475-525)	302 (575)
Aromatic Phosphate Esters	93 (200)	204 (400)	302 (575)
Halogenated Aromatics	232 (450)	302 (575)	316 (600)
Silicones	218-288 (425-550[c])	288-329 (550-625)	427 (800)
Polyphenyl Ethers	260 (500)	316-371 (600-700)	482 (900)
Perfluorinated Polyalkyl-Ethers	260 (500)	316 (600)	427 (800)
CTFE	177 (350)	177 (350)	193 (380)

a Temperature limits depend on the type of pump used, such as gear, vane, piston, etc.
b Depends on oxidation resistance
c Range due to many viscosities available
— No reliable data

Downloaded from http://www.everyspec.com

TABLE 3-9. OXIDATION AND VARNISHING RESISTANCE OF HYDRAULIC FLUIDS (Adapted from Ref. 124)

HYDRAULIC FLUID TYPE	RESISTANCE TO OXIDATION	TENDENCY TO FORM SOLIDS OR VARNISH
Mineral Oils	Good	—
Water-in-Mineral Oil Emulsions	Good	—
Water-Glycols	Good	—
Alkyl Phosphates	Good	—
Super Refined Mineral Oils, Synthetic Hydrocarbons, and Silanes	Better than mineral oils	Large
Polyglycols	Fair	Small to medium
Dibasic Acid Esters	Better than mineral oils	Large
Neopentyl-Polyol Esters	Better than mineral oils	Large
Siilcate Esters	Fair to good	Small to medium
Aromatic Phosphate Esters	Good	Medium
Halogenated Aromatics	Excellent to 260°C (500°F)	Small
Silicones	Excellent to 204°C (400°F) Good above 204°C (400°F)	Small
Polyphenyl Ethers	Excellent to 260°C (500°F)	Small
Perfluorinated Polyalkyl-Ethers	Excellent to 316°C (600°F)	None
CTFE	Better than mineral oil	None

— No reliable data
From *Hydraulic and Pneumatic Power and Control* (McGraw-Hill 1966) with permission.

3-4.3 THERMAL STABILITY

Thermal stability is the ability of a liquid to resist decomposition by temperature only. It determines the ultimate temperature limit of service for a hydraulic fluid. As design temperatures of new hydraulic equipment continue to rise, the thermal stability of lubricants and hydraulic fluids becomes increasingly important. Much research in recent years has resulted in a number of candidate hydraulic fluids that can operate for long periods at relatively high temperatures. Sustained high-temperature stability of a hydraulic fluid is a necessary characteristic. Ideally, a hydraulic fluid should not degrade significantly between normal system overhauls.

Table 3-10 presents the deterioration temperatures for the same fluids discussed in par. 3-4.2. The polyphenyl ethers and some silicones have high deterioration temperatures (in excess of 316°C (600°F)). However, the silahydrocarbons, super-refined mineral oils, and synthetic hydrocarbons have comparable deterioration temperatures and are better lubricants.. The data presented in Table 3-10 are approximate only and vary depending on the conditions under which the tests are conducted. For example, many nonhydrocarbon liquids are less stable in the presence of ferrous metals than other metals.

Until 1966 measurement of thermal stability had not been standardized, but the usual procedure was to relate it to change in the weight of the liquid sample, development of acidity, formation of insolubles, or changes in other properties such as color, viscosity, pour point, and flash and fire points. (Ref. 125). ASTM D 2160 (See par. 3-4.6.3.2.) is now being used commonly as a standard test method for thermal stability of hydraulic fluids. Various other laboratory and bench scale tests have been developed, which usually involve heating the liquid and measuring changes in the properties. If the container holding the liquid is open to the air, the test becomes a combination oxidation and thermal stability test. In order to separate thermal and oxidative effects, test procedures have been devised by which oxygen is removed from the system and replaced by an inert gas, such as nitrogen or helium. These purely thermal stability tests are carried out in sealed systems. The liquid and con-

Downloaded from http://www.everyspec.com

TABLE 3-10. DETERIORATION TEMPERATURE OF HYDRAULIC FLUIDS (Adapted from Ref. 124)

HYDRAULIC FLUID TYPE	INCIPIENT THERMAL DEGRADATION TEMPERATURE, °C (°F)
Super-Refined Mineral Oils, Synthetic Hydrocarbons, and Silahydrocarbons	316-371(600-700)
Polyglycols	260-288 (500-550)
Dibasic Acid Esters	274 (525)
Neopentyl-Polyol Esters	302 (575)
Silicate Esters	288-316 (550-600)
Aromatic Phosphate Esters	260-316 (500-600)
Halogenated Aromatics	316-343 (600-650)
Silicones	329-370 (625-698)
Polyphenyl Ethers	399-454 (750-850)
Perfluorinated Polyalkl-Ethers	454 (850)

From *Hydraulic and Pneumatic Power and Control* (McGraw-Hill 1966) with permission.

tainer are placed in a chamber that is evacuated and then flooded with nitrogen or other inert gas. This procedure is repeated until little, if any, oxygen remains in contact with or is dissolved in the test liquid. The containers are then heated for a given period of time and the change in the liquid measured.

It is best to determine the thermal stability in an operating system similar to that for which the hydraulic fluid is intended. Pump-loop tests have been devised that can be operated for extended periods at elevated temperatures, but they are often impractical because of size and expense. Thus the sealed bomb tests are often used because the test conditions of interest nearly duplicate those in hydraulic systems.

3-4.4 HYDROLYTIC STABILITY

Hydrolytic stability refers to the ability of hydraulic fluids to resist reaction with water. Undesirable formations of solids or acidic and corrosive materials may result, or a stable water and oil emulsion, which degrades lubricating ability and promotes rusting and corrosion, may form.

Since it is rarely possible to exclude moisture completely from any lubricant or hydraulic system, hydrolytic stability is an important requirement of fluids. It affects the life of liquids both in the original storage containers and in the hydraulic system. In storage, moisture may come in contact with a hydraulic fluid if storage drums are not properly sealed. Within the hydraulic system, temperature changes cause reservoir breathing and condensation of moisture during shutdown periods. Even in supposedly "sealed" systems, moisture is difficult to exclude because of seals, fittings, and other possible leakage points.

Until the advent of synthetic liquids, little consideration was given to hydrolytic stability because of the outstanding hydrolytic stability of petroleum oils. However, stability of synthetic fluids and of some additives in hydraulic fluid formulations must be considered. Table 3-11 presents data on the relative hydrolytic stability of several classes of hydraulic fluids. The most moisture sensitive of these hydraulic fluids are the silicate esters. Hydrolysis of these fluids produces a silicate sludge, which readily clogs filters, servo valves, and capillary passages. Great care is needed to ensure that no water is present in the system prior to charging with this type of fluid.

3-4.5 RADIATION RESISTANCE

It has been only since the early 1950s that the radiation resistance of hydraulic fluids has become important. In the design of modern weapon systems, aircraft, and mechanical devices, hydraulic systems are frequently expected to be exposed to nuclear radiation. Of all system components, only the elastomeric seals are more susceptible to damage by radiation than the hydraulic fluid. (Refer to par. 6-2.2.2

TABLE 3-11. HYDROLYTIC STABILITY OF HYDRAULIC FLUIDS (Adapted from Ref. 124)

HYDRAULIC FLUID TYPE	COMPARATIVE RATING
Super-Refined Mineral Oils, Synthetic Hydrocarbons, and Silahydrocarbons	Excellent
Polyglycols	Good
Dibasic Acid Esters	Fair
Neopentyl-Polyol Esters	Fair
Silicate Esters	Poor
Aromatic Phosphate Esters	Fair to Good
Halogenated Aromatics	Excellent
Silicones	Excellent
Polyphenyl Ethers	Excellent
Perfluoropolyalkylethers	Excellent
CTFE	Excellent

From *Hydraulic and Pneumatic Power and Control* (McGraw-Hill 1966) with permission.

Downloaded from http://www.everyspec.com

for radiation effects on elastomers.) Since conventionally used hydraulic fluids and lubricants are especially susceptible, the effects of radiation on their performance should be considered in the design of almost all systems. There is, however, no general requirement for radiation resistance in most hydraulic fluid specifications.

The intensity of the effects of hydrolysis on petroleum products depends on the amount of radiation absorbed, the formulation of the fluid, and ambient conditions including temperature, pressure, and the gaseous composition of the atmosphere. Generally, the effects of radiolysis can be summarized as (Ref. 126)

1. The liquid darkens and acquires an acrid, oxidized odor.
2. The hydrogen content decreases and the density increases.
3. Gases such as hydrogen and light hydrocarbons evolve.
4. Physical properties change, higher and lower molecular weight compounds form, and the olefin content increases.
5. Both viscosity and viscosity index increase.
6. Polymerization occurs; gels form and a hard, brittle solid finally results.

Radiation exposure is measured in roentgens. However, incident radiation is important only if it is absorbed. Absorbed radiation levels are expressed in terms of the rad. A rad is defined as 100 erg absorbed per gram of absorber or 1 rad = 0.01 J/kg.

According to Bolt, the following generalized effects of increasing levels of radiolysis can be expected (Ref. 127):

1. Below 10^6 rad there are no general problems.
2. 10^6 to 10^7 rad have some effect on methyl silicates, aliphatic diesters, and phosphate esters and cause polymers in solution to degrade. For most other fluids other environmental factors are more important.
3. Radiation in the range of 10^7 to 10^8 rad causes an adverse effect on the oxidation and thermal stabilities of all fluids. The performance of diesters and some mineral oils becomes marginal in this range.
4. Radiolysis in the 10^8- to 10^9-rad range has a significant effect on the thermal and oxidation stabilities of most fluids. A few mineral oils, along with aliphatic esters and aromatic esters, may still be usable at this level.
5. Polyphenols, polyphenol esters, or alkylaromatics are required in the range of 10^9 to 10^{10} rad.
6. Above 10^{10} rad virtually all fluids are rendered useless.

Fig. 3-56 shows the ranges of radiation doses leading to failure of various base fluids.

Considerable work has been done on the repression of radiation damage to organic liquids by additives (Ref. 127). The presence of additives, such as antioxidants and foam inhibitors, may offer a slight repression of the effects of radiation. Generally, better results are achieved by careful selection of base stock than by trying to improve radiation resistance with additives.

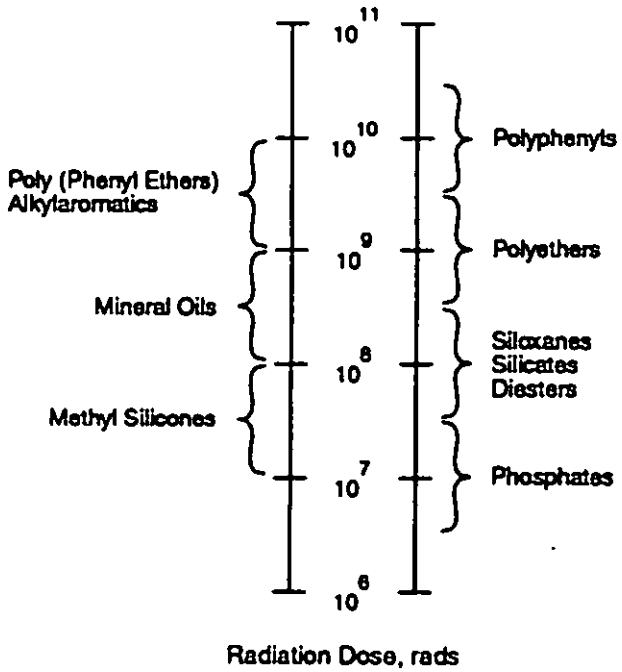

Reprinted with permission. Copyright © by Academic Press.

Figure 3-56. Radiation Limits for Various Base Fluids (Ref. 127)

In general, elastomers are two to ten times more susceptible to radiation damage than are hydraulic fluids. Thus the selection of seal materials can be significantly more critical than the selection of the fluids.

3-4.6 CHEMICAL STABILITY TESTS

A large number of tests to determine the chemical stability of hydraulic fluids have been proposed and developed. Their number and variety are almost overwhelming. Some tests are comprehensive in that they evaluate the overall stability of the liquid over a wide range of conditions. Others are very narrow in their scope in that they evaluate the stability of one property of the liquid over a more limited range of conditions. All of the tests, however, are of two basic modes of operation: (1) tests that measure changes in selected properties of the liquid before and after exposure to controlled conditions and (2) tests that measure the effects of the liquid on a controlled system component or test specimen. Examples of the latter type are pump-loop tests that measure the effect of liquids on the pump, and oxidation-corrosion tests, which measure the changes in metals exposed to the liquids.

Since there is a wide variety of tests, only a few of the more widely accepted procedures are discussed here. These tests can be divided into five areas of application: general indicators of liquid stability, oxidation stability tests, ther-

Downloaded from http://www.everyspec.com

mal stability tests, hydrolytic stability tests, and radiation resistance tests. The inclusion of a test in one particular category does not mean it is limited to that category, only that its predominant use is in that general area.

3-4.6.1 Indicators of Liquid Stability

A large number of the tests for liquid stability consist of determining the values of various properties of the liquid, subjecting the liquid to controlled test conditions, and then measuring the changes in the selected properties. Those properties most often used as indicators of changes in liquid stability are color, viscosity, flash and fire points, neutralization number, carbon residue, precipitation number, and ash content. The viscosity and the neutralization number are the most commonly used indicators. Viscosity test methods have been described in par. 3-2.1.10, and flash and fire points have been discussed in par. 3-2.7.1.1. Details of the test methods for precipitation number and ash content can be found in ASTMs D 91 and D 482 (Refs. 128 and 129, respectively).

3-4.6.1.1 Color

Test Methods. Federal Test Method 102 (Ref. 130)
ASTM D 1500 (Ref. 131)

This method describes a procedure for the visual determination of the color of a wide variety of petroleum products, such as lubricating oils, heating oils, diesel fuel oils, and petroleum waxes. Although the color of a hydraulic fluid may have no correlation with its functional ability, a change in color generally does indicate a change in the fluid and can be used as an indicator of possible stability changes.

A measured sample of the test fluid (diluted with kerosene when samples are darker than ASTM Color No. 8) is placed in a standard glass sample jar in a colorimeter, and its color is compared to the color of standard glass panels. The color of the sample is reported as the number of the next darker glass standard.

Precision. The data that follow should be used to judge the acceptability of results. Results should not be considered suspect unless they differ by more than the following amounts:

a. Repeatability. 0.5 color unit.
b. Reproducibility. 0.5 color unit.

3-4.6.1.2 Neutralization Number

Test Methods. ASTM D 664 (Ref. 132)
ASTM D 974 (Ref. 133)
ASTM D 3339 (Ref. 134)

Changes in acidity or alkalinity are often used as measures of the deterioration of liquids, particularly in stability tests for oxidation and corrosion. Oxidation of most organic materials can result in the formation of acidic compounds.

The term "neutralization number" is often used to express an acidity or alkalinity of lubricating liquids and hydraulic fluids. It is defined as either the number of milligrams of potassium hydroxide required to neutralize all of the acids present in one gram of the sample or the equivalent (in milligrams of potassium hydroxide) number of milligrams of hydrochloric acid required to neutralize all of the bases present in one gram of the sample. The neutralization number is a general term that can refer to the results of different tests, so the test method and the pH of the final solution must be specified.

Three widely accepted test procedures used to determine the neutralization number of liquids have been developed. The methods were developed primarily for petroleum-base materials, and they may give fictitious results when certain synthetic materials are used as hydraulic fluids, i.e., the results may actually indicate the saponification of an ester, excessive hydrolysis of additives, etc. It is suggested that the test method recommended by the manufacturer of a synthetic liquid be used to indicate changes that have occurred in a particular synthetic liquid.

A short discussion of each test method follows:

1. *Neutralization Number by Potentiometric Titration* Test Method. ASTM D 664 (Ref. 132)

This method describes the procedure used to determine the acidic or basic constituents of petroleum products and lubricants. The method resolves these constituents into groups having weak acid, strong acid, weak base, and strong base ionization properties if the dissociation constants of the more strongly acidic or basic compounds are at least 1000 times those of the next weaker groups. In new and used liquids the constituents that may be considered to have acidic characteristics include organic and inorganic acids, esters, phenolic compounds, lactones, resins, salts of heavy metals, salts of ammonia and other weak bases, acid salts of polybasic acid, and additional agents such as inhibitors and detergents. Constituents that may be considered to have basic properties include organic and inorganic bases, amino compounds, salts of weak acids, basic salts of polyacidic bases, salts of heavy metals, and additional agents such as inhibitors and detergents.

To determine neutralization numbers by this method, the sample is dissolved in a mixture of toluene and isopropyl alcohol containing a small amount of water. It is then titrated potentiometrically with alcoholic potassium hydroxide or hydrochloric acid solution using a glass-indicating electrode and a calomel reference electrode. The potentiometer readings are plotted against the respective volumes of titrating solutions, and the end points for each acid or base group are taken at inflections in the resulting curve. When no definite inflections are obtained, which is often the case, end points are taken at meter readings corresponding to those found for standard nonaqueous acidic and basic buffer solutions.

Definition of the terms used to designate the various measured values are

a. *Total acid number.* The quantity of base expressed in milligrams of potassium hydroxide that is

Downloaded from http://www.everyspec.com

required to neutralize all acidic constituents present in one gram of sample

b. *Strong acid number.* The quantity of base expressed in milligrams of potassium hydroxide that is required to neutralize the strong acidic constituents present in one gram of sample

c. *Total base number.* The quantity of acid expressed in terms of the equivalent number of milligrams of potassium hydroxide that is required to neutralize all basic constituents present in one gram of sample

d. *Strong base number.* The quantity of acid expressed in terms of the equivalent number of milligrams of potassium hydroxide that is required to neutralize the strong basic constituents present in one gram of sample.

The results are reported as the total acid number, strong acid number, total base number, and strong base number.

2. *Neutralization Number by Color-Indicator Titration*

Test Methods. ASTM D 974 (Ref. 133)
Federal Test Method 5102 (Ref. 135)
Federal Test Method 5105 (Ref. 136)

This method is intended to determine the acidic or basic constituents in petroleum products and lubricants that are soluble in mixtures of toluene and isopropyl alcohol. It is applicable to determining acids or bases that have dissociation constants larger than 10^{-9} in water. Extremely weak acids or bases having dissociation constants smaller than 10^{-9} do not interfere. Salts react if their hydrolysis constants are larger than 10^{-9}.

To determine the total acid or strong base number, the sample is dissolved in a mixture of toluene and isopropyl alcohol containing a small amount of water, and the resulting single-phase solution is titrated at room temperature with standard alcoholic base, or alcoholic acid solution, respectively, to the end point indicated by the color change of the added p-naphtholbenzene solution (orange in acid and green-brown in base). To determine the strong acid number, a separate portion of the sample is extracted with hot water and the aqueous extract is titrated with potassium hydroxide solution using methyl orange as an indicator.

The acid number, strong acid number, or strong base number is calculated and reported as the number of milligrams of potassium hydroxide required to neutralize one gram of the sample and is identified by the notation "ASTM D 974-".

3. *Acid Number of Petroleum Products by Semimicro Color-Indicator Titration*

Test Method. ASTM D 3339 (Ref. 134)

This test method measures the acid number of oils obtained from laboratory oxidation tests using smaller amounts of fluid sample than the D664 and D974 test methods discussed previously. It has specific application in ASTM D 943 (See par. 3-4.6.2.2.), in which small aliquots of oil are removed periodically for testing.

To determine the acid number, a sample of the oil is dissolved in a solvent of toluene, isopropyl alcohol, and water. The solution is then titrated at room temperature in a nitrogen atmosphere with potassium hydroxide in isopropyl alcohol until the mixture turns a stable green color. The color is considered stable if it does not change back to a yellow or yellow-green color within 15 to 20 s. The acid number is reported as the quantity of potassium hydroxide required to titrate acids or salts present in the sample having hydrolysis constants larger than 10^{-9}. The acid number is expressed in mg of KOH per gram of sample. The result is reported as Acid number, (Test Method D3339) = (Result).

3-4.6.1.3 Carbon Residue

The carbon residue left after evaporation and pyrolysis of a liquid can give some indication of the relative coke-forming properties of the liquid. The methods presented were originally intended for the study of fuel oils and motor oils that came in contact with extremely hot surfaces. As the temperature ranges of hydraulic fluids increase, however, the carbon residue and the tendency of the hydraulic fluid to coke or form sludges becomes important to system design. Two general methods of determining carbon residue are currently used: the Conradson and the Ramsbottom.

Test Methods. Conradson-Federal Test Method 5001 (Ref. 137)
ASTM D 189 (Ref. 138)
Ramsbottom-Federal Test Method 5002 (Ref. 139)
ASTM D 524 (Ref. 140)

These methods describe procedures used to determine the carbon residue left after evaporation and pyrolysis of an oil. They are generally applicable to relatively nonvolatile petroleum products that partially decompose on distillation at atmospheric pressure. Petroleum products containing ash-forming constituents, such as detergents, have an erroneously high carbon residue that depends upon the amount of ash formed.

1. *Conradson Test.* In the Conradson test a weighed quantity of the sample fluid is placed in a crucible and subjected to destructive distillation. The residue undergoes cracking and coking reactions during a fixed period of severe heating. At the end of the heating period, the crucible with the residue is cooled in a desiccator and weighed. The residue remaining is calculated as a percentage of the original sample and reported as the Conradson carbon residue.

2. *Ramsbottom Test.* In the Ramsbottom test a sample of the liquid is placed in a glass coking bulb having a capillary opening. The bulb with the specimen is placed in a metal furnace at approximately 549°C (1020°F). The sample is quickly heated to the point at which all volatile matter evaporates out of the bulb with or without decomposition while the heavier residue remaining in the bulb undergoes cracking and coking reactions. After a specified heating

Downloaded from http://www.everyspec.com

period, the bulb is removed from the bath, cooled in a desiccator, and weighed. The residue remaining is calculated as a percentage of the original sample and reported as the Ramsbottom carbon residue.

3-4.6.2 Oxidation Stability Tests

A large number of oxidation tests have been proposed, and all of these tests involve exposing the liquid to air or oxygen at elevated temperatures in order to accelerate the rate of oxidation. Since certain metals, such as iron or copper, are catalysts for oxidation, many test procedures involve the use of these metals. Two general techniques are used to indicate oxidation stability. The first involves measuring changes in liquid properties caused by the test. The second involves determining the amount of oxygen that has been removed from the air or the system. Relating the oxygen consumed to time gives the rate of oxidation. A few of the more widely accepted procedures are discussed here.

3-4.6.2.1 Oxidation-Corrosion Test

A discussion of two test methods follows:

1. Test Methods. Federal Test Method No. 5308 (Ref. 141)
   ASTM D 4636 (Ref. 143)

Probably the most widely used test for oxidation stability is the oxidation-corrosion test. This test method is used to test hydraulic fluids and other highly refined oils to determine their ability to resist oxidation and their tendency to corrode various metals. The test is also used as an accelerated long-term storage test.

Five different metal strips—one each of copper, steel, aluminum alloy, magnesium alloy, and cadmium-plated steel—are carefully cleaned, polished, and weighed. These metal strips are assembled in a pattern, tied together, and the assembly immersed in a sample of the oil. The oil is held at 120°C (250°F) for 168 h while air is bubbled through it. The strips are then removed, cleaned, and weighed, and the results are recorded as changes in weight per unit area of surface. Each strip is examined for any evidence of pitting, etching, or stains. In addition, the oil sample is examined before and after the test, and percent changes of neutralization number and viscosity are determined. Several variations of the test are used with different metal specimens, and/or test temperatures, and/or test times.

2. Test Methods. Federal Test Method 5307 (Ref. 142)
   ASTM D 4636 (Ref. 143)

This test method is very similar to Federal Test Method 5308 discussed previously. The test method includes a standard test procedure and two alternative procedures. The standard procedure uses washer-shaped specimens of titanium, magnesium, low-carbon steel, M50 steel, bronze, silver, and aluminum. This test uses 200 mL of test oil at selected temperatures ranging from 100 to 360°C (212 to 680°F). Oil samples are withdrawn and checked for changes in total acid number and viscosity periodically throughout the test. Corrosiveness of the oil is determined by loss in metal weight and microscopic examinations of the metal surfaces.

Alternative Procedure 1 uses the same type of metal specimens, but there is periodic oil sampling. The effects of oxidation are determined by comparing the final viscosity and acid number with the values before the test began.

Alternative Procedure 2 uses square metal specimens of copper, steel, aluminum, magnesium, and cadmium. Other metals may be tested if desired. There is no periodic sampling of the oil, so only the initial and final viscosities and acid numbers are compared.

The results of the tests are reported as the change in viscosity of the initial and final samples at 40 and 100°C (104 and 212°F), the initial and final total acid numbers, the weight change of each specimen, the appearance of each specimen, and the volume percent of sludge in the oil.

3-4.6.2.2 Oxidation Characteristics of Inhibited Mineral Oils

Test Method. ASTM D 943 (Ref. 144)

This test was developed to measure the effectiveness of antioxidant additives and to predict lubricant life. The procedure is actually a combination oxidation and hydrolytic stability test. Given amounts of the test liquid and water are placed in a large test tube, and a coil of iron wire and copper wire wound together in intimate contact is completely immersed in the test mixture. The test tube is placed in a bath at 95°C (203°F), and air at 3 L/h (0.79 gal/h) is bubbled through the test liquid/water mixture. The test liquid is sampled periodically to determine changes in acidity. A rapidly increasing acidity is taken as the end point of the test. The formation of sludge deposits on the metal coil can also be used to rate liquid stability. This procedure is particularly useful in determining the effectiveness of inhibitors in petroleum products used as steam turbine lubricants. Since many of these same materials are used as hydraulic fluids, the results of the steam turbine oxidation test are often considered in the selection of petroleum-type hydraulic fluids.

3-4.6.2.3 Evaporation Tests

Evaporation loss tests, described in par. 3-2.8.3, provide a measure of oxidation stability. These tests are primarily designed to measure the liquid volatility. However, if the temperature at which the test is carried out is high enough that oxidation occurs, the total weight loss experienced by the sample is a measure of the oxidation stability-volatility of the liquid.

3-4.6.2.4 Thin Film Oxidation Tests

A frequent occurrence in the operation of hydraulic systems is exposure to the atmosphere of a large area of metal surface covered by a thin film of hydraulic fluid. One such

Downloaded from http://www.everyspec.com

case is the extension of an actuator rod. Normal oxidation tests involve the use of relatively small surface-to-liquid ratios. A test used to determine oxidation properties at large surface-to-liquid ratios has been developed by the Pennsylvania State University Petroleum Refining Laboratory (Ref. 4). The procedure involves passing air and oxygen through a tube containing a large amount of metal chain and a small amount of liquid. Changes in liquid properties occurring after a specific test period are measured.

3-4.6.2.5 Dornte Oxidation Test

The Dornte Oxidation Test is one of the more common absorption-type oxidation tests for hydraulic fluids. Oxygen is circulated through the liquid, which is maintained under specified conditions. The total amount of oxygen absorbed is replaced to maintain the ratio of oxygen-to-liquid. The amount of oxygen that must be added to the system to maintain a desired pressure is a measure of that absorbed by the liquid. Test data are usually accumulated in terms of the amount of oxygen absorbed per unit time. Several variations of this test are detailed in Ref. 4.

3-4.6.3 Thermal Stability Tests

3-4.6.3.1 Penn State Bomb Test

The Penn State Bomb Test described in MIL-H-27601 (Ref. 145) is a widely used thermal stability test. A 20-mL sample of the liquid is placed in a stainless steel pressure cylinder with a 46-mL capacity. Catalysts of 12.7-mm (0.5-in.) diameter ball bearings of M-10 tool steel, 52100 steel, and naval bronze are also placed in the cylinder. The system is purged with nitrogen, sealed at atmospheric pressure, and the test begun. A temperature of 371°C (700°F) and a nitrogen pressure of 138 kPa (20 psi) are maintained for 6 h. Changes in viscosity, weight of the catalyst ball bearings, and acid or base number are reported as a measure of thermal stability of the liquid. Modifications of test temperature and test duration have been made to apply this test method to other fluids. A smaller scale version has been developed using a 2.0-mL sample and no metal catalyst. A stainless steel pressure vessel with a 5-mL capacity is used.

3-4.6.3.2 High-Temperature Test

Test Methods. Federal Test Method 2508 (Ref. 146)
ASTM D 2160 (Ref. 147)

This method describes a procedure used to determine the thermal stability of hydraulic fluids. The volatile decomposition products are held in continuous contact with the liquid during the test. The method does not measure the temperature at which oil fragments begin to form but will indicate bulk fragmentation occurring at a specified temperature and testing period.

A sample of the liquid is placed in a glass test cell, and the test cell and its contents are degassed to reduce oxidation and hydrolysis. The cell is then sealed under a vacuum and held at 260 to 316°C (500 to 600°F) for a period of 24 h (6 h for ASTM D 2160). The sample is observed during the test for evidence of insolubles, separation, or other changes. The test report includes (1) test temperature and duration, (2) visual appearance of the liquid and test cell, and (3) changes in neutralization number and viscosity of the liquid sample.

3-4.6.3.3 Sustained High-Temperature Stability Tests

There are no standardized test procedures for sustained high-temperature stability, as such. When a hydraulic fluid is being considered for use for long periods in a system operating near its upper temperature limit, however, normal thermal stability data may not be sufficient to indicate probable performance. In such instances it is common to test the liquid in a pump loop operating in a high-temperature environment. The pump-loop test procedures, discussed in pars. 3-2.5.3 (Shear Tests) or 3-3.8.2.1 and 3-3.8.2.2 (Lubrication Tests), are adaptable to high-temperature tests. The procedure is to enclose the loop in an oven and operate the test continuously at the desired temperature for 100 to 1000 h.

3-4.6.3.4 Low-Temperature Stability Test

Although the term "thermal stability" usually implies high-temperature stability, problems can occur with hydraulic fluid stability at low temperatures. Refer to par. 3-2.14 for a discussion of low-temperature stability and the various applicable tests.

3-4.6.4 Hydrolytic Stability Tests

Hydrolytic stability is determined by exposing the hydraulic fluid to water and measuring the changes that occur under various environmental conditions in selected properties of the liquid. A problem that often occurs in these tests is maintaining sufficient contact area between water and liquid to obtain a measurable reaction. Several of the more common tests are described.

3-4.6.4.1 Beverage Bottle Test

Test Methods. Federal Test Method 3457 (Ref. 148)
ASTM D 2619 (Ref. 149)

This method is used to determine the resistance of finished fluids to reaction when in contact with water. It consists of placing 75 g of fluid and 25 g of distilled water in a 200-mL (7-oz) beverage bottle. A cleaned and weighed copper strip is placed in the bottle and immersed in the fluid. The bottle is sealed and placed in a rotating mechanism that turns the bottle end over end at 5 rpm for 48 h in an oven at 93°C (200°F). The container is then removed from the oven, allowed to cool, and examined. Any insolubles formed are removed by centrifuging. The oil and water layers are separated and examined for changes in neutralization number, viscosity, and color. The weight change of the copper strip is

Downloaded from http://www.everyspec.com

also reported, and the physical condition of the strip is observed.

3-4.6.4.2 Other Hydrolytic Stability Tests

To determine the hydrolytic stability of fluids whose rate of hydrolysis is low or to predict hydrolytic stability in closed systems at high temperatures, a metal bomb must be used in place of the beverage bottle. Test procedures are quite similar to those used for the beverage bottle test except that no metal strip is added. Shaking assemblies, such as those available from the American Instrument Company, are well-suited for this test. These particular assemblies oscillate a high-temperature, high-pressure reaction vessel through a ±15-deg arc at 36 cycles per min. Reflux tests present another general technique. Procedures have not been standardized, but the essential features are that measured amounts of water and fluid are placed in a container and heated to the temperature at which the oil boils. The vapors are condensed, and refluxing is continued for a specified period of time. Changes in the fluid are determined, and the development of any acidity in the water layer is measured. These data are used as an indication of hydrolytic stability.

Simple storage tests are also a measure of hydrolytic stability. Measured quantities of fluid and water are placed in a bottle or other container, agitated, and stored at desired temperatures for a desired period of time. The samples are examined periodically to determine changes in appearance and, at the end of the test, are examined for the formation of insolubles, gels, or other physical and chemical changes. Various types of metals, elastomers, surface coatings, etc., can be added to the test containers to determine their effect.

3-4.6.5 Radiation Resistance Tests

The usual test methods used to determine radiation resistance of hydraulic fluids are based upon radiation exposure followed by determination of changes in the liquid. In most of these tests fluid properties, such as viscosity and neutralization number, are measured before the test. The fluid is subjected to a given amount of radiation exposure and the properties are measured after exposure. Changes can vary from complete destruction of the fluids and loss of structural integrity to minor variations in various properties. This is a static test method that gives considerable information on performance of fluids exposed to radiation.

Bolt (Ref. 127) refers to several test methods, although none are currently standardized. In one method fluids are held at 316°C (600°F) and exposed to various levels of radiation. The percentage of gamma rays and fast neutrons is varied by using different absorbers. In another procedure fluid samples are exposed to 1.9×10^9 rad in a reactor. For separate tests the fluid temperatures are varied between 18 and 220°C (64 to 428°F) with air present. In yet another procedure fluids are exposed to 5×10^8 rad under helium at temperatures ranging from 27 to 204°C (80 to 400°F).

3-5 CORROSIVENESS

In its broadest meaning corrosion refers to the deterioration of a metallic surface by chemical or electrochemical action. The corrosiveness of a hydraulic fluid relates to its tendency to promote or encourage corrosion in a hydraulic system. It is obviously desirable to maintain the corrosiveness of a hydraulic fluid at as low a level as possible.

The corrosiveness of a hydraulic fluid, usually at its lowest value when the fluid is new and unused, can be affected by a number of variables, such as temperature, load, moisture, chemical nature of the liquid, oxidation stability, the type and amount of degradative products formed, the dispersion of the products in the system, and numerous other variables. Only a few of these variables, however, are parameters of the liquid. Variables, such as temperature, load, and exposure to moisture, are mechanical factors of the system and can—through proper system design and the use of the correct hydraulic fluid—be controlled within a range of acceptable limits. Fluid parameters—those variables that relate to the corrosiveness of the liquid, such as chemical nature and oxidation stability—are fundamental properties of the liquid and cannot be varied except by the use of additives. Additives are discussed in Chapter 5.

3-5.1 CHEMICAL CORROSION

Chemical corrosion is probably the most prevalent type of corrosion that exists in fluid power systems. Although chemical corrosion starts rapidly, it may often become slow as soon as a layer of corrosion products forms on the metallic surface. If, however, the layer of corrosion products is being continually cracked or removed, corrosion continues at its original rate. Of the various types of corrosion, the two that occur in most systems are oxidation and acidic corrosion. Oxidation is limited to the surface of metals and its results are exhibited by an accumulation of metal oxides. Acidic corrosion refers to the deterioration of the metallic surface caused by the metal actually being dissolved by acids and washed away, leaving a pitted surface.

Rusting is the oxidation of the base iron in metal structures. The oxidation is usually catalyzed, or increased, by the presence of dissolved air and water in the system liquid. Theoretically, prevention of oxidation is the easiest corrosion action to control. Simple exclusion of air and moisture from the system could eliminate rusting. However, because it is almost impossible to exclude completely all air and moisture from a hydraulic system, numerous additives are used as oxidation and corrosion inhibitors. This is discussed in detail in Chapter 5.

Oxidation of the hydraulic fluids while in use produces acid-type products that can rapidly increase the corrosiveness of the fluid. It is, therefore, desirable to maintain a high level of oxidation stability in the fluid. There are numerous inhibitors that can reduce the acid corrosion tendencies of a hydraulic fluid. A discussion of the various corrosion inhibitors and their mode of action is presented in Chapter 5.

Downloaded from http://www.everyspec.com

The corrosive tendencies of a liquid frequently increase in the presence of various metals that act as catalysts. Copper is a common example. Many liquids become much more corrosive than usual in the presence of copper; thus several of the test procedures used to determine the corrosion properties of liquids use a copper catalyst. The problem is basically one of liquid-metal compatibility and is discussed in par. 6-2.1.

3-5.2 ELECTROCHEMICAL CORROSION

Almost any chemical reaction can be called electrochemical, but the term is usually limited to situations with spatially separated anodic and cathodic areas so that corrosion is accomplished by electric current flowing for a perceptible distance through the metal. It is not necessary to have two metals for electrochemical corrosion. All that is needed is the metal, a material of a different electric potential, and a conductance path between them. A corrosion product or liquid can be the source of the second electric potential (Ref. 150).

Galvanic corrosion is probably the most common form of electrochemical corrosion. Galvanic corrosion occurs when dissimilar metals in electrical contact with each other are exposed to an electrolyte. A current, called a galvanic current, then flows from one metal to the other. Galvanic corrosion is that part of the resulting corrosion of the anodic (positive) member of the metal couple.

Many hydraulic fluids are not good electrolytes when new and do not promote galvanic or electrochemical corrosion. However, contaminants that enter or form in the fluid during use and some types of additives may give the liquid electrolytic properties. Several precautions can be taken to reduce the electrochemical action of the galvanic couple and reduce the corrosion, e.g., using similar metals, insulating the metals, or eliminating the electrolyte. These steps are frequently impractical and other precautions, such as using corrosion inhibitors, must be taken.

3-5.3 CORROSIVENESS TESTS

Numerous test methods have been proposed and developed to determine the corrosive properties of liquids. Although most of the tests are universal in that they are designed for any type of liquid or lubricant, certain tests have been developed specifically for gear lubricants, for hydraulic fluids, or for other special liquids. These corrosiveness tests fall into three general categories: (1) metal-liquid tests in which a metal surface is exposed to the liquid for a given length of time at given conditions, (2) fog or humidity cabinet tests in which a strip of metal is coated with the liquid and exposed to extremely humid conditions for a predetermined period of time, and (3) engine tests in which the liquid is tested in a gearbox of an engine under controlled conditions.

3-5.3.1 Metal-Liquid Corrosiveness Tests

A large number of metal-liquid corrosiveness tests have been developed. Most of these tests are similar in that a metal sample is exposed to the liquid under controlled conditions. The metal is then examined for evidence of corrosion and the liquid is examined for changes in properties. These tests can also be considered liquid-metal compatibility tests. Two of the more common types of tests are described and are noted in Table 3-12 along with other tests of the same type. The acceptable corrosion limits for several military specification hydraulic fluids as determined by the oxidation-corrosion test (or variations) are given in Table 3-13.

1. *Oxidation-Corrosion Test*

   Test Methods. Federal Test Method 5308 (Ref. 141)
   ASTM D 4636 (Ref. 143)

   These tests are described in detail in par. 3-4.6.2.1.

2. *Copper Corrosion (Copper Strip) Test*

   Test Methods. Federal Test Method 5325 (Ref. 151)
   ASTM D 130 (Ref. 152)

This method describes a procedure used to determine the corrosiveness to copper of fuels, gasolines, cleaners, fuel oils, and other petroleum products. A polished copper strip is immersed in a 30-mL sample of the liquid and heated at the temperature (normally 50 or 100°C (122 or 212°F)) and for the time (normally 2 to 3 h) called for in the liquid specification. At the completion of the test period, the copper strip is removed and compared with a series of copper strip corrosion standards (available from ASTM). The results are reported as the number of the corrosion standard with which the test strip compares. Standards vary from a No. 1a (slight tarnish) to No. 4c (corroded glassy or jet black).

3-5.3.2 Humidity-Type Corrosiveness Tests

FTM 4001.3, ASTM D 1748, and the corrosion rate evaluation procedure (CREP) are described briefly. A table provides a quick reference for several other tests.

Several corrosiveness test procedures using a fog or humidity cabinet have been developed. The tests are similar in that a metal specimen is coated with the test liquid and placed in a cabinet with constant, high humidity. In some instances the fog is treated with various chemicals to simulate actual conditions, i.e., sodium chloride added to simulate seawater. These tests are not basically corrosiveness tests; they are primarily intended to determine the protective qualities of a liquid against corrosion in a corrosive environment. Three of the more common test procedures are described below and listed in Table 3-14 with other tests of the same type.

1. *Rust Protection by Metal Preservatives in the Humidity Cabinet*

   Test Methods. ASTM D 1748 (Ref. 157)
   Federal Test Method 5310.2 (Ref. 158)

Downloaded from http://www.everyspec.com

TABLE 3-12. LIQUID-METAL CORROSIVENESS TEST METHODS

TEST METHOD	TITLE	PROCEDURE
FTM 5308 (Ref. 141) ASTM D 4636 (Ref. 143)	Corrosiveness and Oxidation Stability of Light Oils (Metal Squares)	Five metal strips—copper, steel, aluminum, magnesium, cadmium-plated steel—immersed in test liquid for 168 h at 121°C (250°F) with air agitation
FTM 5325 (Ref. 151) ASTM D 130 (Ref. 152)	Copper Corrosion by Petroleum Products (Copper Strip Test)	Polished copper strip immersed in test liquid for 2 to 3 h at 50°C (122°F) or 100°C (212°F)
FTM 5305 (Ref. 153)	Corrosiveness of Lubricants at 232°C (450°F)	Copper and silver strip immersed in test liquid for 50 h at 232°C (450°F)
FTM 5321 (Ref. 154)	Corrosion of Lead by Lubricating Oils	Strips of lead and copper rotated in test liquid for 1 h at 163°C (325°F) and air bubbled through liquid
FTM 4011 (Ref. 155) ASTM D 655 (Ref. 156)	Rust-Preventing Characteristics of Steam Turbine Oil in the Presence of Water	Cylindrical steel specimen immersed in test liquid-water mixture for 24 h at 60°C (140°F)
FTM 3457 (Ref. 148) ASTM D 2619 (Ref. 149)	Hydrolytic Stability (Beverage Bottle Test)	Copper strip immersed in water-test liquid mixture for 48 h at 93°C (200°F)

Although these methods are specifically intended for metal preservatives, they can be used for other fluids as well. In the test, steel coupons are prepared to a prescribed surface finish, dipped in the test oil, and suspended in the humidity cabinet. The cabinet temperature is maintained at 48.9°C (120°F). The test may be continued for a predetermined number of hours or until failure. One rust spot larger than 1 mm in diameter or four or more rust spots of any size constitute failure.

2. *Protection-Salt Spray*

Test Method. Federal Test Method 4001 (Ref. 159)

This method is intended to determine the corrosion resistance of a fluid in the presence of a salt-type atmosphere. Steel test specimens are coated with the test fluid and suspended in a fog chamber. The fog consists of an atomized spray of a solution of either 20 ± 0.05 parts or 5 ± 0.05 parts, depending on the process specification by weight, sodium chloride and 80 ± 0.05 or 95 ± 0.05 parts distilled water. The temperature in the chamber is kept between 33 and 36°C (92 and 97°F). The test shall be conducted for as long as required by the liquid specification. Criteria used to determine whether the candidate liquid passes or fails the test are to be supplied by the liquid specification.

3. *Corrosion Rate Equivalent Procedure (CREP) for CTFE Hydraulic Fluids*

Test Method. MIL-H-53119(ME) (Ref. 160)

In this procedure, which is a part of the specification for CTFE, separate precleaned and preweighed metal coupons are coated with the test oil formulation, a corrosion-inhibited nonflammable fluid (formulated CTFE), and an uninhibited CTFE base stock. The last two are reference fluids. The three coupons are suspended in the 92 ± 1°C (198 ± 2°F) vapor phase of distilled water for 1 h. The coupons are then cleaned, dried, and reweighed to five decimal places to determine the weight change due to corrosive attack. The coupons are also visually examined. Duplicate tests are run simultaneously in identical apparatus. A weight change of greater than 20 mg or a visual rating of less than 8 is considered a failure. The visual rating is based on a rating of 10 for a standard sample of inhibited CTFE to 0 for the uninhibited base stock. Although developed for CTFE, this procedure can be used for other hydraulic fluids.

3-5.3.3 Gearbox and Engine Corrosiveness Tests

Several tests have been developed to evaluate the corrosiveness of lubricating oils in engines and gearboxes. These tests were not developed for hydraulic fluids and are not often used in their valuation. However, one such test, Federal Test Method 5326 (Ref. 162), can be used to provide some information about the corrosion-preventive characteristics of hydraulic fluids. In this test distilled water is added to the fluid in a Spicer differential assembly. The unit is operated at a test temperature of 82°C (180°F) and a speed of 2500 rpm for 4 h. The unit is then stored for the period of time designated in the fluid specification. At the end of that time the unit is opened and examined for corrosion.

TABLE 3-13. OXIDATION-CORROSION LIMITS OF SEVERAL MILITARY HYDRAULIC FLUID SPECIFICATIONS

MILITARY SPECIFICATION	TEST METHOD OR TEST DESCRIPTION	FLUID CHANGES		METAL CHANGES						
				Weight Change, mg/cm²					Pitting, Etching, Visible Corrosion at 20X	Copper Corrosion Allowed
		Viscosity Change, %	Neutralization Number Change	Copper	Steel	Aluminum	Magnesium	Cadmium Plated Steel		
PETROLEUM HYDRAULIC FLUIDS										
MIL-H-5606F	ASTM D 4636 168 h at 135°C	−5, +20 at 40°C (104°F)	< 0.2	± 0.6	± 0.2	± 0.2	± 0.2	± 0.2	None	< ASTM D 130 No. 3
MIL-H-6083E	FTM 5308	−5, +20 at 40°C (104°F)	< 0.3	±0.6	± 0.2	± 0.2	± 0.2	± 0.2	None	Slight Etching
MIL-H-27601A	FTM 5308 48 h at 175°C (347°F)	−5, +20 at 40°C (104°F)	< 0.2 (Total)	± 0.6	± 0.2		(± 0.2 for Silver)		—	—
SYNTHETIC HYDROCARBON										
MIL-H-83282C	FTM 5308	± 10% at 40°C (104°F)	< 0.2	± 0.6	± 0.2	± 0.2	± 0.2	± 0.2	None	< ASTM D 130 No. 3
MIL-H-46170B	FTM 5308	± 10% at 40°C (104°F)	< 0.3	± 0.6	± 0.2	± 0.2	± 0.2	± 0.2	None	< ASTM D 130 No. 2
MIL-H-87257	ASTM D 4636 168 h at 135°C (275°F)	—	< 0.2	± 0.6	± 0.2	±0.2	± 0.2	± 0.2	None	< ASTM D 130 No. 3
PHOSPHATE ESTER										
MIL-H-19457D	168 h at 54°C (130°F)	—	—	—	± 0.2	± 0.2	(± 0.2 for Brass and Zinc)		None	—
CTFE										
MIL-H-53119	FTM 5308	± 5% at 40°C (104°F)	< 0.2	± 0.6	± 0.2	± 0.2	± 0.2	± 0.2	None	< ASTM D 130 No. 3a

Downloaded from http://www.everyspec.com

Downloaded from http://www.everyspec.com

TABLE 3-14. HUMIDITY TYPE CORROSIVENESS TESTS

TEST METHOD	PARAMETER	PROCEDURE
FTM 5310 (Ref. 158)	Rust Protection by Preservatives	Specially prepared steel plates are dipped in the test liquid and suspended in a humidity cabinet at 48.9°C (120°F) for a predetermined number of hours or until rust appears.
FTM 4001 (Ref. 159)	Corrosion Resistance in Salt-Spray Atmosphere	Specially prepared steel plates are dipped in the test fluid and suspended in a salt fog in a humidity cabinet at 33 to 36°C (92 to 97°F).
MIL-H-53119 (Ref. 160)	CTFE Corrosion Rate	One specially prepared metal coupon is coated with corrosion-inhibited CTFE; another coupon is coated with uninhibited CTFE. A third is coated with the test fluid. All three are suspended in a humidity cabinet at 92 ± 1°C (198 ± 2°F) for one h.
FTM 5322 (Ref. 161)	Corrosivity	A brass clip-on sheet disk is coated with the test liquid and placed in a humidity cabinet at 27°C (80°F) and 50% relative humidity for 10 days.

REFERENCES

1. "Viscosity", Lubrication **64**, No. 2, Texaco, Inc., White Plains, NY, 1978.
2. ISO 3448, *Industrial Liquid Lubricants—ISO Viscosity Classification*, International Organization for Standardization, Geneva, Switzerland, 1975.
3. ASTM D 2161-87, *Standard Practice for Conversion of Kinematic Viscosity to Saybolt Universal Viscosity or to Saybolt Furol Viscosity*, American Society for Testing and Materials, Philadelphia, PA, 1987.
4. Roger E. Hatton, *Introduction to Hydraulic Fluids*, Reinhold Publishing Corp, New York, NY, 1962.
5. ASTM D 445-86, *Standard Test Method for Kinematic Viscosity of Transparent and Opaque Liquids (and the Calculation of Dynamic Viscosity)*, American Society for Testing and Materials, Philadelphia, PA, 1986.
6. Federal Test Method No. 305.6, "Viscosity of Transparent and Opaque Liquids (Kinematic and Dynamic Viscosities)", Federal Test Method Standard 791C, *Methods of Testing Lubricants, Liquid Fuels, and Related Products*, 30 September 1986.
7. Federal Test Method No. 304.8, "Saybolt Viscosity", Federal Test Method Standard 791C, *Methods of Testing Lubricants, Liquid Fuels, and Related Products*, 30 September 1986.
8. Federal Test Method No. 9101.4, "Conversion of Kinematic Viscosity to Saybolt Universal Viscosity or to Saybolt Furol Viscosity", Federal Test Method Standard 791C, *Methods of Testing Lubricants, Liquid Fuels, and Related Products*, 30 September 1986.
9. ASTM D 2162-86, *Standard Test Method for Basic Calibration of Master Viscometers and Viscosity Oil Standards*, American Society for Testing and Materials, Philadelphia, PA, 1986.
10. ASTM D 446-89a, *Standard Specifications and Operating Instructions for Glass Capillary Kinematic Viscometers*, American Society for Testing and Materials, Philadelphia, PA, 1989.
11. ASTM D 341-89, *Standard Viscosity-Temperature Charts for Liquid Petroleum Products*, American Society for Testing and Materials, Philadelphia, PA, 1989.
12. Federal Test Method No. 9121.1, "Standard Viscosity-Temperature Charts for Liquid Petroleum Products", Federal Test Method Standard 791C, *Methods of Testing Lubricants, Liquid Fuels, and Related Products*, 30 September 1986.
13. ASTM D 2270-86, *Standard Practice for Calculating Viscosity Index From Kinematic Viscosity at 40 and 100°C*, American Society for Testing and Materials, Philadelphia, PA, 1987.
14. Federal Test Method No. 9111.3, "Calculating Viscosity Index", Federal Test Method Standard 791C, *Methods of Testing Lubricants, Liquid Fuels, and Related Products*, 30 September 1986.
15. R. C. Bowers and C. M. Murphy, *Status of Research on Lubricants, Friction, and Wear*, NRL Report No. 6466, Naval Research Laboratory, Washington, DC, 1967.
16. *ASTM Viscosity Index Tables Calculated from Kinematic Viscosities*, ASTM Data Series 39a, American Society for Testing and Materials, Philadelphia, PA, September 1965.
17. D. R. Wilson, *Effect of Extreme Conditions on the Behavior of Lubricants and Fluids*, AFML-TR-67-8,

Downloaded from http://www.everyspec.com

Part II, Air Force Materials Laboratory, Wright-Patterson Air Force Base, OH, January 1968.

18. *Pressure-Viscosity Reports*, Vols. 1 and 2, American Society of Mechanical Engineers, New York, NY, 1953.
19. E. E. Klaus, E. J. Tewksbury, and M. R. Fenske, *Fluids, Lubricants, Fuels, and Related Materials*, AFML-TDR-64-68, Air Force Materials Laboratory, Wright-Patterson Air Force Base, OH, February 1964.
20. E. E. Klaus, E. J. Tewksbury, and M. R. Fenske, *Fluids, Lubricants, Fuels, and Related Materials*, AFML-TR-65-112, Air Force Materials Laboratory, Wright-Patterson Air Force Base, OH, April 1965.
21. E. E. Klaus, E. J. Tewksbury, and M. R. Fenske, *Fluids, Lubricants, Fuels, and Related Materials*, AFML-TR-67-107, Part I, Air Force Materials Laboratory, Wright-Patterson Air Force Base, OH, March 1967.
22. E. E. Klaus and M. R. Fenske, "Some Viscosity Shear Characteristics of Lubricants", Lubrication Engineering 11 101-8 (March-April 1955).
23. ASTM D 4741-87, *Standard Test Method for Measuring Viscosity at High Temperature and High Shear Rate by Tapered-Plug Viscometer*, American Society for Testing and Materials, Philadelphia, PA, 1987.
24. M. Z. Fainman and W. B. Mackenzie, "The Characteristics and Performance of Specification MIL-H-5606 Hydraulic Fluid", Lubrication Engineering 22 234-40 (June 1966).
25. A. J. Gironda, E. B. Essing, and Bernard Rubin, *A Sonic Shear Method for Determination of Shear Breakdown of Hydraulic Fluids and Lubricating Oils*, WADC-TR-55-62, Air Force Materials Laboratory, Wright-Patterson Air Force Base, OH, March 1955.
26. R. L. LeMar, *Effect of Several Gas Atmospheres on Hydraulic Fluid Stability*, RIA Technical Report 67-1954, Rock Island Arsenal, Rock Island, IL, 1967.
27. *Determination of the Shear Stability of Non-Newtonian Liquids*, ASTM Special Technical Publication No. 182, American Society of Testing and Materials, Philadelphia, PA, 1955.
28. ASTM D 3945-86, *Standard Test Method for Shear Stability of Polymer-Containing Fluids Using a Diesel Injector Nozzle*, American Society for Testing and Materials, Philadelphia, PA, 1986.
29. Federal Test Method No. 201.9, "Pour Point", Federal Test Method Standard 791C, *Methods of Testing Lubricants, Liquid Fuels, and Related Products*, 30 September 1986.
30. ASTM D 97-87, *Standard Test Method for Pour Point of Petroleum Oils*, American Society for Testing and Materials, Philadelphia, PA, 1987.
31. ASTM D 2500-88, *Standard Test Method for Cloud Point of Petroleum Oils*, American Society for Testing and Materials, Philadelphia, PA, 1988.
32. Federal Test Method No. 203.1, "Pour Stability of Lubricating Oils", Federal Test Method Standard 791C, *Methods of Testing Lubricants, Liquid Fuels, and Related Products*, 30 September 1986.
33. Federal Test Method No. 204.1, "Diluted Pour Point", Federal Test Method Standard 791C, *Methods of Testing Lubricants, Liquid Fuels, and Related Products*, 30 September 1986.
34. Federal Test Method No. 202.1, "Cloud Intensity at Low Temperature", Federal Test Method Standard 791C, *Methods of Testing Lubricants, Liquid Fuels, and Related Products*, 30 September 1986.
35. ASTM D 1015-84, *Standard Test Method for Freezing Points of High-Purity Hydrocarbons*, American Society for Testing and Materials, Philadelphia, PA, 1984.
36. Federal Test Method No. 1103.7, "Flash and Fire Points by Cleveland Open Cup", Federal Test Method Standard 791C, *Methods of Testing Lubricants, Liquid Fuels, and Related Products*, 30 September 1986.
37. ASTM D 92-85, *Standard Test Method for Flash and Fire Points by Cleveland Open Cup*, American Society for Testing and Materials, Philadelphia, PA, 1985.
38. ISO 2592, *Petroleum Products—Determination of Flash and Fire Points—Cleveland Open Cup Method*, International Organization for Standardization, Geneva, Switzerland, 1973.
39. Federal Test Method No. 1101.8, "Flash Point by Tag Closed Tester", Federal Test Method Standard 791C, *Methods of Testing Lubricants, Liquid Fuels, and Related Products*, 30 September 1986.
40. ASTM D 56-87, *Standard Test Method for Flash Point by Tag Closed Tester*, American Society for Testing and Materials, Philadelphia, PA, 1987.
41. Federal Test Method No. 1102.11, "Flash Point by Pensky-Martens Closed Tester", Federal Test Method Standard 791C, *Methods of Testing Lubricants, Liquid Fuels, and Related Products*, 30 September 1986.
42. ASTM D 93-85, *Standard Test Method Flash Point by Pensky-Martens Closed Tester*, American Society for Testing and Materials, Philadelphia, PA, 1985.
43. ISO 2719, *Petroleum and Petroleum Products—Determination of Flash and Fire Points—Pensky-Martens Closed Open Cup Method*, International Organization for Standardization, Geneva, Switzerland, 1973.
44. Federal Test Method No. 1152.2, "Autoignition Temperature of Liquid Petroleum Products", Federal Test Method Standard 791C, *Methods of Testing Lubricants, Liquid Fuels, and Related Products*, 30 September 1986.

Downloaded from http://www.everyspec.com

45. ASTM E 659-78, *Standard Test Method for Autoignition Temperature of Liquid Chemicals*, American Society for Testing and Materials, Philadelphia, PA, 1978 (Reapproved 1984).

46. M. G. Zabetakis, A. G. Imhoff, and F. W. Lang, *Research on the Flammability Characteristics of Aircraft Hydraulic Fluids*, WADC-TR-57-151, Supplement 1, Air Force Materials Laboratory, Wright-Patterson Air Force Base, OH, 1958.

47. M. G. Zabetakis, G. S. Scott, A. G. Imhoff, and S. Lambiris, *Research on the Flammability Characteristics of Aircraft Hydraulic Fluids*, WADC-TR-57-151, Part II, Air Force Materials Laboratory, Wright-Patterson Air Force Base, OH, 1959.

48. Federal Test Method No. 352.1, "Effect of Evaporation on Flammability", Federal Test Method Standard 791C, *Methods of Testing Lubricants, Liquid Fuels, and Related Products*, 30 September 1986.

49. SAE AMS 3150 C, *Fluid, Hydraulic Fire Resistant*, Society of Automotive Engineers, Warrendale, PA, Revised 1960.

50. MIL-F-7100, *Fluid, Hydraulic, Nonflammable, Aircraft*, issued December 1950, cancelled February 1958.

51. *Fire Resistance of Hydraulic Fluids*, ASTM Special Technical Publication No. 406, American Society for Testing and Materials, Philadelphia, PA, 1966.

52. Federal Test Method No. 6052.1, "High-Temperature, High-Pressure Spray Ignition", Federal Test Method Standard 791C, *Methods of Testing Lubricants, Liquid Fuels, and Related Products*, 30 September 1986.

53. ASTM D 3119-83, *Standard Test Method for Mist Spray Flammability of Hydraulic Fluids*, American Society for Testing and Materials, Philadelphia, PA, 1983 (discontinued in 1990).

54. F. D. Norvelle, "A Discussion of Fluid Flammability Tests—Part I: Low-Pressure Spray Tests", The FRH Journal 4 (October 1983).

55. Federal Test Method No. 6053.1, "Manifold Ignition Test", Federal Test Method Standard 791C, *Methods of Testing Lubricants, Liquid Fuels, and Related Products*, 30 September 1986.

56. Wright & Weatherford, *A Technique for Evaluating Fuel and Hydraulic Fluid Ballistic Vulnerability*, AFLRL Report No. 89, US Army Fuels and Lubricating Research Laboratory, Southwest Research Institute, San Antonio, TX, December 1977.

57. MIL-H-19475D, *Hydraulic Fluid, Fire-Resistant, Nonneurotoxic*, 12 April 1989.

58. *ASTM Manual of Engine Test Methods for Rating Fuels*, American Society for Testing and Materials, Philedelphia, PA, 1965.

59. MIL-H-22072C(AS), *Hydraulic Fluid, Catapult*, NATO Code Number H-579, 5 March 1984.

60. MIL-H-83282C, *Hydraulic Fluid, Fire-Resistant, Synthetic Hydrocarbon Base, Aircraft*, 25 March 1986.

61. R. L. Adamczak, R. J. Benzing, and H Schwenker, Eds., *Proceedings of the AFML Hydraulic Fluids Conference*, AFML-TR-67-369, Air Force Materials Laboratory, Wright-Patterson Air Force Base, OH, December 1967.

62. ANSI B93.5M, *Practice for the Use of Fire-Resistant Fluids in Industrial Hydraulic Fluid Power Systems*, American National Standards Institute, New York, NY, 1979 (revised 1988).

63. ISO 6743/4, *Lubricants, Industrial Oils and Related Products (Class L)—Classification—Part 4: Family H (Hydraulic Systems)*, International Organization for Standardization, Geneva, Switzerland, 1982.

64. Constance Van Brocklin, *Information Comendium on Nonflammable Hydraulic Fluid and Design Requirements for Its Adoption*, Report 2486, US Army Belvoir Research, Development, and Engineering Center, Fort Belvoir, VA, February 1990.

65. Frank Yeaple, *Fluid Power Design Handbook*, Marcel Dekker, Inc., New York, NY, 1990.

66. ASTM D 2878-86, *Standard Test Method for Estimating Apparent Vapor Pressures and Molecular Weights of Lubricating Oils*, American Society for Testing and Materials, Philadelphia, PA, 1987.

67. ASTM D 2879-86, *Standard Test Method for Vapor Pressure—Temperature Relationship and Initial Decomposition Temperature of Liquids by Isoteniscope*, American Society for Testing and Materials, Philadelphia, PA, 1986.

68. ASTM D 323-82, *Standard Test Method for Vapor Pressure of Petroleum Products (Reid Method)*, American Society for Testing and Materials, Philadelphia, PA, 1982.

69. Federal Test Method No. 1201.6, "Vapor Pressure of Petroleum Products (Reid Method)", Federal Test Method Standard 791C, *Methods of Testing Lubricants, Liquid Fuels, and Related Products*, 30 September 1986.

70. ASTM D 86-82, *Standard Test Method for Distillation of Petroleum Products*, American Society for Testing and Materials, Philadelphia, PA, 1982.

71. ASTM D 2887-89, *Standard Test Method for Boiling Range Determination of Petroleum Fractions by Gas Chromatography*, American Society for Testing and Materials, Philadelphia, PA, 1989.

72. Federal Test Method No. 353.1, "Evaporation", Federal Test Method Standard 791C, *Methods of Testing Lubricants, Liquid Fuels, and Related Products*, 30 September 1986.

Downloaded from http://www.everyspec.com

73. Federal Test Method No. 351.2, "Evaporaton Loss of Lubricating Grease and Oils", Federal Test Method Standard 791C, *Methods of Testing Lubricants, Liquid Fuels, and Related Products*, 30 September 1986.

74. ASTM D 972-86, *Standard Test Method for Evaporation Loss of Lubricating Greases and Oils*, American Society for Testing and Materials, Philadelphia, PA, 1986.

75. Federal Test Method No. 350.2, *Evaporation Loss of Lubricating Greases and Oils (High Temperature)*, Federal Test Method Standard 791C, *Methods of Testing Lubricants, Liquid Fuels, and Related Products*, 30 September 1986.

76. H. C. Muffley, *Development of High-Density Recoil Oil*, RIA Report 58-516, Rock Island Arsenal, Rock Island, IL, 1958.

77. H. C. Muffley, *Density vs Viscosity as It Influences the Action of a Recoil Mechanism*, RIA Report 60-598, Rock Island Arsenal, Rock Island, IL, 1960.

78. *Special Study of Gun Mount, 105 mm, M68 for M1 Tanks With Nonflammable Hydraulic Fluid*, TECOM Project No. 1-WE-105-068-115, US Army Test and Evaluation Command, Aberdeen Proving Ground, MD, 18 June 1984.

79. John S. DiFucci, *Results of CTFE Fluid Test at Wright-Malta Corporation, Malta, New York*, Watervliet Arsenal Benet Laboratories Task No. 1, Wright-Malta Corporation, Malta, NY, 2 March 1988.

80. Federal Test Method No. 401.7, "API Gravity of Crude Petroleum and Petroleum Products (Hydrometer Method)", Federal Test Method Standard 791C, *Methods of Testing Lubricants, Liquid Fuels, and Related Products*, 30 September 1986.

81. ASTM D 287-82, *Standard Test Method for API Gravity of Crude Petroleum and Petroleum Products (Hydrometer Method)*, American Society for Testing and Materials, Philadelphia, PA, 1982 (reapproved 1987).

82. ASTM D 1250-80, *Standard Petroleum Measurement Tables*, American Society for Testing and Materials, Philadelphia, PA, 1980 (reapproved 1984).

83. Federal Test Method No. 402.2, "Density and Specific Gravity of Liquids by Lipkin Bicapillary Pyncnometer", Federal Test Method Standard 791C, *Methods of Testing Lubricants, Liquid Fuels, and Related Products*, 30 September 1986.

84. ASTM D 941-83, *Standard Test Method for Density and Relative Density (Specific Gravity) of Liquids by Lipkin Bicapillary Pyncnometer*, American Society for Testing and Materials, Philadelphia, PA, 1983.

85. ASTM D 1217-86, *Standard Test Method for Density and Relative Density (Specific Gravity) of Liquids by Bingham Pyncnometer*, American Society for Testing and Materials, Philadelphia, PA, 1986.

86. ASTM D 1298-85, *Standard Test Method for Density, Relative Density (Specific Gravity), or API Gravity of Crude Petroleum and Petroleum Products by Hydrometer Method*, American Society for Testing and Materials, Philadelphia, PA, 1985.

87. *Thermal Properties of Petroleum Products*, US Bureau of Standards Miscellaneous Publication No. 97, Washington, DC, 1929.

88. R. L. Leslie, "The Relation of Fluid Properties and High-Temperature Hydraulic Performance", ASLE Transactions 7, 180-5 (1964).

89. E. E. Lewis and H. Stern, *Design of Hydraulic Control Systems*, McGraw-Hill, Inc., New York, NY, 1962.

90. W. A. Wright, "Prediction of Bulk Moduli and Pressure-Volume-Temperature Data for Petroleum Oils," ASLE Transactions 10, 349-56 (1967).

91. J. A. Tichy and W. O. Winer, "A Correlation of Bulk Moduli and P-V-T Data for Silicone Fluids at Pressures up to 500,000 psig", ASLE Transactions 11, 338-44 (1968).

92. H. C. Muffley, *Foaming Characteristics of Recoil and Hydraulic Oils*, RIA Report 55-1686, Rock Island Arsenal, Rock Island, IL, 1955.

93. ASTM D 1401-84, *Standard Test Method for Water Separability of Petroleum and Synthetic Fluids*, American Society for Testing and Materials, Philadelphia, PA, 1984.

94. Federal Test Method No. 3201.7, "Emulsion (Petroleum and Petroleum-Like Products)", Federal Test Method Standard 791C, *Methods of Testing Lubricants, Liquid Fuels, and Related Products*, 30 September 1986.

95. Federal Test Method No. 3211.4, "Foaming Characteristics of Lubricating Oils", Federal Test Method Standard 791C, *Methods of Testing Lubricants, Liquid Fuels, and Related Products*, 30 September 1986.

96. ASTM D 892-89, *Standard Test Method for Foaming Characteristics of Lubricating Oils*, American Society for Testing and Materials, Philadelphia, PA, 1974, (reapproved 1984).

97. *Operating Manual AD-4000 Series Aire-Ometers*, Seaton-Wilson Division, BEI Electronics, Burbank, CA, 29 July 1988.

98. Federal Test Method No. 307.2, "Viscosity and Viscosity Change After Standing at –65°F (–53.9°C) of Aircraft Turbine Lubricants", Federal Test Method Standard 791C, *Methods of Testing Lubricants, Liquid Fuels, and Related Products*, 30 September 1986.

99. ASTM D 2532-87, *Standard Test Method for Viscosity and Viscosity Change After Standing at Low Temperature of Aircraft Turbine Lubricants*, American Society

Downloaded from http://www.everyspec.com

for Testing and Materials, Philadelphia, PA, 1987.

100. Federal Test Method No. 3458.1, "Low-Temperature Stability Test for Oil", Federal Test Method Standard 791C, *Methods of Testing Lubricants, Liquid Fuels, and Related Products*, 30 September 1986.

101. Federal Test Method No. 3459.1, "Low-Temperature Stability", Federal Test Method Standard 791C, *Methods of Testing Lubricants, Liquid Fuels, and Related Products*, 30 September 1986.

102. Federal Test Method No. 3004.6, "Trace Sediment in Lubricating Oils", Federal Test Method Standard 791C, *Methods of Testing Lubricants, Liquid Fuels, and Related Products*, 30 September 1986.

103. ASTM D 2273-86, *Standard Test Method for Trace Sediment in Lubricating Oils*, American Society for Testing and Materials, Philadelphia, PA, 1986.

104. H. H. Zuidema, *The Performance of Lubricating Oil*, Reinhold Publishing Corp., New York, NY, 1959.

105. ASTM D 4175-88, *Standard Terminology Relating to Petroleum, Petroleum Projects, and Lubricants*, American Society for Testing and Materials, Philadelphia, PA, 1988.

106. Federal Test Method No. 6505.1, "Load-Carrying Capacity of Universal Gear Lubricants by the Timkin Machine", Federal Test Method Standard 791C, *Methods of Testing Lubricants, Liquid Fuels, and Related Products*, 30 September 1986.

107. ASTM D 2782-88, *Standard Test Method for Measurement of Extreme-Pressure Properties of Lubricating Fluids (Timken Method)*, American Society for Testing and Materials, Philadelphia, PA, 1988.

108. Federal Test Method No. 3807.1, "Wear Life of Dry, Solid Film Lubricants", Federal Test Method Standard 791C, *Methods of Testing Lubricants, Liquid Fuels, and Related Products*, 30 September 1986.

109. Federal Test Method No. 3812.1, "Load-Carrying Capacity of Dry, Solid Film Lubricants", Federal Test Method Standard 791C, *Methods of Testing Lubricants, Liquid Fuels, and Related Products*, 30 September 1986.

110. ASTM D 3233-86, *Standard Test Method for Measurement of Extreme-Pressure Properties of Fluid Lubricants (Falex Pin and Vee Block Methods)*, American Society for Testing and Materials, Philadelphia, PA, 1986.

111. John G. Eleftherakis, "Gamma System Qualification—Part 1: Surface Contact Gamma", The TSF Journal **7**, 26-32, (1987).

112. ASTM D 2596-87, *Standard Test Method for Measurement of Extreme-Pressure Properties of Lubricating Grease (Four-Ball Method)*, American Society for Testing and Materials, Philadelphia, PA, 1987.

113. Federal Test Method No. 6514.2, "Wear-Preventive Characteristics of Lubricating Grease (Four-Ball Method)", Federal Test Method Standard 791C, *Methods of Testing Lubricants, Liquid Fuels, and Related Products*, 30 September 1986.

114. ASTM D 2266-86, *Standard Test Method for Wear-Preventive Characteristics of Lubricating Grease (Four-Ball Method)*, American Society for Testing and Materials, Philadelphia, PA, 1986.

115. ASTM D 4172-88, *Standard Test Method for Wear-Preventive Characteristics of Lubricating Fluid (Four-Ball Method)*, American Society for Testing and Materials, Philadelphia, PA, 1988.

116. ASTM D 2428-86, *Standard Test Method for Simulative Recirculating System Testing of Aerospace Hydraulic Fluids*, American Society for Testing and Materials, Philadelphia, PA, 1986.

117. ASTM D 2271-86, *Standard Test Method for Preliminary Examination of Hydraulic Fluids (Wear Test)*, American Society for Testing and Materials, Philadelphia, PA, 1986.

118. ASTM D 2882-83, *Standard Test Method for Indicating the Wear Characteristics of Petroleum and Nonpetroleum Hydraulic Fluids in a Constant Volume Vane Pump*, American Society for Testing and Materials, Philadelphia, PA, 1983.

119. Federal Test Method No. 6511.2, "Load-Carrying Capacity of Lubricating Oils at 204°C", Federal Test Method Standard 791C, *Methods of Testing Lubricants, Liquid Fuels, and Related Products*, 30 September 1986.

120. Federal Test Method No. 6512.3, "Load-Carrying Capacity of Steam Turbine Oils", Federal Test Method Standard 791C, *Methods of Testing Lubricants, Liquid Fuels, and Related Products*, 30 September 1986.

121. ASTM D 1947-83, *Standard Test Method for Load-Carrying Capacity of Petroleum Oil and Synthetic Fluid Gear Lubricants*, American Society for Testing and Materials, Philadelphia, PA, 1983.

122. Federal Test Method No. 6509.2, "Gear-Fatigue Characteristics of Aircraft Gas Turbine Lubricants at 204°C", Federal Test Method Standard 791C, *Methods of Testing Lubricants, Liquid Fuels, and Related Products*, 30 September 1986.

123. Federal Test Method No. 6508.2, "Load-Carrying Capacity of Lubricating Oils (Ryder Gear Machine)", Federal Test Method Standard 791C, *Methods of Testing Lubricants, Liquid Fuels, and Related Products*, 30 September 1986.

124. F. D. Yeaple, *Hydraulic and Pneumatic Power and Control*, McGraw-Hill, Inc., New York, NY, 1966.

125. R. E. Hatton, *Hydraulic Fluids for High-Altitude, High-Temperature Vehicles*, Paper 660661, Society of

Downloaded from http://www.everyspec.com

Automotive Engineers-American Society of Mechanical Engineers (SAE-ASME) Meeting, Los Angeles, CA, October 1966.

126. J. George Wills, *Lubrication Fundamentals*, Marcel Dekker, Inc., New York, NY, 1980.

127. Robert O. Bolt and James C. Carrol, *Radiation Effects on Organic Materials*, Academic Press, New York, NY, 1963.

128. ASTM D 91-87, *Standard Test Method for Precipitation Number of Lubricating Oils*, American Society for Testing and Materials, Philadelphia, PA, 1987.

129. ASTM D 482-87, *Standard Test Method for Ash from Petroleum Products*, American Society for Testing and Materials, Philadelphia, PA, 1987.

130. Federal Test Method No. 102.7, "ASTM Color of Petroleum Products", Federal Test Method Standard 791C, *Methods of Testing Lubricants, Liquid Fuels, and Related Products*, 30 September 1986.

131. ASTM D 1500-87, *Standard Test Method for ASTM Color of Petroleum Products (ASTM Color Scale)*, American Society for Testing and Materials, Philadelphia, PA, 1987.

132. ASTM D 664-87, *Standard Test Method for Acid Number of Petroleum Products by Potentiometric Titration*, American Society for Testing and Materials, Philadelphia, PA, 1987.

133. ASTM D 974-87, *Standard Test Method for Acid and Base Number by Color-Indicator Titration*, American Society for Testing and Materials, Philadelphia, PA, 1987.

134. ASTM D 3339-87, *Standard Test Method for Acid Number of Petroleum Products by Semi-Micro Color-Indicator Titration*, American Society for Testing and Materials, Philadelphia, PA, 1987.

135. Federal Test Method No. 5102.1, "Acid and Base Number by Extraction, (Color-Indicator Titration)", Federal Test Method Standard 791C, *Methods of Testing Lubricants, Liquid Fuels, and Related Products*, 30 September 1986.

136. Federal Test Method No. 5105.5, "Neutralization Number by Color-Indicator Titration", Federal Test Method Standard 791C, *Methods of Testing Lubricants, Liquid Fuels, and Related Products*, 30 September 1986.

137. Federal Test Method No. 5001.11, "Conradson Carbon Residue of Petroleum Products", Federal Test Method Standard 791C, *Methods of Testing Lubricants, Liquid Fuels, and Related Products*, 30 September 1986.

138. ASTM D 189-81, *Standard Test Method for Conradson Carbon Residue of Petroleum Products*, American Society for Testing and Materials, Philadelphia, PA, 1981.

139. Federal Test Method No. 5002.7, "Ramsbottom Carbon Residue of Petroleum Products", Federal Test Method Standard 791C, *Methods of Testing Lubricants, Liquid Fuels, and Related Products*, 30 September 1986.

140. ASTM D 524-81, *Standard Test Method for Ramsbottom Carbon Residue of Petroleum Products*, American Society for Testing and Materials, Philadelphia, PA, 1981.

141. Federal Test Method No. 5308.7, "Corrosiveness and Oxidation Stability of Light Oils (Metal Squares)", Federal Test Method Standard 791C, *Methods of Testing Lubricants, Liquid Fuels, and Related Products*, 30 September 1986.

142. Federal Test Method No. 5307.2, "Corrosiveness and Oxidation Stability of Aircraft Turbine Engine Lubricants", Federal Test Method Standard 791C, *Methods of Testing Lubricants, Liquid Fuels, and Related Products*, 30 September 1986.

143. ASTM D 4636-86, *Standard Test Method for Corrosiveness and Oxidation Stability of Hydraulic Oils, Aircraft Turbine Engine Oils, and Other Highly Refined Oils*, American Society for Testing and Materials, Philadelphia, PA, 1986.

144. ASTM D 943-81, *Standard Test Method for Oxidation Characteristics of Inhibited Mineral Oils*, American Society for Testing and Materials, Philadelphia, PA, 1981.

145. MIL-H-27601A, *Hydraulic Fluid, Petroleum-Base, High-Temperature, Flight Vehicle*, 20 January 1989.

146. Federal Test Method No. 2508.1, "Thermal Stability of Lubricating and Hydraulic Fluids", Federal Test Method Standard 791C, *Methods of Testing Lubricants, Liquid Fuels, and Related Products*, 30 September 1986.

147. ASTM D 2160-85, *Standard Test Method for Thermal Stability of Hydraulic Fluids*, American Society for Testing and Materials, Philadelphia, PA, 1985.

148. Federal Test Method No. 3457.2, "Hydrolytic Stability", Federal Test Method Standard 791C, *Methods of Testing Lubricants, Liquid Fuels, and Related Products*, 30 September 1986.

149. ASTM D 2619-88, *Standard Test Method for Hydrolytic Stability of Hydraulic Fluids (Beverage Bottle Method)*, American Society for Testing and Materials, Philadelphia, PA, 1988.

150. H. H. Uhlig, *Corrosion Handbook*, John Wiley and Sons, Inc., New York, NY, 1948.

151. Federal Test Method No. 5325.4, "Copper Corrosion by Petroleum Products (Copper Strip Test)", Federal Test Method Standard 791C, *Methods of Testing Lubricants, Liquid Fuels, and Related Products*, 30 September 1986.

Downloaded from http://www.everyspec.com

152. ASTM D 130-83, *Standard Test Method for Detection of Copper Corrosion From Petroleum Products by the Copper Strip Tarnish Test*, American Society for Testing and Materials, Philadelphia, PA, 1983.

153. Federal Test Method No. 5305.1, "Corrosiveness of Lubricants at 232°C (450°F)", Federal Test Method Standard 791C, *Methods of Testing Lubricants, Liquid Fuels, and Related Products*, 30 September 1986.

154. Federal Test Method No. 5321.2, "Corrosion of Lead by Lubricating Oils", Federal Test Method Standard 791C, *Methods of Testing Lubricants, Liquid Fuels, and Related Products*, 30 September 1986.

155. Federal Test Method 4011.4, "Rust-Preventing Characteristics of Steam Turbine Oil in the Presence of Water", Federal Test Method Standard 791C, *Methods of Testing Lubricants, Liquid Fuels, and Related Products*, 30 September 1986.

156. ASTM D 665-83, *Test Method for Rust-Preventing Characteristics of Inhibited Mineral Oil in the Presence of Water*, American Society for Testing and Materials, Philadelphia, PA, 1983.

157. ASTM D 1748-83, *Standard Test Method for Rust Protection by Metal Preservatives in the Humidity Cabinet*, American Society for Testing and Materials, Philadelphia, PA, 1983.

158. Federal Test Method No. 5310.2, "Rust Protection by Metal Preservatives in the Humidity Cabinet", Federal Test Method Standard 791C, *Methods of Testing Lubricants, Liquid Fuels, and Related Products*, 30 September 1986.

159. Federal Test Method No. 4001.3, "Corrosion Protection by Coatings: Salt-Spray (Fog) Test", Federal Test Method Standard 791C, *Methods of Testing Lubricants, Liquid Fuels, and Related Products*, 30 September 1986.

160. MIL-H-53119(ME), *Hydraulic Fluid, Nonflammable, Chlorotrifluoroethylene Base*, 1 March 1991.

161. Federal Test Method No. 5322.2, "Corrosiveness of Oil on a Bimetallic Couple", Federal Test Method Standard 791C, *Methods of Testing Lubricants, Liquid Fuels, and Related Products*, 30 September 1986.

162. Federal Test Method No. 5326.1, "Corrosion Protection by Gear Lubricants in the Presence of Moisture", Federal Test Method Standard 791C, *Methods of Testing Lubricants, Liquid Fuels, and Related Products*, 30 September 1986.

BIBLIOGRAPHY

E. Binns *et al.*, Nonflammable Fluid and 8000 psi Technology for Future Aircraft Hydraulic Systems, Paper No. 851909, Society of Automotive Engineers, Warrendale, PA, October 1985.

J. W. Blackwell and D. K. Walters, "Developments to Ensure Adequate Hydraulic Performance of Multifunctional Oils for Construction Equipment", Paper No. 16(2), Public Works Congress sponsored by the British Fluid Power Association, Bath, England, April 1987.

Conley and Jamison, *Development of a Nonflammable Hydraulic Fluid for Armored Vehicles: Part I*, BRDEC Report No. 2401, US Army Belvoir Research, Development, and Engineering Center, February 1984.

Davis *et al.*, *Fluids, Lubricants and Elastomer Materials*, Report No. AFWAL-TR-86-4083, Air Force Materials Laboratory, Wright-Patterson Air Force Base, OH, November 1986.

Davis *et al.*, *Fluids, Lubricants and Elastomer Materials*, Report No. AFWAL-TR-86-4089, Air Force Materials Laboratory, Wright-Patterson Air Force Base, OH, July 1988.

Davis *et al.*, *Fluids, Lubricants and Elastomer Materials*, Report No. AFWAL-TR-86-4130, Air Force Materials Laboratory, Wright-Patterson Air Force Base, OH, November 1986.

Greene *et al.*, *Low Energy Consumption Hydraulic Techniques*, Report No. AFWAL-TR-88-2062, Air Force Materials Laboratory, Wright-Patterson Air Force Base, OH, August 1988.

J. A. Halat, *Hydraulic Pumps for High-Pressure Nonflammable Fluids*, Paper No. 851911, Society of Automotive Engineers, Warrendale, PA, October 1985.

Jeffery *et al.*, *Flight Worthiness of Fire-Resistant Hydraulic Systems*, Report No. AFWAL-TR-84-2085, Air Force Materials Laboratory, Wright-Patterson Air Force Base, OH, December 1984.

Kanakia *et al.*, *Standardization of Flammability Tests for Hydraulic Fluids*, AFLRL Report No. 181, US Army Fuels and Lubricants Research Laboratory, Southwest Research Institute, September 1983.

R. J. Kopko and R. L. Stambaugh, *Effect of VI Improver on the In-Service Viscosity of Hydraulic Fluids*, Paper No. 750693, Society of Automotive Engineers, Warrendale, PA, 1975.

H. H. Kouns, *Compatibility Test Report on 8000 psi Hydraulic Pump With AO2 (CTFE) Fluid*, Abex Report No. AER-883, Abex Corporation, Aerospace Division, Oxnard, CA, December 1983.

A. A. Krawetz *et al.*, *Thermochemical Behavior of Fluids, Lubricants, and Related Materials*, Report No. AFWAL-TR-85-4078, Air Force Materials Laboratory, Wright-Patterson Air Force Base, OH, 1985.

R. L. Leslie, *A Component Manufacturer Considers Hydraulic Oils for Mobile Service*, Paper No. 710722, Society of Automotive Engineers, Warrendale, PA, 1971.

M. P. Mahoney, *A Cost and Benefit Analysis of Hydraulic Fluid Systems for the Next Generation of Tactical Air-*

Downloaded from http://www.everyspec.com

craft, Air Force Institute of Technology, Wright-Patterson Air Force Base, OH, September 1987.

J. W. Martin, *Nonflammable Hydraulic System Seal Materials*, Report No. AFWAL-TR-84-4097, Air Force Materials Laboratory, Wright-Patterson Air Force Base, OH, September 1984.

J. G. Mills, *Lubrication Fundamentals*, Marcel Dekker, Inc., New York, NY, 1980.

M. Opachak, Ed. *Industrial Fluids: Controls, Concerns and Costs*, Society of Manufacturing Engineers, Dearborn, MI, 1982.

E. T. Raymond, *Design Guide for Aircraft Hydraulic Systems and Components for Use With Chlorotrifluoroethylene Nonflammable Hydraulic Fluids*, Report No. AFWAL-TR-80-2111, Air Force Materials Laboratory, Wright-Patterson Air Force Base, OH, March 1982.

In-Sik Rhee, *Evaluation of Evaporation Loss of Chlorotrifluoroethylene Fluid in an M60 Hydraulic Fluid Reservoir*, BRDEC Report No. 2417, US Army Belvoir Research, Development, and Engineering Center, Fort Belvoir, VA, December 1984.

C. E. Snyder *et al.*, *Air Force Nonflammable Hydraulic System Materials Development*, Paper No. 851908, Society of Automotive Engineers, Warrendale, PA, 1985.

C. E. Snyder *et al.*, "Determination of the Flammability Characteristics of Aerospace Hydraulic Fluids", Lubrication Engineering 37, 12, 705 (December 1981).

C. E. Snyder *et al.*, *Nonflammable Aircraft Hydraulic Systems Development*, Paper No. 821566, Society of Automotive Engineers, Warrendale, PA, 1982.

C. E. Snyder *et al.*, "Development and Evaluation of Nonflammable Aerospace (–54°C to 135°C) Hydraulic Fluids", Lubrication Engineering 38, 41 (January 1982).

R. L. Stambaugh and R. J. Kopko, *Behavior of Non-Newtonian Lubricants in High-Shear Rate Applications*, Paper No. 730487, Society of Automotive Engineers, Warrendale, PA, 1973.

R. L. Stambaugh *et al.*, *Hydraulic Pump Performance—A Basis for Fluid Viscosity Classification*, Paper No. 901633, Society of Automotive Engineers, Warrendale, PA, 1990.

C. Van Brocklin, *Information Compendium on Nonflammable Hydraulic Fluid and Design Requirements for its Adoption*, BRDEC Report 2486, US Army Belvoir Research, Development, and Engineering Center, Fort Belvoir, VA, February 1990.

Bernard R. Wright, *Discussion of Hydraulic Fluid Flammability Hazards*, AFLRL Report No. 95, US Army Fuels and Lubricants Research Laboratory, Southwest Research Institute, San Antonio, TX, December 1977.

Downloaded from http://www.everyspec.com

Downloaded from http://www.everyspec.com

CHAPTER 4
TYPES OF HYDRAULIC FLUIDS

This chapter concerns fluid categories and formulations. Fluids are compared by physical and chemical characteristics, fire resistance, and primary base stock (petroleum and nonpetroleum). Advantages and disadvantages of each type are discussed as well as typical applications. The final portion of the chapter contains tables that summarize the specifications of a number of fluids that are or could be used in hydraulic applications.

4-1 INTRODUCTION

The broad range of fluids described as hydraulic fluids can be best understood by categorizing them in their natural groupings. Many of these groupings or classifications are used throughout this chapter to aid the reader's understanding and assimilation of the various types of hydraulic fluids. Specific fluids within the Department of Defense (DoD) system or in industry often fall within more than one classification. Thus the reader should review each of the classifications presented before choosing a particular type of fluid for a particular application.

4-2 CLASSIFICATION OF HYDRAULIC FLUIDS

A wide range of liquids is available for use in hydraulic systems, and it is desirable to employ a classification system to assist those using hydraulic fluids to determine whether a liquid under consideration may function satisfactorily for a particular application. However, the task of selecting the most meaningful classification system is complicated by several factors. The areas of application of hydraulic systems and the type of equipment used have become so diverse that a classification useful in one area of application has little or no meaning in another. In addition, the increasing number and types of hydraulic fluids available add to the complexity of the task. In simple, low-performance hydraulic systems for which operating parameters are not severe, almost any liquid—water, water-base liquids, natural petroleum products, or the more sophisticated synthetic liquids—may be used with varying degrees of satisfaction. In areas in which the operating parameters are very severe, only a limited number of liquids may be considered and selection must be made with considerable care. In addition, there are liquids that are used primarily for purposes other than as hydraulic fluids but which have properties permitting them to be employed as hydraulic fluids in many applications.

Because of the wide and vastly different areas of application, it is not surprising that hydraulic fluids have been classified by many different systems based on their different characteristics, such as physical properties, chemical types, operating capabilities, usage, or specific applications. Although none of these groupings fully describe the properties of a hydraulic fluid, they are still used and assist in selecting fluids for application in specific areas.

4-2.1 CLASSIFICATION BY VISCOSITY

A classification based on viscosity ranges was one of the earliest methods used since petroleum products were the only hydraulic fluids widely used and viscosity was the most important property of this class of hydraulic fluids. The viscosity method is accepted and used as a means of classifying petroleum-base hydraulic fluids by the fluid manufacturers, the automotive industry, hydraulic component manufacturers, and hydraulic system designers and builders. Hydraulic fluids grouped in this manner are generally specified as suitable for use in a given application within a specified viscosity range. For nonpetroleum-base synthetic fluids, however, a classification based on viscosity range alone is not sufficient because of the importance of other properties.

4-2.2 CLASSIFICATION BY CHEMICAL PROPERTIES

Chemical classification of hydraulic fluids is extensively used by technical personnel, such as chemists and petroleum engineers. Chemical classification assists their predicting of the general characteristics of a new hydraulic fluid or developing a new hydraulic fluid for a specific application. In chemical compounds such as hydraulic fluids, the physical properties are dependent upon the compound structure; accordingly, the physical properties of two chemically similar fluids may not be the same. In fact, within a given class of hydraulic fluids in which the chemical properties are similar, the physical properties may vary greatly.

4-2.3 CLASSIFICATION BY OPERATING TEMPERATURES

When classifying hydraulic fluids according to operating characteristics, the most common operational parameter used is the operational temperature range of the hydraulic fluid. The aerospace industry and the Air Force are the principal users of the classification system based on operational temperatures and have established the following system types (Ref. 1):

1. Type I. −53.9 to 71.1°C (−65 to 160°F)
2. Type II. −53.9 to 135°C (−65 to 275°F).

Although this classification system has proved valuable and useful to some users, it does not identify other properties of the liquids, and one type may include several chemi-

Downloaded from http://www.everyspec.com

cal classes. Type I liquids include some petroleum hydrocarbons, phosphate esters, silicate esters, emulsions, water-base liquids, polyalkylene glycols, and halogenated hydrocarbons. Type II liquids include petroleum hydrocarbons, synthetic hydrocarbons (polyalphaolefins), and silicate esters; however, Type II fluids do not meet Type I requirements.

In general, there are commercial hydraulic fluids readily available that operate satisfactorily over the temperature ranges of Types I and II. Classification of hydraulic fluids and systems based solely on operational temperature ranges is not satisfactory in many cases, such as in industrial systems, since there is no need for a –53.9°C (–65°F) operational temperature requirement. It is important, however, that every hydraulic fluid have a definite operational temperature range established. Knowledge of these temperature limits is necessary in order to select a hydraulic fluid for a specific application.

4-2.4 CLASSIFICATION BY FLAMMABILITY

Hydraulic fluids may be classified as flammable, fire-resistant, and nonflammable. Flammable fluids tend to ignite readily and burn vigorously, even after the ignition source has been removed. Although their flammable characteristics vary somewhat, most all petroleum-base hydraulic oils fall into this category.

The definition of fire resistance is far from absolute, but generally, a fire-resistant fluid is one that is difficult to ignite and shows little tendency to propagate combustion, especially compared to petroleum-base fluids. As described in Chapter 3, there are four broad categories of fire-resistant fluids based on general formulation characteristics: (1) high-water-content fluids (HFA), (2) water-in-oil emulsions (HFB), (3) water-glycol fluids (HFC), and (4) synthetic fluids (HFD). The actual flammability characteristics of these fluids vary widely, but all of them will burn under certain conditions.

Although fire-resistant fluids provide definite advantages for specific applications, their general use and especially their retrofit into existing systems in which petroleum oils are being used require careful consideration. For example, the water content of the HFA and HFB fluids poses severe low- and high-temperature limitations. The HFA fluids generally have poor viscosity and lubricity characteristics. The HFC fluids have better low-temperature capabilities but still are limited to a relatively low maximum temperature to prevent evaporation of the water. These fluids also have some fairly restrictive compatibility problems with seal materials and many metals and paints. HFD fluids can and do provide a replacement for mineral oils with no reported compatibility problems.

A nonflammable fluid can be defined as one that will not ignite and will not support combustion. Water is the only truly nonflammable fluid that is currently available for use as a hydraulic fluid. There are, however, a number of obvious disadvantages to the application of pure water, such as temperature limits, evaporation, freezing, viscosity, lubricity, and corrosion. During the 1970s and 1980s, the Air Force, through the Wright Aeronautical Laboratories, worked to develop a nonflammable hydraulic fluid for military applications. The result of this effort was a fluid based on chlorotrifluoroethylene (CTFE). Although CTFE is not truly nonflammable in the classical sense of the term, when compared with flash point, fire point, autoignition temperature, gunfire resistance, horizontal flame propagation rate, and other flammability properties of existing fluids, it was termed a nonflammable hydraulic fluid. The reader is referred to Ref. 2 for detailed information on this fluid. Table 4-1 compares the specification property requirements of three typical fluids—one flammable, one fire-resistant, and one nonflammable.

One method used to "rate" the flammability of hydraulic fluids is to use a vulnerability rating as shown in Table 4-2 (Ref. 2). As is seen from this table, this rating assigns a point value up to 20 for the desirable characteristics of fluids with reduced flammability. Table 4-3 lists the actual values of their flammability properties for the fluids presented in Table 4-2.

Among the more recently developed methods used to assess the flammability characteristics of hydraulic fluids is the flame propagation rate test detailed in subpar. 3-2.7.4. This test has important implications for military applications because it provides an indication of how rapidly a fire will spread in noncombustible materials that have become saturated with hydraulic fluid. The use of fluids with a low propagation rate may often allow hydraulic fluid fires to be extinguished in time to save the equipment in which they are used, whereas a high propagation rate could allow a conflagration to develop before a fire could be extinguished.

4-2.5 CLASSIFICATION INTO PETROLEUM OR NONPETROLEUM HYDRAULIC FLUIDS

One of the most widely used classifications of hydraulic fluids is based on a separation into two general classes: petroleum and nonpetroleum. However, hydraulic fluids in the petroleum class may contain additives, even synthetic additives, without changing their classifications. The nonpetroleum and/or synthetic class of hydraulic fluids includes a considerably wider range of liquids since it contains those derived from nonpetroleum-base liquids as well as the synthetic-base liquids produced by major chemical reactions, although the base material for some of these liquids may be a petroleum product.

Downloaded from http://www.everyspec.com

TABLE 4-1. COMPARISON OF HYDRAULIC FLUID PROPERTY REQUIREMENTS (Ref. 2)

CHARACTERISTIC	MIL-H-6083	MIL-H-46170	MIL-H-53119
Viscosity, mm^2/s			
−54°C (−65.2°F), max	3,500	13,000*	1,200
−40°C (−40°F), max	800	2,600	NR
40°C (104°F)	13 (min)	19.5 (max)	2.9 (38°C)
100°C (212°F), min	4.3*	3.4	NR
135°C (275°F), min	NR	2.1*	0.60
Pour Point, °C (°F), max	−59 (−74.2)	−54 (−65.2)	−60 (−76)
Specific Gravity	0.86*	0.85*	1.7
Bulk Modulus, kPa (psi), min			
Isothermal Secant, 0 to 6.9×10^4 kPa	1.45×10^6	1.38×10^6	1.24×10^6
(0 to 10,000 psi) at 40°C (104°F)	(210,000)	(200,000)	(180,137)
Water, %, max	0.05	0.05	0.02
Total Acid Number, max	0.20	0.20	0.60
Evaporation Loss, %, max	70.0	5.0	NR
Vapor Pressure at 121°C (249.8°F) torr, max	NR	NR	100
Oxidation Corrosion Test**	Pass	Pass	Pass
Copper Corrosion, max	3a*	NR	3a*
Foaming Characteristics			
24°C (75.2°F), 5 min vol, mL	65	65	65
after 10 min, vol, mL	0	0	0
Swelling of Synthetic Rubber, %***	19.0-28.0	15.0-25.0	25.0-40.0
Lubricity, Wear Scar, Diameter, mm, max:			
10 kgf load	NR	0.30	NR
40 kgf load	1.0	0.65	0.8
Flash Point, °C (°F), min	82 (179.6)	218 (424.4)	None
Fire Point, °C (°F), min	NR	246 (474.8)	None
Autoignition Temperature, °C (°F), min	226* (438.8)	343 (649.4)	646* (1194.8)
High-Temperature, High-Pressure, Spray Ignition	Fail*	Pass	Pass*
Atomized Spray, Open Flame	Sustains*	Sustains*	Nonreactive*
Heat of Combustion, kJ/kg (kcal/kg), max	4.2×10^4 (10,050)*	4.1×10^4 (9820)*	5.5×10^3 (1325)*
Hot Manifold Ignition			
Steam, °C (°F), min	482* (899.6)	315* (599)	925 (1697)
Spray, °C (°F)	760* (1400)	704* (1299.2)	925* (1697)

(continued on next page)

Downloaded from http://www.everyspec.com

TABLE 4-1 (cont'd)

CHARACTERISTIC	MIL-H-6083	MIL-H-46170	MIL-H-53119
Ballistic Test (20 mm), HEIT	Mist Fireball,* Residual Burning	Mist Fireball*	No Ignition
Overall Vulnerability Rating (100) (Ref. 3)	32	49	100

Values given are specification requirements unless noted as "typical values" (*).
NR = Not required
HEIT = High-explosive incendiary tracer
* Typical values
** Federal Test Method Standard 791C, Method 5308
MIL-H-6083 and MIL-H-46170 are tested at 121°C (249.8°F).
MIL-H-53119 is tested at 135°C (275°F).
*** MIL-H-6083 and MIL-H-46170 are tested with NBR-L rubber.
MIL-H-53119 is tested with Viton GLT.
* 3a is a rating number taken from ASTM D 130. (A rating of 1a is for new, shiny, and bright copper.)

TABLE 4-2. COMPARISON OF HYDRAULIC FLUID FLAMMABILITY CHARACTERISTICS (Ref. 2)

CANDIDATE FLUID	FLASH POINT	AUTO-IGNITION	HOT-SURFACE IGNITION	MIST FLAMMABILITY	BALLISTIC VULNERABILITY	OVERALL VULNERABILITY RATING
Proposed US Army Standard	537.8°C (1000°F) = 20	648.9°C (1200°F) = 20	926.7°C (1700°F) = 20	No Mist Ignition = 20	No Mist Ignition = 20 No Pool Burning	100
MIL-H-6083	4	7	11	6	4	32
MIL-H-46170	9	11	7	10	12	49
MIL-H-53119	20	20	20	20	20	100
Freon E6.5*	20	20	20	20	20	100
MS-6**	11	13	10	12	14	60
Silicate Cluster	9	14	12	12	14	59

* This fluid is no longer commercially available.
** Navy experimental fluid

Downloaded from http://www.everyspec.com

TABLE 4-3. FLAMMABILITY AND IGNITION PROPERTIES OF QUALIFIED AND CANDIDATE HYDRAULIC FLUIDS, INCLUDING PROPOSED MINIMUM REQUIREMENTS (Ref. 3)

PROPERTY	MIL-H-6083	MIL-H-46170	MIL-H-53119	FREON E	MS-6	SILICATE CLUSTER (BASE FLUID)	FORMULATED SILICATE CLUSTER (OLIN H 21670)	AIR FORCE REQUIREMENTS (MINIMUM ACCEPTABLE)	PROPOSED ARMY TARGET REQUIREMENT
Autoignition, ASTM E 659, °C (°F)	226.7 (440)	357.2 (675)	643.3 (1190)	>704.4 (>1300)	398.9 (750)	435 (815)	426.7 (800)	>704.4 (>1300)	>648.9 (>1200)
Flash Point, ASTM D 92, °C (°F)	98.9 (210)	221.1 (430)	None	None	276.7 (530)	232.2 (450)	215.6 (420)	Not Required	Not Required
Fire Point, ASTM D 92, °C (°F)	110 (230)	254.4 (490)	None	None	343.3 (650)	251.7 (485)	232.2 (450)	Not Required	Not Required
Heat of Combustion, ASTM D 240, J/kg (Btu/lbm)	9982.2 (18,000)	9426.7 (17,000)	<2760 (<5000)	<2760 (<5000)	5537.8 (10,000)	<5537.8 (<10,000)	<5537.8 (<10,000)	<2760 (<5000)	<2760 (<5000)
Federal Standard 791B Method 6053 Manifold Ignition Test, °C (°F)	482.2 (900)	326.7 (620)	>926.7 (>1700)	>926.7 (>1700)	454.4 (850)	532.2 (990)	532.2 (990)	>926.7 (>1700)	>926.7 (>1700)
Federal Standard 791B Method 6052 High-Temperature, High-Pressure Spray Ignition	Fail	Pass	Pass	Pass	Pass	Pass	Pass	No Ignition	No Ignition
Ballistic Test-MERADCOM-AFLRL 20-mm HEIT Ballistic Procedure (Ref. 4)	Mist Fire-ball Residual Burning	Mist Fireball	No Ignition	No Ignition	Mist Fire-ball	Mist Fire-ball	Mist Fire-ball	No Ignition	No Ignition

NOTE: The data given in this table are from Ref. 3. The reader is advised that more recent versions of the test methods used exist. The data are presented exactly as given in Ref. 3 with SI units added.

Downloaded from http://www.everyspec.com

Downloaded from http://www.everyspec.com

4-2.6 CLASSIFICATION USED IN THIS HANDBOOK

The classification system used in this handbook combines the two classification systems described in pars. 4-2.2 and 4-2.5. The major division in this classification is petroleum-base and nonpetroleum and/or synthetic base. The latter category, however, is subdivided into chemical classes to aid identification of the wide range of properties of these hydraulic fluids.

Comparative or relative ratings of some of the general characteristics of the different classes of hydraulic fluids are shown in Table 4-4. It must be remembered that these ratings are only a general overall rating of the hydraulic fluid-base stock in each class, and wide variation may be found in specific liquids, particularly when additives are used.

Fire resistance is one of the characteristics to be considered in the selection of hydraulic fluids for military applications, especially for combat vehicles and aircraft. Included in Table 4-4 is a rating of the fire resistance of the various fluids. This is a difficult characteristic to categorize by a single listing because of the widely varying responses of the fluids to the different tests used to assess flammability characteristics. Thus the rating in the table is, of necessity, very generalized. The reader is referred to Tables 4-1, 4-2, and 4-3, as well as Refs. 2 and 3, for more definitive information on the fire resistance of individual fluids.

A description of the general properties and characteristics of the different classes of hydraulic fluids is given in subsequent paragraphs. Included at the end of the chapter are summaries and specification data of military or government specifications for typical liquids in the respective classes (See par. 4-6.). Requirements such as composition, usable temperature range, and typical usage are listed. There are specifications for hydraulic fluids other than the specifications listed. No attempt was made to list specifications for all liquids or oils that could be used as hydraulic fluids. The hydraulic fluids and lubricants selected are those most widely used or those representing the range of properties in specific classes of hydraulic fluids. It should be remembered that the specification values are only limiting values and that specific hydraulic fluids may differ considerably from these values. Also it should be noted that there are many nonspecification hydraulic fluids in all classes that may have properties equal or superior to the specification values.

4-3 PETROLEUM-BASE HYDRAULIC FLUIDS

Petroleum-base hydraulic fluids were among the first liquids used as hydraulic or power transmission fluids. The use of petroleum-base hydraulic fluids far surpasses that of all other classes including the synthetic and nonpetroleum classes. However, the wide variety of materials produced from different grades of crude oils and additives makes a summary of their properties difficult. In general, these fluids are considered to give outstanding performance, long life, good lubricating characteristics, and protection against rust, oxidation, corrosion, sludge, and foam formation. Of course, not all fluids in this class have all of these characteristics, but through selection of the proper grade of petroleum-base fluid and additives, the desired properties can usually be obtained. These fluids generally have a high viscosity index (VI) (approximately 100), which is frequently achieved by VI improvers so that they may be used over a wide temperature range. They have pour points as low as −67.8°C (−90°F) and flash points as high as 204.4°C (400°F). The fire points of these fluids generally range from <93.3 to 287.8°C (<200 to 550°F). Viscosity and viscosity-temperature characteristics vary over a wide range.

Most petroleum and many chemical manufacturing companies market a large number of petroleum-base hydraulic fluids, and these companies can provide information on specific properties or applications of their products. There are numerous military or government specifications covering different types of petroleum-base hydraulic fluids. Some of the more widely used liquids are described in the specification summaries and specification data sheets in par. 4-6.

4-4 NONPETROLEUM-BASE HYDRAULIC FLUIDS

4-4.1 PHOSPHATE ESTERS

Phosphoric acid esters, commonly referred to as phosphate esters, result from the insertion of phosphorus into organic molecules. The resulting compounds have properties that make them useful as hydraulic fluids. Many members of the class of chemicals called phosphate esters have excellent fire-resistant properties and sufficient stability to be used as hydraulic fluids. The fire-resistant property increases with decreasing molecular weight due to the decreasing ratio of carbon to phosphorus. Thus the less viscous phosphate esters have the highest spontaneous ignition temperatures. Phosphate esters are not nonflammable. They will burn if the source of energy is sufficiently great and the conditions are favorable (Ref. 4).

The oxidation stability of phosphate esters, in general, is fair to good. Under moderate conditions they are reasonably stable and can be improved with antioxidant additives. The thermal stability of phosphate esters varies widely, depending on the molecular structure of the specific ester. The viscosity-temperature characteristics of most phosphate esters are considered medium to good. In this respect they are equivalent to the better petroleum products. Viscosity of the phosphate ester hydraulic fluids is generally low, and on an equivalent volatility basis their viscosity characteristics are superior to those of petroleum-base products. Some phosphate esters can be used as a mild, extreme-pressure lubricant additive.

TABLE 4-4. CHARACTERISTICS OF HYDRAULIC FLUID BASE STOCKS

FLUID CLASS	VISCOSITY-TEMPERATURE	BULK MODULUS	VOLATILITY, VISCOSITY	THERMAL STABILITY	OXIDATIVE STABILITY	HYDROLYTIC STABILITY	FIRE RESISTANCE/ FLAMMABILITY	LUBRICATING ABILITY	ADDITIVE RESPONSE
I. Petroleum Base	G	G	P	G	F	E	P	F	E
II. Nonpetroleum Base									
A. Phosphate Esters	G	G	F	F	G	F	E	E	G
B. Silicate Esters	E	G	G	E	G	F	F	G	G
C. Organic Acid Esters	G	G	G	F	F	G	F	G	G
D. Polysiloxanes	E	P	E	G	F	E	F	P	P
E. Glycols	G	U	G	G	G	G	F	G	F
F. Polyoxy Glycols	G	U	G	G	G	G	F	G	F
G. Water Glycols	G	U	P	F	G	E	E	P	G
H. Emulsions	G	U	P	F	G	E	E	P	G
I. Polyalphaolefins	E	E	E	E	G	E	G	E	E
III. Experimental and Potential Fluids									
A. Polysiloxanes (Silicones)	E	P	E	E	G	E	F	F	F
B. Silahydrocarbons	E	G	E	E	G	E	E	G	G
C. Poly (chlorophenyl methyl) Siloxane	G	P	G	E	E	E	E	G	F
D. Chlorotrifluoroethylene (CTFE)	G	G	P	G	G	G	G	F	F
E. Perfluorinated Polymers	P	P	P	E	E	G	E	P	F
F. Perfluoropolyalkylether	E	P	E	E	E	E	E	F	F
G. Polyphenyl Ethers	F	E	G	E	E	E	E	F	F
H. Liquid Metals	G	E	F	E	P	P	P	F	U

E = excellent
G = good
F = fair
P = poor
U = unknown

Downloaded from http://www.everyspec.com

Downloaded from http://www.everyspec.com

The hydrolytic stability of phosphate esters is only fair. Hydrolysis of an ester results in reversion to starting compounds, acid and alcohol. In hydraulic equipment phosphate esters not only act as the power transfer medium, they also provide wear protection in pumps and valves. It is industry practice to add phosphorus compounds to petroleum products or to synthetic fluids as wear prevention agents. Thus it is natural that phosphate esters offer generally good wear properties. Phosphate ester fluids have a solvent action on most petroleum paints, enamels, and varnishes, but coatings are available that resist this action.

The military specification requirements for a typical phosphate-ester-base hydraulic fluid are shown in the summary and specification data sheets in par. 4-6.

4-4.2 SILICATE ESTERS

This class of hydraulic fluids has many properties similar to those of the phosphate esters because both are esters of inorganic acids. The principal differences between the two classes are in thermal stability, hydrolytic stability, lubricating characteristics, flammability, and viscosity-temperature relationships. Silicate esters have excellent thermal stability and, when properly inhibited, good oxidation stability. The silicate ester class of synthetic hydraulic fluids used in aerospace applications was developed for use in a liquid range from –54 to 204°C (–65 to 399°F). They have excellent viscosity-temperature characteristics, low pour point, low volatility, and fair lubricating properties. Silicate esters possess only fair oxidation stability and are similar to hydrocarbon hydraulic fluids in their susceptibility to attack by oxygen; however, it is easy to improve this property with the proper additives. The lubricating properties of silicate esters are only fair, but with careful selection of materials and operating conditions, these hydraulic fluids will provide some degree of lubrication. Generally, silicate esters are fairly good solvents. Although they do not dissolve many plastics or synthetic elastomers, they do tend to harden most elastomers after prolonged exposure at elevated temperatures. The major deficiency of this class of fluids is poor hydrolytic stability (resistance to hydrolysis) (Ref. 5).

In addition to their use as hydraulic fluids, the principal uses for silicate esters are as heat transfer fluids, dielectric coolants, and weapon lubricants. A typical military specification for silicate ester fluid is given in the summary and the specification data sheets in par. 4-6.

4-4.3 ORGANIC ACID ESTERS

This class of fluids is employed principally as lubricants for gas turbine engines, instrument lubricants, base stock for synthetic greases, and to a limited extent as a base stock for hydraulic fluids. Their use as jet engine lubricants dates to the early 1950s and they are now the base for essentially all jet engine oils (Ref. 3). More recent applications are as the fluid components in high-performance greases, as additives in polyalphaolefin-base automotive and industrial products, and as the rubber swell additive in the MIL-H-83282 fluid. Two types of organic esters are used: dibasic acid esters, or diesters, and hindered polyol esters.

Dibasic acid esters have excellent low-temperature fluidity and very low pour points. The viscosity indices are usually high, frequently above 140, and they are shear stable. The hydrolytic stability is not as good as that of high-quality mineral oils. Diesters have good lubricating properties, good thermal and oxidation stability, and lower volatility than mineral oils of comparable viscosity. They also have the ability to suspend potential deposit-forming materials and thus keep internal machine surfaces clean. Other applications for diesters are in high-performance greases and as components in automotive engine oils.

Polyol esters have better high-temperature stability than the diesters. Low-temperature properties and hydrolytic stability are about the same, but viscosity indices may be lower. Volatility is equal or lower.

The military specification requirements for typical organic acid esters are given in the summary and data sheets in par. 4-6.

4-4.4 POLYSILOXANES

The silicone liquids, as a class, possess high viscosity indices (up to 300 or more), which make them attractive as base stocks for synthetic lubricants or as hydraulic fluids. These liquids have been used as hydraulic fluids, either alone or as compounded hydraulic fluids. Other characteristics that make the silicone liquids ideal for hydraulic fluids under severe operating conditions are

1. They have properties that do not change appreciably under a wide range of temperature and atmospheric conditions.
2. They are chemically inert, nontoxic, fire-resistant, water-repellent, and have low volatility.
3. They resist permanent viscosity change under severe mechanical stresses.
4. They have good oxidation stability.
5. They are available in a wide range of viscosities.
6. They have very good dielectric properties.
7. They are compatible with many construction materials.
8. They have low chemical solvency properties.

These liquids are also less flammable than petroleum oils of similar viscosities but do not resist ignition in many flammability tests. A main disadvantage of silicone liquids is that they have low surface tension (high compressibility), which permits excessive spreading on metal surfaces. As a result, effective adherent lubricating films do not form. In addition, silicones have a poor response to wear- and friction-reducing additives. Their high degree of compressibility also makes them poor hydraulic fluids.

Downloaded from http://www.everyspec.com

Summaries of federal and military specification requirements for typical silicone fluids and data sheets for these specifications are in par. 4-6.

4-4.5 GLYCOLS

This class of hydraulic fluids is frequently referred to by several names including polyglycols, polyalkylene glycols, and polyethers. Polyglycols are polymers made from ethylene oxide, propylene oxide, or their derivatives. These glycols, or polyglycol liquids, are used extensively as base stocks and as components for synthetic lubricants and hydraulic fluids, such as air conditioner lubricants, heavy-duty brake fluids, and components of fire-resistant, water-base hydraulic fluids. These liquids are characterized by high viscosity indices, usually over 150, good low-temperature fluidity, and pour points in the range of –20 to –50°C (–4 to –58°F). Inherent oxidation stability is fair to good but can be improved with inhibitors. Thermal stability also can be extended with inhibitors to a point far higher than that of comparable mineral oils. Volatility is low and flash points are quite high, above 200°C (392°F) in most cases.

Military specification requirements for a typical glycol-type hydraulic fluid are given in the summary and specification data sheet in par. 4-6.

4-4.6 POLYOXYALKYLENE GLYCOLS

The polyoxyalkylene glycol class of hydraulic fluids has many of the same properties as the polyalkylene glycol liquid discussed in subpar. 4-4.5. In some cases the polyoxyalkylene liquids have somewhat superior properties. Most of these fluids have a polyoxyethylene or polyoxypropylene base and are characterized by a very high viscosity index resulting from the chemical structure of the polymers. The high viscosity index is a natural quality, not attained from the use of additives and therefore not subject to shear in service. Also they are characterized by low pour points, good thermal stability, fair-to-good oxidation stability, good water tolerance, good corrosion resistance, and compatibility with rubber and other materials in brake systems. These fluids are considered particularly useful as hydraulic fluids for automotive brake systems (However, they have been found to be corrosive in some applications.) and for lubricating large, high-temperature gears and bearings, such as are found in the plastics, rubber, and paper industries.

A summary of military specification requirements for a brake fluid containing this class of liquid and a data sheet of specification properties are in par. 4-6.

4-4.7 WATER GLYCOLS

This class of hydraulic fluid is a solution of water, glycols, thickeners, and additives to provide viscosity and other properties desirable for satisfactory use in hydraulic systems. The bulk fluid temperature is limited to a maximum of 49°C (120°F). Temperatures above 60°C (140°F) may cause difficulty because of excessive evaporation of water. Air retention in this kind of fluid is more pronounced than with petroleum oils. An amply sized reservoir should be used with adequate vents and effective baffles. The return line should be located as far as possible from the pump intake to allow maximum deaeration. Also it is particularly important that water-glycol fluids discharge below the fluid level to avoid air entrainment.

The viscosity of these fluids are fairly low, but with proper additives they may be used satisfactorily at fairly low operating temperatures in systems such as aircraft hydraulic systems. Typical viscosity indices for these fluids are in the range of 140 to 160; the viscosity of all water-glycol fluids varies with water content. To control viscosity, avoid excessive loss of water since this reduces fire resistance and causes abnormally high viscosity, and use pure water, e.g., distilled water, steam condensate, or deionized water, to avoid introducing harmful iron, lime, salts, or other foreign materials into the system.

Due to the corrosive nature of the water component of these fluids, proper additives must be used to make the fluids compatible with most common construction materials, such as steel, brass, and copper. These fluids generally attack zinc, cadmium, and magnesium and often form sticky or gummy residues. These residues can plug strainers or orifices and cause valves and pump parts to stick. Parts that are plated or heavily alloyed should be tested before being used with water glycols or approval by the manufacturer regarding fluid/material compatibility should be obtained. Certain alloys of aluminum may be subjected to corrosion. Anodizing of aluminum parts effectively reduces such corrosion.

Antiwear and lubricity additives can make these fluids suitable for use in hydraulic systems and machines at moderate pressures. However, at high pressures or loads, service and maintenance problems increase. The additives contained in water-glycol liquids generally are compatible with the various seal and packing materials used in systems designed for petroleum-type fluids, but these fluids have a solvent action on most petroleum paints, enamels, and varnishes. Coatings are available that resist this action.

Military specification requirements for a typical water-glycol-type hydraulic fluid are given in the summary and specification data sheets in par. 4-6.

4-4.8 EMULSIONS

These water-oil mixtures are another class of liquids that depends upon the water content for their fire-resistant properties. These liquids, which have many characteristics similar to the water-glycol liquids, are available in two general types: oil-in-water (HFA) or water-in-oil (HFB). HFA fluids have water as the continuous phase, and the oil is present in lesser amounts as the dispersed medium. Many problems are associated with the water phase to include corrosion in both the liquid and vapor phases and high wear

Downloaded from http://www.everyspec.com

because of poor lubricating characteristics. The other type of emulsion, the water-in-oil mixture, or invert emulsion, in which the oil is the continuous phase and the water is the dispersed medium, has considerably different and generally better characteristics. These emulsions have good-to-acceptable corrosion and lubricating properties as well as fire resistance, emulsion stability, high viscosity index, and film strength, and they have good system cooling, compatibility with most materials, oxidation stability, and reasonable material cost.

Water-in-oil emulsions do not have high load capacity or good lubricating characteristics, but if fire resistance is needed for safety, these liquids can be applied. The usable temperature range of these liquids is generally between 5 and 60°C (41 and 140°F). However, they may be used somewhat beyond this range. At this time, there are no military specification requirements covering this class of fluids, but there are several commercial products that are widely used.

4-5 NONSPECIFICATION AND POTENTIAL HYDRAULIC FLUIDS

4-5.1 PETROLEUM-BASE FLUIDS

Most petroleum and many chemical companies produce hydrocarbon or petroleum-base hydraulic fluids that are not qualified under military or federal specifications. However, many of these liquids have properties generally similar to the specification liquids and are useful in hydraulic system applications. The list of these products and manufacturers is too extensive to list in this handbook, so it is recommended that individual manufacturers be contacted for information concerning the properties and applications of a specific hydraulic fluid.

Many petroleum manufacturers have extensive programs directed toward the development of improved petroleum-base hydraulic fluids. The improvements sought are in the area of extended operating temperature range, fire resistance, improved thermal and oxidative stability, better viscosity-volatility characteristics, better response to additives, and better low-temperature fluidity. Improvements are being obtained by a combination of several procedures including chemical conversion of selected mineral oil fractions, such as hydrocracked naphthenes, isomerized wax, alkylated aromatics, and polymerized olefins; use of advanced refining techniques (superrefining, vacuum fractionation, deep dewaxing) on selected crude stocks; and a selection of improved inhibitors and additives. Petroleum fractions have been produced that are capable of extended use at temperatures up to 343.3°C (650°F) and have a useful life of more than 50 h at 371.1°C (700°F) in essentially oxygen-free systems. New products in this class of hydraulic fluids are constantly being developed, so it is not practical to specify property limits here. However, the developmental hydraulic fluids generally have properties superior to those of the specification fluids. This result is, of course, the objective of the research efforts.

4-5.2 NONPETROLEUM-BASE HYDRAULIC FLUIDS

4-5.2.1 Phosphate Esters

Three types of phosphate esters are used as lubricants: (1) triaryl phosphate esters, (2) trialkyl phosphate esters, and (3) mixed alkyl aryl phosphate esters, e.g., alkyl diaryl and dialkyl aryl. The triaryl phosphate esters are most commercially significant as lubricants and are used today as fire-resistant hydraulic fluids in turbines and a wide variety of other fire-prone applications.

The basic properties of trialkyl and alkyl aryl phosphates are similar to the triaryl type. Most of the early fire-resistant hydraulic fluids fell into the trialkyl category, but presently they are more likely to be of the triaryl variety. Mixed alkyl aryl fluids frequently are found in aircraft hydraulic fluids. Phosphate esters vary widely in thermal stability depending on the molecular structure of the specific ester. Generally, triaryl phosphate esters are more stable than those in the alkyl aryl group. Bulk temperatures of 150 to 180°C (302 to 356°F) are acceptable for triaryl phosphate, as opposed to 90 to 120°C (194 to 248°F) for the alkyl aryl group.

The major advantage of the phosphate esters as a class of hydraulic fluids is their fire-resistant properties combined with their ability to lubricate moving parts, especially steel on steel.

Some phosphate ester formulations require special precautions in handling due to potential toxicity problems. Precautions are addressed in par. 7-6. Some of the names of commercial liquids of the phosphate-ester-type widely used by industry are

1. *Skydrol Hydraulic Fluid (Monsanto Company).* Type IV is the classification of approved fluids per the airframe manufacturers' material specifications. A Type IV fluid is a mixture of aliphatic and aromatic phosphate esters with additives, such as viscosity improver, acid acceptor, rust inhibitor, corrosion inhibitor, antioxidant, antifoam, and antierosion. The airframe manufacturers' hydraulic fluid specification defines two classes of Type IV hydraulic fluids. The classes are as follows: (1) Class 1, low density (Skydrol LD-4 fluid) and (2) Class 2, high density (Skydrol 500 B-4 fluid). Skydrol LD-4 has the inherent weight savings of the Class 1 fluids. Skydrol 500 B-4 has handling characteristics that are perceived by hydraulic system personnel to be beneficial (Ref. 6).

2. *HyJet IV-A (Chevron International Oil Company, Inc.).* This fluid is said to be formulated to eliminate servovalve erosion at elevated temperatures. Pumping characteristics, fire resistance, thermal stability, material compatibility, and miscibility are all presented as meeting or exceeding airframe manufacturers' requirements (Ref. 7).

Downloaded from http://www.everyspec.com

3. *Fyrquel (Stauffer Chemical Company).* Fyrquel fire-resistant hydraulic fluids are said to be additive-free, pure triaryl phosphate esters produced for a wide variety of applications for which the highest standards of fire resistance, purity, and performance are required. They are used in many industrial applications for which fire safety is an important concern. Common applications include reciprocating air compressors, glass and metal furnace hydraulics, "cat cracker" slide valves, gas and steam turbine main bearing lubricants, vacuum pumps, and high-pressure hydraulics. The manufacturer-listed advantages of these fluids include

a. Wide range of viscosities for virtually every application

b. Operational at high temperatures and pressures

c. Lubrication properties as good as or better than those of petroleum oils

d. Easily maintained to promote longer service life

e. Low volatility resulting in reduced fluid loss

f. No viscosity change due to mechanical shear

g. No additives to deposit in the system. (Ref. 8)

4. *Durad (FMC Corporation).* Triaryl phosphate esters are nonvolatile, fire-resistant, oily liquids that possess the characteristics necessary for air filter use (Ref. 9). Tricresyl phosphate by FMC was one of the first products used as a fire-resistant filter coating. FMC developed gelled phosphate ester systems, which exhibit both thixotropic and pseudoplastic flow. There exist many different classes of gelled phosphate esters used as flame-retardant plasticizers. The classes are as follows:

a. Kronitex 100 (triaryl phosphate ester)

b. Kronitex 200 (triaryl phosphate ester)

c. Kronitex 3600 (alkyl aryl phosphate ester)

d. Kronitex TPP (triphenyl phosphate ester)

e. Kronitex 1840 (thixotropic triaryl phosphate ester)

f. Kronitex 1884 (emulsifiable triaryl phosphate ester)

g. Kronitex 1886 (thixotropic triaryl phosphate ester).

In addition to these typical commercial products, phosphate ester liquids are compounded with many different materials to produce new liquids for different applications. Some of these liquids are compounds of several types of phosphate esters and additives; others are compounds of phosphate esters and other liquids, such as chlorinated silicone liquids. In general, the purpose of these developmental oils is to improve or extend the operating temperature limits and the range of certain characteristics, such as lubricity, wear prevention, and viscosity index.

4-5.2.2 Polysiloxanes (Silicones)

These compounds are silicone-containing materials being investigated for applications as hydraulic fluids. Their molecular structures contain only silicon-to-carbon bonds and silicon-to-oxygen bonds. The organic groups of these fluids may be parafinic or aromatic hydrocarbons with mixtures of alkyl, aryl, alkylaryl, or arylalkyl groups present.

In general, these liquids have poor lubricity and are very compressible, but they have excellent viscosity-temperature properties. Some additives have shown promise of improving selected characteristics. For example, some polymers effectively increase the viscosity, tricresyl phosphate and sodium petroleum sulfonate both act as antiwear additives, and sodium and potassium amides are effective antioxidants. Because of superior thermal stability and chemical inertness, the polysiloxanes appear to be a promising base stock for hydraulic fluids used in the temperature range of −17.8 to more than 371°C (0 to more than 700°F). Typical properties of polysiloxane fluids are pour point, −32°C (−25°F); flash point, above 260°C (500°F); specific gravity, 0.86; and viscosity, 37 mm^2/s at 37.8°C (100°F).

4-5.2.3 Silahydrocarbons

Silahydrocarbons have excellent thermal stability, viscosity index, and low-temperature flow characteristics. These fluids are called silahydrocarbons to reflect their hydrocarbon behavioral characteristics without the hydrolytic instability of silicate ester fluids or the poor bulk modulus properties of polysiloxanes. The outstanding advantage of silahydrocarbons is the 227°C (440°F) flash point coupled with excellent low-temperature viscosity properties. Silahydrocarbons are promising fire-resistant hydraulic fluids.

4-5.2.4 Poly (chlorophenyl methyl) siloxane

Silicone fluids are notoriously poor lubricants due to their lack of solvency powers and their tendency to displace or compete with small concentrations of lubricant additives for metal surfaces. Many attempts have been made to overcome this deficiency. One of the most significant improvements made in antiwear properties has been through the molecular addition of chlorine to the phenyl groups of a poly (phenyl methyl) siloxane fluid. The poly (chlorophenyl methyl) siloxane fluid used conforms to MIL-S-81087 and is described as a tetrachlorophenyldimethyl siloxane copolymer containing 3 mole fraction percent tetrachlorophenyl siloxane. This material is available in only one viscosity grade (50 mm^2/s at 25°C (77°F)) and is used as received. A poly (chlorophenyl methyl) siloxane formulation with vastly improved antiwear qualities has become attainable through the use of additives in relatively low concentrations. This fire-resistant hydraulic fluid was developed at the Naval Air Development Center for future military aircraft and was designated Nadraul MS-6 (Ref. 10). The resultant antiwear properties are still not comparable with those of petroleum fluids or other synthetic fluids, such as polyalphaolefins and phosphate esters.

Downloaded from http://www.everyspec.com

4-5.2.5 Halogenated Hydrocarbons

4-5.2.5.1 Chlorotrifluoroethylene (CTFE)

Chlorotrifluoroethylene (CTFE) fluids are saturated, low molecular weight oligomers of chlorotrifluoroethylene with the general formula $Cl(CF_2CFCl)_nCl$. Their chemical and physical properties are quite different from those of the hydrocarbon hydraulic fluids that are used presently as military hydraulic fluids. The major problems initially associated with use of chlorotrifluoroethylene as the base fluid for a nonflammable hydraulic fluid (NFH), such as high density, volatility, elastomer compatibility, compressibility, and additive solubility, have been addressed by extensive research and development efforts. The Air Force Wright Aeronautical Laboratories has performed the majority of research and development on CTFE, as well as on the accompanying 55.2-MPa (8000-psi) hydraulic systems for its use in advanced aircraft systems.

Various military groups have investigated the use of CTFE for their specific applications. The NFH development effort, according to Belvoir Research, Development, and Engineering Center (Ref. 2), has continued with the goal of implementing NFH in the Armored Systems Modernization (ASM) Program.

4-5.2.5.2 Perfluorinated Polymers

The perfluorinated polymers are stable, high-temperature liquids capable of use in the range of –45.6 to 371.1°C (–50 to 700°F) that do not form sludge or tar, even in the presence of air. These liquids have excellent flow characteristics, outstanding thermal and chemical stability, and generally good corrosion characteristics and are compatible with most metals and seal materials. Perfluorinated polymers are corrosive with certain metals above 260°C (500°F), provide little or no protection against rusting of ferrous metals at relatively high humidities, and have high densities. These fluids are very compressible (more so than CTFE) and are not very good lubricants. Very limited additive technology is available today for these fluids.

Perfluorinated polymers are also termed perfluoropolyalkylether fluids. Two specific types of perfluoropolyalkylether fluids—hexafluoropropylene oxide (HFPO) and linear perfluoropolyalkylether—have exhibited the most promising properties. Hexafluoropropylene-oxide-base fluids are based on the polymerization of hexafluoropropylene oxide, whereas linear perfluoropolyalkylethers are based on the photolytic oxidation of tetrafluoroethylene. These fluids have shown the potential to satisfy the advanced aerospace requirements. The perfluoropolyalkylethers—substituted perfluoroaryl phosphines—are an excellent class of antioxidant-anticorrosion additives that extend the upper temperature oxidative and thermal stability of the HFPO-base fluids to 343.3°C (650°F) and of the linear perfluoropolyalkyl class of fluids to 287.8°C (550°F). However, two of their undesirable properties for which there is no improvement anticipated by using additives are bulk modulus, which for perfluoropolyalkylethers is approximately 70% that of other functional fluids, and density, which is approximately double that of other functional fluids (Ref. 11).

4-5.2.6 Polyalphaolefins

Polyalphaolefins, or olefin oligomers, are paraffin-like liquid hydrocarbons with unique combinations of high-temperature viscosity retention, low volatility, very low pour point, and a high degree of oxidation resistance. These characteristics result from the wax-free combination of relatively unbranched molecules of predetermined chain length. Shear stability is excellent, as is hydrolytic stability. Due to the saturated nature of the hydrocarbon, the thermal stability is naturally good. Volatility is low and results in low evaporation loss at elevated temperatures. These broadly based characteristics make polyalphaolefins uniquely suitable for a wide range of lubricant applications, such as automotive engine lubricants, automotive gear lubricants, automotive hydraulic and transmission fluids, aviation hydraulic fluids, power transmission fluids, long-lived air compressor oils, high-temperature gear and bearing lubricants in industrial service, and dielectric coolants. In addition, polyalphaolefins are used as fire-resistant hydraulic fluids because of their low cost, availability, and excellent characteristics. MIL-H-83282, a synthetic hydrogenated polyalphaolefin, is used as an aircraft hydraulic fluid and has an operational temperature range of –46 to 204°C (–51 to 399°F), and MIL-H-46170, a corrosion-inhibited, polyalphaolefin-base fluid, is used for ground vehicles and has an operational temperature range of –54 to 121°C (–65 to 250°F). MIL-H-83282 fluid replaced mineral-oil-base MIL-H-5606 hydraulic fluid, which has an operational temperature range of –54 to 135°C (–65 to 275°F), in many, but not all, applications. MIL-H-5606 is still used if a –54°C (–65°F) operational capability is considered essential. The Air Force Wright Laboratory has developed MIL-H-87257, a low-temperature replacement for MIL-H-5606. MIL-H-87257, a synthetic hydrogenated polyalphaolefin, is used as an aircraft hydraulic fluid in the operational temperature range of –54 to 135°C (–65 to 275°F).

4-5.2.7 Polyphenyl Ethers

Lubricants based on polyphenyl ethers have outstanding high-temperature oxidation and radiation resistance. Polyphenyl ethers are thermally stable to above 450°C (842°F) and have excellent resistance to oxidation at elevated temperatures. However, they have high viscosity at normal ambient temperatures, which tends to restrict their use. Polyphenyl ethers can be used in the presence of strong acids because of their high chemical stability (inert behavior). Principal areas of use are in vacuum diffusion pumps, lubrication of electrical contacts in which noble metals are

Downloaded from http://www.everyspec.com

used, and any lubrication points exposed to high levels of radiation. The major drawback of polyphenyl ethers is their high melting point. These lubricants are solid below about 50°C (122°F) and require special preheating devices at the point of use. Also they have a high cost.

4-5.2.8 Liquid Metals

Liquid metals have some possible usage as hydraulic fluids for special applications at very high temperatures (up to 816°C (1500°F)). The liquid metal that has been investigated most, identified as NAK-77, is a mixture of sodium and potassium. This liquid is silvery in appearance (similar to mercury) and highly reactive with oxygen; therefore, it must be used in closed, oxygen-free systems. The mixture melts at about –12.2°C (10°F), atomizes in air at room temperature, and ignites spontaneously in air at 115°C (239°F). If water is present, NAK-77 reacts violently; it releases hydrogen and sufficient heat to ignite both the hydrogen and the NAK-77 if any oxygen is present. Its surface tension is about twice that of water, and its specific gravity is slightly less than that of water. The viscosity of NAK-77 is about 0.50 mm^2/s at 46°C (115°F), and the friction coefficient is high, about 10 times that of light oil.

Handling and usage of liquid metals are difficult since the hydraulic system must be hermetically sealed and contain an inert gas. If NAK-77 burns, it is nonexplosive unless water is present, but the fumes are toxic.

4-6 HYDRAULIC FLUID SPECIFICATIONS

4-6.1 INTRODUCTION

The subparagraphs that follow contain information from the specifications for the hydraulic fluids mentioned in the preceding paragraphs. The specifications discussed in the subparagraphs that follow and their classifications are listed here:

1. Petroleum-Base Liquids
   MIL-F-17111B(OS)
   MIL-H-17672D
   MIL-H-27601A(USAF)
   MIL-H-46001D
   MIL-H-5606F
   MIL-H-6083E
   MIL-H-81019D
   MIL-L-17331H(SH)
   MIL-L-2104F
   MIL-L-46167B
2. Synthetic Hydrocarbons
   MIL-H-46170B
   MIL-H-83282C
   MIL-H-87257
3. Glycol/Water Glycol
   MIL-H-22072C
   MIL-H-5559A(AS)
   SAE J 1703
4. Silicone
   MIL-B-46176A
5. Polyphenyl Ether
   MIL-L-87100(USAF)
6. Polysiloxane
   MIL-S-81087C
   VV-D-1078B
7. Phosphate Ester
   MIL-H-19457D(SH)
8. Chlorotrifluoroethylene Polymer
   MIL-H-53119(ME)

4-6.2 MIL-F-17111B(OS): POWER TRANSMISSION FLUID

4-6.2.1 Descriptive Summary

a. *General Description.* This liquid is a power transmission fluid suitable for use in naval ordnance systems involving mechanical- or fibrous-type filters or centrifugal purification. It is noncorrosive to bearings and hydraulic systems and will not cause clogging of oil screens or valves.

b. *Operating Temperatures.* The operating temperature range of this fluid is –34 to 4°C (–29 to 39.2°F).

c. *Chemical Composition.* The finished liquid is a petroleum-base fluid plus antiwear agents and other approved additives that improve the viscosity, temperature, and lubricating properties of the fluid.

d. *Uses.* The fluid is used for the hydraulic transmission of power, particularly in naval ordnance hydraulic equipment.

e. *Limitations.* A maximum operating temperature of 4°C (39.2°F) may be a limitation for some applications.

f. *Preparing Activity:*
Commanding Officer
Naval Ordnance Station
Standardization Branch (Code 3730)
Indian Head, MD 20640-5000

g. *Military Designation.* Not reported

h. *NATO Designation.* Code No. H-575.

4-6.2.2 Tabular Data

Tabular data for this fluid are given in Table 4-5, which is located at the end of this chapter.

4-6.3 MIL-H-17672D: HYDRAULIC FLUID, PETROLEUM, INHIBITED

4-6.3.1 Descriptive Summary

a. *General Description.* These fluids are petroleum-base hydraulic fluids containing anticorrosion and antioxidation additives for use in hydraulic systems. This hydraulic fluid is not to be used if fire-resistant fluid is required. This specification—MIL-H-17672D—covers three types.

Downloaded from http://www.everyspec.com

Military Symbol	*NATO Symbol*	*ISO Viscosity Grade*
2075-T-H	—	32
2110-T-H	H-573	46
2135-T-H	—	68

b. *Operating Temperatures*. Not reported

c. *Chemical Composition*. This fluid is a blend of virgin petroleum-base hydraulic fluid stocks and additive agents in order to meet the requirements of MIL-H-17672D.

d. *Uses*. Hydraulic fluid applications for which a high-grade lubricating oil with anticorrosion and antioxidation properties is desired.

e. *Limitations*. This fluid should not be used in systems in which a fire-resistant fluid is required.

f. *Preparing Activity*:
Commander
Naval Sea Systems Command (SEA 55Z3)
DoD Standardization Program and Documents Division
Washington, DC 20362-5101

g. *Military Designation*. Three separate military symbols are given for each viscosity grade this specification covers. They are 2075-T-H for ISO Viscosity Grade 32, 2110-T-H for ISO Viscosity Grade 46, and 2135-T-H for ISO Viscosity Grade 68.

h. *NATO Designation*. Only military symbol 2110-T-H has a NATO symbol. It is H-573.

4-6.3.2 Tabular Data

Tabular data for this fluid are given in Table 4-6, which is located at the end of this chapter.

4-6.4 MIL-H-27601A (USAF): HYDRAULIC FLUID, PETROLEUM-BASE, HIGH-TEMPERATURE, FLIGHT VEHICLE

4-6.4.1 Descriptive Summary

a. *General Description*. This is a petroleum-base hydraulic fluid.

b. *Operating Temperatures*. The operating temperature range of this fluid is –40 to 285°C (–40 to 550°F).

c. *Chemical Composition*. The materials used to compound the hydraulic fluid consist of and are limited to a paraffinic base stock of natural hydrocarbons. Additives are limited to the following agents: oxidation inhibitors, such as a hindered bis-phenol, and antiwear agents, such as tricresylphosphate. Any use of other agents must be approved by the procuring activity.

d. *Uses*. This hydraulic fluid is intended for use in the hydraulic systems of flight vehicles.

e. *Limitations*. Not reported

f. *Preparing Activity*:
ASD/ENES
Wright-Patterson Air Force Base, OH 45433-6503

g. *Military Designation*. Not reported

h. *NATO Designation*. Not reported.

4-6.4.2 Tabular Data

Tabular data for this fluid are given in Table 4-7, which is located at the end of this chapter.

4-6.5 MIL-H-46001D: HYDRAULIC FLUIDS, PETROLEUM-BASE, FOR MACHINE TOOLS

4-6.5.1 Descriptive Summary

a. *General Description*. MIL-H-46001D covers four viscosity grades of petroleum-base hydraulic fluid intended for use in hydraulic systems of metal-working machine tools. The four viscosity grades offered are as follows:

Grade 1—ISO VG 32
Grade 2—ISO VG 46
Grade 3—ISO VG 68
Grade 4—ISO VG 150

b. *Operating Temperatures*. Not reported

c. *Chemical Composition*. These hydraulic fluids are derived from petroleum fractions. They may be virgin or rerefined stocks or a combination thereof. Functional additives, such as antiwear, oxidation inhibitors and corrosion inhibitors, are allowed as necessary to meet specification requirements.

d. *Uses*. These fluids are intended for use in hydraulic systems of metal-working tools that require antiwear oils. Corrosion-inhibiting and oxidation-resistant lubricating oils (R and O oils) of equivalent viscosity grades and without antiwear additives are described by MIL-H-17672. The selection of viscosity grade and type of hydraulic oil should be based on the recommendation of the machine tool manufacturer.

e. *Limitations*. Not reported

f. *Preparing Activity*:
Commander
US Army Belvoir Research, Development, and Engineering Center
ATTN: STRBE-TSE
Fort Belvoir, VA 22060-5606

g. *Military Designation*. Not reported

h. *NATO Designation*. Not reported.

4-6.5.2 Tabular Data

Tabular data for this fluid are given in Table 4-8, which is located at the end of this chapter.

4-6.6 MIL-H-5606F: HYDRAULIC FLUID, PETROLEUM-BASE; AIRCRAFT, MISSILE, AND ORDNANCE

4-6.6.1 Descriptive Summary

a. *General Description*. This is a petroleum-base hydraulic fluid that can be used over a fairly wide temperature range.

Downloaded from http://www.everyspec.com

b. *Operating Temperatures*. The operating temperature of this fluid is –54 to 135°C (–65 to 275°F).

c. *Chemical Composition*. The fluid consists of petroleum products with additive materials to improve low-temperature flow and viscosity-temperature characteristics, resistance to oxidation, and antiwear properties of the fluid. Pour point depressants may be used.

d. *Uses*. The fluid is intended for use in automatic pilots, shock absorbers, brakes, flap-control mechanisms, missile hydraulic servo-controlled systems, and other hydraulic systems requiring synthetic sealing material. It is dyed red for identification purposes.

e. *Limitations*. None reported

f. *Preparing Activity*:
ASD/ENES
Wright-Patterson Air Force Base, OH 45433-6503

g. *Military Designation*. OHA

h. *NATO Designation*. Code No. H-515.

4-6.6.2 Tabular Data

Tabular data for this fluid are given in Table 4-9, which is located at the end of this chapter.

4-6.7 MIL-H-6083E: HYDRAULIC FLUID, PETROLEUM-BASE, FOR PRESERVATION AND OPERATION

4-6.7.1 Descriptive Summary

a. *General Description*. This liquid is a petroleum-base hydraulic fluid with the addition of viscosity-temperature coefficient improvers, oxidation inhibitors, and corrosion inhibitors.

b. *Operating Temperatures*. The operating temperature range of this fluid is –54 to 135°C (–65 to 275°F).

c. *Chemical Composition*. This hydraulic fluid is derived from petroleum fractions that may be virgin or rerefined stocks or a combination thereof. Functional additives, such as antiwear, oxidation inhibitors and corrosion inhibitors, are mixed with the base stock as needed to meet the specified requirements of this fluid.

d. *Uses*. This hydraulic fluid, which has a temperature range of –54 to 135°C (–65 to 275°F), is intended for use as an operational fluid in applications in which corrosion protection is required and a determination has been made that the hydraulic fluid FRH specified in MIL-H-46170 cannot be used. These applications include use in recoil mechanisms and hydraulic systems of rotating weapons or aiming devices of tactical and support equipment, except combat armored vehicles or equipment that require FRH. This hydraulic fluid is also used as a preservative fluid for aircraft hydraulic systems and components in which hydraulic fluid OHA specified in MIL-H-5606 is used as an operational fluid.

e. *Limitations*. Not reported

f. *Preparing Activity*:
Commander
US Army Belvoir Research, Development, and Engineering Center
ATTN: STRBE-TSE
Fort Belvoir, VA 22060-5606

g. *Military Designation*. OHT

h. *NATO Designation*. Symbol C-635.

4-6.7.2 Tabular Data

Tabular data for this fluid are given in Table 4-10, which is located at the end of this chapter.

4-6.8 MIL-H-81019D: HYDRAULIC FLUID, PETROLEUM-BASE, ULTRA-LOW-TEMPERATURE, METRIC

4-6.8.1 Descriptive Summary

a. *General Description*. This is a petroleum-base hydraulic fluid for use in aircraft, missile, and ordnance hydraulic systems.

b. *Operating Temperatures*. The operating temperature range of this fluid is –70 to 100°C (–94 to 212°F).

c. *Chemical Composition*. This hydraulic fluid consists of petroleum products with additive materials to improve the viscosity-temperature characteristics, resistance to oxidation and corrosion, and antiwear properties of the finished fluid.

d. *Uses*. Intended uses are automatic pilots, shock absorbers, brakes, flap-control mechanisms, and other systems requiring synthetic sealing material.

e. *Limitations*. This fluid is not interchangeable with any other grade or type of hydraulic fluid except MIL-H-5606 in emergencies.

f. *Preparing Activity*:
Commanding Officer
Naval Air Engineering Center
Engineering Specifications and Standards Department (ESSD Code 93)
Lakehurst, NY 08733

g. *Military Designation*. Not reported

h. *NATO Designation*. Not reported.

4-6.8.2 Tabular Data

Tabular data for this fluid are given in Table 4-11, which is located at the end of this chapter.

Downloaded from http://www.everyspec.com

4-6.9 MIL-L-17331H(SH): LUBRICATING OIL, STEAM TURBINE AND GEAR, MODERATE SERVICE

4-6.9.1 Descriptive Summary

a. *General Description*. This is a steam turbine lubricating oil for use in main turbines and gears, auxiliary turbine installations, certain hydraulic equipment, general mechanical lubrication, and air compressors and for use as a general mechanical lubricant.

b. *Operating Temperatures*. Not reported

c. *Chemical Composition*. This lubricating oil is a stable homogeneous blend of virgin petroleum lubricating oil stocks plus additive agents, if necessary, to meet the requirements of MIL-L-17331. However, the use of additives to improve the viscosity-temperature characteristics of the base stocks is not permitted, although additives, in quantities up to 0.5%, may be used to meet the pour point requirement. Additives, if used, shall not contain chlorine or zinc materials.

d. *Uses*. This lubricant is intended for use in main and auxiliary turbines and gears, air compressors, and certain hydraulic equipment, as well as for general mechanical lubrication.

e. *Limitations*. Not reported

f. *Preparing Activity*:

Commander
Naval Sea Systems Command (SEA 55Z3)
DoD Standardization Program and Documents Division
Washington, DC 20362-5101

g. *Military Designation*. 2190-TEP

h. *NATO Designation*. 0-250.

4-6.9.2 Tabular Data

Tabular data for this fluid are given in Table 4-12, which is located at the end of this chapter.

4-6.10 MIL-L-2104F: LUBRICATING OIL, INTERNAL COMBUSTION ENGINE, TACTICAL SERVICE

4-6.10.1 Descriptive Summary

a. *General Description*. This specification covers four grades of engine oils suitable for lubrication of reciprocating internal combustion engines of both spark-ignition and compression-ignition types and for power transmission fluid applications in tactical equipment.

b. *Operating Temperatures*. Not reported; however, the following recommended ambient temperature ranges for use are given:

Viscosity Grade	*Expected Ambient Temperature, °C (°F)*
10W	−25 to 5 (−13 to 40)
30	−10 to above 30 (15 to above 90)
40	−5 to above 30 (25 to above 90)
15W-40	−18 to above 30 (0 to above 90)

c. *Chemical Composition*. These engine lubricating oils are derived from petroleum fractions, synthetically prepared compounds, or a combination of the two types of products. They may be virgin or rerefined stocks or a combination thereof. The stocks shall be compounded with functional additives such as detergents, dispersants, oxidation inhibitors, and corrosion inhibitors, needed to meet the specified requirements. No carcinogenic constituents are present.

d. *Uses*. The lubricating oils covered by MIL-L-2104F are intended for the crankcase lubrication of reciprocating spark-ignition and compression-ignition engines used in all types of military tactical ground equipment and for the crankcase lubrication of high-speed, high-output, supercharged compression-ignition engines used in all ground equipment. The oils are also intended for the same application in power transmissions, hydraulic systems, and nonhypoid gear units of construction equipment, materials handling equipment, and tactical ground equipment. The lubricating oils covered by this specification meet service classifications CD and SE of SAE J 183 and are intended for all conditions of operational service, as defined by appropriate lubrication orders, when temperatures are above −25°C (−13°F). The Grade 10W oil is not to be used in high-output, two-cycle compression-ignition engines.

e. *Limitations*. Not reported

f. *Preparing Activity*:

Commander
US Army Belvoir Research, Development, and Engineering Center
ATTN: STRBE-TSE
Fort Belvoir, VA 22060-5606

g. *Military Designation*:

Viscosity Grade	*Military Symbol*
SAE 10W	OE/HDO-10
SAE 30	OE/HDO-30
SAE 40	OE/HDO-40
SAE 15W-40	OE/HDO-15/40

h. *NATO Designation*:

Viscosity Grade	*NATO Grade*
SAE 10W	0-237
SAE 30	0-238
SAE 40	—
SAE 15W-40	0-1236

4-6.10.2 Tabular Data

Tabular data for this fluid are given in Table 4-13, which is located at the end of this chapter.

Downloaded from http://www.everyspec.com

4-6.11 MIL-L-46167B: LUBRICATING OIL, INTERNAL COMBUSTION ENGINE, ARCTIC

4-6.11.1 Descriptive Summary

a. *General Description.* This oil is one grade of engine oil suitable for lubrication of reciprocating internal combustion engines of both spark-ignition and compression-ignition types and for power transmission fluid applications in ground equipment for all types of service when ambient temperatures are in the range of –55 to 5°C (–67 to 41°F) and for use in arctic regions as an all-weather power transmission fluid for tactical ground equipment.

b. *Operating Temperatures.* The operating range of this oil is –55 to 5°C (–67 to 41°F).

c. *Chemical Composition.* The engine lubricating oil is derived from petroleum fractions, synthetically prepared compounds, or a combination of the two. It may be virgin stock, rerefined stock, or combinations thereof. Additives included detergents, dispersants, oxidation inhibitors, and corrosion inhibitors as necessary to meet the requirements of MIL-L-46167B.

d. *Uses.* This lubricating oil is intended for the crankcase lubrication of reciprocating spark-ignition and compression-ignition engines used in all types of ground equipment. It is intended for crankcase lubrication under all conditions of service, as defined by appropriate lubrication orders, when ambient temperatures are in the range of –55 to 5°C (–67 to 41°F). The lubrication oil is not to replace Grade 10W, MIL-L-2104 lubricant in areas in which ambient temperatures will not be below –25°C (–13°F). In addition, this lubricating oil is intended for use in arctic regions as an all-weather (year-round) power transmission fluid for military ground equipment.

e. *Limitations.* Not reported

f. *Preparing Activity*:
Commander
US Army Belvoir Research, Development, and Engineering Center
ATTN: STRBE-TSE
Fort Belvoir, VA 22060-5606

g. *Military Designation.* OEA

h. *NATO Designation.* O-183.

4-6.11.2 Tabular Data

Tabular data for this fluid are given in Table 4-14, which is located at the end of this chapter.

4-6.12 MIL-H-46170B: HYDRAULIC FLUID, RUST-INHIBITED, FIRE-RESISTANT SYNTHETIC-HYDROCARBON-BASE

4-6.12.1 Descriptive Summary

a. *General Description.* This liquid is a synthetic hydrocarbon-base hydraulic fluid. There are two types of this fluid—Type I is undyed and Type II is dyed red for aerospace use.

b. *Operating Temperatures.* The operating range of this fluid is –40 to 135°C (–40 to 275°F).

c. *Chemical Composition.* This hydraulic fluid consists of a synthetic hydrocarbon-base stock (alpha-olefin polymer) and contains additives to meet the technical requirements of the finished product. This fluid contains no resins, gums, fatty oils, oxidized hydrocarbons, chlorine, or silica.

d. *Uses.* The Type I hydraulic fluid of MIL-H-46170B is intended for use in the recoil mechanism and hydraulic systems of a tank. If this fluid is used in any other ground equipment mechanisms or systems, a study should be made to determine its applicability in such mechanisms or systems, particularly in the area of elastomer compatibility and operation at high and low temperatures. The fluid is rust inhibited and may be used as a preservative medium for hydraulic systems and components. The Type II fluid is intended for use in aerospace test stands.

e. *Limitations.* A study may be necessary to determine the applicability of this fluid.

f. *Preparing Activity*:
Commander
US Army Belvoir Research, Development, and Engineering Center
ATTN: STRBE-TSE
Fort Belvoir, VA 22060-5606

g. *Military Designation.* FRH

h. *NATO Designation.* Code No. H-544 (Type I).

4-6.12.2 Tabular Data

Tabular data for this fluid are given in Table 4-15, which is located at the end of this chapter.

4-6.13 MIL-H-83282C: HYDRAULIC FLUID, FIRE-RESISTANT, SYNTHETIC HYDROCARBON-BASE, AIRCRAFT, METRIC

4-6.13.1 Descriptive Summary

a. *General Description.* This fluid is used in aircraft and missile hydraulic systems. Also it can be used in airborne engine compressors and related equipment.

b. *Operating Temperatures.* The operating range of this fluid is –40 to 205°C (–40 to 401°F).

c. *Chemical Composition.* This fluid consists of a synthetic hydrocarbon-base stock with additives as necessary to meet the requirements of MIL-H-83282C. However, the fluid cannot contain any resins, soaps, gums, fatty oils, or oxidized hydrocarbons. Additionally, no pour point depressants or viscosity index improvers may be used.

d. *Uses.* This hydraulic fluid is intended for use from –40 to 205°C (–40 to 401°F) in automatic pilots, shock absorbers, air compressor gearboxes, brakes, flap-control

Downloaded from http://www.everyspec.com

mechanisms, missile hydraulic servo-controlled systems, and other hydraulic systems using synthetic sealing material.

e. *Limitations*. Not reported

f. *Preparing Activity*:

Commander
Naval Air Systems Command (AIR 51122)
Washington, DC 20361-5110

g. *Military Designation*. Not reported

h. *NATO Designation*. Code No. H-537.

4-6.13.2 Tabular Data

Tabular data for this fluid are given in Table 4-16, which is located at the end of this chapter.

4-6.14 MIL-H-87257: HYDRAULIC FLUID, FIRE-RESISTANT, LOW-TEMPERATURE, SYNTHETIC HYDROCARBON-BASE, AIRCRAFT AND MISSILE

4-6.14.1 Descriptive Summary

a. *General Description*. This is a synthetic hydrocarbon-base hydraulic fluid for use in the -54 to 135°C (-65 to 275°F) temperature range in aircraft and missile hydraulic systems.

b. *Operating Temperatures*. The operating temperature range of this fluid is -54 to 135°C (-65 to 275°F).

c. *Chemical Composition*. This hydraulic fluid consists of a synthetic polyalphaolefin hydrocarbon base stock with additives as necessary to meet the requirements of MIL-H-87257. However, this fluid cannot contain any resins, soaps, gums, fatty oils, or oxidized hydrocarbons. Additionally, no pour point depressants or viscosity index improvers may be used.

d. *Uses*. This hydraulic fluid is intended for use from -54 to 135°C (-65 to 275°F) in automatic pilots, shock absorbers, air compressor gearboxes, brakes, flap-control mechanisms, missile hydraulic servo-controlled systems, and other hydraulic systems using synthetic sealing material.

e. *Limitations*. Not reported

f. *Preparing Activity*:

ASD/ENES
Wright-Patterson Air Force Base, OH 45433-6503

g. *Military Designation*. Not reported

h. *NATO Designation*. Code No. H-538.

4-6.14.2 Tabular Data

Tabular data for this fluid are given in Table 4-17, which is located at the end of this chapter.

4-6.15 MIL-H-22072C(AS): HYDRAULIC FLUID, CATAPULT

4-6.15.1 Descriptive Summary

a. *General Description*. This liquid is a fire-resistant, water-base fluid for use in catapult systems.

b. *Operating Temperatures*. Not reported

c. *Chemical Composition*. This is a water-glycol-base fluid and may contain additives to provide lubrication, corrosion prevention, and viscosity-temperature characteristics.

d. *Uses*. This hydraulic fluid is intended for use as a power transmission medium for hydraulic-actuated systems in naval aircraft launching catapults.

e. *Limitations*. This fluid may soften and remove most commonly used paints.

f. *Preparing Activity*:

Commander
Naval Air Systems Command (AIR 51122)
Washington, DC 20361-5110

g. *Military Designation*. Not reported

h. *NATO Designation*. Code No. H-579.

4-6.15.2 Tabular Data

Tabular data for this fluid are given in Table 4-18, which is located at the end of this chapter.

4-6.16 MIL-H-5559A(AS): HYDRAULIC FLUID, ARRESTING GEAR

4-6.16.1 Descriptive Summary

a. *General Description*. This liquid is an ethylene-glycol-base fluid intended for use in aircraft arresting gear systems.

b. *Operating Temperatures*. Not reported

c. *Chemical Composition*. The fluid is a blend of ethylene glycol, water, triethanolamine phosphate, and sodium mercaptobenzothiazole.

d. *Uses*. This hydraulic fluid covered by MIL-H-5559A(AS) is intended for use in aircraft arresting gear systems.

e. *Limitations*. This fluid is not interchangeable with any other type or grade of hydraulic fluid. It will freeze at about -18°C (0°F) when undiluted.

f. *Preparing Activity*:

Commander
Naval Air Systems Command (AIR 51122)
Washington, DC 20361-5110

g. *Military Designation*. Not reported

h. *NATO Designation*. Not reported.

4-6.16.2 Tabular Data

Tabular data for this fluid are given in Table 4-19, which is located at the end of this chapter.

Downloaded from http://www.everyspec.com

4-6.17 SAE J 1703: MOTOR VEHICLE BRAKE FLUID

4-6.17.1 Descriptive Summary

a. *General Description.* This liquid is a motor vehicle brake fluid of the nonpetroleum type for use in the braking system of any motor vehicle, such as passenger cars, trucks, bus, or trailers.

b. *Operating Temperatures.* Not reported

c. *Chemical Composition.* The materials used are such that the resulting product conforms to the requirements of SAE J 1703.

d. *Uses.* For use as a motor vehicle brake fluid

e. *Limitations.* This fluid is not intended for use under arctic conditions. It is designed for use in braking systems fitted with rubber cups and seals made from natural rubber (NR), styrene-butadiene rubber (SBR), or a terpolymer of ethylene, propylene, and a diene (EPDM).

f. *Preparing Activity:*
Society of Automotive Engineers, Inc.
400 Commonwealth Drive
Warrendale, PA 15096

g. *Military Designation.* Not reported

h. *NATO Designation.* Not reported.

4-6.17.2 Tabular Data

Tabular data for this fluid are given in Table 4-20, which is located at the end of this chapter.

4-6.18 MIL-B-46176A: BRAKE FLUID, SILICONE, AUTOMOTIVE, ALL-WEATHER, OPERATIONAL AND PRESERVATIVE, METRIC

4-6.18.1 Descriptive Summary

a. *General Description.* This fluid is a silicone-base hydraulic brake fluid for use in hydraulic brake systems at ambient temperatures ranging from –55 to 55°C (–67 to 131°F).

b. *Operating Temperatures.* The operating temperature range for this fluid is –55 to 205°C (–67 to 401°F).

c. *Chemical Composition.* This fluid contains at least 70% by weight of a diorgano polysiloxane. It has a bluish-purple color. No carcinogenic constituents are present.

d. *Uses.* This brake fluid is intended for use as an operational fluid and a preservative fluid in automotive hydraulic brake systems.

e. *Limitations.* Adequate flushing of the brake system must be accomplished to remove all traces of the previous types of brake fluid. If these fluids are not completely removed, the corrosion-protective and -preservative properties of the silicone fluid are negated.

f. *Preparing Activity:*
Commander
US Army Belvoir Research, Development, and Engineering Center
ATTN: STRBE-TSE
Fort Belvoir, VA 22060-5606

g. *Military Designation.* BFS

h. *NATO Designation.* Code No. H-547.

4-6.18.2 Tabular Data

Tabular data for this fluid are given in Table 4-21, which is located at the end of this chapter.

4-6.19 MIL-L-87100 (USAF): LUBRICATING OIL, AIRCRAFT TURBINE ENGINE, POLYPHENYL-ETHER-BASE

4-6.19.1 Descriptive Summary

a. *General Description.* This liquid is one grade of aircraft gas turbine engine lubricating oil.

b. *Operating Temperatures.* The operating temperature range for this fluid is 15 to 300°C (59 to 572°F).

c. *Chemical Composition.* The composition of this lubricating oil is not limited except that the base stock is essentially bis (phenoxyphenoxy) benzene.

d. *Uses.* This lubricating oil is intended for use in specific models of aircraft turbine engines and power equipment requiring a polyphenyl-ether-base oil.

e. *Limitations.* This fluid is not suitable for use below its minimum operating temperature of 15°C (59°F).

f. *Preparing Activity:*
ASD/ENES
Wright-Patterson Air Force Base, OH 45433-6503

g. *Military Designation.* Not reported

h. *NATO Designation.* Not reported.

4-6.19.2 Tabular Data

Tabular data for this fluid are given in Table 4-22, which is located at the end of this chapter.

4-6.20 MIL-S-81087C: SILICONE FLUID, CHLORINATED PHENYL METHYL POLYSILOXANE

4-6.20.1 Descriptive Summary

a. *General Description.* This liquid is one type of chlorinated phenyl methyl polysiloxane fluid with a high thermal stability for use over a wide temparature range.

b. *Operating Temperatures.* The operating temperature range of this fluid in contact with air is –75 to 220°C (–103 to 428°F) and in an inert atmosphere is –75 to 260°C (–103 to 500°F).

Downloaded from http://www.everyspec.com

c. *Chemical Composition*. This silicone fluid is a methyl chlorophenyl polysiloxane conforming to the requirements of MIL-S-81087C.

d. *Uses*. This fluid is intended for use in lubricating, hydraulic, damping, and related applications over a wide temperature range including

1. Hydraulic systems and servomechanisms
2. Crankcases and gearboxes for mechanical drives and compressors, engines, and pumps
3. Ball, sleeve, and pivot bearings in instruments, electronic equipment, and electrical motors
4. Clocks and timing devices
5. Fluid transmissions.

e. *Limitations*. Substitution of this fluid in systems of components designed for other fluid types should be avoided, unless service performance confirms its suitability. This silicone fluid is not intended for general-purpose applications.

f. *Preparing Activity*:
Commander
Naval Air Systems Command (AIR 51122)
Washington, DC 20361-5110

g. *Military Designation*. Not reported

h. *NATO Designation*. Code No. H-536.

4-6.20.2 Tabular Data

Tabular data for this fluid are given in Table 4-23, which is located at the end of this chapter.

4-6.21 VV-D-1078B: DAMPING FLUID, SILICONE-BASE (DIMETHYL POLYSILOXANE)

4-6.21.1 Descriptive Summary

a. *General Description*. These liquids are dimethyl polysiloxane silicone-base damping fluids having viscosities of 0.65 through 2,500,000 mm^2/s.

b. *Operating Temperatures*. Not reported

c. *Chemical Composition*. This fluid is a dimethyl polysiloxane fluid available in a wide range of viscosities. No visible suspended matter, water, or sediment is allowed in the fluid.

d. *Uses*. These fluids are intended for use as damping fluids, transducer fluids, lubricants, heat transfer fluids, dielectric fluids, mold release agents, water repellents, hydraulic fluids, and protective dressings and impregnants.

e. *Limitations*. This fluid cannot be mixed with any other lubricating oil or hydraulic fluid. Before this fluid can be used as a replacement for another fluid, the system in which it is to be used must be disassembled and all parts cleaned with fresh solvent. Dimethyl polysiloxanes are not effective lubricants (steel against steel) at high loads. These fluids, particularly in the lower viscosities, tend to cause certain elastomers to shrink and harden. Consideration should be given to the type elastomer used when in contact with these fluids.

f. *Preparing Activity*:
Commander
Naval Air Systems Command (AIR 51122)
Washington, DC 20361-5110

g. *Military Designation*. Not reported

h. *NATO Designation*. The following damping fluids are identified by corresponding NATO code numbers:

Grade in mm^2/s	*NATO Code Number*
10	S-1714
50	S-1718
100	S-1720
7,500	S-1724
20,000	S-1726
100,000	S-1728
200,000	S-1732

4-6.21.2 Tabular Data

Tabular data for this fluid are given in Table 4-24, which is located at the end of this chapter.

4-6.22 MIL-H-19457D(SH): HYDRAULIC FLUID, FIRE-RESISTANT, NONNEUROTOXIC

4-6.22.1 Descriptive Summary

a. *General Description*. This is a fire-resistant hydraulic fluid for hydraulic systems that are accumulator loaded and operate above 4137 kPa (600 lb/in.^{2}).

b. *Operating Temperatures*. Not reported

c. *Chemical Composition*. The fluid is a stable, homogeneous formulation of tertiary butylated triphenyl phosphate and such other ingredients as are required for conformance to MIL-H-19457D(SH). Additives to permit conformance to the viscosity requirements of the fluid are not permitted.

d. *Uses*. This fluid is intended for use as a fire-resistant power transmission fluid for accumulator-loaded shipboard hydraulic systems that operate at pressures exceeding 4137 kPa (600 lb/in.^{2}) gage.

e. *Limitations*. This fluid may soften and deteriorate most commonly used paints, elastomers, and electrical insulating materials and therefore requires the use of compatible materials as necessary. Special handling procedures are required when using this fluid. This material is not satisfactory for use on board submarines.

f. *Preparing Activity*:
Commander
Naval Sea Systems Command (SEA 55Z3)
DoD Standardization Program and Documents Division
Washington, DC 20362-5101

g. *Military Designation*. Not reported

h. *NATO Designation*. Not reported.

Downloaded from http://www.everyspec.com

4-6.22.2 Tabular Data

Tabular data for this fluid are given in Table 4-25, which is located at the end of this chapter.

4-6.23 MIL-H-53119(ME): HYDRAULIC FLUID, NONFLAMMABLE, CHLOROTRIFLUOROETHYLENE-BASE

4-6.23.1 Descriptive Summary

a. *General Description*. This is a chlorotrifluoroethylene-base hydraulic fluid for use in the hydraulic systems of selected armored vehicles.

b. *Operating Temperatures*. The operating temperature range of this fluid is –54 to 135°C (–65 to 275°F).

c. *Chemical Composition*. This fluid consists of a base stock that is a mixture of chlorotrifluoroethylene (CTFE) oligomers and additive materials to improve the lubricity and antirust characteristics. Recycled CTFE is not to be excluded from use. Additive materials that improve the low-temperature flow and viscosity-temperature characteristics—pour point depressants and viscosity index improvers—are not permitted.

d. *Uses*. This fluid is intended for use in selected armored vehicles for which requirements for vulnerability reduction and crew survivability are specified. Use applications are in gun recoil mechanisms, turret control systems, braking and steering systems of tracked vehicles, and in other hydraulic systems using synthetic sealing materials.

e. *Limitations*. This fluid is not a "flush and fill" replacement for MIL-H-46170 (FRH) or MIL-H-6083 (OHT). The user must determine the applicability of a nonflammable hydraulic fluid, particulary in the areas of lubricity requirements, seal compatibility, metallurgy, and system fluid flow requirements.

f. *Preparing Activity*:
Commander
US Army Belvoir Research, Development, and Engineering Center
ATTN: STRBE-TSE
Fort Belvoir, VA 22060-5606

g. *Military Designation*. NFH

h. *NATO Designation*. Not reported.

4-6.23.2 Tabular Data

Tabular data for this fluid are given in Table 4-26, which is located at the end of this chapter.

4-7 VISCOSITY-TEMPERATURE GRAPHS

The pages that follow present ASTM viscosity-temperature graphs of the hydraulic fluids discussed in the preceding paragraphs. These graphs are listed in the same order as the preceding military specifications.

Graphs of the following hydraulic fluids are not included because specification requirements were not sufficient to plot a curve, i.e., viscosity was specified at only one temperature or the hydraulic fluid had no viscosity requirements: VV-D-1078B, MIL-H-5559A(As), MIL-L-2104F, MIL-H-17672D, MIL-H-46001D.

1. Petroleum-Base Liquids
   MIL-F-17111B(OS)
   MIL-H-27601A(USAF)
   MIL-H-5606F
   MIL-H-6083E
   MIL-H-81019D
   MIL-L-17331H(SH)
   MIL-L-46167B
2. Synthetic Hydrocarbons
   MIL-H-46170B
   MIL-H-83282C
   MIL-H-87257
3. Glycol/Water Glycol
   MIL-H-22072C
   SAE J 1703
4. Silicone
   MIL-B-46176A
5. Polyphenyl Ether
   MIL-L-87100(USAF)
6. Polysiloxane
   MIL-S-81087C
7. Phosphate Ester
   MIL-H-19457D(SH)
8. Chlorotrifluoroethylene Polymer
   MIL-H-53119(ME)

Downloaded from http://www.everyspec.com

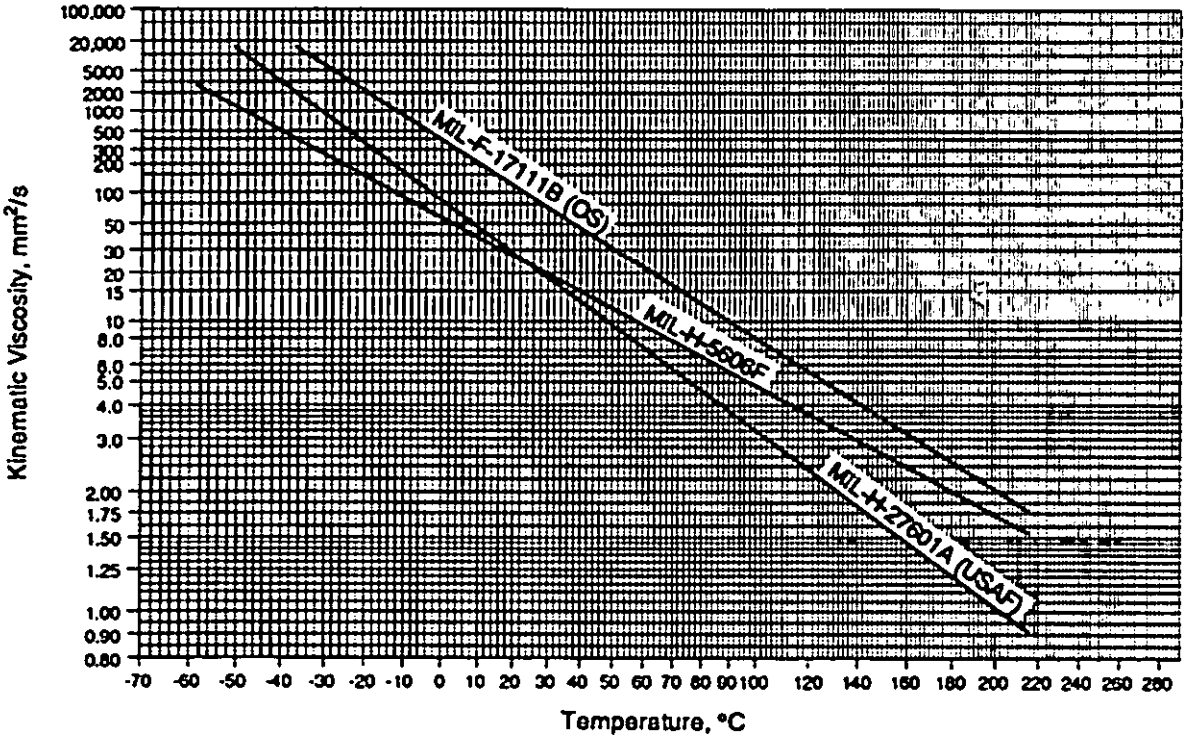

Figure 4-1. Viscosity-Temperature Graph of Petroleum-Base Liquids

Downloaded from http://www.everyspec.com

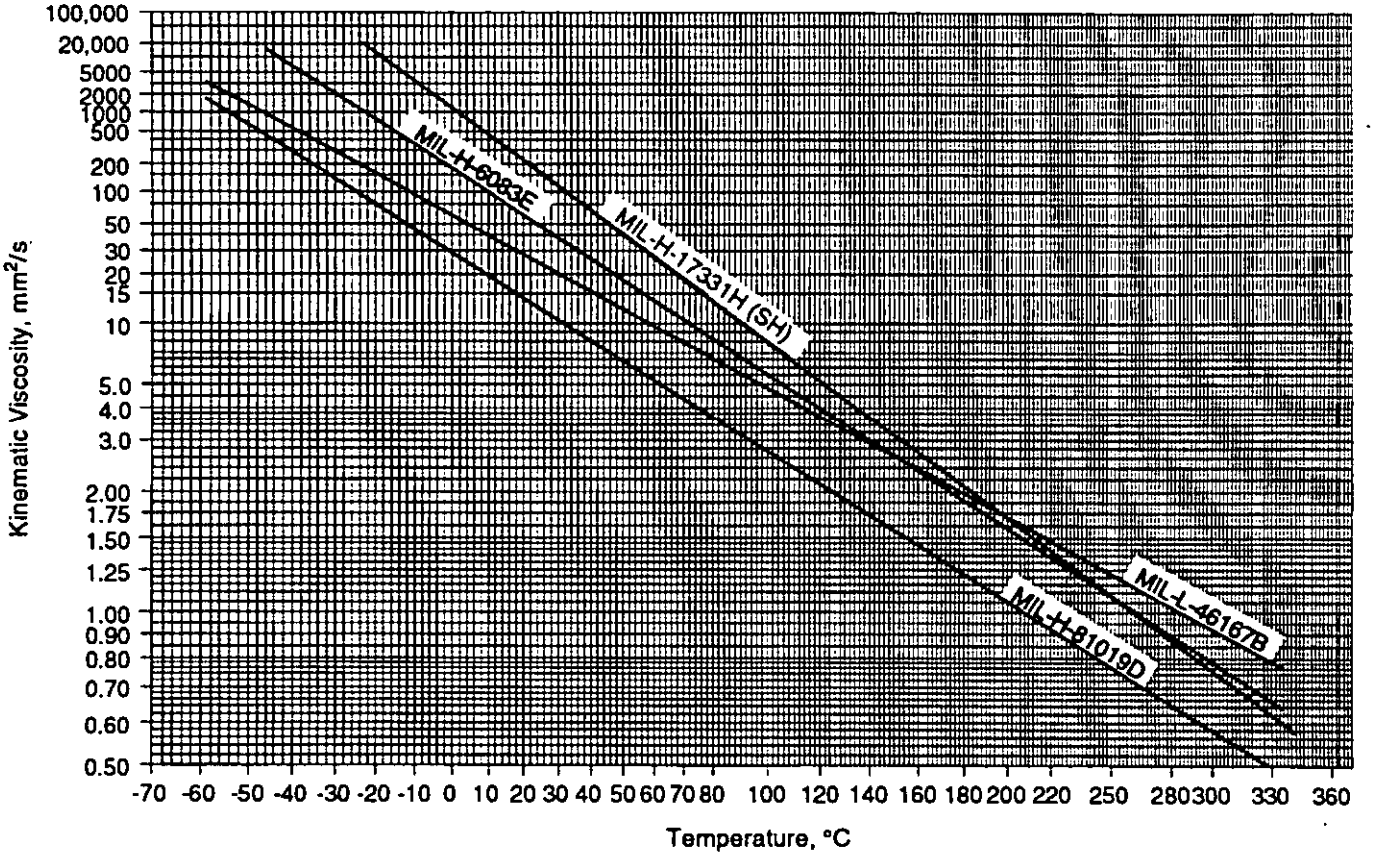

Figure 4-1 (cont'd)

Downloaded from http://www.everyspec.com

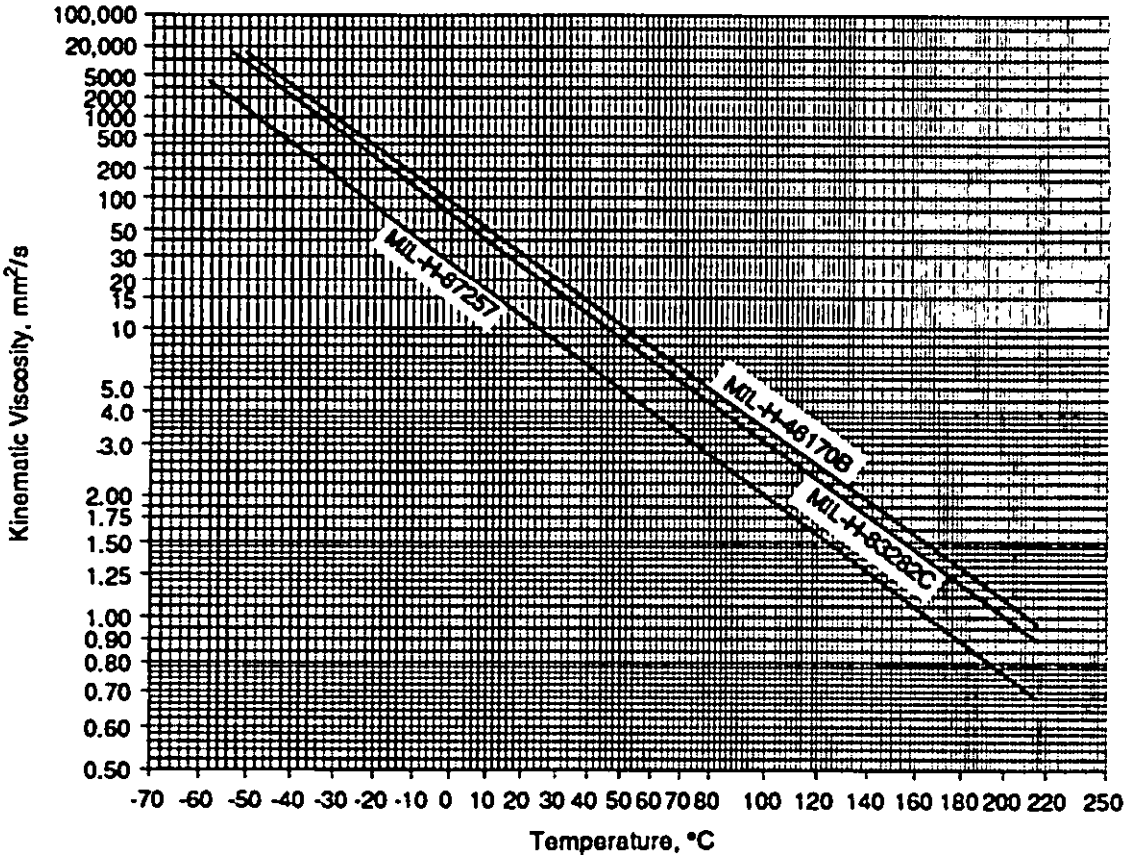

Figure 4-2. Viscosity-Temperature Graph of Synthetic Hydrocarbon Liquids

Downloaded from http://www.everyspec.com

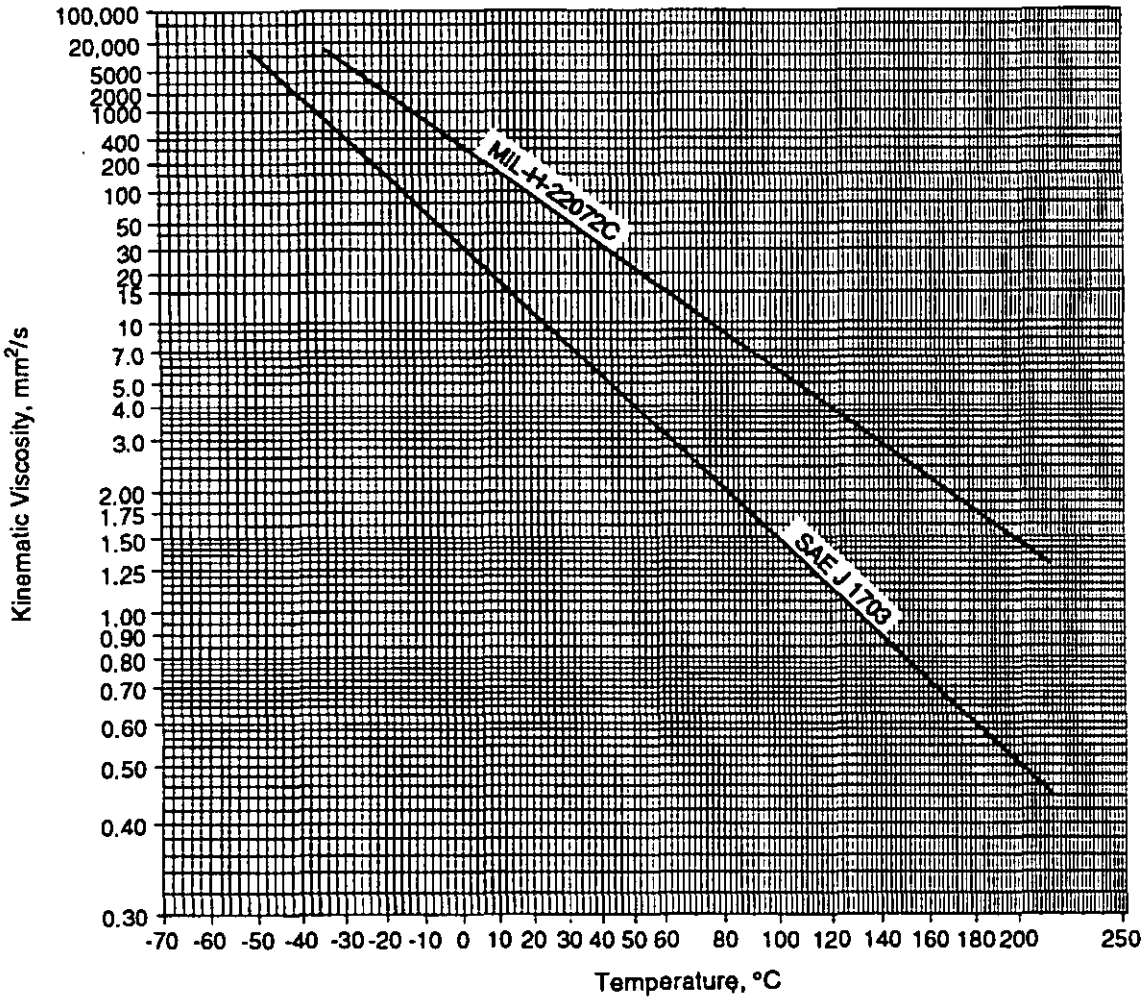

Figure 4-3. Viscosity-Temperature Graph of Glycol/Water-Glycol Liquids

Downloaded from http://www.everyspec.com

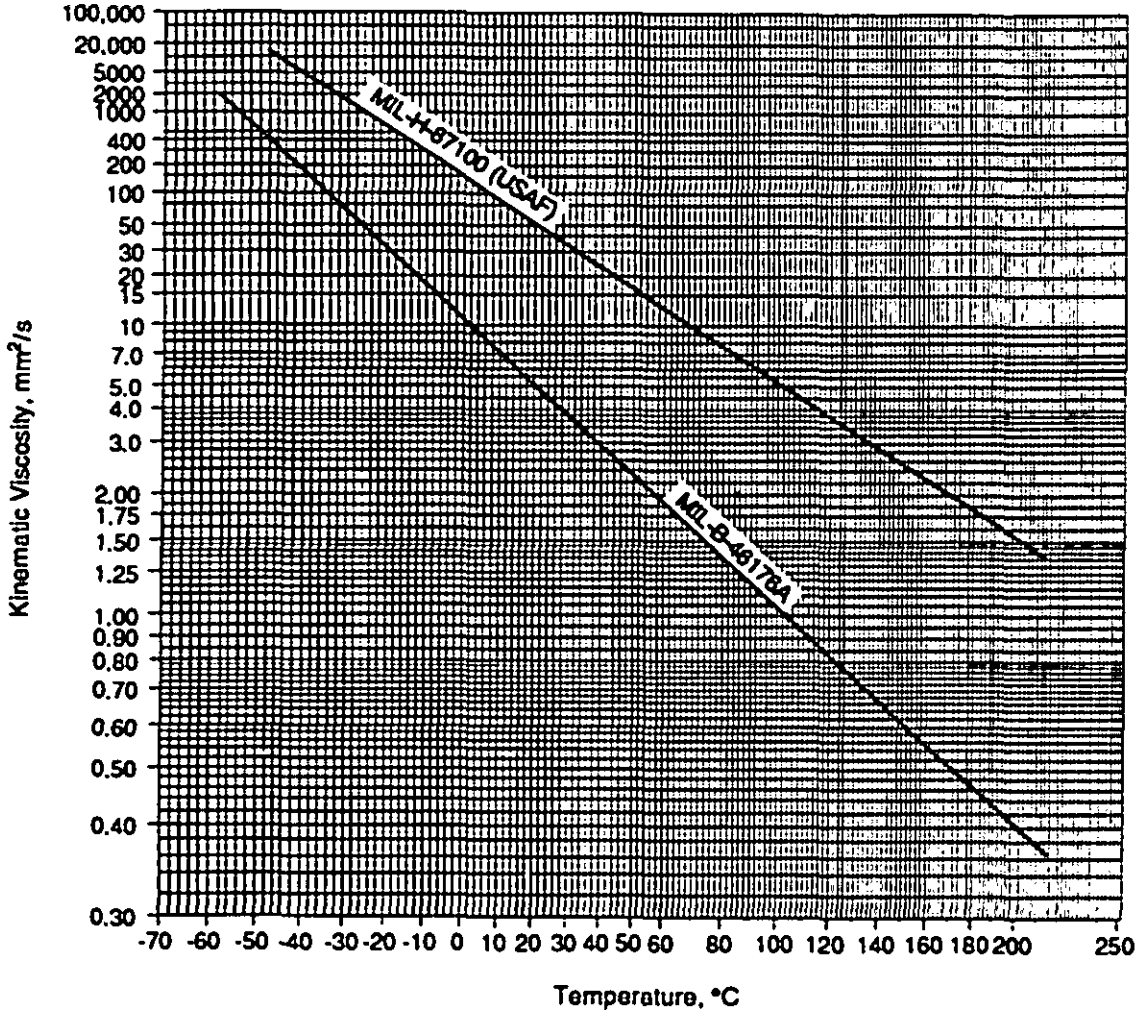

Figure 4-4. Viscosity-Temperature Graph of Silicone and Polyphenyl Ether Liquids

Downloaded from http://www.everyspec.com

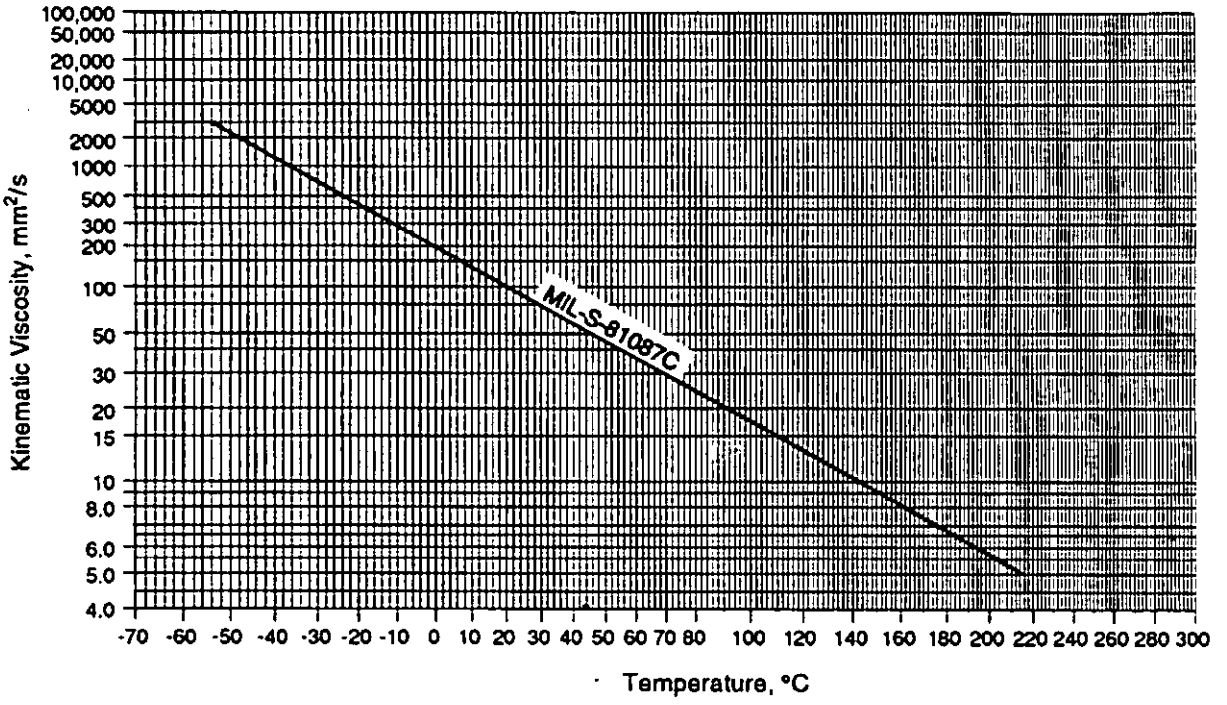

Figure 4-5. Viscosity-Temperature Graph of Polysiloxane Liquids

Downloaded from http://www.everyspec.com

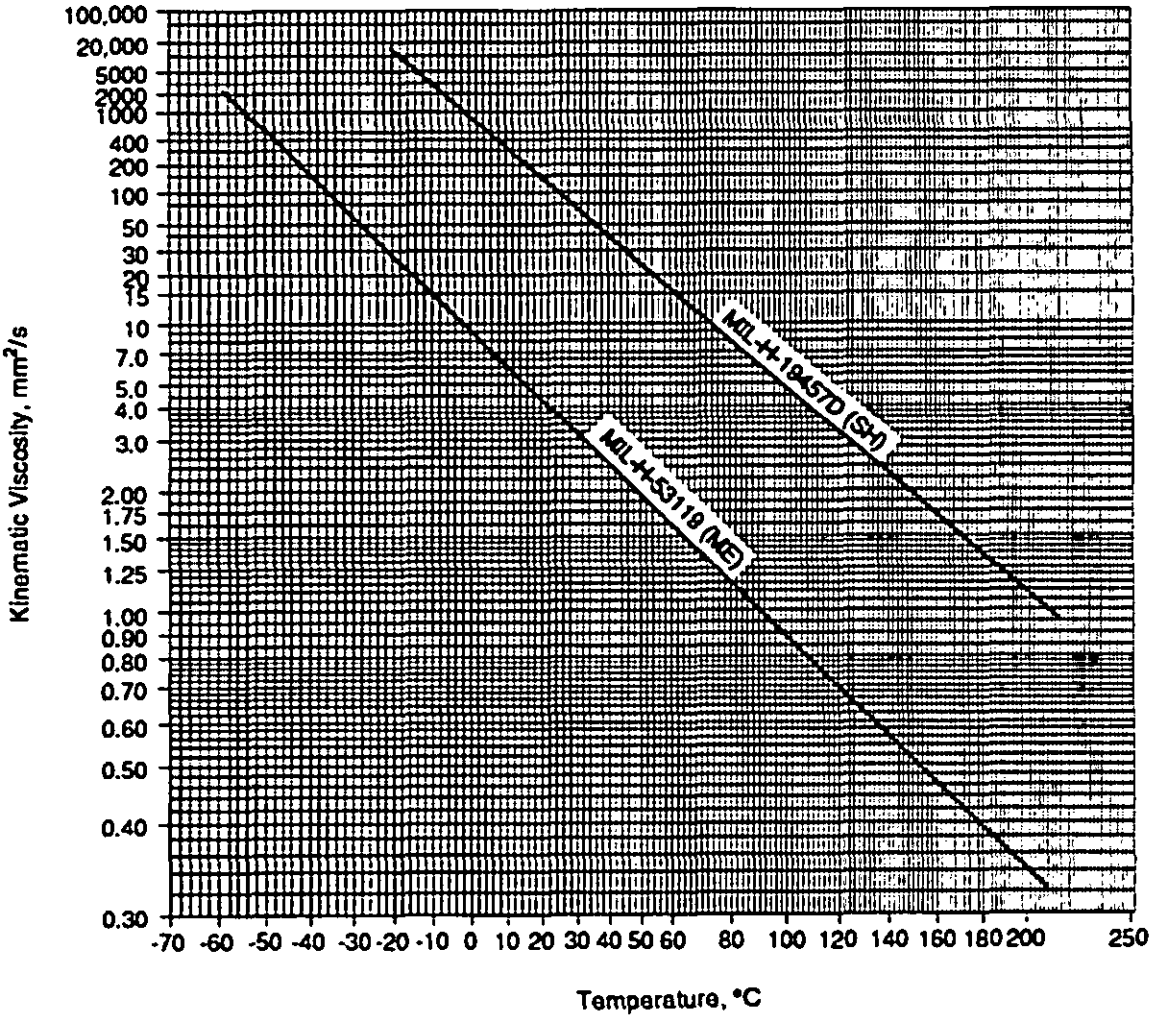

Figure 4-6. Viscosity-Temperature Graph of Phosphate Ester and CTFE Liquids

Downloaded from http://www.everyspec.com

TABLE 4-5. MIL-F-17111B (OS): POWER TRANSMISSION FLUID

PROPERTY	VALUE	TEST PROCEDURE
Color, max	2	ASTM D 1500
Specific Gravity	NR	
API Gravity, deg	NR	
Viscosity, mm^2/s		
–35°C (–31°F), max	1000	ASTM D 445
–20°C (–4°F), max	500	
40°C (104°F), min	25	
100°C (212°F), min	8	
Pour Point, °C (°F), max	–40 (–40)	ASTM D 97
Neutralization Number, mg KOH/g, max	0.3	ASTM D 974
Water Content, % max	0.0	ASTM D 95
Evaporation Loss, %, 6 h at 66°C (150°F)	20	ASTM D 972
Flash Point, °C (°F), open cup	104 (219)	ASTM D 92
Fire Point, °C (°F)	113 (235)	ASTM D 92
Autoignition, Temperature, °C (°F)	NR	
Bulk Modulus, Pa	NR	
Specific Heat, J/kg·K (Btu/lb·°F)	NR	
Thermal Conductivity, W/m·K (Btu·in./s·in.^{2}·°F)	NR	
Corrosiveness and Oxidation Stability, max		See par. 4.5.5 of fluid specification
mass change, mg/cm^2, 336 h at 93°C (199°F)		
Steel	NR	
Aluminum Alloy	NR	
Magnesium Alloy	NR	
Cadmium Plate	NR	
Copper		
Pitting, etching, and corrosion at 20x	None allowed	See fluid specification
Percent viscosity change at 99°C (210°F) and –18°C (0°F), max	25	ASTM D 445
Neutralization number increase, max	0.5	ASTM D 974
Insoluble material or gumming, weight	0.5	See fluid specification
Color, % max	5	ASTM D 1500
Shear Stability		
Viscosity change at 38°C (100°F), % max	5	See par. 4.5.6 of fluid specification
Neutralization number, change allowed	0.2	ASTM D 974

(cont'd on next page)

Downloaded from http://www.everyspec.com

TABLE 4-5 (cont'd)

PROPERTY	VALUE	TEST PROCEDURE
Thermal Stability, 37°C (98°F), for 72 h	No change to gelling, separation, or crystallization	See par. 4.5.3 of fluid specification
Rust Prevention	No evidence of rust	ASTM D 665
Rubber Swell, %	NR	
Lubricity, mm	1	ASTM D 2266
Foaming	NR	
Storage Stability	NR	

NR = Not Reported

Downloaded from http://www.everyspec.com

TABLE 4-6. MIL-H-17672D: HYDRAULIC FLUID, PETROLEUM, INHIBITED

PROPERTY	VALUE			TEST PROCEDURE
	2075-T-H	2110-T-H	2135-T-H	
Color	Report*	Report*	Report*	ASTM D 1500
Specific Gravity	NR	NR	NR	
API Gravity, deg	Report*	Report*	Report*	ASTM D 287
Viscosity, mm^2/s				
–54°C (–65°F), max	NR	NR	NR	
–40°C (–40°F), max	NR	NR	NR	
40°C (104°F), min	28.8-35.2	41.1-50.6	61.2-74.8	ASTM D 445
100°C (212°F), min	NR	NR	NR	
Pour Point, °C (°F), max	–29 (–20)	–23 (–10)	–18 (0)	ASTM D 97
Neutralization Number, mg KOH/g, max	0.20	0.20	0.20	ASTM D 974
Water Content, %	None	None	None	ASTM D 95
Evaporation Loss, %	NR	NR	NR	
Flash Point, °C (°F)	157 (315)	163 (325)	171 (340)	ASTM D 92
Fire Point, °C (°F)	NR	NR	NR	
Autoignition Temperature, °C (°F)	NR	NR	NR	
Bulk Modulus, Pa	NR	NR	NR	
Specific Heat, J/kg·K (Btu/lb·°F)	NR	NR	NR	
Thermal Conductivity, W/m·K (Btu·in/s·in.^{2}·°F)	NR	NR	NR	
Corrosion, Copper Strip at 100°C (212°F), mg, appearance max	1	1	1	ASTM D 130
Corrosiveness and Oxidation Stability, max mass change, mg/cm^2, 168 h				
Steel	NR	NR	NR	
Aluminum Alloy	NR	NR	NR	
Magnesium Alloy	NR	NR	NR	
Cadmium Plate	NR	NR	NR	
Copper	NR	NR	NR	
Pitting, etching, and corrosion at 20x	NR	NR	NR	
Percent viscosity change at 40°C	NR	NR	NR	
Neutralization number increase, max	NR	NR	NR	
Insoluble material or gumming	NR	NR	NR	

(cont'd on next page)

Downloaded from http://www.everyspec.com

TABLE 4-6 (cont'd)

PROPERTY	VALUE			TEST PROCEDURE
	2075-T-H	2110-T-H	2135-T-H	
Oxidation Test, time required to reach neutralization value of 2.0 mg KOH, h	1000	1000	1000	See fluid specification, Appendices A and C and ASTM D 943
After 1000 h				
Total sludge, max, mg	100	100	100	
Total iron, max, mg	100	100	100	
Total copper, max, mg	100	100	100	
Shear Stability	NR	NR	NR	
Thermal Stability	NR	NR	NR	
Copper Corrosion	NR	NR	NR	
Rust Prevention	NR	NR	NR	
Rubber Swell, %	NR	NR	NR	
Lubricity, mm	NR	NR	NR	
Foaming, Tendency/stability, volume to collapse, mL	65	65	65	ASTM D 892
Storage Stability	NR	NR	NR	

NR = Not Reported
* Determination is made as a matter of product identification.

Downloaded from http://www.everyspec.com

TABLE 4-7. MIL-H-27601A (USAF): HYDRAULIC FLUID, PETROLEUM-BASE, HIGH-TEMPERATURE

PROPERTY	VALUE	TEST PROCEDURE
Color, min Saybolt	20	ASTM D 156
Specific Gravity, 15.6°C/15.6°C (60°F/60°F)	NR	ASTM D 287
Viscosity, mm^2/s		
–54°C (–65°F)	NR	ASTM D 445
–40°C (–40°F), max	4000	
–17.8°C (0°F)	385	
98.9°C (210°F)	3.2	
288°C (550°F)	NR	
Pour Point, °C (°F), max	–53.9°C (–65°F)	ASTM D 97
Neutralization Number, mg KOH/g, max	0.10	Fed Std 791C Method 5105
Water Content, %, max	0.01	ASTM D 1744
Evaporation Loss, %	NR	
Flash Point, min, °C (°F)	182.2°C (360°F)	ASTM D 92
Fire Point, °C (°F)	NR	
Autoignition Temperature, °C (°F)	NR	
Bulk Modulus, isothermal		See fluid specification, subpar. 4.5.7
Secant, 0 to 6.9×10^4 kPa (0 to 10,000 psi) at 37.8°C (100°F), kPa (psi), min	1.379×10^6 (200,000)	
Specific Heat, J/kg·K (Btu/lb·°F) at 93.3°C (200°F) min	2.03×10^3 (0.484)	See fluid specification, subpar. 4.5.5
Thermal Conductivity, W/m·K (Btu·ft/h·ft^2·°F) at 204°C (400°F), min	0.11 (0.063)	See fluid specification, subpar. 4.5.6
Corrosiveness and Oxidation Stability, max mass change, mg/cm^2		See fluid specification, subpar. 4.5.1
Titanium	0.2	
Steel	0.2	
Silver	0.2	
Copper	0.6	
Pitting, etching, and corrosion at 20x	NR	
Percent viscosity change at 37.8°C (100°F)	–5 to +20	
Neutralization number increase, max	2.0	
Insoluble material, per 100 mL, g	0.1	
Shear Stability	NR	
Thermal Stability		
Viscosity change at 37.8°C (100°F), max %	25	See fluid specification, subpar. 4.5.2

(cont'd on next page)

Downloaded from http://www.everyspec.com

TABLE 4-7 (cont'd)

PROPERTY	VALUE	TEST PROCEDURE
Copper Corrosion	NR	
Rust Prevention	NR	
Rubber Swell, % synthetic rubber (MIL-R-25897) at 204 ± 1°C (400 ± 2°F) for 70 h	10	See fluid specification, subpar. 4.5.3
Lubricity, mm		Fed Std 791 Method 6514
Load kgf		
1	0.21	
10	0.30	
40	0.65	
Foaming	75	ASTM D 892
Tendency, mL, 5 min at		
23.9°C (75°F)	75	
93.3°C (200°F)	75	
23.9°C (75°F) after test at 93.3°C (200°F)	75	
Stability, 3 min at		
23.9°C (75°F)	Complete collapse	
93.3°C (200°F)	Complete collapse	
23.9°C (75°F) after test at 93.3°C (200°F)	Complete collapse	
Storage Stability	NR	

NR = Not Reported

Downloaded from http://www.everyspec.com

TABLE 4-8. MIL-H-46001D: HYDRAULIC FLUIDS, PETROLEUM-BASE, FOR MACHINE TOOLS

PROPERTY	VALUE				TEST PROCEDURE
	Grade 1	Grade 2	Grade 3	Grade 4	
Color	2.0	3.0	3.0	5.0	ASTM D 1500
API Gravity, deg at 15.5°C (59.9°F)	30 to 33	28 to 32	29 to 31	27 to 30	ASTM D 287
Viscosity, mm^2/s, 40°C (104°F)	28.8 to 35.2	41.4 to 50.6	61.2 to 74.8	135 to 165	ASTM D 445
Pour Point, °C (°F), max	−12 (10.4)	−12 (10.4)	−12 (10.4)	−6 (21.2)	ASTM D 97
Neutralization Number, mg KOH/g, max	1.5	1.5	1.5	0.2	ASTM D 664
Water Content, %	NR	NR	NR	NR	
Evaporation Loss, %	NR	NR	NR	NR	
Flash Point, °C (°F), min	188 (370.4)	196 (384.8)	196 (384.8)	221 (429.8)	ASTM D 92
Fire Point, °C (°F), min	216 (420.8)	218 (424.4)	218 (424.4)	246 (474.8)	ASTM D 92
Autoignition Temperature, °C (°F)	NR	NR	NR	NR	
Bulk Modulus, Pa	NR	NR	NR	NR	
Specific Heat, J/kg·K (Btu/lb·°F)	NR	NR	NR	NR	
Thermal Conductivity, W/m·K (Btu·in./s·in.^{2}·°F)	NR	NR	NR	NR	
Corrosiveness and Oxidation Stability	NR	NR	NR	NR	
Shear Stability	NR	NR	NR	NR	
Thermal Stability					Cincinnati Milacron, Procedure A
Percent Viscosity Change, max	±5	±5	±5	±5	
Neutralization Number Change, mg KOH/g, max	±0.75	±0.75	±0.75	±0.15	
Precipitate or Sludge, mg/100 mL, max	25	25	25	25	
Steel Rod:					
Visual Condition	NR	NR	NR	NR	
Deposit, mg, max	3.5	3.5	3.5	3.5	
Metal removed, mg/200 mL, max	1.0	1.0	1.0	1.0	
Copper Rod:					
Visual Condition	5	5	5	5	
Metal Removed, mg/200 mL, max	10.0	10.0	10.0	10.0	

(cont'd on next page)

Downloaded from http://www.everyspec.com

TABLE 4-8 (cont'd)

PROPERTY	VALUE				TEST PROCEDURE
	Grade 1	Grade 2	Grade 3	Grade 4	
Copper Corrosion	NR	NR	NR	NR	
Rust Prevention, 24 h	Pass	Pass	Pass	Pass	
Rubber Swell, %	NR	NR	NR	NR	
Lubricity, mm	NR	NR	NR	NR	
Foaming					ASTM D 892
Tendency, mL, 5 min at					
24°C (75°F)	No limit	No limit	No limit	No limit	
93.5°C (200°F)	No limit	No limit	No limit	No limit	
24°C (75°F) after test at 93.5°C (200°F)	No limit	No limit	No limit	No limit	
Stability, 3 min at					
24°C (75°F)	Complete collapse	Complete collapse	Complete collapse	Complete collapse	
93.5°C (200°F)	Complete collapse	Complete collapse	Complete collapse	Complete collapse	
24°C (75°F) after test at 93.5°C (200°F)	Complete collapse	Complete collapse	Complete collapse	Complete collapse	
Storage Stability	NR	NR	NR	NR	

NR = Not Reported

Downloaded from http://www.everyspec.com

TABLE 4-9. MIL-H-5606F: HYDRAULIC FLUID, PETROLEUM-BASE, AIRCRAFT, MISSILE, AND ORDNANCE

PROPERTY	VALUE	TEST PROCEDURE
Color	Red	
Specific Gravity 15.6°C/15.6°C (60.0°F/60.0°F)	NR	ASTM D 287
Viscosity, mm^2/s		
–54°C (–65°F), max	2500	ASTM D 445
–40°C (–40°F), max	600	ASTM D 445
40°C (104°F), min	13.2	ASTM D 445
100°C (212°F), min	4.90	ASTM D 445
Pour Point, °C (°F), max	–60 (–76)	ASTM D 97
Neutralization Number, mg KOH/g, max	0.20	ASTM D 664
Water Content, ppm, max	100	ASTM D 1744
Evaporation Loss, %, 6 h at 71°C (159.8°F)	20	ASTM D 972
Flash Point, °C (°F), min	82 (179.6)	ASTM D 93
Fire Point, °C (°F)	NR	
Autoignition Temperature, °C (°F)	NR	
Bulk Modulus, Pa	NR	
Specific Heat, J/kg·K (Btu/lb·°F)	NR	
Thermal Conductivity, W/m·K (Btu·in./s·in.^{2}·°F)	NR	
Corrosiveness and Oxidation Stability, max mass change, mg/cm^2, 135 ± 1°C (275 ± 2°F)		ASTM D 4636
Steel	±0.2	
Aluminum Alloy	±0.2	
Magnesium Alloy	±0.2	
Cadmium-Plated Steel	±0.2	
Copper	±0.6	
Pitting, etching, and corrosion at 20x	None	
Percent viscosity change at 40°C (104°F)	–5 or +20	
Neutralization number increase, max	0.2	
Insoluble material or gumming	None	
Shear Stability		
Percent viscosity change at 40°C (104°F) and –40°C (–40°F)	No change from reference fluid	See fluid specification, subpar. 4.5.5
Neutralization number increase, max	0.2	
Thermal Stability	NR	

(cont'd on next page)

Downloaded from http://www.everyspec.com

TABLE 4-9 (cont'd)

PROPERTY	VALUE	TEST PROCEDURE
Copper Strip Corrosion, max 72 h at 135 ± 1°C (275 ± 2°F)	No. 2e	ASTM D 130
Rust Prevention	NR	
Rubber Swell, %	19.0-30.0	Fed Std 791 C Method 3603
Lubricity, (average wear scar), max, mm	1.0	ASTM D 4172 Condition B
Foaming, 24°C (75.2°F)		ASTM D 892
Tendency, mL, at end of 5 min, max	65 mL	
Stability, mL, at end of 10 min	Complete collapse	
Storage Stability	No separation or crystallization; must meet as new requirements after 12 months storage	Fed Std 791 C Method 3465

NR = Not Reported

Downloaded from http://www.everyspec.com

TABLE 4-10. MIL-H-6083E: HYDRAULIC FLUID, PETROLEUM-BASE, FOR PRESERVATION AND OPERATION

PROPERTY	VALUE	TEST PROCEDURE
Color	Red	
Specific Gravity, 15.6°C/15.6°C (60.0°F/60.0°F)	±0.008 from original sample	ASTM D 1298
Viscosity, mm^2/s		
–54°C (–65°F), max	3500	ASTM D 445
–40°C (–40°F), max	800	
40°C (104°F), min	13	
Pour Point, °C (°F)	–59 (–74.2)	ASTM D 97
Neutralization Number, mg KOH/g, max	0.20	ASTM D 664
Water Content, %, max	0.05	ASTM D 1744
Evaporation Loss, %, 22 h at 100°C (212°F)	70	ASTM D 972
Flash Point, °C (°F), min	82 (179.6)	ASTM D 93
Fire Point, °C (°F)	NR	
Autoignition Temperature, °C (°F)	NR	
Bulk Modulus, Pa	NR	
Specific Heat, J/kg·K (Btu/lb·°F)	NR	
Thermal Conductivity, W/m·K (Btu·in./s·in.^{2}·°F)	NR	
Corrosiveness and Oxidation Stability, max mass change, mg/cm^2, 168 h at 121°C (249.8°F)		Fed Std 791 C Method 5308
Steel	±0.2	
Aluminum Alloy	±0.2	
Magnesium Alloy	±0.2	
Cadmium-Plated Steel	±0.2	
Copper	±0.6	
Pitting, etching, and corrosion at 20x	None	
Percent viscosity change at °40 C	–5 or +20	
Neutralization number increase, max	0.2	
Insoluble material or gumming	None	
Shear Stability		
Percent viscosity change at 40°C (104°F)	2	See fluid specification, subpar. 4.6.4
Thermal Stability	NR	
Copper Strip Corrosion, max, 72 h at 100°C (212°F)	Less than 3a	ASTM D 130

(cont'd on next page)

Downloaded from http://www.everyspec.com

TABLE 4-10 (cont'd)

PROPERTY	VALUE	TEST PROCEDURE
Rust Prevention	NR	
Rubber Swell, %	19.0 to 28.0	Fed Std 791 C Method 3603
Lubricity (average wear scar), mm	1.0	ASTM D 4172
Foaming		ASTM D 892
Tendency, mL at end of 5 min, max		
24°C (75.2°F)	65 mL	
94°C (201.2°F)	65 mL	
24°C (75.2°F) after test at 94°C (201°F)	65 mL	
Stability, mL at end of 10 min		
24°C (75.2°F)	Complete collapse	
94°C (201.2°F)	Complete collapse	
24°C (75.2°F) after test at 94°C (201.2°F)	Complete collapse	
Storage Stability	No separation or crystallization; must meet as new requirements after 12 months storage	Fed Std 791 C Method 3465

NR = Not Reported

Downloaded from http://www.everyspec.com

TABLE 4-11. MIL-H-81019D: HYDRAULIC FLUID, PETROLEUM-BASE; ULTRA LOW TEMPERATURE, METRIC

PROPERTY	VALUE	TEST PROCEDURE
Color	Red	
Specific Gravity	NR	
Viscosity, mm^2/s		
–70°C (–94°F), max	0.008	ASTM D 445
–54°C (–65°F), max	800×10^{-6}	
40°C (104°F), min	7.0×10^{-6}	
100°C (212°F), min	2.5×10^{-6}	
Pour Point, °C (°F), max	–75 (–103)	ASTM D 97
Neutralization Number, mg KOH/g, max	0.20	ASTM D 664
Water Content, ppm, max	200	ASTM D 1744
Evaporation Loss, %, max 4 h at 70 ± 1°C (158 ± 2°F)	12	ASTM D 972
Flash Point, °C (°F), min	95 (203)	ASTM D 92
Fire Point, °C (°F)	110 (230)	ASTM D 92
Autoignition Temperature, °C (°F)	NR	
Bulk Modulus, Pa	NR	
Specific Heat, J/kg·K (Btu/lb·°F)	NR	
Thermal Conductivity, W/m·K (Btu·in./s·in.^{2}·°F)	NR	
Corrosiveness and Oxidation Stability, max mass change, mg/cm^2, 168 h at 121°C (249.8°F)		Fed Std 791 C Method 5308
Steel	±0.2	
Aluminum Alloy	±0.2	
Magnesium Alloy	±0.2	
Cadmium Plate	±0.2	
Copper	±0.6	
Pitting, etching, and corrosion at 20x	None	
Percent viscosity change at °40 C (104°F)	–5 or +20	
Neutralization number increase max	0.2	
Insoluble material or gumming	None	
Shear Stability		
Percent viscosity change at 40°C (104°F) –40°C (–40°F)	No change from reference fluid	ASTM D 892
Neutralization number increase	0.2	
Thermal Stability	NR	
Copper Strip Corrosion, max, 72 h at 120 ± 3°C (248 ± 6°F)	Less than 2	Fed Std 791 C Method 5325

(cont'd on next page)

Downloaded from http://www.everyspec.com

TABLE 4-11 (cont'd)

PROPERTY	VALUE	TEST PROCEDURE
Rust Prevention	NR	
Rubber Swell, %	19.0 to 28.0	Fed Std 791 C Method 3603
Lubricity, mm, max	1.0	ASTM D 4172
Foaming, at 25°C (77°F)		ASTM D 892
Foam volume, mL at end of		
5 min blowing period, max	65	
10 min settling period	Complete collapse	
Storage Stability	No separation or crystallization; must meet as new requirements after 12 months storage	Fed Std 791 C Method 3465

NR = Not Reported

Downloaded from http://www.everyspec.com

TABLE 4-12. MIL-L-17331H(SH): LUBRICATING OIL, STEAM TURBINE AND GEAR, MODERATE SERVICE

PROPERTY	VALUE	TEST PROCEDURE
Color	NR	
Specific Gravity	NR	
Viscosity, mm^2/s		
4.4°C (40°F), max	870	ASTM D 445
40°C (104°F)	74-97	
100°C (212°F), min	8.0	
Pour Point, °C (°F), max	-6 (20)	ASTM D 97
Neutralization Number, mg KOH/g, max	0.30	ASTM D 974
Water Content, %	None	ASTM D 95
Evaporation Loss, %	NR	
Flash Point, °C (°F), min	204 (400)	ASTM D 92
Fire Point, °C (°F)	NR	
Autoignition Temperature, °C (°F)	NR	
Bulk Modulus, Pa	NR	
Specific Heat, J/kg·K (Btu/lb·°F)	NR	
Thermal Conductivity, W/m·K (Btu·in./s·in.^{2}·°F)	NR	
Oxidation Test, time required to reach neutralization value of 2.0 mg KOH, h	1000	
After 1000 h:		
Total sludge, max mg	100	
Total iron, max mg	100	
Total copper, max mg	100	
Corrosiveness and Oxidation Stability, max mass change, mg/cm^2, 168 h at (give conditions and test metals)		
Steel	NR	
Aluminum Alloy	NR	
Magnesium Alloy	NR	
Cadmium Plate	NR	
Copper	NR	
Pitting, etching, and corrosion at 20x	NR	
Percent viscosity change at °40 C	NR	
Neutralization number increase, max	NR	
Insoluble material or gumming	NR	
Shear Stability	NR	
Thermal Stability	NR	

(cont'd on next page)

Downloaded from http://www.everyspec.com

TABLE 4-12 (cont'd)

PROPERTY	VALUE	TEST PROCEDURE
Copper Corrosion at 100°C (212°F), appearance, max	1	ASTM D 130
Rust Prevention	NR	
Rubber Swell, %	NR	
Lubricity, mm, (15 kgf)	0.33	Fed Std 791 C Method 6503
Foaming		ASTM D 892 (Option A shall not be used.)
Tendency/Stability		
Sequence 1, mL, max	65/0	
Sequence 2, mL, max	65/0	
Sequence 3, mL, max	65/0	
Storage Stability	NR	

NR = Not Reported

Downloaded from http://www.everyspec.com

TABLE 4-13. MIL-L-2104F: LUBRICATING OIL, INTERNAL COMBUSTION ENGINE, TACTICAL SERVICE

PROPERTY	VALUE				TEST PROCEDURE
	Grade 10W	Grade 30	Grade 40	Grade 15W-40	
Color	NR	NR	NR	NR	
API Gravity, deg	NR	NR	NR	NR	
Viscosity, mm^2/s, 100°C (212°F)	5.6-<7.4	9.3-<12.5	12.5-<16.3	12.5-<16.3	ASTM D 445
Pour Point, °C (°F), max	−30 (−22)	−18 (0)	−15 (5)	−23 (−9.4)	ASTM D 97
Neutralization Number, mg KOH/g, max	NR	NR	NR	NR	ASTM D 664
Water Content, %	NR	NR	NR	NR	
Evaporation Loss, %	NR	NR	NR	NR	
Flash Point, °C (°F), min	205 (400)	220 (428)	225 (437)	215 (419)	ASTM D 92
Fire Point, °C (°F)	NR	NR	NR	NR	
Autoignition Temperature, °C (°F)	NR	NR	NR	NR	
Bulk Modulus, Pa	NR	NR	NR	NR	
Specific Heat, J/kg·K (Btu/lb·°F)	NR	NR	NR	NR	
Thermal Conductivity, W/m·K (Btu·in./s·in.^{2}·°F)	NR	NR	NR	NR	
Corrosiveness and Oxidation Stability*	NR	NR	NR	NR	
Shear Stability	NR	NR	NR	No change in viscosity	See fluid specification, subpar. 4.6.2
Thermal Stability*	NR	NR	NR	NR	
Copper Corrosion*	NR	NR	NR	NR	
Rust Prevention*	NR	NR	NR	NR	
Rubber Swell, % (Buna N)	NR	NR	NR	NR	
Lubricity, mm*	NR	NR	NR	NR	

(cont'd on next page)

Downloaded from http://www.everyspec.com

TABLE 4-13 (cont'd)

PROPERTY	VALUE				TEST PROCEDURE
	Grade 10W	Grade 30	Grade 40	Grade 15W-40	
Foaming					ASTM D 892
Tendency, mL, at end of 5 min, max					
24 ± 0.5°C (75.2 ± 1°F)	25	25	25	25	
93.5 ± 0.5°C (200.3 ± 1°F)	150	150	150	150	
24 ± 0.5°C (75.2 ± 1°F)	25	25	25	25	
Stability, mL, at end of 10 min					
24 ± 0.5°C (75.2 ± 1°F)	Complete collapse	Complete collapse	Complete collapse	Complete collapse	
93.5 ± 0.5°C (28.3 ± 1°F)	Complete collapse	Complete collapse	Complete collapse	Complete collapse	
24 ± 0.5°C (75.2 ± 1°F)	Complete collapse	Complete collapse	Complete collapse	Complete collapse	
Storage Stability*	NR	NR	NR	NR	

NR = Not Reported

* This fluid is primarily qualified as an engine lubricating oil and many of the standard hydraulic oil tests are not required to be performed. Thus the reader is referred to the specification to obtain specific engine test requirements.

Downloaded from http://www.everyspec.com

TABLE 4-14. MIL-L-46167B: LUBRICATING OIL, INTERNAL COMBUSTION ENGINE, ARCTIC

PROPERTY	VALUE	TEST PROCEDURE
Color	NR	
API Gravity	NR	
Viscosity, mm^2/s		
–55°C (–65°F), max	75,000	ASTM D 445
–40°C (–40°F), max	8800	
40°C (104°F), min	NR	
100°C (212°F), min	5.6	
Pour Point, °C (°F), max	–55 (–67)	ASTM D 97
Neutralization Number, mg KOH/g, max	NR	
Water Content, %	NR	
Evaporation Loss, %	NR	
Flash Point, °C (°F), min	220 (428)	
Fire Point, °C (°F)	NR	
Autoignition Temperature, °C (°F)	NR	
Bulk Modulus, Pa	NR	
Specific Heat, J/kg·K (Btu/lb·°F)	NR	
Thermal Conductivity, W/m·K (Btu·in./s·in.^{2}·°F)	NR	
Corrosiveness and Oxidation Stability*	NR	
Shear Stability	NR	
Thermal Stability*	NR	
Copper Corrosion*	NR	
Rust Prevention*	NR	
Rubber Swell, % (Buna N)	0 to 5	See fluid specifications, par. 4.6
Lubricity, mm*		
Foaming	NR	ASTM D 892
Tendency, mL at end of 5 min, max		
24 ± 0.5°C (75.2 ± 1°F)	25	
93.5 ± 0.5°C (200.3 ± 1°F)	150	
24 ± 0.5°C (75.2 ± 1°F)	25	

(cont'd on next page)

Downloaded from http://www.everyspec.com

TABLE 4-14 (cont'd)

PROPERTY	VALUE	TEST PROCEDURE
Stability, mL at end of 10 min		
24 ± 0.5°C (75.2 ± 1°F)	Complete collapse	
93.5 ± 0.5°C (200.3 ± 1°F)	Complete collapse	
24 ± 0.5°C (75.2 ± 1°F)	Complete collapse	
Storage Stability	NR	

NR = Not Reported

* This fluid is primarily qualified as an engine lubricating oil, and many of the standard hydraulic oil tests are not required to be performed. Thus, the reader is referred to the specification to obtain specific engine test requirements.

Downloaded from http://www.everyspec.com

TABLE 4-15. MIL-H-46170B: HYDRAULIC FLUID, RUST-INHIBITED, FIRE-RESISTANT SYNTHETIC HYDROCARBON-BASE

PROPERTY	VALUE	TEST PROCEDURE
Color	NR	
Specific Gravity	NR	
Viscosity, mm^2/s		
–54°C (–65°F)	NR	ASTM D 445
–40°C (–40°F), max	2600	
40°C (104°F), max	19.5	
100°C (212°F), min	3.4	
Pour Point, °C (°F), max	–54 (–65)	ASTM D 97
Neutralization Number, mg KOH/g, max	0.2	ASTM D 974
Water Content, %	0.05	
Evaporation Loss, %, max (22 h at 149°C (300°F))	5.0	ASTM D 972
Flash Point, °C (°F), min		
Type I	218 (424)	ASTM D 92
Type II	204 (400)	
Fire Point, °C (°F)	246 (475)	ASTM D 92
Autoignition Temperature, °C (°F), min	343 (649)	ASTM E 659
Bulk Modulus, isothermal secant, 0 to 6.9×10^4 kPa (0 to 10,000 psi) at 40°C (104°F), kPa (psi), min	1.379×10^6 (200,000)	See fluid specification, subpar. 4.6.3
Specific Heat, J/kg·K (Btu/lb·°F)	NR	
Thermal Conductivity, W/m·K (Btu·in./s·in.^{2}·°F)	NR	
Corrosiveness and Oxidation Stability, max mass change, mg/cm^2, 168 h at 121°C (250°F)		Fed Std 791 C Method 5308
Steel	±0.2	
Aluminum Alloy	±0.2	
Magnesium Alloy	±0.2	
Cadmium-Plated Steel	±0.2	
Copper	±0.6	
Pitting, etching, and corrosion at 20x	None	
Percent viscosity change at 40°C (104°F), max	+10	
Neutralization number increase, max	0.30	
Insoluble material or gumming	None	
Shear Stability	NR	
Thermal Stability	NR	
Copper Corrosion	NR	

(cont'd on next page)

Downloaded from http://www.everyspec.com

TABLE 4-15 (cont'd)

PROPERTY	VALUE	TEST PROCEDURE
Rust Prevention, 100 ± 1 h, at 49 ± 1°C (120 ± 2°F)	Protection for sandblasted and polished steel	ASTM D 1748
Rubber Swell, %, synthetic rubber NBR-L	15 to 25	Fed Std 791 C Method 3603
Lubricity, mm, max		ASTM D 2266
10 kgf load	0.30	
40 kgf load	0.65	
Foaming	NR	ASTM D 892
Tendency, mL at end of 5 min, max		
24°C (75.2°F)	65	
94°C (201.2°F)	65	
24°C (75.2°F) after test at 94°C (201.2°F)	65	
Stability, mL, at end of 10 min		
24°C (75.2°F)	Complete collapse	
94°C (201.2°F)	Complete collapse	
24°C (75.2°F) after test at 94°C (201.2°F)	Complete collapse	
Storage Stability, after 12 months	No separation; no crystallization; clear and transparent	Fed Std 791 C Method 3465

NR = Not Reported

Downloaded from http://www.everyspec.com

TABLE 4-16. MIL-H-83282C: HYDRAULIC FLUID, FIRE-RESISTANT, SYNTHETIC HYDROCARBON-BASE, AIRCRAFT, METRIC

PROPERTY	VALUE	TEST PROCEDURE
Color	Red	
Specific Gravity	NR	
Viscosity, mm^2/s		
–40°C (–40°F), max	2200	ASTM D 445
40°C (104°F), min	14.0	
100°C (212°F), min	3.45	
205°C (401°F), min	1.0	
Pour Point, °C (°F), max	–55 (–67)	ASTM D 97
Neutralization Number, mg KOH/g, max	0.1	ASTM D 664
Water Content, ppm, max	100	ASTM D 1744
Evaporation Loss, %, max (65 h at 205°C (401°F))	20.0	Fed Std 791C Method 350
Flash Point, °C (°F), min	205 (401)	ASTM D 92
Fire Point, °C (°F), min	245 (473)	ASTM D 92
Autoignition Temperature, °C (°F), min	345 (653)	ASTM E 659
Bulk Modulus, isothermal secant, 0 to 6.9×10^4 kPa (0 to 10,000 psi) at 40°C (104°F), kPa (psi), min	1.379×10^6 (200,000)	See fluid specification, subpar. 4.5.4
Specific Heat, J/kg·K (Btu/lb·°F)	NR	
Thermal Conductivity, W/m·K (Btu·in./s·in.^{2}·°F)	NR	
Corrosiveness and Oxidation Stability, max mass change, mg/cm^2, 168 h at 135°C (275°F)		Fed Std 791C Method 5308
Steel	±0.2	
Aluminum Alloy	±0.2	
Magnesium Alloy	±0.2	
Cadmium-Plated Steel	±0.2	
Copper	±0.6	
Pitting, etching, and corrosion at 20x	None	
Percent viscosity change at 40°C (104°F), max	10	
Neutralization number increase, max	0.20	
Insoluble material or gumming	None	
Shear Stability	NR	
Thermal Stability	NR	
Copper Corrosion	NR	
Rust Prevention	NR	

(cont'd on next page)

Downloaded from http://www.everyspec.com

TABLE 4-16 (cont'd)

PROPERTY	VALUE	TEST PROCEDURE
Rubber Swell, %, NBR-L	18.0-30.0	Fed Std 791 C Method 3603
Lubricity, mm, max		ASTM D 4172
1 kgf load	0.21	
10 kgf load	0.30	
40 kgf load	0.65	
Foaming, at 25°C (77°F)		ASTM D 892
Tendency, mL at end of 5 min, max	65	
Stability, mL, at end of 10 min	Complete collapse	
Storage Stability, after 12 months	No separation; no crystallization; clear and transparent	Fed Std 791 C Method 3465

NR = Not Reported

Downloaded from http://www.everyspec.com

TABLE 4-17. MIL-H-87257: HYDRAULIC FLUID, FIRE-RESISTANT, LOW-TEMPERATURE, SYNTHETIC HYDROCARBON-BASE, AIRCRAFT AND MISSILE

PROPERTY	VALUE	TEST PROCEDURE
Color	Red	
Specific Gravity	NR	
Viscosity, mm^2/s		
–54°C (–65°F), max	2500	ASTM D 445
–40°C (–40°F), max	550	
40°C (104°F), min	6.7	
100°C (212°F), min	2.0	
Pour Point, °C (°F), max	–60 (–76)	ASTM D 97
Neutralization Number, mg KOH/g, max	0.2	ASTM D 664
Water Content, ppm, max	100	ASTM D 1744
Evaporation Loss, %, max (6.5 h at 150°C (302°F))	20.0	Fed Std 791 C Method 350
Flash Point, °C (°F), min	160 (328)	ASTM D 92
Fire Point, °C (°F), min	170 (330)	ASTM D 92
Autoignition Temperature, °C (°F), min	NR	
Bulk Modulus, isothermal secant, 0 to 6.9×10^4 kPa (0 to 10,000 psi) at 40°C (104°F), kPa (psi), min	1.379×10^6 (200,000)	See fluid specification, subpar. 4.5.4
Specific Heat, J/kg·K (Btu/lb·°F)	NR	
Thermal Conductivity, W/m·K (Btu·in./s·in.^{2}·°F)	NR	
Corrosiveness and Oxidation Stability, max mass change, mg/cm^2, 168 h at 135°C (275°F)		ASTM D 4636
Steel	±0.2	
Aluminum Alloy	±0.2	
Magnesium Alloy	±0.2	
Cadmium-Plated Steel	±0.2	
Copper	±0.6	
Pitting, etching, and corrosion at 20x	None	
Percent viscosity change at 40°C (104°F), max	10	
Neutralization number increase, max	0.20	
Insoluble material or gumming	None	
Shear Stability	NR	
Thermal Stability	NR	
Rust Prevention	NR	

(cont'd on next page)

Downloaded from http://www.everyspec.com

TABLE 4-17 (cont'd)

PROPERTY	VALUE	TEST PROCEDURE
Rubber Swell, synthetic rubber NBR-L, %	19.0-30.0	Fed Std 791 C Method 3606
Lubricity, mm, max		ASTM D 4172
1 kgf load	0.21	
10 kgf load	0.30	
40 kgf load	0.65	
Foaming, at 25°C (77°F)		ASTM D 892
Tendency, mL at end of 5 min, max	65	
Stability, mL, at end of 10 min	Complete collapse	
Storage Stability, after 12 months	No separation; no crystallization; clear and transparent	Fed Std 791 C Method 3465

NR = Not Reported

Downloaded from http://www.everyspec.com

TABLE 4-18. MIL-H-22072 C(AS): HYDRAULIC FLUID, CATAPULT

PROPERTY	VALUE	TEST PROCEDURE
Color	1.5 to 2	ASTM D 1500
Specific Gravity, at 20°C (68°F)	1.04 to 1.09	ASTM D 1298
Viscosity, mm^2/s		
−18°C (0°F), max	1764	ASTM D 445
38°C (104°F), min	39.6 to 45.1	
54°C (130°F), min	21.7	
Pour Point, °C (°F)	NR	
Neutralization Number, mg KOH/g, max	NR	
Water Content, %	50 + 1.5 or −6.5	ASTM D 95
Evaporation Loss, after 4 h at 70 ± 3°C (158 ± 5°F)	Shall not become hard or resinous	See fluid specification, subpar. 4.6.5
Flash Point, °C (°F)	NR	
Fire Point, °C (°F)	NR	
Autoignition Temperature, °C (°F)	NR	
Bulk Modulus, Pa	NR	
Specific Heat, J/kg·K (Btu/lb·°F)	NR	
Thermal Conductivity, W/m·K (Btu·in./s·in.^{2}·°F)	NR	
Corrosiveness and Oxidation Stability, max mass change, mg/cm^2	NR	
Shear Stability	NR	
Thermal Stability	NR	
Copper Corrosion, (static) 70 ± 1°C (158 ± 2°F) for 720 h, weight change, max	4 mg	
Rubber Swell, %, 168 h at 70 ± 1°C (158 ± 2°F)	See Table II of fluid specification	Fed Std 601 Method 6211
Lubricity, mm	NR	
Foaming, after 10 min of collapse, mL, max	10	ASTM D 892
Storage Stability, 12 months at 25 ± 6°C (77 ± 10°F)	No formation of resinous gums or sludge; no fluid separation or change in fundamental color of color	See fluid specification, subpar. 4.6.12

NR = Not Reported

Downloaded from http://www.everyspec.com

TABLE 4-19. MIL-H-5559(AS): HYDRAULIC FLUID, ARRESTING GEAR

PROPERTY	VALUE	TEST PROCEDURE
Color	NR	
Specific Gravity, 15.6°C/15.6°C (60°F/60°F)	1.111 to 1.123	ASTM D 1122
Viscosity, mm^2/s 37.8°C (100°F)	9.0	Fed Std 791 C Method 305.4
Pour Point, °C (°F)	NR	
Neutralization Number, mg KOH/g, max	NR	
Water Content, %	NR	
Evaporation Loss, %	NR	
Flash Point, °C (°F)	NR	
Fire Point, °C (°F)	NR	
Autoignition Temperature, °C (°F)	NR	
Bulk Modulus, Pa	NR	
Specific Heat, J/kg·K (Btu/lb·°F)	NR	
Thermal Conductivity, W/m·K (Btu·in./s·in.^{2}·°F)	NR	
Corrosiveness and Oxidation Stability, max mass change, mg/cm^2	NR	
Shear Stability	NR	
Thermal Stability	NR	
Copper Corrosion	NR	
Rust Prevention	NR	
Rubber Swell, %	NR	
Lubricity, mm	NR	
Foaming	NR	
Storage Stability	NR	

NR = Not Reported

Downloaded from http://www.everyspec.com

TABLE 4-20. SAE J 1703: MOTOR VEHICLE BRAKE FLUID

PROPERTY	VALUE	TEST PROCEDURE
Color	NR	
Specific Gravity	NR	
Viscosity, mm^2/s		
–40°C (–40°F), max	1800	ASTM D 445
100°C (212°F), min	1.5	
Pour Point, °C (°F), max	NR	
Neutralization Number, mg KOH/g, max	NR	
Water Content, %	NR	
Evaporation Loss, %, max 168 h ± 2 h and 100 ± 2°C (212 ± 3.6°F)	80	See fluid specification, subpar. 4.7
Flash Point, °C (°F)	NR	
Fire Point, °C (°F)	NR	
Autoignition Temperature, °C (°F), min	NR	
Bulk Modulus, Pa	NR	
Specific Heat, J/kg·K (Btu/lb·°F)	NR	
Thermal Conductivity, W/m·K (Btu·in./s·in.^{2}·°F)	NR	
Corrosiveness and Oxidation Stability, max mass change, mg/cm^2, 70 ± 2°C (158 ± 3.6°F) for 120 ± 10 min		See fluid specification, subpar. 4.5
Steel	0.2	
Aluminum Alloy	0.1	
Cast Iron	0.2	
Brass	0.4	
Copper	0.4	
Pitting, etching, and corrosion at 20x	NR	
Percent viscosity change at 40°C (104°F), max	NR	
Neutralization number increase, max	NR	
Insoluble material or gumming	NR	
Shear Stability	NR	
Thermal Stability	NR	
Copper Corrosion	NR	
Rust Prevention	NR	
Rubber Swell, %	*	

(cont'd on next page)

Downloaded from http://www.everyspec.com

TABLE 4-20 (cont'd)

PROPERTY	VALUE	TEST PROCEDURE
Lubricity, mm, max	NR	
Foaming	NR	
Storage Stability	NR	

NR = Not Reported
* Many material compatibility tests are required; see fluid specification.

Downloaded from http://www.everyspec.com

TABLE 4-21. MIL-B-46176A: BRAKE FLUID, SILICONE, AUTOMOTIVE, ALL-WEATHER, OPERATIONAL AND PRESERVATIVE, METRIC

PROPERTY	VALUE	TEST PROCEDURE
Color	Bluish Purple	
Specific Gravity	NR	
Viscosity, mm^2/s		
-55°C (-67°F)	≤900	ASTM D 445
100°C (212°F)	≥1.3	
Pour Point, °C (°F), max	NR	
Neutralization Number, mg KOH/g, max	NR	
Water Content, %	NR	
Evaporation Loss, %	NR	
Flash Point, °C (°F)	204 (400)	ASTM D 92
Fire Point, °C (°F)	NR	
Autoignition Temperature, °C (°F)	NR	
Bulk Modulus, Pa	NR	
Specific Heat, J/kg·K (Btu/lb·°F)	NR	
Thermal Conductivity, W/m·K (Btu·in./s·in.^{2}·°F)	NR	
Corrosiveness and Oxidation Stability, max mass change, mg/cm^2, 100 ± 2°C (212 ± 4°F) for 120 ± 10 min		See fluid specification, subpar. 4.6.5
Steel	0.1	
Aluminum Alloy	0.1	
Cast Iron	0.1	
Brass	0.2	
Copper	0.2	
Pitting, etching, and corrosion at 20x	NR	
Percent viscosity change at 40°C (104°F), max	NR	
Neutralization number increase, max	NR	
Insoluble material or gumming	NR	
Shear Stability	NR	
Thermal Stability	NR	
Copper Corrosion	NR	
Rust Prevention	NR	
Rubber Swell, %	*	

(cont'd on next page)

Downloaded from http://www.everyspec.com

TABLE 4-21 (cont'd)

PROPERTY	VALUE	TEST PROCEDURE
Lubricity, mm, max	NR	
Foaming	NR	
Storage Stability	NR	

NR = Not Reported
* Extensive rubber swell information is given in Table 2 of MIL-B-46176A, and the reader is referred to that table.

Downloaded from http://www.everyspec.com

TABLE 4-22. MIL-L-87100 (USAF): LUBRICATING OIL, AIRCRAFT TURBINE ENGINE, POLYPHENYL-ETHER-BASE

PROPERTY	VALUE	TEST PROCEDURE
Color	NR	
Specific Gravity at 38°C (100°F)/16°C (60°F)	1.180 to 1.200	ASTM D 1298
Viscosity, mm^2/s		
–51°C (–60°F), max	17,000	ASTM D 445
37.8°C (100°F)	330 to 375	
98.9°C (210°F), min	12.5	
260°C (500°F), min	1.0	
Pour Point, °C (°F), max	5 (41)	ASTM D 92
Neutralization Number, mg KOH/g, max	0.05	ASTM D 664
Water Content, %	NR	
Evaporation Loss, %		
6 h at 300°C (572°F), max	35	ASTM D 972
6 h at 260°C (500°F), max	15	
Flash Point, °C (°F), min	275 (527)	ASTM D 92
Fire Point, °C (°F)	NR	
Autoignition Temperature, °C (°F), min	610 (1130)	ASTM D 2155
Bulk Modulus, Pa	NR	
Specific Heat, kJ/kg·°C (Btu/lb·°F)		
260°C (500°F), min	0.45 (0.11)	ASTM D 2766
160°C (320°F), min	0.40 (0.10)	
60°C (140°F), min	0.35 (0.08)	
Thermal Conductivity, W/m·K (Btu·in./s·in.^{2}·°F)	NR	
Corrosiveness and Oxidation Stability, max		Fed Std 791
mass change, mg/cm^2, 48 h at 320°C (608°F)		Method 5307
Steel	±0.2	
Aluminum Alloy	±0.2	
Pitting, etching, and corrosion at 20x	NR	
Percent viscosity change at 40°C (104°F), max	–5 to 25	
Neutralization number increase, max	0.2	
Insoluble material or gumming	NR	
Shear Stability	NR	
Thermal Stability	NR	
Copper Corrosion	NR	
Rust Prevention	NR	
Rubber Swell, %	NR	

(cont'd on next page)

Downloaded from http://www.everyspec.com

TABLE 4-22 (cont'd)

PROPERTY	VALUE	TEST PROCEDURE
Lubricity, mm, max	NR	
Foaming		ASTM D 892
Volume, 5-min aeration, mL		
24°C (75°F), max	625	
93°C (200°F), max	250	
24°C (75°F) (after test at 93°C (200°F)), max	625	
at the end of 10 min settling period		
24°C (75°F)	550	
93°C (200°F)	None	
24°C (75°F) (after test at 93°C (200°F))	550	
Storage Stability	NR	

NR = Not Reported

Downloaded from http://www.everyspec.com

TABLE 4-23. MIL-S-81087C: SILICONE FLUID, CHLORINATED PHENYL METHYL POLYSILOXANE

PROPERTY	VALUE	TEST PROCEDURE
Color, max	0.5	ASTM D 1500
Specific Gravity at 25/25°C (77/77°F)	1.03 to 1.06	ASTM D 1298
Viscosity, mm^2/s		
–54°C (–67°F), max	3500	ASTM D 445
40°C (104°F), min	48 to 58	
100°C (212°F), min	15 to19	
Pour Point, °C (°F), max	–75 (–103)	ASTM D 97
Neutralization Number, mg KOH/g, max	0.05	ASTM D 974
Water Content, %	NR	
Evaporation Loss, %	NR	
Flash Point, °C (°F), min	288 (550)	ASTM D 92
Fire Point, °C (°F), min	340 (644)	ASTM D 92
Autoignition Temperature, °C (°F)	NR	
Bulk Modulus, Pa	NR	
Specific Heat, J/kg·K (Btu/lb·°F)	NR	
Thermal Conductivity, W/m·K (Btu·in./s·in.^{2}·°F)	NR	
Corrosiveness and Oxidation Stability, max		Fed Std 791
mass change, mg/cm^2, 72 h at 205 ± 3°C (401 ± 5°F)		Method 5308
Steel	±0.10	
Aluminum Alloy	±0.10	
Stainless Steel	±0.10	
Titanium	±0.10	
Anode Silver	±0.10	
Pitting, etching, and corrosion at 20x	None	
Percent viscosity change at 40°C (104°F), max	±0.10	
Neutralization number increase, max	0.20	
Insoluble material or gumming	NR	
Shear Stability	NR	
Thermal Stability	NR	
Copper Corrosion	NR	
Rust Prevention	NR	
Rubber Swell, %	NR	

(cont'd on next page)

Downloaded from http://www.everyspec.com

TABLE 4-23 (cont'd)

PROPERTY	VALUE	TEST PROCEDURE
Lubricity, mm, max, 50 kgf load	0.60	ASTM D 2266
Foaming	NR	
Storage Stability Viscosity after 6 wk at 40°C (104°F), mm^2/s	50 to 60	See fluid specification, subpar. 4.6.7

NR = Not Reported

Downloaded from http://www.everyspec.com

TABLE 4-24. VV-D-1078B: DAMPING FLUID, SILICONE BASE (DIMETHYL POLYSILOXANE)

PROPERTY	VALUE	TEST PROCEDURE
Color	NR	
Specific Gravity, 25°C/25°C (77°F/77°F)	See Table 4-24A	ASTM D 1298 and D 70
Viscosity, mm^2/s, 25°C (77°F) For grades 0.65 through 100,000 For grades 200,000 through 2,500,000	See Table 4-24A	 ASTM D 445 ASTM D 1084
Pour Point, °C (°F), max	See Table 4-24A	ASTM D 97
Neutralization Number, mg KOH/g	See Table 4-24A	See fluid specification, subpar. 4.5.6
Water Content, %	NR	
Evaporation Loss, %	NR	
Flash Point, °C (°F), min	See Table 4-24A	ASTM D 92
Fire Point, °C (°F), min	NR	
Autoignition Temperature, °C (°F)	NR	
Bulk Modulus, Pa	NR	
Specific Heat, J/kg·K (Btu/lb·°F)	NR	
Thermal Conductivity, W/m·K (Btu·in./s·in.^{2}·°F)	NR	
Corrosiveness and Oxidation Stability	NR	
Shear Stability	NR	
Thermal Stability	NR	
Copper Corrosion	NR	
Rust Prevention	NR	
Rubber Swell, %	NR	
Lubricity, mm	NR	
Foaming	NR	
Storage Stability	NR	

NR = Not Reported

Downloaded from http://www.everyspec.com

TABLE 4-24A. SELECTED PROPERTIES OF VV-D-1078B FLUID

GRADE	VISCOSITY, mm^2/s at 25°C (77°F)	SPECIFIC GRAVITY, 25°C/25°C (77°F/77°F)	POUR POINT, °C (°F), max	FLASH POINT, °C (°F), min	NEUTRALIZATION NUMBER, max
0.65	0.65[1]	0.761	–68 (–90.4)	–4 (25)	0.05
1.0	1.0[1]	0.818	–68 (–90.4)	38 (100)	0.05
1.5	1.5[1]	0.851	–100 (–148)	54 (130)	0.05
2.0	2.0[1]	0.872	–54.4 (–66)	79 (175)	0.05
5.0	5.0[1]	0.915	–53.9 (–65)	121 (250)	0.05
10.0	10.0[1]	0.935	–53.9 (–65)	163 (325)	0.05
20.0	20.0[1]	0.950	–53.9 (–65)	204 (400)	0.50
50.0	50.0[1]	0.960	–53.9 (–65)	302 (575)	0.05
100	100[2]	0.966	–47.2 (–53)	302 (575)	0.05
200	200[2]	0.968	–47.2 (–53)	302 (575)	0.05
350	350[2]	0.969	–47.2 (–53)	316 (600)	0.05
500	500[2]	0.971	–47.2 (–53)	302 (575)	0.05
1,000	1,000[2]	0.971	–47.2 (–53)	302 (575)	0.05
5,000	5,000[2]	0.971	–44.4 (–48)	316 (600)	0.05
7,500	7,500[2]	0.971	–44.4 (–48)	316 (600)	0.05
12,500	12,500[2]	0.971	–44.4 (–48)	316 (600)	0.05
20,000	20,000[2]	0.972	—	316 (600)	0.05
30,000	30,000[2]	0.973	—	316 (600)	0.05
40,000	40,000[2]	0.973	—	316 (600)	0.05
60,000	60,000[2]	0.973	—	316 (600)	0.05
100,000	100,000[1]	0.973	—	316 (600)	0.05
200,000	200,000[1]	0.973	—	316 (600)	0.05
1,000,000	1,000,000[1]	0.974	—	316 (600)	0.05
2,500,000	2,500,000[1]	0.974	—	316 (600)	0.05

[1]Tolerance of ±10%
[2]Tolerance of ±5%

Downloaded from http://www.everyspec.com

TABLE 4-25. MIL-H-19457D (SH): HYDRAULIC FLUID, FIRE-RESISTANT, NONNEUROTOXIC

PROPERTY	VALUE	TEST PROCEDURE
Color	NR	
Specific Gravity	NR	
Viscosity, mm^2/s		
40°C (104°F)	38.5-45.5	ASTM D 445
100°C (212°F), min	4.8	
Pour Point, °C (°F), max	−18 (0)	ASTM D 97
Neutralization Number, mg KOH/g, max	0.1	ASTM D 974
Water Content, %, max	None	ASTM D 95
Evaporation Loss, %, at 100°C (212°F), max	0.3	ASTM D 972
Flash Point, °C (°F)	NR	
Fire Point, °C (°F)	NR	
Autoignition Temperature, °C (°F)	NR	
Bulk Modulus, Pa	NR	
Specific Heat	NR	
Thermal Conductivity, W/m·K (Btu·in./s·in.^{2}·°F)	NR	
Corrosiveness and Oxidation Stability, max mass change, mg/cm^2, 55°C (131°F) for 168 h		See fluid specification, subpar. 4.5.3
Steel	0.2	
Aluminum Alloy	0.2	
Brass	0.2	
Zinc	0.2	
Pitting, etching, and corrosion at 20x	None	
Percent viscosity change at 40°C (104°F), max	NR	
Neutralization number increase, max	0.2	
Insoluble material or gumming	0.5	
Shear Stability	NR	
Thermal Stability	NR	
Copper Corrosion, mg/cm^2, max	0.3	See fluid specification, subpar. 4.5.2
Rust Prevention	NR	
Rubber Swell, %	NR	
Lubricity, mm, max	0.60	ASTM D 2266

(cont'd on next page)

Downloaded from http://www.everyspec.com

TABLE 4-25 (cont'd)

PROPERTY	VALUE	TEST PROCEDU
Foaming		ASTM D 892
Tendency, at 24°C (75°F), mL, max	65	
Stability, after 10 min of foam collapse, mL	Complete collapse	
Storage Stability	NR	

NR = Not Reported

Downloaded from http://www.everyspec.com

TABLE 4-26. MIL-H-53119 (ME): HYDRAULIC FLUID, NONFLAMMABLE, CHLOROTRIFLUOROETHYLENE-BASE

PROPERTY	VALUE	TEST PROCEDURE
Color	NR	
Specific Gravity	NR	
Viscosity, mm^2/s		
–54°C (–65°F), max	1200	ASTM D 445
38°C (100°F), min	2.9	
135°C (275°F), min	0.60	
Pour Point, °C (°F), max	–60 (–76)	ASTM D 97
Neutralization Number, mg KOH/g, max	0.6	ASTM D 664
Water Content, ppm, max	200	ASTM D 1744
Evaporation Loss, %	NR	
Flash Point, °C (°F)	NR	
Fire Point, °C (°F)	NR	
Autoignition Temperature, °C (°F)	NR	
Bulk Modulus, isothermal secant at 27.6 MPa (4000 psi), kPa (psi)	1.242×10^6 (180,137)	See fluid specification, subpar. 30.5
Specific Heat	NR	
Thermal Conductivity, W/m·K (Btu·in./s·in.^{2}·°F)	NR	
Corrosiveness and Oxidation Stability, max mass change, mg/cm^2		Fed Std 791 Method 5308
Steel	±0.2	
Aluminum Alloy	±0.2	
Magnesium Alloy	±0.2	
Cadmium	±0.2	
Copper	±0.6	
Pitting, etching, and corrosion at 20x	None	
Percent viscosity change at 40°C (104°F)	5.0	
Neutralization number increase, max	0.2	
Insoluble material or gumming	None	
Shear Stability	NR	
Thermal Stability		See fluid specification, subpar. 30.3
Percent viscosity change at 40°C (104°F)	5.0	
Neutralization number increase	0.2	
Rust Prevention	NR	
Rubber Swell, %, Viton GLT fluorocarbon elastomer	25 to 40	Fed Std 791 Method 3603

(cont'd on next page)

Downloaded from http://www.everyspec.com

TABLE 4-26 (cont'd)

PROPERTY	VALUE	TEST PROCEDURE
Lubricity, mm	0.8	ASTM D 4172 Condition B
Foaming		
Tendency, at 24°C (75°F), mL, max	65	ASTM D 892
Stability, after 10 min of foam collapse, mL	Complete collapse	
Storage Stability	Pass	Fed Std 791 Method 3465

NR = Not Reported

Downloaded from http://www.everyspec.com

REFERENCES

1. MIL-H-5440G, *Hydraulic Systems, Aircraft, Types I and II, Design and Installation Requirements for*, 14 September 1979.
2. Constance Van Brocklin, *Information Compendium on Nonflammable Hydraulic Fluid and Design Requirements for Its Adoption*, Report No. 2486, US Army Belvoir Research, Development, and Engineering Center, Fort Belvoir, VA, 1990.
3. B. R. Wright, *Tradeoff Assessment of Candidate Fire-Resistant Hydraulic Fluids*, Letter Report BFLRF 90-001, Belvoir Fuels and Lubricants Research Faculty, Southwest Research Institute, San Antonio, TX, 1990.
4. B. R. Wright and W. D. Weatherford, *A Technique for Evaluating Fuel and Hydraulic Fluid Ballistic Vulnerability*, AFLRL Report No. 89, US Army Fuels and Lubricants Research Laboratory, Southwest Research Institute, San Antonio, TX, 1977.
5. C. E. Snyder, "Utilization of Synthetic-Based Hydraulic Fluids in Aerospace Applications", Lubrication Engineering **36**, 160 (1979).
6. *Skydrol Hydraulic Fluid Service Manual*, Publication No. 9127, Monsanto Chemical Company, St. Louis, MO, 1989.
7. *Chevron HyJet IV-A: A Phosphate Ester Aircraft Hydraulic Fluid*, Chevron International Oil Company, Inc., San Francisco, CA, 1991.
8. *Fyrquel Fire-Resistant Hydraulic Fluids*, Alcor, Inc., San Antonio, TX, 1991.
9. *Fire-Resistant Fluids*, Technical Bulletin, Phosphorus Chemicals Division, FMC Corporation, San Diego, CA, 1989.
10. A. A. Conte, Jr., and J. L. Hammond, Development of a High-Temperature Silicone-Base Fire-Resistant Hydraulic Fluid, Report No. NADC-79248-60, Naval Air Development Center, Warminster, PA, 5 February 1980.
11. C. E. Snyder and R. E. Dolle, "Development of Polyperfluoroalkylethers as High-Temperature Lubricants and Hydraulic Fluids", ASLE Transactions **19**, 3, 171-9 (1975).

BIBLIOGRAPHY

D. C. Atkins *et al.*, "Synthetic Lubricant Fluids From Branched-Chain Diesters—Part II", Ind. Eng. Chem. **39**, 484-99 (1947).

J. E. Brophy *et al.*, "Aqueous Nonflammable Hydraulic Fluids", Ind. Eng. Chem. **43**, 884-92 (1961).

L. J. Gschwender, D. R. Anderson, and G. Chen, *Development of High-Temperature –54 to 316°C Hydraulic Fluids for Advanced Strategic Air-Launched Missile (ASALM) Application*, Technical Report No. UDR-TR-81-52, University of Dayton Research Institute, Dayton, OH, July 1981.

L. J. Gschwender, D. R. Anderson, and G. Chen, *Development of High-Temperature –54 to 316°C Hydraulic Fluids for Advanced Strategic Air-Launched Missile (ASALM) Application*, AFWAL-TR-81-4163, Air Force Wright Aeronautical Laboratory, Air Force Systems Command, Wright-Patterson Air Force Base, OH, December 1991.

L. J. Gschwender and C. E. Snyder, Jr., "High-Temperature Hydraulic Fluids", Esslinger Tribology 2000 Conference Proceedings (to be published) and *J. of Synthetic Lubrication* (to be published).

L. J. Gschwender, C. E. Snyder, Jr., D. R. Anderson, and G. W. Fultz, "Determination of Storage Stability of Hydraulic Fluids for Use in Missiles", Lubrication Engineering **40**, 659-63 (1984).

L. J. Gschwender, C. E. Snyder, Jr., G. J. Cehn, A. A. Krawetz, T. Togrov, and G. Musil, "Dynamic Oxygen Absorption of Model Silahydrocarbon Fluids at Elevated Temperatures", Lubrication Engineering **46**, 92-103 (1990).

L. J. Gschwender, C. E. Snyder, Jr., and G. Driscoll, "Alkyl Benzenes—Candidate High-Temperature Hydraulic Fluids", Lubrication Engineering **46**, 6, 377-81 (1990).

L. J. Gschwender, C. E. Snyder, Jr., and G. W. Fultz, "Development of a –54 to 135°C Synthetic Hydrocarbon-Based, Fire-Resistant Hydraulic Fluid", Lubrication Engineering **42**, 8, 485-90 (1986).

L. J. Gschwender, C. E. Snyder, Jr., and Shashi K. Sharma, "Pump Evaluation of Hydrogenerated Polyalphaolefin Candidates for a –54 to 135°C Fire-Resistant Air Force Aircraft Hydraulic Fluid", Lubrication Engineering **44**, 4, 324-29 (1988).

L. J. Gschwender, C. E. Snyder, Jr., and S. K. Sharma, "Development of a –54 to 175°C High-Temperature Nonflammable Hydraulic Fluid, MIL-H-53119, for Air Force Systems", *Lubrication Engineering* (in review).

R. C. Gunderson and A. W. Hart, *Synthetic Lubricants*, Reinhold Publishing Corporation, New York, NY, 1962.

V. K. Gupta, M. Prazak, L. J. Gschwender, and C. E. Snyder, Jr., "Thermal Stability Characteristics of a Nonflammable Chlorotrifluoroethylene (CTFE) Base Stock Fluid", Lubrication Engineering **46**, 9, 601-5 (1990).

Klaus, Tewksbury, and Fenske, "Preparation, Properties, and Some Applications of Superrefined Mineral Oils", ASLE Trans. **5**, 115-26 (1962).

R. LeMar, *Development of a Wide Temperature Range Hydraulic Fluid*, RIA Report No. 67-2254, Rock Island Arsenal, Rock Island, IL, 1967.

C. E. Snyder, Jr., G. W. Gandee, L. J. Gschwender, T. L. Graham, Jr., W. E. Berner, and W. B. Campbell, "Nonflammable Aircraft Hydraulic Systems Development",

Downloaded from http://www.everyspec.com

Proceedings From American Institute of Aeronautics and Astronautics Aircraft Systems and Technology Conference, Dayton, OH, 11-13 August, 1981, 88-97.

C. E. Snyder, Jr., and L. J. Gschwender, "Development of a Nonflammable Hydraulic Fluid for Aerospace Applications Over a -54 to 135°C Temperature Range", Lubrication Engineering 36, 458-65 (1980).

C. E. Snyder, Jr., and L. J. Gschwender, "Liquid Lubricants for Use at High Temperatures", *Solid and Liquid Lubricants for Extreme Environments*, American Society of Lubrication Engineers Special Publication SP-15, American Society of Lubrication Engineers, Atlanta, GA, 1984.

C. E. Snyder, Jr., and L. J. Gschwender, "Nonflammable Hydraulic Fluid System Development for Aerospace", *Proceedings From the 4th International Colloquim of Synthetic Lubricants and Operational Fluids*, Esslingen, West Germany, January 1984.

C. E. Snyder, Jr., and L. J. Gschwender, "Nonflammable Hydraulic Fluid System Development for Aerospace", J. of Synthetic Lubrication 1, 188-200 (1984).

C. E. Snyder, Jr., and L. J. Gschwender, "Perfluoropolyalkylethers—Liquid Lubricants of the Future?", *Advances in Engineering Tribology*, Society of Tribology and Lubrication Engineers Publications, Chicago, IL, 1991.

C. E. Snyder, Jr., and L. J. Gschwender, Aerospace Application of Synthetic Fluids and Lubricants", *STLE Handbook of Tribology and Lubrication*, Vol. III, R. Booker, Ed., Society of Tribology and Lubrication Engineers Publications, Chicago, IL, 1993.

C. E. Snyder, Jr., and L. J. Gschwender, "Aerospace", *Synthetic Lubricants and High-Performance Functional Fluids*, R. L. Shubkin, Ed., Marcel Dekker, Inc., New York, NY.

C. E. Snyder, Jr., L. J. Gschwender, and W. B. Campbell, "Development and Mechanical Evaluation of Nonflammable Aerospace -54 to 135°C Hydraulic Fluids", Lubrication Engineering 38, 41-51 (1982).

C. E. Snyder, Jr., L. J. Gschwender, G. J. Morris, and W. B. Campbell, "Investigation of Air Force MIL-H-5606 Hydraulic System Malfunctions Induced by Chlorinated Solvent Contamination", Lubrication Engineering 37, 457-61 (1981).

C. E. Snyder, Jr., L. J. Gschwender, K. Paciorek, and J. Nakahara, "Development of a Shear Stable Viscosity Index Improver for Use in Hydrogenerated Polyalphaolefin-Based Fluids", Lubrication Engineering 42, 9, 547-57 (1986).

C. E. Snyder, Jr., L. J. Gschwender, and C. Tamborski, "Linear Polyperfluoroalkylether-Based Wide-Liquid-Range High-Temperature Fluids and Lubricants", Lubrication Engineering 37, 344-49 (1981).

C. E. Snyder., Jr., L. J. Gschwender, C. Tamborski, and G. J. Chen, "Development of High-Temperature (-40 to 288°C) Hydraulic Fluids for Advanced Aerospace Applications", Lubrication Engineering 38, 173-8 (1982).

W. A. Wright and W. W. Crouse, "General Relationships for Polymer-Petroleum Oil Blends", Ind. Eng. Chem., Prod. Res. and Dev. 3, 153-69 (1964).

Downloaded from http://www.everyspec.com

Downloaded from http://www.everyspec.com

CHAPTER 5
ADDITIVES

The numerous chemicals and compounds that may be added to hydraulic fluid base stocks to improve particular fluid characteristics are presented. The chemical composition of additives and the interactions of various elements are discussed.

5-1 INTRODUCTION

Formally defined, an additive for hydraulic fluids and lubricants is a compound or component that enhances some property of, or imparts some new property to, the base fluid. A base stock hydraulic fluid that cannot meet the operational requirements in a given hydraulic system frequently can be modified through the use of additives so that the range of satisfactory operation of the base liquid can be extended to meet more severe requirements. In the formulation of a hydraulic fluid, additive components may constitute from less than 1% to as much as 35% of the final composition of the liquid. The more important classes of additives include oxidation inhibitors, corrosion inhibitors, viscosity index improvers, foam inhibitors, and lubricity enhancers.

In the selection of additives and formulation of a fluid, each additive must be compatible with the base stock, other additives, and system components. Examples of problems of compatibility that can be encountered are cited throughout this chapter. Solubility of additives in the base stock is an important limitation of the use of some additives at low temperatures.

Although general theories can be developed for the mode of action of different kinds of additives, an additive effective in one hydraulic fluid may not be equally effective in another. The range of conditions a hydraulic fluid may encounter during storage and use determines the selection of additives. Therefore, the formulation of a hydraulic fluid must take into account a wide variety of factors, and the effectiveness of each additive must be verified experimentally. Several of the common shortcomings of hydraulic fluids and the technology and additives developed to compensate for them are discussed in the remainder of this chapter.

5-2 OXIDATION INHIBITORS

In environments that contain even small amounts of oxygen, the oxidative stability of a hydraulic fluid limits its useful life and its upper temperature value. Therefore, additives or inhibitors that increase the resistance of the fluid to the chemical changes associated with oxidation are very important. The ultimate changes that may be encountered as a result of oxidative deterioration include changes in viscosity; the precipitation of insolubles, including lacquers and varnish; and an increase in acidity and corrosiveness. During consideration of the oxidative stability of a hydraulic fluid, accompanying corrosion effects should not be, and usually are not, considered independently of oxidation. For this reason laboratory screening of oxidation inhibitors usually considers both changes in acidity of the hydraulic fluid and the corrosion of metal samples in contact with the fluid.

5-2.1 MODE OF ACTION OF ANTIOXIDANTS

In order to consider the mode of action of antioxidants properly, some knowledge of the mechanism of oxidative degradation is necessary. Liquid phase oxidation is considered a free radical process undergoing the usual steps of initiation, propagation, and termination.

Initial oxidation reactions in hydraulic fluids are most often thermally activated, but they may also be induced by light ionizing radiation or other means. Termination occurs with the formation of nonradicals, such as alcohols, aldehydes, ketones, and olefins, which are also susceptible to oxidation and may produce acids, sludge, and varnish.

The autocatalytic nature of the oxidation reaction is due to the catalysis of the reaction caused by the free radicals generated in the reaction. Also, when acidic materials form as a consequence of oxidation in a hydraulic fluid that is in contact with metals, metal corrosion can occur with the formation of metal ions, which can become soluble in the fluid. These metal ions, particularly those of iron, lead, and copper-beryllium, are catalysts in the oxidation process. The stability under oxidative conditions of di-2-ethylhexyl sebacate at 175°C (347°F) in the presence of various metals illustrates this catalytic effect: no catalyst, 125 h; copper, 20 h; copper beryllium, 30 h; steel, 115 h; and aluminum, 120 h (Ref. 1).

Although metal ions are prooxidants at lower temperatures in hydrocarbon liquids, they can function as antioxidants in higher temperature fluids, such as silicones, polyphenyl ethers, and fluoroesters (Ref. 2). At higher temperatures in these fluids, the metal ions presumably alter the course of the hydroperoxide reactions and produce nonradical products.

5-2.2 CLASSES OF ANTIOXIDANTS AND SYNERGISM

Antioxidants are effective in one of three ways:

1. Metal deactivators minimize the catalytic effect of trace amounts of metal ions in the fluid.
2. Free radical acceptors break the chain reaction in the propagation step.

Downloaded from http://www.everyspec.com

3. Hydroperoxide destroyers inhibit the formation of free radicals in the hydroperoxide decompositions.

A combination of antioxidants that serves several of these purposes may be used.

5-2.2.1 Metal Deactivators

The metal deactivators most commonly used are sequestering or chelating agents. These include N, N′-disalicylidene diamine, mercaptothiadiazole, quinizarin, and alizarin. Metal deactivation is also used to inhibit the oxidation of motor oils and involves the formation of protective films on metal surfaces.

5-2.2.2 Free Radical Acceptors

Amines and phenols are most commonly used as free radical acceptors and are effective in many base stocks. Hindered phenols, such as butylated hydroxytoluene (BHT), intercept deleterious radicals to form stable, hindered radicals, which are not prone to propagation. Hindered and/or aromatic amines, such as phenylalpha-naphthylamine, operate similarly to the hindered phenols. Amine antioxidants are usually stable to higher temperatures than the phenolic type (Refs. 3 and 4), but both are dependent on the molecular weight and structure of the additive.

5-2.2.3 Hydroperoxide Destroyers

A variety of sulfur, selenium, and phosphorus-containing compounds can function as hydroperoxide destroyers. Effective materials include phenothiazine, phosphorus pentasulfide-olefin reaction products, zinc dialkyldithiophosphates (ZDPs), sulfurized olefins, alkyl polysulfides, dialkylphosphonates, trialkyl phosphites, zinc dialkyl dithiocarbamates, alkyl trithiocarbamates, and alkyl selenides. Phenothiazine is particularly useful at higher temperatures. As antioxidants, zinc dialkyldithiophosphates effectively decompose peroxides, even at high temperature. The ZDPs themselves decompose thermally to products that are even more potent antioxidants than the parent compounds. The decomposition temperature is dependent on the chemical structure of the antioxidants. ZDPs based on phenols are the most stable and are followed by those derived from primary alcohols and finally by those derived from secondary alcohols.

5-2.2.4 Synergism

The combined effect of two or more inhibitors is often greater than the sum of the effects of the individual inhibitors. This synergistic effect has led to the common practice of employing two or more oxidation inhibitors. Not only can synergism occur by the reinforcement of inhibitors through their effectiveness in different phases of the oxidation mechanism, but it also can occur by the second inhibitor regenerating the first. For example, synergistic effects observed at 150°C (302°F) when dialkyl phosphonates are used with sterically hindered alkyl phenols are attributed to the phosphonates transferring hydrogen to the oxidized phenols. Extremely effective synergistic antioxidant systems can be constructed from the proper combination of phenolic- and amine-type antioxidants (Ref. 5).

5-2.3 EXAMPLES OF THE USE OF INHIBITORS IN VARIOUS HYDRAULIC FLUIDS

The effectiveness of various classes of materials as oxidation inhibitors in different kinds of hydraulic fluids and certain problems attendant with their use can be illustrated by the results of recent research. Since oxidation rates increase rapidly with temperature, inhibitors useful at higher temperatures have received considerable attention.

5-2.3.1 Highly Refined Mineral Oils

The natural inhibitors in mineral oils are removed when mineral oils are exhaustively hydrogenated or superrefined, and the oils become even more susceptible to oxidative deterioration. On the other hand, the highly refined mineral oils show better response to additive modification than the less highly purified oils. Satisfactory inhibitors at 177°C (350°F) are phenothiazine, phenyl-1-naphthylamine, and cadmium diamyldithiocarbamate (Refs. 6 and 7).

5-2.3.2 Silicon-Containing Fluids

Diarylamines are effective antioxidants in siloxanes at 205°C (400°F) but cause sludging. At that temperature phenolic antioxidants are ineffective and selenides cause severe copper corrosion. When a sufficiently high degree of nuclear alkylation is introduced into the structure of the diarylamines, sludge formation can be avoided (Refs. 8 and 9).

Chlorophenylsilicones have been reported to be adequately stabilized at 260°C (500°F) against oxidation with iron octoate (Refs. 6 and 10). Aromatic compounds containing three or more ring systems, e.g., 1,2-benzanthracene and pyrene, also effectively retard the oxidation of a chlorophenylsilicone (Ref. 10). An improved synthesis procedure for silahydrocarbons has been developed (Ref. 11). Silahydrocarbon fluids do exhibit appreciable improvement in low-temperature properties without effect on any of the desirable high-temperature properties. These new silahydrocarbon fluids are suitable for applications for which petroleum-base or synthetic hydrocarbon fluids cannot meet the performance specifications due to thermal and/or rheological deficiencies. Hindered phenols are effective antioxidants in silahydrocarbons (Ref. 11).

The presence of trace metals can have a profound effect on the oxidative stability of polydimethylsiloxanes and polymethylphenylsiloxanes (Refs. 6, 12, and 13). At 200°C (392°F) lead, selenium, and tellurium accelerate oxidation. Organic selenides, aromatic amines, and phenothia-

Downloaded from http://www.everyspec.com

zine prolong the life of silicone oils two to five times, but the life of the oils can be extended eight times with the use of iron or copper chelates of disalicylalethylenediamine or disalicylalpropylenediamine—the solubilized metal acts as an inhibitor. The use of this inhibitor in poorly ventilated systems under oxygen-deficient conditions, however, leads to the precipitation of the metal as the reduced metal oxide. Cerium complexes have been found not to be subject to this limitation (Ref. 14). Processes have been developed to modify silicone oils with cerium complexes that raise the stabilization temperature from 325 to 400°C (617 to 752°F) (Ref. 15).

5-2.3.3 Ethers

Tetraphenyltin and bis(p-phenoxyphenyl)diphenyltin perform well as antioxidants for polyphenyl at 316 to 343°C (600 to 650°F). In addition, p-bis(triphenylstannoxy)benzene, metal salts of N,N'-diphenyldithiocarbamic acid, triphenylbismuth, copper oxides, metal acetylacetonates, metal dithiocarbamates, and the nickel and cobalt chelates of N-phenyl-5-nitrosalicylimines have been shown to be effective in poly(phenyl ether) systems (Refs. 6, 16, 17, and 18).

Tris(pentafluorophenyl)phosphine, tris(pentafluorophenyl)-phosphine oxide, tris(4-heptafluorotolyl)phosphine, and tris[4-(pentafluorophenoxy)tetraflurophenyl]phosphine effectively eliminate the oxidative deterioration that occurs above 260°C (500°F) in perfluoropolyalkylether liquids. These additives have very poor solubility in perfluoropolyalkylether fluids; however, their effectiveness in improving the oxidation-corrosion stabilities of these fluids has led to development of improved additives. These additives, which have the unique property of complete solubility in the fluids, have shown effectiveness in both the hexafluoropropylene-oxide-base and linear polyperfluoroalkylethers (Ref. 19).

5-2.3.4 Polyalphaolefin (PAO)

Antioxidants commonly used with PAOs are alkylated phenol, butylated hydroxytoluene, and pp'dioxtyl diphenylamine. These antioxidants operate much the same as in petroleum base oil, as free radical acceptors.

The inhibitor efficiency of a phenol is markedly increased by substitution of alkyl groups in the two ortho and para positions. A variety of hindered phenols are produced commercially and employed as inhibitors in transformer, turbine, and engine oils and in hydraulic fluids.

Butylated hydroxytoluene can be stored at ambient temperature over long periods of time. Some yellowing of some forms of this additive may appear, but it does not necessarily affect performance.

5-3 CORROSION INHIBITORS

Alkali metal and alkaline earth metal salts of high-molecular-weight alkaryl and petroleum sulfonic acids have long been widely used as dispersants and corrosion inhibitors in a number of applications, such as in lubricating oils, greases, and rust-preventive coatings (Ref. 20).

5-3.1 DEFINITIONS

Corrosion is the deterioration through chemical change of a metal into one or more of its oxides, hydrated oxides, carboxylates, fluorides, carbonates, or other compounds. The special case of the deterioration of iron or steel by moist air (oxygen) is called rusting. Rusting cannot occur in systems from which oxygen is rigorously excluded. Corrosion of metal components in contact with a hydraulic fluid may occur through the action of water and air present in the fluid, through the action of lubricant decomposition products, or through the direct chemical action of the fluid on the metal surface.

A corrosion inhibitor is an additive that prevents or decreases corrosive attack on metals. Although its function may be one of directly protecting the metal surface, an additive may function as a corrosion inhibitor if it interferes with any of the processes that ultimately culminate in corrosion. For this reason the processes of inhibiting corrosion and oxidation are intimately related.

Not only do oxidation products cause corrosion, but also corrosion products may promote oxidation. The interdependence of oxidation and corrosion inhibitors can be illustrated as follows. An antioxidant that retards the autoxidation of a fluid prevents the formation of corrosive acids. Amine antioxidants can react with and neutralize certain acidic materials, but aromatic amines do not effectively neutralize carboxylic acid, a common corrosive oxidation product. In many screening tests for hydraulic fluids and lubricants, oxidation and corrosion are considered concurrently.

5-3.2 MODE OF ACTION OF RUST INHIBITORS

Rust inhibitors are effective through the formation of closely packed hydrophobic monomolecular layers on the surface of the ferrous metal to be protected (Refs. 21 through 26). Most organic molecules that have an adsorbable polar group attached to a hydrophobic chain are effective rust inhibitors. The higher molecular weight polar compounds are less soluble in oils but have a greater tendency to adsorb on a metal surface and are therefore more effective as rust inhibitors. These closely packed films prevent the penetration of water.

Salts or soaps of high-molecular-weight carboxylic acids—such as naphthenates or sulfonic acids, particularly the petroleum mahogany sulfonic acids, as well as barium dinonylnaphthalene sulfonate (widely used in MIL-H-6083 and MIL-H-46170)—are useful and inexpensive additives for lubricant compositions. These soaps, dispersed in nonpolar solvents, form colloidal systems. The soaps are

Downloaded from http://www.everyspec.com

adsorbed on the metal surfaces and are in equilibrium with low concentrations of soaps in solution, which, in turn, are in equilibrium with the soaps in the colloidal micelle. Although the complex equilibria are not fully understood, consideration of the system as one in equilibrium allows the explanation of some of the phenomena associated with the use of these rust inhibitors. These effects include temperature range limitations in the use of the inhibitors, mechanical removal and resealing of coated surfaces, leaching of the inhibitor from solution with water, and depletion of the adsorbed layers by dilution with hydraulic fluids that do not contain the inhibitor.

The colloidal soap micelle also serves as a "sink" for corrosive acids formed as products of oxidation. Sequestration of corrosive acids by the soap micelles offers an explanation of why the soaps are better inhibitors than the corresponding acids. Combination of the soap micelle with the corrosive acids occurs through cooperative micelle formation or through hydrogen bonding.

5-3.3 LIMITATIONS IN THE USE OF RUST INHIBITORS

Since the most effective rust inhibitors have low solubility in the base oils, precipitation during storage may occur when inhibitor concentrations exceed 0.5 to 1.0%. Precipitation accelerates at low temperatures because solubility of the inhibitor decreases with decreasing temperature. Compounded lubricants may experience significant losses in their ability to inhibit rusting after six months of storage because of the precipitation of the inhibitor. Inhibitor insolubility is frequently evident by the development of a haze in the oils.

Because molecular agitation in a liquid increases as temperature increases, the solubility of the additive and therefore its tendency for desorption from the metal surface increase with temperature. Stated differently, raising the temperature of the oil increases the minimum concentration of the additive necessary to achieve adequate protection. Usually, a temperature is reached above which a rust-inhibiting additive is not effective at any concentration. The maximum temperature for the complete inhibition of rusting for several acids in a petroleum oil increases in the following order: linoleic, 46°C (115°F); undecylic, 60°C (140°F); myristic, 74°C (165°F); and stearic, 88°C (190°F) (Ref. 21). The solubility of the additives in the oil decreases in the same order.

The adsorbed monolayers can be ruptured by abrasion or wear and leave areas vulnerable to corrosion. If sufficient inhibitor is present in the hydraulic fluid, it will be readsorbed in the scuffed location. The rate of repair will be greater for the less viscous oils.

The presence of water as a contaminant in a hydraulic system may result in the leaching of the monomolecular layer from the surface of the metal or the inhibitor from the hydraulic fluid. The polar nature of most inhibitors allows some solubility in water, which results in the leaching, even though the degree of solubility may be small.

Since the adsorbed monolayer is in equilibrium with the inhibitor in solution, addition of makeup fluid containing no inhibitor to a hydraulic fluid may ultimately result in the desorption of the monolayer and loss of rust-inhibiting properties. Monolayers of compounds having rust-inhibiting properties can usually be removed by exhaustively washing the surfaces with solvents.

5-3.4 EXAMPLES OF RUST AND CORROSION INHIBITORS

Many classes of compounds are effective as rust inhibitors, namely: sodium and barium dinonylnaphthalene sulfonates; carboxylates, including sorbitan monooleate; and a variety of other compounds (Ref. 21). Also zinc dialkyldithiophosphates (ZDPs), metal dithiocarbamates, phosphorized and/or sulfurized terpenes, alkynyl succinic acids and their derivatives, propoxylated or ethoxylated alkylphenols, substituted imidazolines, and sulfonates are reported as effective rust inhibitors (Ref. 27). Hydroxyarylstearic acids function as both oxidation and rust inhibitors (Refs. 28 and 29). Nitrogen compounds—such as amines or amides, certain phosphorus compounds (especially esters of phosphorus acids), and dicarboxylic acids made by reacting olefins with maleic anhydride—are also effective rust-preventive additives (Ref. 30).

Impurities present in an additive may have an adverse effect on a hydraulic system. When concentrations of inorganic salts, such as calcium chloride or calcium sulfate, are present in concentrations as great as 0.12% in a dinonylnaphthalene sulfonate, corrosion caused by galvanic action may occur (Ref. 31).

When inhibitors are selected to prevent corrosion, the identity of the specific components of the metal-liquid system must be considered because an additive that protects iron may itself corrode copper or silver. An example of the need for a specific inhibitor for a particular system is perfluoropolyalkylether fluids, which have proven corrosive to ferrous and titanium alloys in oxidative atmospheres at 260°C (500°F). Perfluoroarylphosphines and phosphine oxides used as additives prevent both degradation of the perfluoropolyalkylether fluids and the consequent corrosion of metal under these conditions up to 343°C (650°F) (Refs. 32 and 33).

Different classes of inhibitors must be used in polar fluids in which water is either a part of the composition or soluble to some extent in the fluid. For example, 0.2% of sodium nitrite and 0.8% of disodium phosphate dodecahydrate function as corrosion inhibitors in glycerol-water hydraulic fluids containing 40% glycerol (Ref. 34).

For inhibiting corrosion of tin, steel, aluminum, cast iron, brass, and copper, in contact with ethylene glycol and 1,2-

Downloaded from http://www.everyspec.com

propylene glycol, the following combinations have proved satisfactory: 0.5% borax and 0.5% hydroquinone; 0.5% triethanolamine and 0.5% potassium hydroxide; and 0.5% 1,5-dihydroxynapththalene and 0.5% potassium hydroxide. The most satisfactory inhibitors for systems containing n-butanol are 0.5% hydroquinone with 0.5% potassium mercaptobenzothiazole (Refs. 27 and 35).

5-3.5 VOLATILE CORROSION INHIBITORS

The polar rust-inhibiting compounds described in par. 5-3.4 are effective only on ferrous surfaces contacted by the hydraulic fluid. Corrosion and rust in other parts of the system can be inhibited through the use of volatile corrosion inhibitors, which readily sublime at ordinary temperatures and deposit a monolayer on exposed metal surfaces. These inhibitors are often water soluble and can be washed from the surface with water. Although this technique of corrosion inhibition is most frequently used in connection with packaging (Refs. 27 and 36), aqueous hydraulic fluids can be inhibited in both the liquid and vapor phases with diisopropylammonium nitrite (Ref. 37).

5-4 VISCOSITY INDEX IMPROVERS

5-4.1 MODE OF ACTION

Addition of certain polymers to a hydraulic oil increases the viscosity of the oil throughout its useful temperature range and improves its viscosity-temperature relationship. The contribution of a polymer to the viscosity of a polymer-oil blend relates directly to the effective hydrodynamic volume of the polymer. The hydrodynamic volume of the polymer, in turn, relates to the degree of solvation of the polymer by the base oil (Ref. 38). Higher temperatures favor better solubility of the polymer in the oil; hence there are better solvation and an "expanded" macromolecule. Lower temperatures favor contraction of the macromolecule, or stated differently, the formation of a convoluted species. In this way the effective contribution of the polymer to the viscosity of the polymer-oil blend is greater at higher temperatures. Not all polymers differ in their contribution to viscosity at different temperatures, but they may be referred to as viscosity index (VI) improvers because of the inconsistencies of the Dean and Davis viscosity-index system (Ref. 39).

The thickening power of a polymer increases as the molecular weight increases and, consequently, as its effective hydrodynamic volume increases. The thickening power is usually proportional to the molecular weight to the 0.5 to 0.8 power (Ref. 40).

5-4.2 LIMITATIONS

In order to maintain a specified viscosity in a hydraulic fluid at a given temperature, a lower viscosity and therefore more volatile base fluid must be compounded with a polymer thickener because the effect of the additive is to increase the viscosity at all temperatures. In applications for which low volatility and low viscosity are required, the use of polymer thickeners is limited.

A second limitation of the use of VI improvers is their susceptibility to shear. In a hydraulic-fluid-polymer blend, the extended polymer coil may become oriented under high shear stress with a consequent loss in viscosity. Since the original polymer configuration reforms when the shear force is removed, the term "temporary viscosity loss" has been applied to this phenomenon. An alternate term, "orientation viscosity loss", has been offered in order to differentiate the effect from the same effect that may result from "thixotropic viscosity loss" of mineral oils below their cloud point (Ref. 39). Also, under high shear stress the polymer chains may rupture with a consequent permanent loss in viscosity of polymer-thickened oils. This change, which is not a depolymerization, is more pronounced in blends that contain high-molecular-weight, or more viscous, polymers. Lower molecular weight polymers are less susceptible to "permanent viscosity loss".

The term "shear stability" encompasses both temporary and permanent viscosity losses. Laboratory methods used to produce accelerated shearing of polymer-thickened oils have included a mechanical pump loop in which a pump recycles the fluid through an orifice and a sonic oscillator test. Since the sonic oscillator test offers some advantages over the pump-loop test, an American Society for Testing and Materials (ASTM) sonic shear stability method has been developed (Ref. 41). Studies of the sonic shear test have found that shear breakdown of the polyisobutylenes could be blocked by water contamination but that the shear stability of polymethacrylates was not significantly affected under similar conditions (Ref. 42). The shear stability of polymethacrylates and polyisobutylenes varies inversely with their ability to improve the viscosity index (Ref. 43). The ability of an additive to improve the viscosity index decreases with applied shear stress (Ref. 44).

Sources of high energy other than shear can also induce degradation of polymer thickeners. These sources include high temperatures, ultrasonic degradation, and gamma irradiation (Ref. 45).

Final limitations of the use of polymeric materials are their solubility in the base fluid and the compatibility of compounded fluids with possible contaminants. Thus the polymethacrylates have an advantage as VI improvers in diester-base fluids. The additives are not precipitated when the hydraulic fluid is accidentally contaminated by petroleum oils or the common volatile solvents used to clean hydraulic systems (Ref. 46).

5-4.3 EXAMPLES OF EFFECTIVE POLYMERS

The VI improvers that have achieved the greatest commercial importance can be categorized in two groups (Ref.

Downloaded from http://www.everyspec.com

47): Group 1 polymers are of the hydrocarbon type, which includes olefin copolymers (OCP) and hydrogenated styrene-diene copolymers (HSD), and Group 2 polymers are of the ester type, which is represented predominantly by the polyalkylmethacrylates (PMA).

OCP-type VI improvers are prepared via a Ziegler-Natta polymerization process. Generally, the monomers are randomly distributed along the chain of the polymer without much branching. Styrene-diene copolymers are anionically polymerized and then hydrogenated to eliminate double bonds and improve oxidation stability; thus they yield the HSD VI improvers. PMA VI improvers are made by free radical polymerization of various alkyl methacrylates including methyl, butyl, dodecyl, and octadecyl methacrylate. The alkyl monomer ratios and molecular weight of the polymers are balanced for optimum solubility and shear stability for the intended application (Ref. 48).

OCP-type VI improvers require pour point depressants in order to meet the low-temperature viscosity specifications described earlier, whereas PMA VI improvers do not require pour point depressants because they are pour point depressants. Although all groups of VI improvers undergo some chemical and thermal degradation, PMAs are somewhat more susceptible than their hydrocarbon counterparts.

Multifunctional VI improvers are a new type of product, which has only been developed and marketed in the 1980s. They differ from conventional VI improvers in that they provide performance properties in addition to VI improvement. Dispersant olefin copolymers (DOCP) and dispersant polymethacrylates (DPMA) are well-known examples of multifunctional VI improvers. They are prepared by chemically attaching various functional moieties onto the polymers. Amine molecules may also be incorporated to impart dispersant and/or antioxidant characteristics, and phenolic molecules may also be incorporated to improve antioxidant properties (Ref. 49 and 50).

5-5 FOAM INHIBITORS, EMULSIFIERS, AND DEMULSIFIERS

Additives useful as foam inhibitors, emulsifiers, and demulsifiers have in common their ability to modify (increase or decrease) the stability of an interface between two phases in a fluid system. Foaming results from the formation of stable gas bubbles in the liquid phase, and emulsion occurs with the formation of two stable liquid phases, one dispersed in the other. Foams and emulsions are stabilized by the presence of an adsorbed film at the interface between the two phases.

5-5.1 CHARACTERISTICS OF FOAMS AND THE MODE OF FOAM INHIBITION

The mechanism of foam inhibition is frequently thought to involve changes in the interfacial tension between the liquid and vapor through changing the concentration of polar impurities in the region of the vapor bubble. A number of other theories on the stability of foams and the inhibition of foams have been reviewed by Zuidema (Ref. 51).

Synthetic fluids that are a single chemical compound cannot foam because no impurities are present; however, even highly refined petroleum fluids have the inherent capability of foaming because they are mixtures. Problems with foam are more likely to arise when polar impurities are present. In addition to direct contamination these polar impurities can come from any of several sources. Accumulated acidic oxidation products or the addition of additives can cause foaming. For example, rust inhibitors frequently contain polar groups and are potential foam stabilizers. A secondary effect is that the possibility of inhibiting foaming may be diminished by the presence of other additives. Thus an antifoam additive is less effective in a polymer-containing liquid than in one that does not contain a polymeric additive (Ref. 52).

The foaming characteristics of a liquid can depend on a number of operating characteristics, as well as on the system design. Primarily because of its effect on viscosity, temperature is also an important factor in foam stability. The collapse of the entrained air can depend in part on the ability of the liquid to flow into the void; thus a lower viscosity would favor control of foam. Although liquids decrease in viscosity with increases in temperature, foaming at higher temperatures can be a serious problem because of the large coefficient of thermal expansion of vapors relative to liquids. Thus it is reported that at higher temperatures foams are more difficult to control in lower viscosity mineral oils and synthetic hydrocarbons than in high-viscosity materials (Ref. 1).

Several side effects of foaming can be observed. Foaming of an oxidation-susceptible material at a high temperature increases the gas-liquid contact area and consequently the rate at which oxidation occurs. Although foaming is usually associated with air, it may also occur when impurities are present and the gas phase is the vapor of the fluid, particularly in regions of a system in which the local pressure drops to the vapor pressure of the lubricant. Since these are the same conditions that lead to cavitation, the two phenomena are related and a foam inhibitor may well serve as a cavitation inhibitor.

5-5.2 EXAMPLES OF FOAM INHIBITORS

Methyl silicone oils, e.g., those with viscosities in the range of 50,000 mm^2/s at 38°C (100°F), are effective foam inhibitors at the remarkably low concentration of 10 ppm. They are generally considered "insoluble" inhibitors because to be effective, they must be present in an amount that exceeds their solubility. If the silicones are present in an amount that does not exceed their solubility or if the insoluble particles are larger than 100 μm (0.004 in.), they promote foaming (Ref. 53). Dimethylsiloxanes and polyethers

Downloaded from http://www.everyspec.com

are being used as antifoams in motor oils. Since the materials are not very oil soluble, they separate from the oil on the surface of bubbles and cause the bubbles to rupture by reducing the surface tensions (Ref. 27). Other defoamers in the patent literature include the calcium soaps of wool olein, the sodium alkyl esters of sulfuric acid, potassium oleate, and esters of sulfonated ricinoleic acid (Ref. 51). Other additives are halogenated compounds, organic sulfates, polyesters, polyhydroxy esters, polyhydroxy alcohols, and hydroxyamines (Ref. 52).

5-5.3 EMULSIFIERS AND DEMULSIFIERS

Emulsions consist of two immiscible or partly miscible liquid phases, a dispersed phase of small particles in a continuous phase. Since the lubricating properties of an emulsion approximate the lubricating properties of the continuous phase, certain water-in-oil emulsions have received attention as fire-resistant hydraulic fluids (Ref. 54). These emulsions, which usually contain about 40% water, are stabilized by emulsifying agents that are characterized as molecules having one group of atoms that is hydrophilic and a second group of atoms that is oleophilic. A molecule so constructed is capable of orienting itself at an oil-water interface, decreasing the interfacial tension, and stabilizing the emulsion. These additives, which may frequently be organic acids or soaps, can be selected from known classes of nonionic, anionic, or cationic surface active agents.

More often in hydraulic systems additives that induce demulsification are required. Impurities that cause foaming can also cause emulsions if water happens to be present in the system. If the water is emulsified and cannot be readily removed through drainage, lubricated parts can be damaged. Polar impurities can influence the development of either water-in-oil or oil-in-water emulsions.

The selection of a suitable demulsifying agent depends in part on whether an oil-in-water or a water-in-oil emulsion must be counteracted. An additive that stabilizes an oil-in-water emulsion will generally destroy a water-in-oil emulsion, and vice versa. Thus most demulsifiers are also surface active agents. Some examples of specific additives are petroleum sulfonic acids, or salts; dimerized, unsaturated, aliphatic monocarboxylic acids; and sulfonated castor oil (Ref. 7).

5-6 LUBRICITY

5-6.1 HYDRODYNAMIC VS BOUNDARY LUBRICATION

Lubricity is a measure of the ability of a lubricant to reduce the friction or wear between two solid surfaces in contact with each other. The lubricant may be called upon to reduce friction in one of several ways, depending on the film thickness and the particular conditions under which the system is operating. Two important variables are temperature and pressure, which in turn influence the film thickness of the lubricant between the two surfaces being lubricated.

When the film thickness is greater than 0.635 μm (25 × 10^{-6} in.), the mode of lubrication is hydrodynamic. Under these conditions the moving surfaces never come in contact with each other, and the friction is largely determined by the viscosity of the lubricating fluid. The only additives of importance in hydrodynamic lubrication are polymer additives because they increase the viscosity of the fluid.

As the pressure or temperature between the lubricated surfaces is increased, the lubricating film can become sufficiently thin that metal-to-metal contact occurs and boundary lubrication develops. Under these conditions the fluid is a carrier for boundary or extreme-pressure additives and a coolant.

If poor geometric conformity of surfaces exists, the effect of the elastic deformation of the surfaces must be considered. This lubrication response is termed elastohydrodynamic (EHD) and is characterized by the condition in which elastic deformation of the surfaces plays a significant role in the hydrodynamic lubrication.

5-6.2 OILINESS, ANTIWEAR, AND EXTREME-PRESSURE ADDITIVES

Additives for boundary lubrication are divided into three somewhat indefinite classes: oiliness agents, antiwear additives, and extreme-pressure additives. The classification is made on the basis of the stringency of the temperature and pressure requirements; temperature is the more important of the contributing factors. Each of the three classes of additives is effective insofar as it modifies a lubricated surface, reduces the friction, or protects the surface from damage.

5-6.2.1 Oiliness Additives

Oiliness additives, which are usually effective at low temperatures and pressures, are polar molecules that can form monomolecular films on a lubricated surface. The most frequently cited example is oleic acid. Oleic acid forms an oriented film that has a relatively high energy of displacement at the interface of the lubricant and the metal by adsorption of the acid portion of the molecule on the metal surface.

5-6.2.2 Antiwear Additives

Most conventional antiwear additives work by forming low-shear films on metal surfaces. Halogenated alkanes, particularly chlorinated materials, were used often at one time. They have been replaced, however, by more effective and less corrosive materials for all but single-use cases, such as cutting oils. The overwhelming number of antiwear additives are based on compounds containing sulfur and/or phosphorus capable of depositing polysulfide or phosphate films on the surface involved. Foremost among these are the zinc dialkyldithiophosphates and tricresyl or triphenyl phos-

Downloaded from http://www.everyspec.com

phate. Under high pressures and temperatures, phosphorus-containing additives are thought to reduce wear effectively through their ability to form iron (II) phosphate and its hydrate on the metal surface (Ref. 55). The formation of the iron (II) phosphates has been attributed to the presence of polar impurities, perhaps acidic hydrolysis products, of the phosphate (Refs. 56, 57, and 58). Other salts of dithiophosphoric acid, such as O,O-diesters, that have also been used as antiwear additives include the following: tetralkyl ammonium, calcium, magnesium, zinc, nickel, and cadmium. Several sulfur-molybdenum compounds have also been shown to be effective antiwear additives (Ref. 59).

A new group of synthetic antiwear additives has been formulated in recent years (Ref. 60). These products for hydraulic fluids (commonly MIL-H-5606 and MIL-H-6083) have been developed to overcome possible adverse health issues concerning the nonsynthetic antiwear additives.

5-6.2.3 Extreme-Pressure Additives

Extreme-pressure additives are used under the most severe conditions and are usually sulfurized or chlorinated organic materials. Compounds containing benzylic sulfur are particularly effective. Under conditions of extreme pressure or temperature, welding of the two mating surfaces can occur with consequent seizure, galling, or scuffing. In a lubricant containing an extreme-pressure additive, when high temperatures that can produce welding are approached, the additive presumably undergoes a chemical reaction with the metal surface to form a metal chloride or sulfide film that protects the surface. The sulfur-containing additives protect the surface and may be used with lead naphthenate to obtain a protective lead-sulfide coating. Other salts of dithiophosphoric acid, such as O,O-diesters, that have also been used as extreme-pressure agents include the following: tetralkyl ammonium, calcium, magnesium, zinc, nickel, and cadmium.

5-6.3 FRICTION MODIFICATION ADDITIVES

Friction modifiers are surface active agents that are closely related to extreme-pressure additives in structure and mode of action. Examples of friction modifiers are amides derived from chlorinated fatty acids, glycerol esters, and sulfurized oleated tallow oils (Refs. 61 and 62). Additives that deposit molybdenum disulfide (MoS_2) are also effective friction modifiers (Ref. 59). Friction modifiers are currently being used at treating dosages from 0.5 to 1.0 wt%.

5-6.4 CLASSES OF LUBRICITY ADDITIVES

Lubricity additives function through their action at the surface of the metal to be lubricated; therefore, lubrication of different metal combinations may require the use of different additives. All base stocks are not equally susceptible to additive modification, and the effectiveness of antiwear additives can be modified by the presence of other additives. For these reasons a very large number of compounds and materials have been investigated as potential boundary lubricants in hydraulic fluids.

5-6.4.1 Additives for Mineral Oils and Esters

Ester-base fluids and mineral oils are readily susceptible to additive modification by a variety of materials. Phosphates and phosphites, particularly tricresyl phosphate, have received considerable attention as additives (Ref. 8). Acid phosphates and even phosphoric acid show antiwear properties in the proper concentration, but too large a concentration of phosphoric acid can lead to chemical erosion (Refs. 1 and 6). Phosphates and phosponates containing long alkyl chains provide good lubricity and, in addition, function as antioxidants (Ref. 63). The effectiveness of tricresyl phosphate is reduced in the presence of polar compounds, such as petroleum sulfonates, which have a greater affinity for metal surfaces than does tricresyl phosphate (Ref. 1). Metal dithiocarbamates function as antiwear additives in ester fluids but not in mineral oils. Fluorinated esters are as susceptible to antiwear additives as nonfluorinated esters (Ref. 64), but many additives are not sufficiently soluble to be used in the fluorinated esters.

5-6.4.2 Additives for Silicon-Containing Fluids

A great many additives that are effective in mineral oil and ester fluids are ineffective in silicones, silicates, and siloxanes. Silicones show especially poor additive susceptibility for lubricating steel-on-steel. The wear properties can be improved in ester-silicone blends, but such a high proportion of ester is required that the good high-temperature properties of the silicones are lost (Refs. 1 and 65).

Silicon-containing liquids are usually not susceptible to modification by antiwear additives. There is evidence that the silicon reacts preferentially with the metal to be lubricated and forms a coating on the metal that is no longer reactive with the antiwear additive. Silicones and silicates themselves can be used as additives in esters and mineral oils to obtain antiwear properties; a fact which suggests that a soft, inert silicon-iron alloy forms (Ref. 1). Some attempts have been made to modify the chemical structures of silicones to improve their wear properties. Friction and wear studies of chlorinated methylphenyl silicones show an improvement over nonhalogenated methylphenyl silicones, but high friction and wear are still observed with hard steel on soft steel and soft steel on soft steel (Ref. 66). In addition, the chlorine-modified silicones experience a second limitation of being poorer lubricants for steel on copper above 204°C (400°F) than are unmodified silicones (Ref. 66). A great improvement in the lubricity of chlorinated phenylmethylsilicone was found when the liquid was cooked with tin tetrachloride (Ref. 12) and when formulated with dibutyl-chlorendate. Fluorosilicone fluids are reported

Downloaded from http://www.everyspec.com

to have at least equivalent wear performance on the Shell Four-Ball Extreme-Pressure Tester to di-2-ethylhexyl sebacate (Ref. 67).

A final class of silicon-containing fluids, the tetraalkylsilanes, have better additive susceptibility than the silicones, silicates, or siloxanes. Although tetraalkylsilane-base fluids exceed target wear limits, their wear properties can be improved with phosphates, phosphites, phosphonates, phosphorothioates, and sulfonated petroleum derivatives (Refs. 8 and 68).

5-6.4.3 Additives for Aryl Ether Fluids

A variety of additives effectively impart improved wear properties to polyphenyl ethers (Ref. 16). These additives include bis(cyclopentadienyl)titanium bis(trichloroacetate) and its polysulfide derivative, diphenyltin bis(trichloroacetate), bis(triphenylphosphine) nickel dichloride, and particularly trichloroacetic acid. Tricresyl phosphate at the 5% level is also effective in aryl ethers (Refs. 65 and 69).

5-7 POUR POINT DEPRESSANTS

The pour point is the lowest temperature at which an oil will pour or flow when it is cooled, without disturbance under a specified set of conditions (Ref. 27). Pour point depressants lower the pour point of an oil. This is particularly important for meeting many low-temperature specifications and for proper performance of the lubricant in cold climates.

An oil that does not readily crystallize may be cooled to a temperature at which the viscosity becomes so great that the oil will not flow under the conditions of the pour point test. This viscosity, or glassy pour point, is inherent in the chemical nature of the oil and can be modified only through the blending of oils or mixing of oils with light diluents.

Petroleum oils that contain a small percentage of wax may cease to flow at a much higher temperature due to the formation of a network of wax crystals. Such a "waxy" pour point may be lowered through the use of additives. A number of explanations have been offered for the mode of action of these additives, but their effect is thought to depend on the ability of the additive to modify the crystallization process so that more and smaller crystals with a higher volume-to-surface area ratio are obtained. The modified crystals do not form networks so easily (Refs. 49 and 70).

Most of the commercial pour point depressants are organic polymers containing from C_{10} to C_{20} carbon side chains, the length of which depends on the particular application (Ref. 71). Materials that are used as commercial additives include the polyalkylnaphthalenes, polymethacrylates, and alkylated polystyrenes. Examples of materials used as pour point depressants include derivatized alkyl methacrylate/acrylate copolymers, olefin copolymers, vinyl ester copolymers, alkylated polyalphaolefins polystyrene, esters from maleic anhydride-styrene copolymers, and alkylated naphthylenes.

Pour point depressants are extremely potent additives. Common treating dosages range from 0.1 to 0.5 wt% of the additive concentrates.

5-8 ELASTOMER SWELL ADDITIVES

It is desirable that elastomeric seals swell to some extent (about 5%) when they are in contact with a hydraulic fluid in order to seal the system more effectively. Certain fluids, however, notably the silicates and siloxanes, are poor rubber solvents but good solvents for rubber plasticizer. The result is that the plasticizer can be extracted from the rubber with consequent shrinking and hardening.

The approach to solving this problem is addition of 5 to 15% of compounds to the fluids that can act as rubber plasticizers (Refs. 16, 72, and 73). Esters, such as butyl oleate, di-2-ethylhexyl sebacate, and dibutyl phthalate, and certain aromatic compounds have been most commonly used in this application. With such large quantities the function of the added material is not so much an additive as a modification of the base liquid through blending. In so modifying a liquid special attention must be given to changes in its physical properties.

5-9 HYDROLYSIS INHIBITORS

Silicate esters undergo hydrolytic degradation to produce products that are both corrosive and insoluble; carboylic and phosphate esters seldom yield insoluble products on hydrolysis. The primary interest in finding additives that will correct these undesirable properties has been in connection with silicate- and disiloxane-base fluids, although phosphates, phosphonates, and carbocylates have received some attention. Properly inhibited, silicate fluids have been shown to have acceptable hydrolytic stabilities (Ref. 73). In designing a hydraulic fluid, it is often preferable to modify the chemical structure to obtain hydrolytic stability rather than to use inhibitors.

Without inhibitors many silicates tarnish copper and deposit some silica under conditions of hydrolysis at 93.3°C (200°F), but additives, such as metal phenates, phenyl-α-naphthylamine (Refs. 64, 74 and 75), N, N′-dibutyl-p-phenylenediamine (Ref. 9), and p,p′-dioctyldiphenylamine (Ref. 74), are effective at a concentration of 0.1% in stabilizing the fluid. Since the aromatic amines are effective inhibitors in concentrations less than those required for their use as antioxidants, the additive serves a dual purpose. Diphenylamine and phenothiazine are less effective, and phenolic inhibitors are ineffective (Ref. 75).

The inhibitors lose their effectiveness after a compounded hydraulic fluid is exposed to the rubber swell test, presumably as a result of the leaching of the plasticizer from the rubber (Ref. 9). The additives are not effective in hydrolytic stability tests at 204.4°C (400°F) (Ref. 72).

Downloaded from http://www.everyspec.com

5-10 CAVITATION INHIBITORS

Cavitation is a poorly understood phenomenon. There are few data available in the literature on the use of additives to change the cavitation resistance of hydraulic fluids. The usual procedure used in order to avoid damage to structural parts of the hydraulic system from cavitation in the hydraulic fluid is to use materials that are resistant. Softer metals are plastically deformed; hard, brittle metals are pitted. Hard, tough metals, such as cobalt chromium alloys, are very resistant to damage (Ref. 72). Mechanical modifications may also be used, such as pressurizing the reservoir or lowering the position of the hydraulic pump.

There has been some development work, however, on cavitation-inhibiting additives. Studies in the literature suggest that if the cavities consist of a vacuum or the vapor of the liquid, they will collapse with more energy release than if they contain some foreign gas, such as air (Ref. 76). The work that has been done on cavitation inhibitors has been directed toward "filling" the cavities with a "foreign gas".

One of the most successful cavitation inhibitors is water. Although reports are contradictory as to the performance of water, it was used in one study at a ratio of 1:200 in a hydraulic fluid to reduce cavitation erosion in control valves (Ref. 77). The hydraulic fluid was a commercial phosphate ester liquid. Results indicated almost complete elimination of the cavitation damage that had been occurring with the "unwatered" hydraulic fluid. Theoretical work on the use of water in a phosphate ester indicated that 0.5% water would increase the vapor pressure and reduce the cavity collapse pressure (Ref. 76).

Several reports summarized in Ref. 76 have shown that some additives, as well as some contaminants, increase the actual damage from cavitation. The consensus expressed in the literature is that every property of a liquid has a two-fold and opposing effect on cavitation and the resultant damage. The various effects are often interacting and complex. The limited available data suggest that many of the candidate additives for cavitation inhibition may reduce the total amount of cavitation present but increase the resulting cavitation damage.

5-11 BIOCIDES

Biocides are additives designed to inhibit the growth of microorganisms in liquids. The Air Force, Army, and many petroleum companies have sponsored research concerning microbial attack and growth in petroleum products used as fuels (Refs. 78 and 79). However, there has been almost no work on microorganisms in hydraulic fluids. In general, hydraulic fluid specifications contain no requirements for inhibiting microbial growth, e.g., the Air Force does not report any problems, but microbial deterioration of hydraulic fluids might be a problem. In some instances, it may be necessary to add an inhibitor or a biocide to prevent growth.

For a biocide to be successful and desirable, it must

1. Have low toxicity to the skin or upon inhalation
2. Be soluble in hydraulic fluids and their additives
3. Be noncorrosive to metals
4. Be economically suitable, i.e., either inexpensive or effective in very low concentration
5. Have no degrading effect on other properties of the liquid, such as viscosity, stability, and fire resistance.

Although numerous effective inhibitors are available, none satisfy all of these requirements. Many potential inhibitors are toxic to humans, and many that are effective are too expensive or require such large concentrations that they change the properties of the liquid.

Because many liquids used as hydraulic fluids and all jet fuels are hydrocarbons, the biocide research results for jet fuels are, in general, applicable to hydrocarbon hydraulic fluids. Ethylene glycol monomethyl ether (EGME) and diethylene glycol monomethyl ether are water-soluble additives that are as effective as biocides in jet fuel. It has been reported that as little as 0.05% by volume keeps microorganism growth to a minimum (Ref. 80). In some instances, other additives, such as antioxidants or antiwaxing compounds, have been found to have a secondary effect as biocides (Ref. 81).

5-12 SUMMARY OF ADDITIVE EFFECTS ON FLUID PROPERTIES

Fluid additives are used to improve certain fluid properties. Table 5-1 illustrates the manner in which several different fluid properties influence a hydraulic system.

Downloaded from http://www.everyspec.com

TABLE 5-1. FLUID PROPERTIES AND CHARACTERISTICS AND THEIR PRIMARY SYSTEM INFLUENCE

FLUID PROPERTY OR CHARACTERISTIC	PRIMARY INFLUENCE
Bulk Modulus	System Stiffness
Viscosity	Power Losses, Film Thickness, Operational Limit
Density	System Weight
Specific Heat	Thermal Characteristics
Thermal Conductivity	Heat Exchanger Design
Thermal Expansion	Reservoir Sizing
Viscosity Index	Viscosity at Temperature Change in Fluid
Neutralization Number	Fluid Degradation Indicator
Lubricity	Component Wear
Compatibility	System Materials
Volatility	Cavitation and Evaporation
Toxicity	Safety
Foaming	Cavitation and Evaporation
Fire Resistance	Safety
Pour Point	Fluid Flow
Freezing Point	Operational Limit
Boiling Point	Operational Limit
Flash Point	Operational Limit
Storage Stability	Storage Limit
Chemical Stability	Formation of Breakdown Products/Corrosion
Thermal Stability	Deterioration of Fluid Properties
Mechanical (Shear) Stability	Loss of Lubricity and Viscosity
Contamination Stability	Degradation

REFERENCES

1. M. R. Fenske *et al.*, *Fluids, Lubricants, Fuels and Related Materials, Parts I Through VIII*, WADC-TR-55-30, Wright Aeronautical Development Center, Wright-Patterson Air Force Base, OH, 1955.
2. H. Ravner *et al.*, "Antioxidant Action of Metals and Metal-Organic Salts in Fluoroesters and Polyphenyl Ethers", Journal of Chemical and Engineering Data 8, 591 (October 1963).
3. C. E. Boozer *et al.*, "Air Oxidation of Hydrocarbons II. The Stoichiometry and Fate of Inhibitors in Benzine and Chlorobenzene", Journal of the American Chemical Society 77, 3233 (1955).
4. J. R. Thomas, "The Identification of Radical Products From the Oxidation of Diphenylamine", Journal of the American Chemical Society 82, 5955 (1960).
5. G. G. Kanpp and H. D. Orloff, "Improved Lubricating Oil Antioxidants", Industrial and Engineering Chemistry 53, 65 (1961).
6. M. William Ranney, Ed., *Synthetic Oils and Additives for Lubricants*, Chemical Technology Review No. 145, Noyes Data Corporation, Park Ridge, NJ, 1980, pp. 145-61.
7. Klaus, Tewksbury, and Fenske, "Preparation, Properties, and Some Applications of Superrefined Mineral Oils", ASLE Transcript 5, 115 (1962).
8. C. E. Snyder, "Utilization of Synthetic-Based Hydraulic Fluids in Aerospace Applications", Lubrication Engineering 36, 160-5 (1980).
9. N. W. Furby *et al.*, *The Development of High-Temperature Aircraft Hydraulic Fluids*, WADC-TR-54-191, Wright Aeronautical Development Center, Wright-Patterson Air Force Base, OH, 1954.
10. Brown, Holdslock, and McGuire, *Silicone Fluid Research for the Development of High-Temperature Hydraulic Fluids and Engine Oils, Parts I, II, and III*, WADC-TR-56-25, Wright Aeronautical Development Center, Wright-Patterson Air Force Base, OH, 1956.
11. C. Tamborski, G. J. Chen, D. R. Anderson, and C. E. Snyder, "Synthesis and Properties of Silahydrocarbons, a Class of Thermally Stable, Wide Liquid Range Fluids", Industrial and Engineering Chemistry, Product Research & Development 22, 172-8 (1983).

Downloaded from http://www.everyspec.com

12. Murphy, Saunders, and Smith, "Thermal and Oxidation Stability of Polymethylphenylsiloxanes", Industrial and Engineering Chemistry **42**, 2462 (1950).
13. Atkins, Murphy, and Saunders, "Polymethylsiloxanes: Thermal and Oxidation Stabilities", Industrial and Engineering Chemistry **39**, 1395 (1947).
14. H. R. Baker and C. R. Singleterry, "Stabilization of Silicon Lubricating Fluids Above 200°C by Iron, Copper, Cerium, and Other Metal Compounds", Journal of Chemical and Engineering Data **6**, 146 (1961).
15. Baker, Kagarise, Otten, and Sniegoski, "Stabilization of Silicone Lubricating Fluids at 300 to 400°C by Soluble Cerium Complexes", Journal of Chemical and Engineering Data **10**, 110 (1965).
16. Brown *et al.*, *Research and Development on High-Temperature Additives for Lubricants and Hydraulic Fluids, Parts I Through IV*, WADC-TR-59-191, Wright Aeronautical Development Center, Wright-Patterson Air Force Base, OH, 1959.
17. Smith *et al.*, *Research on High-Temperature Additives for Lubricants*, Office Technical Service Report AD281, US Department of Commerce, Washington, DC, 1962.
18. J. R. Stemniski *et al.*, "Antioxidants for High-Temperature Lubricants", ASLE Transcript **7**, 43 (1964).
19. C. E. Snyder, Jr., C. Tamborski, and H. Gopal, "Synthesis and Development of Improved High-Temperature Additives for Polyperfluoroalkylether Lubricants and Hydraulic Fluids", Journal of the American Society of Lubrication Engineers **35**, 451-6 (1979).
20. L. V. Gallacher *et al.*, *Thermally Stable Sulfonate Compositions*, US Patent No. 4,895,674,23, January 1990.
21. H. R. Baker and W. A. Zisman, "Polar-Type Rust Inhibitor—Part I", Industrial and Engineering Chemistry **40**, 2338 (1948).
22. Baker, Jones, and Zisman, "Polar-Type Rust Inhibitors—Part II", Industrial and Engineering Chemistry **41**, 137 (1949).
23. H. R. Baker and W. A. Zisman, "Liquid and Vapor Corrosion Inhibitors", Lubrication Engineering **7**, 117 (1951).
24. C. R. Singleterry and E. M. Solomon, "Neutral and Basic Sulfonates", Industrial and Engineering Chemistry **46**, 1035 (1954).
25. S. Kaufman and C. R. Singleterry, "Micelle Formation by Sulfonates in a Nonpolar Solvent", Journal of Colloid Chemicals **10**, 139-66 (1955).
26. W. D. Bascom, S. Kaufman, and C. R. Singleterry, *Colloid Aspects of the Performance of Oil-Soluble Soaps as Lubricant Additives*. Paper No. 18, Fifth World Petroleum Congress, Section VI, New York, NY, 1959.
27. N. Benfaremo and C. S. Liu, "Crankcase Engine Oil Additive", Lubrication **76**, (1990).
28. Gisser, Messina, and Snead, "Hydroxyarylstearic Acids as Oxidation and Rust Inhibitors in Lubricants", Industrial and Engineering Chemistry **48**, 2001 (1956).
29. Snead, Messina, and Gisser, "Structural Effects of Arylstearic Acids as Combination Oxidation and Rust Inhibitors", Industrial and Engineering Chemistry, Production Research and Development **5**, 222 (1966).
30. R. Hatton, *Introduction to Hydraulic Fluids*, Reinhold Publishing Corporation, New York, NY, 1962.
31. J. Messina and A. Mertwoy, "Inorganic Salts in Mahogony Sulfates and Their Effect on Petroleum Hydraulic Fluids", Lubrication Engineering **23**, 46 (1967).
32. R. E. Dolle, *High-Temperature Corrosion-Preventive Additives for Fluorocarbon Polyether Fluids*, AFML-TR-67-210, Air Force Materials Laboratory, Wright-Patterson Air Force Base, OH, 1967.
33. R. L. Adamczak, R. J. Benzing, and H. Schwenker, *Proceedings of the AFML Hydraulic Fluids Conference*, AFML-TR-67-369, Air Force Materials Laboratory, Wright-Patterson Air Force Base, OH, December 1967.
34. D. Wyllie and A. W. Morgan, "Prevention of Corrosion in Glycerol-Water Hydraulic Fluids", Journal of Applied Chemistry (London) **15**, 289 (1965).
35. C. B. Jordan, *Study of Corrosion Inhibitors and Antioxidants for Alcohols Found in Hydraulic Brake Fluids*, Report No. 28, Engineering Laboratories, Aberdeen Proving Ground, MD, 1955.
36. H. R. Baker, "Volatile Rust Inhibitors", Industrial and Engineering Chemistry **46**, 2592 (1954).
37. J. E. Brophy *et al.*, "Aqueous Nonflammable Hydraulic Fluids", Industrial and Engineering Chemistry **43**, 884 (1961).
38. T. W. Selby, "Non-Newtonian Characteristics of Lubricating Oils", ASLE Transcript **1**, 68 (1958).
39. T. W. Selby, *The Low-Temperature Viscometry of Oils Containing Polyisobutylene and Poly(alkylmethacrylate) as Viscosity Index Improvers*, American Chemical Society, Division of Petroleum Chemicals, Preprints **2**, 89 (1961).
40. W. T. Stewart and F. A. Stuart, "Lubricating Oil Additives", Kobe and Smith, Eds., *Advances in Petroleum Chemistry and Refining*, Vol. VII, Wiley-Interscience Publishers, Inc., New York, NY, 1963.
41. ASTM D 2603-76, *Standard Test Method for Sonic Shear Stability of Polymer-Containing Oils*, American Society of Testing and Materials, Philadelphia, PA, 1976.
42. C. M. Murphy and H. Rarner, "Oxidation Characteristics of Some Diester Fluids", Industrial and Engineering Chemistry **44**, 1607 (1952).
43. T. W. Selby, *Consideration of the Degradation of Polymer Systems on the Basis of Reduced Viscosity*

Downloaded from http://www.everyspec.com

Loss, ASTM Special Technical Publication No. 382, American Society for Testing and Materials, Philadelphia, PA, 1964.

44. R. LeMar, "Factors Affecting Sonic Degradation of Polymer Solutions", Industrial and Engineering Chemistry, Production Research and Development 6, 19-23 (1967).
45. Klaus, Tewksbury, Jolie, Lloyd, and Manning, *Effect of Some High-Energy Sources on Polymer-Thickened Lubricants*, ASTM Special Technical Publication No. 382, American Society for Testing and Materials, Philadelphia, PA, 1964.
46. D. C. Atkins *et al.*, "Synthetic Lubricant Fluids From Branched Chain Diesters, Part II", Industrial and Engineering Chemistry 39, 484 (1947).
47. C. S. Liu *et al.*, "Lubricating Oil Containing Viscosity Index Improver", US Patent 4,812,261, 1989.
48. I. D. Rubin, "Polymers Make the Grade", Chemtech 17, 620 (1987).
49. L. E. Lorensen, "Pour Point Depression I: Mechanism Studies", American Chemical Society, Division of Petroleum Chemicals, Preprints 7, B-61 (1962).
50. L. E. Lorenson and W. A. Hewett, "Pour Point Depression II: Structure versus Activity", American Chemical Society, Division of Petroleum Chemicals 7, 71 (1962).
51. H. H. Zuidema, *The Performance of Lubricating Oil*, Reinhold Publishing Corporation, New York, NY, 1959.
52. *Foaming Characteristics of Hydraulic Fluids and Special Lubricants*, Report PRL-3.48, Petroleum Refining Laboratory, Pennsylvania State College, University Park, PA, December 1949.
53. L. T. Shearer and W. W. Akers, "Foaming in Lube Oils", Journal of Physical Chemistry 62, 1269 (1958).
54. "Fire-Resistant Hydraulic Fluids", Lubrication 48, 161 (1962).
55. D. Godfrey, "The Lubrication Mechanism of Tricresyl Phosphate on Steel", ASLE Transcript 8, 1 (1965).
56. E. E. Klaus and H. E. Bieber, "Effects of P^{32} Impurities on the Behavior of Tricresyl Phosphate-32 as an Antiwear Additive", ASLE Transcript 8, 12 (1965).
57. E. E. Klaus *et al.*, "A Study of Tricresyl Phosphate as an Additive for Boundary Lubrication", ASLE Transcript 11, 155 (1968).
58. F. T. Barcroft and S. G. Daniel, "The Action of Neutral Organic Phosphates as EP Additives", Journal of Basic Engineering 87, 761 (1965).
59. A. R. Sabol and E. H. Baughman, "Improved Process for Molybdenum Phosphosulfurized Hydrocarbon Compositions", US Patent 4,202,781, 1980.
60. Bulletin No. SYN-O-AD 8481, Akzo Chemicals, Inc., Chicago, IL, 1988.
61. N. A. Meinhardt and K. E. Davis, "Novel Carboxylic Acid Acylating Agents Derivatives Thereof, Concentrate and Lubricate Compositions Containing the Same, and Processes for Their Preparation", US Patent 4,234,435, 1980.
62. R. C. Smith *et al.*, "Glycerol Esters in Lubricating Oils as Fuel Economy Additives", United Kingdom Patent Application 2097813 A, 1982.
63. J. Messina *et al.*, "Evaluation of Long Chain Phosphorus Compounds as Lubricity Additives", ASLE Transcript 3, 48 (1960).
64. R. C. Bowers *et al.*, "Boundary Lubrication Studies of Typical Fluoroesters", Lubrication Engineering 12, 245 (1956).
65. Brochure, *Mobil Synthetic Lubricants*, Mobil Oil Corporation, Houston, TX, 1985.
66. R. C. Bowers *et al.*, "Friction and Wear Studies of Chlorinated Methylphenyl Silicones", Industrial and Engineering Chemistry 48, 943 (1956).
67. H. M. Schiefer and J. V. Dyke, "Boundary Lubricating Properties of Fluoroalkyl Silicones in Bench and Pump Tests", ASLE Transcript 7, 32 (1964).
68. A. W. Sawyer and T. M. Medved, *Formulation of Silane-Base, High-Temperature Hydraulic Fluid, Parts I and II*, WADC-TR-58-407, Wright Aeronautical Development Center, Wright-Patterson Air Force Base, OH, 1958.
69. W. A. Marshal, *Energy Transfer Fluid Studies*, ML-TDR-64-154, Materials Laboratory, Wright-Patterson Air Force Base, OH, 1954.
70. G. A. Holder and J. Winkler, "Wax Crystallization From Distillate Fuels, Part I: Cloud and Pour Phenomena Exhibited by Solution of Binary n-Paraffin Mixtures; Part II: Mechanism of Pour Depression; Part III: Effect of Wax Composition on Response to Pour Depressant and Further Development of the Mechanism of Pour Depression", Journal of the Institute of Petroleum 51, 228, 35, and 43 (1965).
71. J. Denis, "Pour Point Depressants in Lubricating Oils", Lubrication Science 1, 103 (1989).
72. R. L. Peeler and S. A. Kovacich, *Development of a Hydrolytically Stable High-Temperature Hydraulic Fluid, Parts I and II*, WADC-TR-57-119, Wright Aeronautical Development Center, Wright-Patterson Air Force Base, OH, 1957.
73. R. LeMar, *Development of a Wide-Temperature-Range Hydraulic Fluid*, RIA Report No. 67-2254, Rock Island Arsenal, Rock Island, IL, 1967.
74. E. E. Klaus, R. E. Hersh, and J. M. Perez, "Paraffinic Resins Have Dual Role as High-Temperature Lubricants and Viscosity Index Improvers", Society of Automotive Engineers Journal 74, 76 (1966).

Downloaded from http://www.everyspec.com

75. N. W. Furby, *Development of High-Temperature Aircraft Hydraulic Fluids*, AF-TR-6685, Materials Laboratory, Wright Air Development Center, Wright-Patterson Air Force Base, OH, November 1951.

76. D. Godfrey and N. W. Furby, "Cavitation of Oils and Hydraulic Fluids", R. L. Adamczak, R. J. Benzing, and H. Schwenker, *Proceedings of the AFML Hydraulic Fluids Conference*, AFML-TR-67-369, Air Force Materials Laboratory, Wright-Patterson Air Force Base, OH, December 1967.

77. W. Hampton, "The Problem of Cavitation Erosion in Aircraft Hydraulic Systems", Aircraft Engineering **38**, 8 (1966).

78. J. Sharpley, *Elementary Petroleum Microbiology*, Gulf Publishing Company, Houston, TX, 1966.

79. J. Davis, *Petroleum Microbiology*, Elsevier Publishing Company, New York, NY, 1967.

80. D. O. Hetzman, "The Control of Bacterial and Fungal Growth in Jet Fuels by Use of a Fuel Additive", Developments in Industrial Microbiology **6**, 105 (1964).

81. G. C. Blanchard and C. R. Goucher, *Mechanism of Microbiological Contamination of Jet Fuel and Development of Techniques for Detection of Microbiological Contamination, Part II*, APL-TDR-64-70, Aeropropulsion Laboratory, Wright-Patterson Air Force Base, OH, February 1966.

BIBLIOGRAPHY

D. C. Atkins *et al.*, "Synthetic Lubricant Fluids From Branched-Chain Diesters—Part II", Ind. Eng. Chem. **39**, 484-99 (1947).

J. E. Brophy *et al.*, "Aqueous Nonflammable Hydraulic Fluids", Ind. Eng. Chem. **43**, 884-92 (1961).

L. J. Gschwender, D. R. Anderson and G. Chen, *Development of High-Temperature –54 to 316°C Hydraulic Fluids for Advanced Strategic Air-Launched Missile (ASALM) Application*, Technical Report No. UDR-TR-81-52, University of Dayton Research Institute, Dayton, OH, July 1981.

L. J. Gschwender, D. R. Anderson and G. Chen, *Development of High-Temperature –54 to 316°C Hydraulic Fluids for Advanced Strategic Air-Launched Missile (ASALM) Application*, AFWAL-TR-81-4163, Air Force Wright Aeronautical Laboratory, Air Force Systems Command, Wright-Patterson Air Force Base, OH, December 1991.

L. J. Gschwender and C. E. Snyder, Jr., "High-Temperature Hydraulic Fluids", Esslinger Tribology 2000 Conference Proceedings and J. of Synthetic Lubrication **9**, 2, 115-25 (1992).

L. J. Gschwender, C. E. Snyder, Jr., D. R. Anderson and G. W. Fultz, "Determination of Storage Stability of Hydraulic Fluids for Use in Missiles", Lubrication Engineering **40**, 659-63 (1984).

L. J. Gschwender, C. E. Snyder, Jr., G. J. Cehn, A. A. Krawetz, T. Togrov, and G. Musil, "Dynamic Oxygen Absorption of Model Silahydrocarbon Fluids at Elevated Temperatures", Lubrication Engineering **46**, 92-103 (1990).

L. J. Gschwender, C. E. Snyder, Jr., and G. Driscoll, "Alkyl Benzenes— Candidate High-Temperature Hydraulic Fluids", Lubrication Engineering **46**, 6, 377-81 (1990).

L. J. Gschwender, C. E. Snyder, Jr., and G. W. Fultz, "Development of a –54 to 135°C Synthetic Hydrocarbon-Based, Fire-Resistant Hydraulic Fluid", Lubrication Engineering **42**, 8, 485-90 (1986).

L. J. Gschwender, C. E. Snyder, Jr., and Shashi K. Sharma, "Pump Evaluation of Hydrogenerated Polyalphaolefin Candidates for a –54 to 135°C Fire-Resistant Air Force Aircraft Hydraulic Fluid", Lubrication Engineering **44**, 4, 324-9 (1988).

L. J. Gschwender, C. E. Snyder, Jr., and S. K. Sharma, "Development of a –54 to 175°C High-Temperature Nonflammable Hydraulic Fluid, MIL-H-53119, for Air Force Systems", Lubrication Engineering (in review).

R. C. Gunderson and A. W. Hart, *Synthetic Lubricants*, Reinhold Publishing Corporation, New York, NY, 1962.

V. K. Gupta, M. Prazak, L. J. Gschwender, and C. E. Snyder, Jr., "Thermal Stability Characteristics of a Nonflammable Chlorotrifluoroethylene (CTFE)-Base Stock Fluid", Lubrication Engineering **46**, 9, 601-5 (1990).

Klaus, Tewksbury, and Fenske, "Preparation, Properties, and Some Applications of Superrefined Mineral Oils", ASLE Trans. **5**, 115-26 (1962).

R. LeMar, *Development of a Wide-Temperature-Range Hydraulic Fluid*, RIA Report No. 67-2254, Rock Island Arsenal, Rock Island, IL, 1967.

C. E. Snyder, Jr., G. W. Gandee, L. J. Gschwender, T. L. Graham, Jr., W. E. Berner, and W. B. Campbell, "Nonflammable Aircraft Hydraulic Systems Development", *Proceedings From American Institute of Aeronautics and Astronautics Aircraft Systems and Technology Conference*, Dayton, OH, 11-13 August 1981, 88-97, American Institute of Aeronautics and Astronautics, Washington, DC.

C. E. Snyder, Jr., and L. J. Gschwender, "Development of a Nonflammable Hydraulic Fluid for Aerospace Applications Over a –54 to 135°C Temperature Range", Lubrication Engineering **36**, 458-65 (1980).

C. E. Snyder, Jr., and L. J. Gschwender, "Liquid Lubricants for Use at High Temperatures", ASLE Special Publication SP-15, *Solid and Liquid Lubricants for Extreme Environments*, American Society of Lubrication Engineers, Atlanta, GA, 1984.

C. E. Snyder, Jr., and L. J. Gschwender, "Nonflammable

Downloaded from http://www.everyspec.com

Hydraulic Fluid System Development for Aerospace", *Proceedings from the 4th International Colloquim of Synthetic Lubricants and Operational Fluids*, Esslingen, West Germany, January 1984.

C. E. Snyder, Jr., and L. J. Gschwender, "Nonflammable Hydraulic Fluid System Development for Aerospace", J. of Synthetic Lubrication 1, 188-200 (1984).

C. E. Snyder, Jr., and L. J. Gschwender, "Perfluoropolyalkyl Ethers—Liquid Lubricants of the Future?", *Advances in Engineering Tribology*, STLE Publications, Chicago, IL, 1991.

C. E. Snyder, Jr., and L. J. Gschwender, "Aerospace Application of Synthetic Fluids and Lubricants", *STLE Handbook of Tribology and Lubrication, Vol. III*, R. Booker, Ed., STLE Publications, Chicago, IL, 1993.

C. E. Snyder, Jr., and L. J. Gschwender, "Aerospace", *Synthetic Lubricants and High-Performance Functional Fluids*, R. L. Shubkin, Ed., Marcel Dekker, Inc., New York, NY, 1993.

C. E. Snyder, Jr., L. J. Gschwender, and W. B. Campbell, "Development and Mechanical Evaluation of Nonflammable Aerospace -54 to 135°C Hydraulic Fluids", Lubrication Engineering 38, 41-51 (1982).

C. E. Snyder, Jr., L. J. Gschwender, G. J. Morris, and W. B. Campbell, "Investigation of Air Force MIL-H-5606 Hydraulic System Malfunctions Induced by Chlorinated Solvent Contamination", Lubrication Engineering 37, 457-61 (1981).

C. E. Snyder, Jr., L. J. Gschwender, K. Paciorek, and J. Nakahara, "Development of a Shear Stable Viscosity Index Improver for Use in Hydrogenerated Polyalphaolefin-Based Fluids", Lubrication Engineering 42, 9, 547-57 (1986).

C. E. Snyder, Jr., L. J. Gschwender, and C. Tamborski, "Linear Polyperfluoroalkyl Ether-Based Wide-Liquid-Range High-Temperature Fluids and Lubricants", Lubrication Engineering 37, 344-9 (1981).

C. E. Snyder., Jr., L. J. Gschwender, C. Tamborski, and G. J. Chen, "Development of High-Temperature (-40° to 288°C) Hydraulic Fluids for Advanced Aerospace Applications", Lubrication Engineering 38, 173-8 (1982).

W. A. Wright and W. W. Crouse, "General Relationships for Polymer-Petroleum Oil Blends", Ind. Eng. Chem., Prod. Res. and Dev. 3, 153-69 (1964).

Downloaded from http://www.everyspec.com

CHAPTER 6
GUIDE TO SELECTION OF A HYDRAULIC FLUID

This chapter begins with a discussion of fluid compatibility with system materials. This is followed by paragraphs describing typical fluid power applications with emphasis on the fluid requirements for each application. The chapter ends with a checklist to aid in determining the characteristics of a fluid needed for a specific application. An example is provided to demonstrate the use of the checklist.

6-0 LIST OF SYMBOLS

HGR = heat generation rate W (Btu/h)
Δp = pressure drop, Pa (lb/in.^{2})
Q = flow rate, m^3/s (gal/min)
C_p = specific heat, J/(kg·K) (Btu/(lbm·R))
M = mass flow rate, kg/s (lbm/h)
ΔT = temperature drop, K (R)

6-1 INTRODUCTION

Correct and purposeful selection of a hydraulic fluid is vital to overall system operation. This chapter presents an overview of major applications for hydraulic fluids and the conditions that dictate the use of a particular fluid. Fluid compatibility with the system must first be ensured. This includes the base metal; surface coating, such as platings and paints; elastomers; and other fluids with which the system fluid will come into contact.

Application-specific uses of hydraulic fluids must be understood and accounted for. Even though many hydraulic fluids are suitable for many applications, individual applications often require specific fluid characteristics. The hydraulic system designer must be knowledgeable about hydraulic fluid requirements and selection guidelines.

6-2 COMPATIBILITY

A hydraulic fluid must be compatible with the materials used in the hydraulic system, which includes metals, plastics, surface coatings, elastomers, and occasionally other materials of construction, lubricants, and other hydraulic fluids. If the hydraulic fluid in any way attacks, destroys, dissolves, or changes any part of the hydraulic system, the system may become inoperable. Conversely, any changes in the hydraulic fluid caused by interaction with the system materials can also cause system malfunction. Therefore, compatibility of a hydraulic fluid with the system means that the fluid should not attack the system and the system should not attack the fluid.

Compatibility must be considered from several points of view. First, the hydraulic fluid should be compatible with the hydraulic system. Of primary concern is compatibility with the metals of construction and the elastomers used for sealing. Also important are the various surface treatments of materials in or near the system, such as paints and special surface finishes. Second, the hydraulic fluid should be compatible with the system environment. Breakage, leakage, and spillage all too frequently bring the hydraulic fluid into contact with its immediate environment. Of concern here are paints, fabric or plastic linings or covers, insulation of electrical wiring, and structural materials used near the hydraulic system. Third, the hydraulic fluid should be compatible with other liquids and lubricants it may contact. Of concern here are additive susceptibility, use of substitute hydraulic fluids, and choices of lubricants for the system. Each of these factors must be examined both individually and in combination for compatibility with the hydraulic fluid.

Determination of the compatibility of a hydraulic fluid with the hydraulic system is often difficult. Because of the wide range of operating conditions and the large number of possible materials, there have been very few Federal or American Society for Testing and Materials (ASTM) test procedures developed to determine compatibility. When a question of compatibility arises, the normal test procedure is to expose the material in question to the hydraulic fluid—under simulated service conditions, if possible—and determine changes in the material. One unique facet of this type of procedure is that emphasis is placed on the material and not on the hydraulic fluid. The question then arises whether compatibility is a property of the hydraulic fluid or of the material. Because compatibility is an interaction between a hydraulic fluid and numerous other materials, hydraulic fluid specifications usually include a limited number of requirements on compatibility. The most frequently encountered examples are requirements on the swelling of rubber. Also most hydraulic fluid specifications require that all liquids qualified under the specification be compatible with each other.

6-2.1 HYDRAULIC FLUID COMPATIBILITY WITH METALS

Compatibility of a hydraulic fluid with the metals used in a hydraulic system is most important. Care must be taken that system design excludes all metals that are damaged by the liquid or that degrade the liquid. Liquid-metal compatibility, in its strictest sense, includes only chemical interrelationships; however, the topic is broadened here to include

Downloaded from http://www.everyspec.com

any influence the hydraulic fluid may have on metal fatigue and cavitation.

Copper, silver, bronze, aluminum, steel, magnesium, and many other metals are commonly used as structural materials in hydraulic systems. Most petroleum-base hydraulic fluids are not normally affected by these materials, although some metals, especially copper, act as catalysts after degradation starts in some petroleum liquids. Many of the newer synthetic fluids may not be compatible with one or more of the conventional metals. For example, diester fluids, such as the turbine engine oil MIL-L-7808 are affected by copper and its alloys above 93°C (200°F). At 260°C (500°F), which is 93 deg C (200 deg F) above its maximum usable temperature, such a diester still has a life of 8 to 12 h in a sealed system. If a small piece of brass or copper is present, the fluid is reduced to a thick, black, molasses-like substance of high acidity and foul odor within an hour (Ref. 1).

Liquid-metal compatibility can be measured by a number of tests. These techniques usually involve exposing the metal to the liquid under a variety of conditions and determining any changes in the liquid or the metals. Many of the tests mentioned in par. 3-4.1, "Chemical Stability", or par. 3-5, "Corrosiveness", are quite useful and have been widely used. Difficulty often arises in attempting to relate test conditions to actual service conditions. Many conditions that occur in service cannot be anticipated and incorporated into the test. One example is galvanic corrosion. Hydraulic fluids may become electrolytes between dissimilar metals during use and cause considerable corrosion. It then becomes necessary to study metal-to-metal couples in the presence of candidate hydraulic fluids. Most fluid manufacturers have conducted extensive research into the liquid-metal compatibility of their products, and data are available to prospective purchasers. In most cases hydraulic fluids are compatible with all common metals used in construction of hydraulic systems, and the fluid manufacturers provide data only for those instances in which the fluid and metal are not compatible.

6-2.1.1 Metal Fatigue and Stress Corrosion

Metals fail through fatigue when they are subjected to excessive local stresses, either cyclic or unidirectional. In both cases the fatigue life of a metal can be affected by its environment. If the environment is corrosive, resistance to fatigue is reduced (Ref. 2). The resultant damage from the combination of corrosion and stress is worse than the damage produced by either individually. Two basic types of combinations of stress and corrosion are recognized: stress corrosion, in which the stress is static and tensile and fatigue corrosion, in which the stress is cyclic. The mode of failure in both instances is similar. As a result of fatigue, corrosion, or a combination of the two, small pits or cracks are produced in the metal. The corrosion then acts on the bottom of the cracks or pits in such a way as to produce a greater stress concentration than would be produced by stress alone. Failure occurs from the progression of the cracks across a section of the metal.

For each metal the degree to which it is affected by stress corrosion is associated with its environment. The hydraulic fluid constitutes the environment "seen" by the metals in the hydraulic system. If the hydraulic fluid is corrosive to the metals, the fatigue resistance of the metals is reduced. However, the environment frequently will not be as corrosive to the metal if the stresses are absent. Even with the potentially serious results of metal fatigue and stress corrosion, the effect of the hydraulic fluid on the fatigue life of a metal is not a problem that occurs very often.

6-2.1.2 Cavitation

Cavitation has been defined as the "process of formation of the vapor phase of a liquid when it is subjected to reduced pressure at constant ambient temperatures" (Ref. 3). Cavitation damage occurs when the resultant vapor cavities in the fluid collapse near a metal surface when exposed to high pressure.

Cavitation damage is often more severe if the cavities consist of a vacuum or of the vapor of the liquid rather than if they contain some foreign gas, such as air. The trend is toward the use of pure fluids along with high-pressure differentials and high-frequency vibration; thus cavitation becomes an increasingly important problem.

Cavitation damage occurs when the moving fluid carries the vapor cavities or air bubbles into a high-pressure area of a pump or other component. Due to the high pressure, the cavity collapses. One result of this collapse is a significant heat generation, which can scorch the fluid. Although this involves only a microscopic area of the fluid, it can result in damaged fluid structure and increased oxidation rate.

Damage to the pump can occur if the vapor cavities or bubbles reach the internal surfaces of the pump before they collapse. This leads to erosion damage, usually in the form of pitting. Two possible mechanisms are suggested as causes for this damage. One is the high-pressure shock wave that occurs during the collapse. Pressures in these wave have been estimated at over 7×10^6 kPa (10^6psi). The second mechanism is a high-velocity microjet of fluid that occurs because of an uneven pressure distribution at the metal surface. This causes a jet to shoot through the center of the cavity. The jet reaches a high velocity and creates a small pit when it impacts the surface (Ref. 4).

Cavitation damage can occur in almost any component in a hydraulic system. However, the damage usually occurs where the required high pressure-low pressure-high pressure sequence occurs often, rapidly, and with high-pressure differentials. The components most subject to damage are the hydraulic pump, venturis, and valves.

Cavitation in venturis occurs when the high fluid velocity in the throat drops the pressure below the vapor pressure of

Downloaded from http://www.everyspec.com

the liquid. Cavitation in valves occurs in a manner similar to that in venturis. Once cavitation is established in a pump, valve, or venturi, the flow rate remains constant unless some physical change is made, such as increasing the throat opening in a venturi.

There are numerous variables that affect cavitation damage. Some variables are mechanical factors of the system design and some are properties of the fluid. Mechanical factors include suction pressure, venting, liquid velocity, film thickness, temperature, and surface roughness. Liquid properties that affect cavitation are vapor pressure, viscosity, density, bulk modulus, surface tension, and additives. The effect of these variables on cavitation is given in Table 6-1.

Table 6-1 highlights the desirable fluid properties that should be specified to help minimize cavitation. These properties are low vapor pressure, high viscosity, and increased surface tension. In general, these properties help to keep the fluid from reaching its boiling point and changing to a vaporous state.

When cavitation of a fluid is believed to be occurring, the designer is cautioned not to be misled if foam (caused by air entrained in the fluid) is observed within the reservoir. As stated previously, cavitation within a system is usually localized and a result of low pressure or repeated low-high pressure cycling.

6-2.2 ELASTOMERS

Almost all seals and packings used in a hydraulic system are made from elastomers—synthetic or natural rubbers. An elastomer is a material exhibiting little plastic flow and quick and nearly complete recovery from an extending force (Ref. 5). Such materials are usually modified by additives, fillers, and other compounding ingredients and then cured to make a finished elastic compound. The number of basic elastomers is small, but the variety of finished compounds that can be made is almost infinite. It is usually possible to choose an elastomer type and develop a compound compatible with the hydraulic fluid of interest under any normal environmental conditions.

The hydraulic fluid usually has more effect on the seal or packing compound than the compound has on the hydraulic fluid. In most instances the compound is almost inert as far as any harmful effects on the liquid are concerned unless additives in the seal materials are extracted by the liquid. However, some liquids attack and destroy some seal materials. The usual method of determining whether a liquid and an elastomer are compatible is to measure selected properties of the elastomer before and after immersion in the liquid. The common properties used to compare or evaluate various elastomers are described in Table 6-2. Other properties of importance not listed in Table 6-2 are corrosive

TABLE 6-1. EFFECT OF MECHANICAL AND LIQUID VARIABLES ON CAVITATION (Ref. 3)

VARIABLE	CAVITATION	COMMENT
MECHANICAL FACTORS		
Increasing Suction Pressure	Reduced	Increased pressure maintains a positive pressure at the pump inlet.
Venting	Reduced	Venting reduces cavitation if it deaerates the system and removes high-vapor-pressure dissolved gases.
Increasing Liquid Velocity	Increased	
Reducing Lubricant Film Thickness	Increased	Cavitation increases probably because the film is in compression and pressure differences are large.
Increased Temperature	Increased	Cavitation and cavitation damage probably increase due to higher vapor pressure.
Increased Surface Roughness	Increased	Cavitation probably increases because of the creation of more high-low-high pressure sites.
LIQUID FACTORS		
Lower Vapor Pressure	Reduced	
Higher Viscosity	Reduced	
Higher Density	Increased	
High Bulk Modulus	Increased	
Increased Surface Tension	Reduced	

Downloaded from http://www.everyspec.com

TABLE 6-2. PROPERTIES OF ELASTOMERS

PROPERTY	DEFINITION
Hardness	Hardness measured in points on the Shore A durometer scale calibrated to a durometer reading of 100 points on flat glass
Tensile Strength	The force in MPa or psi required to rupture a standard specimen
Ultimate Elongation	The increase in length, expressed as a percent of original length, a standard specimen will undergo before breaking
Modulus	The stress at a predetermined elongation, usually 100%
Volume Change	The change in volume expressed as a percent of original volume of an elastomer after contact with a media, e.g., hydraulic fluid
Compression Set	The percent of original deflection by which an elastomer fails to recover in air after a fixed time compressed under specified load and temperature

effects on metals, tear strength, abrasion resistance, thermal resistance, permeability, coefficient of thermal expansion, and coefficient of friction.

The greatest difficulty in evaluating liquid-elastomer compatibility is the selection of test conditions. Seals are subjected to a wide variety of operating parameters including variables such as temperature, pressure, load, speed, abrasion, and dynamic conditions. In addition, changes in the chemistry of the liquid that occur during use are caused by oxidation, thermal processes, corrosion, and contamination. There are also different requirements for static or dynamic seals. Evaluation of dynamic seals must consider the complete range of conditions expected in service because a change in conditions within the expected range may have an effect on the compatibility. In general, the final determination of liquid-elastomer compatibility must be made in the intended system (or a simulated system) over the anticipated range of operating conditions.

6-2.2.1 Basic Elastomer Materials

Many elastomer materials have been developed for use as seals and packings for hydraulic components and systems. A brief description of each of the 12 most commonly used basic types of elastomers is given in the paragraphs that follow (Ref. 5). Some common trade names and recommended uses are given in Table 6-3, a comparative rating of various properties is given in Table 6-4, and Table 6-5 lists data on the compatibility ratings of several commercial hydraulic fluids with the elastomers described.

1. *Nitrile or Buna N (NBR)*

Temperature Range: –54 to 135°C (–65 to 275°F)

This elastomer is a copolymer of butadiene and acrylonitrile. As the nitrile component increases, resistance to petroleum-base liquids increases, but low-temperature flexibility decreases. Nitrile is the most widely used elastomer today. Nitrile compounds are superior to most elastomers with regard to compression set or cold flow and to tear and abrasion resistance.

2. *SBR Rubber (Buna S or GRS)*

Temperature Range: –54 to 107°C (–65 to 225°F)

SBR rubber, a copolymer of styrene and butadiene, is best known under its former designation of Buna S or GRS, which refers to the US Government rubber made during World War II. SBR and natural rubber account for almost 90% of world rubber consumption. These two materials are not generally used in seals, except for those in automotive brake systems.

3. *Butyl Rubber (IIR)*

Temperature Range: –54 to 107°C (–65 to 225°F)

Butyl rubber is an all-petroleum product made by copolymerizing isobutylene and isoprene. Brominated and chlorinated butyl rubbers are also available. Inner tubes and the inside layer of tubeless tires account for most of the butyl rubber consumption. Butyl has excellent resistance to permeation and is used in vacuum applications.

4. *Chloroprene Rubber (Neoprene, CR)*

Temperature Range: –54 to 149°C (–65 to 300°F)

Chloroprene rubbers (known as neoprene) are homopolymers of chloroprene (chlorobutadiene). They were an early synthetic rubber. Chloroprene tends to crystallize in a stressed condition at low temperatures.

5. *Ethylene Propylene Rubber (EPM, EPDM)*

Temperature Range: –54 to 149°C (–65 to 300°F)

EPM has found widespread use because of its excellent resistance to the extensively used phosphate-ester-type hydraulic fluids.

6. *Fluorocarbon Rubber (FKM)*

Temperature Range: –29 to 204°C (–20 to 400°F)

Fluorocarbon rubbers were first introduced in the mid-1950s and have grown to major importance. They withstand temperatures as high as 316°C (600°F) for short periods and as low as –54°C (–65°F) in some static uses. Also they exhibit maximum resistance to deterioration.

Downloaded from http://www.everyspec.com

TABLE 6-3. COMMON TRADE NAMES AND RECOMMENDED USES OF BASIC TYPES OF ELASTOMERS (Ref. 5)

ELASTOMER	TRADE NAMES AND MANUFACTURERS*		RECOMMENDED USES
Nitrile or Buna N (NBR)	Chemigum Paracril Hycar Krynac Ny Syn	Goodyear Tire and Rubber Co. Naugatuck Chemical Goodrich Chemical Co. Polysar Ltd. Copolymer Rubber & Chemical Corp.	Synthetic hydrocarbons MIL-H-83282 MIL-H-46170 Petroleum oils MIL-H-5606 MIL-H-6083 Water Silicone greases and oils Di-ester-base lubricants (MIL-L-7808) Ethylene-glycol-base fluids
SBR (Buna S or GRS)	(Too numerous)		Automotive brake fluid Alcohols (low molecular weight) Water
Butyl Rubber (IIR)	Polysar Butyl Bucar Butyle Exxon Butyl	Polysar Ltd. Columbia Carbon Co. Exxon Chemical Co. USA	Phosphate-ester-type hydraulic fluids (Skydrol, Fyrquel (Cellulube), Pydraul) Ketones (MEK, acetone) Silicone fluids and greases
Chloroprene Rubber (Neoprene, CR)	Neoprene Butaclor Pero-Texneoprene	E. I. duPont de Nemours Co. Distugil Petro-Tex Chemical Co.	Refrigerants (Freon, NH_3) High-aniline-point petroleum oils Mild acid resistance Silicate ester lubricants
Ethylene Propylene Rubber (EPM) and Ehtylene Propylene Diene Rubber (EPDM)	Nordel Royalene Vistalon Epsyn Epcar	E. I. duPont de Nemours Co. Uniroyal Exxon Chemical Co. USA Copolymer Rubber & Chemical Corp. B. F. Goodrich Co.	Phosphate-ester-base hydraulic fluids (Skydrol, Fyrquel (Cellulube), Pydraul) Steam (to 204°C (400°F)) Water Silicone oils and greases Dilute acids Dilute alkalies Ketones (MEK, acetone) Alcohols Automotive brake fluids

(cont'd on next page)

*The use of trade names and manufacturers' names in no way implies endorsement by the US Government.

Downloaded from http://www.everyspec.com

TABLE 6-3 (cont'd)

ELASTOMER	TRADE NAMES AND MANUFACTURERS*		RECOMMENDED USES
Fluorocarbon Rubber (FKM). and Perfluorocarbon Rubber	Viton Fluorel Kalrez Kel-F	E. I. duPont de Nemours Co. Minnesota Mining & Mfg. Co. (3M) E. I. duPont de Nemours Co. 3M (formerly Kellogg)	Synthetic hydrocarbons MIL-83282 MIL-H-46170 Petroleum oils MIL-H-5606 MIL-H-6083 Di-ester-base lubricants MIL-L-7808 MIL-L-6085 Silicate-ester-base lubricants MLO 8200 MLO 8515 OS-45 Silicone fluids and greases Halogenated hydrocarbons (carbon tetrachloride, trichloroethylene) Selected phosphate ester fluids Acids Chlorotrifluoroethylene (CTFE)
Polyacrylate Rubber (ACM)	Cyanacryl HYcar Krynac Thiacril	American Cyanamid Co. B. F. Goodrich Chemical Co. Polysar, Ltd. Thiokol Chemical Corp.	
Polyurethane Rubber (AU, EU)	Adiprene Cyanaprene Disogrin Elastothan Formez Pallathane Vibrathane	E. I. duPont de Nemours Co. American Cyanamid Co. Disogrin Co. Thiokol Chemical Corp. Witco Chemical Corp. Upjohn Co. Uniroyal	
Phosphonitrilic Fluoroelastomer	Eypel F	Ethyl Corp.	Synthetic hydrocarbons Petroleum oils Chlorotrifluoroethylene
Silicone Rubber (SI)	Silastic No trade name No trade name No trade name	Dow Corning Corp. General Electric Union Carbide & Carbon Stauffer Chemical Co.	High-aniline-point oils Dry heat Chlorinated di-phenyls Military aircraft fuels JP-4 JP-5 JP-8
Fluorosilicone (FSI)	Silastic L.S. Sylon	Dow Corning Corp. 3-M	Military aircraft fuels JP-4 JP-5 JP-8
Epichlorohydrin Rubber (CO, ECO)	Herclor Hydrin	Hercules, Inc. B. F. Goodrich	

*The use of trade names and manufacturers' names in no way implies endorsement by the US Government.

TABLE 6-4. COMPARISON OF PROPERTIES OF COMMONLY USED ELASTOMERS (Ref. 5)

	Nitrile or Buna N	SBR or Buna S	Butyl	Chloro-prene	Ethylene Propylene	Fluoro-carbon	Fluoro-silicone	Poly-acrylate	Poly-urethane	Silicone	Epichloro-hydrin	Phosphonitrilic Fluoroelastomer
Ozone resistance	P	P	GE	GE	E	E	E	E	E	E	E	E
Weather resistance	F	F	GE	E	E	E	E	E	E	E	E	E
Heat resistance	G	FG	GE	G	E	E	E	E	F	E	FG	E
Chemical resistance	FG	FG	E	FG	E	E	E	P	F	GE	G	G
Oil resistance	E	P	P	FG	P	E	G	E	G	FG	E	E
Impermeability	G	F	E	G	G	G	P	E	G	P	GE	G
Cold resistance	G	G	G	FG	GE	FP	GE	P	G	E	GE	E
Tear resistance	FG	FG	G	FG	GE	F	P	FG	GE	P	G	FP
Abrasion resistance	G	G	FG	G	GE	G	P	G	E	P	G	F
Set resistance	GE	F	FG	G	GE	G	P	G	E	P	GE	G
Dynamic properties	GE	G	F	F	GE	GE	P	F	E	P	G	F
Acid resistance	F	E	G	FG	G	E	FG	P	P	FG	FG	P
Tensile strength	GE	GE	G	G	GE	GE	F	F	E	P	G	FP
Electrical properties	F	G	G	F	G	F	E	F	FG	E	F	FG
Water/steam resistance	FG	FG	G	F	E	FG	F	P	P	F	F	F
Flame resistance	P	P	P	G	P	E	PF	P	P	F	FG	G

RATINGS
E = excellent
G = good
F = fair
P = poor

Downloaded from http://www.everyspec.com

TABLE 6-5. COMPATIBILITY OF HYDRAULIC FLUIDS WITH ELASTOMERS*

	DYNAMIC AND STATIC								STATIC ONLY	
	Nitrile	Ethylene Propylene	Fluorocarbon	Chloroprene	SBR	Polyacrylate	Poly-urethane	Butyl	Silicone	Fluoro-silicone
Phosphate Ester Liquids										
Skydrol 500 Type 2	4	1	4	4	4	4	4	2	3	3
Skydrol 7000 Type 2	4	1	2	4	4	4	4	1	3	3
Pydraul 10E	4	1	4	4	4	4	4	1	1	4
29EIT 30E, 50E, 65E	4	1	1	4	4	4	4	1	1	1
115Ek	4	1	1	4	4	4	4	1	4	3
Fyrquel 230C, 312 C, 540C	4	1	1	4	4	4	4	1	1	4
150, 220, 300, 550	4	1	1	4	4	4	4	1	1	2
Houghto-Safe 1010, 1055	4	1	1	4	4	4	X	1	3	2
1120	4	1	1	4	4	4	4	1	3	2
MIL-H-19457C	4	1	2	4	4	4	4	1	3	4
Halogen-Containing Liquids										
FC-43	1	1	1	1	4	X	X	1	1	1
FC-73	1	1	2	1	4	X	X	1	1	2
Silicate Ester Liquids										
OS-45 Type III, IV	2	4	1	1	4	X	4	4	4	2
Oronite 8200, 8515	2	4	1	1	4	X	1	4	4	1
Silicone Liquids										
Dow Corning 200, 510, 550, 704, 705, 710	2	1	1	1	1	1	1	1	3	2
Vesilube F-44, F-50	1	1	1	1	1	1	1	1	3	1
Water Base										
(Water-Glycol Solutions)										
UCON Hydrolube J-4	1	1	1	2	1	4	4	1	1	2
Houghto-Safe 271, 620	1	1	2	2	1	4	4	2	2	2
(Water-Oil Emulsions)										
Sunsafe	1	4	1	2	4	4	4	4	4	1
Shell Irus 905	1	4	1	2	4	1	1	4	4	1

*Compatiblity Rating
1 = satisfactory
2 = fair
3 = doubtful
4 = unsatisfactory
X = insufficient data

(cont'd on next page)

Downloaded from http://www.everyspec.com

TABLE 6-5 (cont'd)

	DYNAMIC AND STATIC								STATIC ONLY	
	Nitrile	Ethylene Propylene	Fluorocarbon	Chloroprene	SBR	Polyacrylate	Poly-urethane	Butyl	Silicone	Fluoro-silicone
Petroleum-Base Liquids										
MIL-F-17111B(OS)	1	4	1	2	4	1	3	4	4	2
MIL-H-17672D	1	4	1	2	4	1	1	4	4	1
MIL-H-27601A(USAF)	1	4	1	2	4	1	X	4	3	X
MIL-H-5606F	1	4	1	2	4	2	2	4	4	1
MIL-H-6083E	1	4	1	1	4	1	1	4	4	1
MIL-H-81019D	1	4	1	2	4	2	2	4	4	1
MIL-L-17331H(SH)	1	4	1	2	4	1	1	4	4	X
MIL-L-2104E	1	4	1	1	4	1	1	4	1	1
MIL-L-46167B	1	4	1	1	4	1	4	4	1	1
Synthetic Hydrocarbons										
MIL-H-46170B	1	4	1	2	4	2	2	4	4	1
MIL-H-83282C	1	4	1	2	4	2	2	4	4	X
MIL-H-87257	1	4	1	2	4	2	2	4	4	X
Glycol/Water Glycol										
MIL-H-22072C	1	1	1	1	1	4	4	1	1	1
MIL-H-5559A(AS)	1	1	1	1	1	4	2	1	1	1
SAE J 1703	1	1	1	1	1	1	1	1	3	3
Silicone										
MIL-B-46176A	1	1	1	1	1	1	1	1	3	3
Polysiloxane										
MIL-S-81087C	1	1	1	1	1	1	1	1	3	X
VV-D-1078B	2	1	1	1	1	1	1	1	3	X
MIL-B-46176	2	1	1	1	1	1	1	1	3	X
Phosphate Ester										
MIL-H-19457D(SH)	4	2	1	4	4	4	4	1	3	4
Chlorotrifluoroethylene Polymer										
MIL-H-53119	4	2	1	2	1	1	1	1	4	X

*Compatibility Rating

1 = satisfactory
2 = fair
3 = doubtful
4 = unsatisfactory
X = insufficient data

Downloaded from http://www.everyspec.com

Downloaded from http://www.everyspec.com

7. *Fluorosilicone (FSi)*

Temperature Range: –62 to 177°C (–80 to 350°F)

Fluorosilicone rubbers combine the good extreme temperature properties of silicone rubber with fuel and oil resistance but have relatively weak mechanical properties compared to other elastomers.

8. *Polyacrylate Rubber (ACM)*

Temperature Range: –18 to 177°C (0 to 350°F)

ACM rubber has outstanding resistance to petroleum fuels and oils. There are numerous types of ACM rubber available; all are polymerization products of acrylic acid esters. The greatest usage of ACM rubber is in automatic transmission and power steering gear seals.

9. *Polyurethane Rubber (AU, EU)*

Temperature Range: –54 to 93°C (–65 to 200°F)

Polyurethanes have superior mechanical and physical properties. They cannot, however, withstand water, acids, ketones, and chlorinated or nitro hydrocarbons. They have poor compression set and tend to soften excessively above 121°C (250°F). Because of the many polyurethane rubber compounds and because the minimum temperature at which each may be used varies from compound to compound, no lower temperature restriction can be stated.

10. *Silicone Rubber (Si)*

Temperature Range: –115 to 121°C (–175 to 250°F)

Silicone elastomers are made from silicon, oxygen, hydrogen, and carbon. They have poor tensile strength, tear resistance, and abrasion resistance; however, they have excellent resistance to temperature extremes, especially dry heat. Silicones are not resistant to petroleum liquids but are resistant to many of the synthetic liquids.

11. *Epichlorohydrin Rubber (CO, ECO)*

Temperature Range: –54 to 135°C (–65 to 275°F)

Epichlorohydrin is a recent oil-resistant polymer class addition. The two basic classes, homocopolymers (CO) and copolymers (ECO), have excellent resistance to hydrocarbon oils, fuels, and ozone. It has good high-temperature resistance but only fair compression set at 149°C (300°F). This and the corrosive nature of epichlorohydrin are limiting factors in some applications.

12. *Phosphonitrilic Fluoroelastomer*

Temperature Range: –54 to 135°C (–65 to 275°F)

Phosphonitrilic fluoroelastomer, also known as polyphosphazene, is a semi-inorganic elastomer, characterized by a phosphorus nitrogen backbone with pendant fluorine-containing organic groups attached to the phosphorus. This elastomer is usually vulcanized by reacting with peroxides. Phosphonitrilic fluoroelastomer provides low-temperature flexibility and high-temperature stability, toughness, and good hydrocarbon oil or fluid resistance. The potential range of applications for this elastomer, although extensive, can be limited by its relatively high production cost.

6-2.2.2 Effect of Radiation on Elastomers, Plastics, and Resins

Seals, packings, O-rings, and similar hydraulic system components using elastomers, plastics, or resins may be subject to damaging radiation. Elastomers are much less tolerant of radiation than hydraulic fluids. In fact, hydraulic fluids are generally two to ten times as radiation resistant as elastomers (Ref. 6). Therefore, the seals, packing, O-rings, and similar hydraulic system components are typically the "weakest link" in the hydraulic system against radiation effects.

The major source of radiation is nuclear weapons. The types of radiation typically of concern are gamma radiation and neutrons. Absorption of equal amounts of energy produces equivalent changes in the mechanical properties of seal material, regardless of the type of radiation emitted (Refs. 7 and 8). These mechanical properties include hardness, elongation, and tensile strength.

Before selecting a material for use in a radioactive environment based solely on its high radiation tolerance, other environmental conditions must be considered. For example, although polyurethane ranks high in radiation tolerance, its limiting maximum temperature, water resistance, and compression set resistance may make this a poor material choice in some applications (Ref. 9).

6-2.2.3 Test Methods for Elastomer-Liquid Compatibility

The usual procedure for determining the compatibility of an elastomer with a particular liquid is to measure changes in various properties of the elastomer after immersion in the liquid. The most commonly used indicators of deterioration of an elastomeric compound are excessive volume swell or shrinkage, a large decrease or increase in hardness, and an extreme change in tensile strength or elongation. Many of the changes, such as loss of hardness and tensile strength, that various media cause in an elastomeric compound cannot be considered deterioration of the compound. Often such changes are temporary; the compound returns to its original state after removal from the media. Also certain changes, such as swelling of rubber, are often required for satisfactory operation of the system. Almost all seal designs require a definite amount of swelling to effect a complete seal. Table 6-6 lists the rubber swell limits of several military specification hydraulic fluids.

Downloaded from http://www.everyspec.com

TABLE 6-6. RUBBER SWELL LIMITS OF MILITARY SPECIFICATION HYDRAULIC FLUIDS

MILITARY SPECIFICATION FLUID	TEST METHOD OR TEST DESCRIPTION	TYPE OF RUBBER	SWELL LIMITS, % Min	Max
Petroleum-Base Liquids				
MIL-F-17111B(OS)	NR			
MIL-H-17672D	NR			
MIL-H-27601A(USAF)	See fluid specification.	NBR-L	15	25
MIL-H-46001D	NR			
MIL-H-5606F	Method 3603*	NBR-L	19	30
MIL-H-6083E	Method 3603*	NBR-L	19	28
MIL-H-81019D	Method 3603*	NBR-L	19	28
MIL-L-17331H(SH)	NR			
MIL-L-2104F	See fluid specification.	Buna N	0	5
MIL-L-46167B	See fluid specification.	Buna N	0	5
Synthetic Hydrocarbons				
MIL-H-46170B	Method 3603*	NBR-L	15	25
MIL-H-83282C	Method 3603*	NBR-L	18	30
MIL-H-87257	Method 3603*	NBR-L	19	30
Glycol/Water Glycol				
MIL-H-22072C	See fluid specification.	"O" ring per MIL-P-25732	**	**
MIL-H-5559A(AS)	NR			
SAE J 1703	**			
Silicone				
MIL-B-46176A	**			
Polyphenyl Ether				
MIL-L-87100(USAF)	NR			
Polysiloxane				
MIL-S-81087C	NR			
VV-D-1078B	NR			
Phosphate Ester				
MIL-H-19457D(SH)	Method 3603*			
Chlorotrifluoroethylene Polymer				
MIL-H-53119	Method 3603*	Viton	25	40

NR = Not Reported
*From Federal Test Method Standard 791C
**Numerous rubber swell requirements exist. See fluid specification.

Downloaded from http://www.everyspec.com

Standard test procedures for various properties of elastomers can be found in ASTM standards (Ref. 10). However, two general test methods have been developed specifically to determine the effect of liquids on elastomers: (1) ASTM test for "Changes in Properties Resulting From Immersion in Liquids" (Ref. 11) and (2) Federal Test Methods for "Swelling of Synthetic Rubber" (Refs. 12 and 13). These two test procedures are discussed in the paragraphs that follow:

1. *Changes in Properties of Elastomers Resulting From Immersion in Liquids*

Test Method: ASTM D 471 (Ref. 11)

This method is used to estimate the comparative ability of rubber and rubber-like compositions to withstand the effect of liquids by examination of the material after removal from the liquid. It leaves the selection of the test conditions of temperature and time to the parties involved but recommends the choice of one of eight test temperatures and one of four test periods. Three specimens of the elastomeric material are immersed in the liquid in a test tube for the time and at the temperature specified. After immersion, the specimens are examined for changes in weight, volume, tensile strength, elongation, and hardness. All changes are reported as a percentage of the original value.

2. *Swelling of Synthetic Rubbers*

Test Method: Federal Test Method 3603 (Ref. 12)
Federal Test Method 3604 (Ref. 13)

These test methods describe a procedure used to determine the swelling effect of lubricants on synthetic rubber. Method 3603 is for petroleum products in general, and Method 3604 is for aircraft turbine lubricants. The basic procedures of the test methods, however, are adaptable to other products.

The volume of standardized test rubber sheets 25.4 mm × 50.8 mm × 1.9 mm (1 in. × 2 in. × 0.075 in.) is determined by water displacement. The rubber sheets are immersed in the specimen liquid for 168 h at the specified temperature and then removed, cleaned, and the volume again determined by water displacement. Any change in volume is presented as a percent of the original volume.

6-2.3 COMPATIBILITY WITH COATINGS

Compatibility of hydraulic fluids with paints and other surface protection coatings is a problem that is often ignored in the early design stages. Although it may have been previously determined that a candidate hydraulic fluid is compatible with the materials used in the system, it is still necessary to determine its compatibility with the surface coatings it may contact. The number and types of coatings are many—painted, anodized, phosphatized, nitrided, and plated.

6-2.3.1 Compatibility With Paints

Paints are probably the most common surface coatings encountered. Although paints are normally exterior to the hydraulic system, except in rare cases in which reservoirs or other components have painted interior surfaces, their compatibility with hydraulic fluids must be considered. Hydraulic fluids can come into contact with painted surfaces from spillage during filling, from leaks, and from rupture of hydraulic lines.

Many synthetic liquids have a softening or stripping action on paints that are resistant to petroleum oils and fuels. Phosphate ester fluids, commonly used in commercial aviation, have a marked stripping action on conventional paints. Water-glycol solutions also have a softening and stripping action on many paint finishes. For these and other synthetic hydraulic fluids, the more resistant synthetic finishes must be employed, e.g., epoxy-resin paints. The effect of various types of hydraulic fluids on standard oil- and fuel-resistant paints is summarized in Table 6-7. The data presented in Table 6-7 are generalized, and in every case compatibility of a particular paint with the candidate hydraulic fluid should be checked.

The reader should be aware of MIL-C-53072A(ME) (Ref. 14), which describes the chemical-agent-resistant coatings (CARC) used on tactical military equipment. This specification details the chemical formulations used for primers and topcoats. If the compatibility of a specific fluid is in question, the manufacturer of the fluid should be contacted. Knowledge of the chemical composition of the primers or topcoats should be supplied to the manufacturer as well.

6-2.3.2 Compatibility With Other Coatings

The compatibility of hydraulic fluids with surface coatings other than paints has received very little attention. Other surface coatings would include metal platings, anodizing, nitriding, and phosphate finishing. There are essentially no data available on these topics either in the general literature or on hydraulic fluid manufacturers' data sheets.

TABLE 6-7. EFFECT OF HYDRAULIC FLUIDS ON STANDARD PAINTS*

HYDRAULIC FLUID TYPE	EFFECT ON PAINTS
Mineral Oils	None
Water Glycols	Softens or strips
Water-Oil Emulsions	None
Chlorinated Aromatics	Incompatible
Phosphate Esters	Incompatible
Silicones	None
Synthetic Hydrocarbons	None

*Standard paints are petroleum fuel- and oil-resistant.

Downloaded from http://www.everyspec.com

The lack of data could lead to the conclusion that compatibility with these surface finishes is not a problem. However, because these finishes are either metallic or a chemical conversion of the base metal, the question is one that should be considered in the determination of liquid-metal compatibility.

6-2.4 COMPATIBILITY WITH OTHER LUBRICANTS

The compatibility of a hydraulic fluid with other lubricants it may contact must also be considered. Other lubricants include substitute hydraulic fluids, lubricating oils, greases, and solid film lubricants. Most hydraulic systems in operation today use components not lubricated by the hydraulic fluid. Thus for the system to operate satisfactorily, it is essential that the hydraulic fluid be compatible with any of the lubricants it may contact, either accidentally or by design.

The compatibility of one hydraulic fluid with another is a problem that does not occur often, so it is frequently forgotten. The problem is primarily of concern in replacing one hydraulic fluid with another. When nonadditive petroleum hydraulic fluids were the only ones available, changing to another hydraulic fluid was an easy matter. The advent of extensive use of additives and the synthetic liquids, however, made substitution of hydraulic fluids somewhat more difficult. Many of the synthetic fluids are completely incompatible with one another or with petroleum fluids. However, the fluids described in MIL-H-83282, MIL-H-87257, and MIL-H-46170 are totally miscible and compatible with those in MIL-H-5606 and MIL-H-6083 and can be interchanged with no difficulty.

Water and oil emulsions are often compatible with mineral oil fluids in that they tend to absorb small amounts of the oil into the emulsion. Reduction of the fire-retarding properties is the only resulting harm. Several military specification hydraulic fluids are required to be compatible with certain other fluids by not separating or forming gums, precipitates, or gels. This requirement, however, may deactivate important additives or cause the loss or reduction of important properties.

There are no standard ASTM or Federal Test Methods available that determine directly the compatibility of one hydraulic fluid with another. Simple mixing tests with visual observation to determine separation, emulsification, formation of solids, etc., are normally used to screen for compatibility. However, there are standard test methods to determine the compatibility of lubricating oils and solid film lubricants with hydraulic fluids. Two of them are discussed in the paragraphs that follow:

1. *Compatibility of Turbine-Lubricating Oils*

   Test Method: Federal Test Method 3403 (Ref. 15)

   This method is used to determine the compatibility of aircraft turbine lubricants with specific referee lubricants. Although the test procedure is designed for aircraft turbine lubricants, it can be used to test the compatibility of hydraulic fluids with any referee liquid.

   Three mixtures of 200 mL are prepared with the test liquid and the referee liquid. These mixtures contain 20, 100, or 180 mL of referee fluid. The mixtures are agitated by vigorous shaking and then heated to 100°C (212°F) for 168 h. Next the mixtures are cooled, agitated again, and centrifuged (at 600 to 700 relative centrifuge force) for 10 min. The amount of sediment, if any, is recorded. The test temperature and mixture ratios can be changed to fit the type of fluid being tested.

2. *Fluid Resistance of Dry Solid Film Lubricants*

   Test Method: ASTM D 2510 (Ref. 16)

   This method is used to determine the resistance of dry solid film lubricants to loss of adhesion after exposure to various fluids. A 5.1- to 12.7-μm (0.0002- to 0.0005-in.) thick film of the solid lubricant is sprayed on both sides of a 76-mm × 152-mm (3-in. × 6-in.) anodized aluminum panel and cured. Two test panels with solid film lubricant are immersed one-half of their length in a test fluid at 23°C (73.4°F) for 24 h. The panels are then cleaned with naphtha and examined for softening, lifting, blistering, cracking, or peeling. Lubricant adhesion is tested by pressing a strip of masking tape on the dry film lubricant and removing it rapidly.

   The test fluids listed in the procedure are aircraft turbine oil (MIL-L-7808J), aircraft engine-lubricating oil (MIL-L-6082E, Grade 1100), aircraft turbine and jet fuel (MIL-T-5624N, JP-4), and petroleum-base hydraulic fluid (MIL-H-5606F). The general procedure of the test method, however, is adaptable to any fluid.

6-2.5 COMPATIBILITY WITH ADDITIVES

Liquids for fluid power systems may contain additives to improve the viscosity index, to suppress formation of foam and emulsions, to combat corrosion, etc. If the proper chemicals are not used, one additive may counteract the desired effects of another or may react with another to form insoluble substances that could be more harmful than the original problem. Additives must remain soluble in the fluid at all exposed temperatures and should not react with component parts or contaminants. Chemicals must not be indiscriminately mixed with an oil. Hydraulic fluid suppliers should be consulted on special problems. Additives are discussed in greater detail in Chapter 5.

6-3 FLUID SELECTION CONSIDERATIONS

The various aspects of fluid selection that determine one fluid is "better" than another for a specific application are many and varied. Water would make an excellent hydraulic fluid if cost of the fluid were the only consideration; it is obviously very inexpensive and quite abundant. Also it does

Downloaded from http://www.everyspec.com

not burn and is thus truly nonflammable. However, it promotes rust and corrosion, has a very limited operating temperature range, foams easily, tends to leak rather than seal, and dissolves minerals. Mixtures of water and emulsifying agents do happen to operate well as fire-resistant hydraulic fluids, as described in previous chapters, but generally water alone will not suffice as a hydraulic fluid. The system designer must then ask what fluid properties are most important for a given application and what fluid will provide these properties. The material that follows addresses these questions.

6-3.1 TYPE OF APPLICATION

The specification of a hydraulic fluid necessitates an understanding of the essential requirements for the fluid, the functions the oil must perform in the system, and the categories of fluids from which to choose. In the paragraphs that follow, the specific fluid requirements for common applications will be discussed. The discussion will include the following applications:

1. Power transmissions
2. Linear and rotary actuators
3. Propulsion systems
4. Steering systems
5. Braking
6. Control systems
7. Shock absorbers
8. Catapults
9. Arresting gear
10. Gun drive mechanisms.

All of these applications have the general fluid requirements of lubrication, compatibility, good filterability, good water and air separation, and corrosion protection. These general requirements are not discussed in the subsequent paragraphs.

6-3.1.1 Power Transmission—Fluid Coupling

A fluid coupling is a device that replaces the mechanical link between a prime mover and an output mechanism (commonly a gearbox) with a fluid link. The fluid link normally consists of a hydraulic pump that is driven by the prime mover and a hydraulic motor that drives the output mechanism. (Pumps and motors are discussed in Chapter 2.) The pump and motor are usually arranged as a closed loop system termed a hydrostatic transmission (HST). A closed loop system is one in which the fluid, instead of returning from the hydraulic motor to a reservoir, returns directly from the hydraulic motor outlet to the pump inlet.

The properties of a hydraulic fluid that are significant in its use in fluid couplings are

1. *Bulk Modulus.* A high bulk modulus is desirable in fluid couplings to ensure a stiff power transmission medium. This is especially important if the system is servo operated or subject to rapid reversals of direction or erratic loading.

2. *Temperature Range.* Because there is no reservoir to aid in cooling the fluid in a closed loop system, the fluid tends to operate at higher temperatures than in open loop systems. Heat exchangers are often required to maintain the fluid temperature at an acceptable level. This high-temperature operation requires a fluid with good thermal and oxidation stabilities.

3. *Viscosity.* A high viscosity index is desirable because of the wide temperature range through which these fluids must perform.

6-3.1.2 Actuation—Linear and Rotary

Linear actuators are those devices that convert fluid energy into a linear mechanical output, whereas a rotary actuator converts fluid energy into a rotary output. Linear and rotary actuators are commonly referred to as cylinders and hydraulic motors, respectively. Actuators are discussed extensively in pars. 2-4.1 and 2-4.2.

The fluid requirements for these devices tend to be defined by the conditions under which the devices are applied rather than by the applications themselves. For example, a hydraulic cylinder used in a high-temperature application would require a fluid with good high-temperature characteristics; however, this requirement stems from the high-temperature conditions and not from its use in a cylinder. Likewise, an actuator used in a servo system or in any system in which there are high-frequency input commands or rapid fluctuations of the load would require a fluid with a high bulk modulus.

6-3.1.3 Propulsion

Fluid power is used in many propulsion applications. In marine applications propeller pitch controls and, in smaller vessels, propeller drives are often hydraulically operated. The pitch of aircraft propellers and helicopter rotor blades is usually controlled by fluid power. In jet engines hydraulically activated thrust reversers and thrust vector nozzles are widely used. Hydrostatic transmissions are common in ground vehicles.

Pertinent characteristics for fluids for these applications are

1. *Bulk Modulus.* A high bulk modulus is required in these applications to provide good fluid stiffness and rapid response to high-frequency input commands and load fluctuations.

2. *Shear Stability.* Operating pressures at or above 30,000 kPa (4300 psi) require good shear stability.

3. *Temperature Range.* Most of these applications require closed loop systems; therefore, good thermal stability and good high-temperature performance are required.

4. *Viscosity Index.* Because these systems are on equipment that may be started in very low environmental temperatures and then operate at high fluid temperatures, a high viscosity index is desired.

Downloaded from http://www.everyspec.com

5. *Hydrolytic Stability*. Fluids used in marine applications have a greater than normal potential for water contamination. Therefore, fluids for these applications require a high hydrolytic stability.

6-3.1.4 Steering

The term "steering" generally invokes ground vehicles, but hydraulic steering systems are also used in marine and aircraft applications.

The unique fluid requirements for these applications are

1. *Bulk Modulus*. A high bulk modulus is required to provide good system stiffness and good system response. This is especially true in aircraft flight control systems, which are usually servo operated.

2. *Hydrolytic Stability*. Good hydrolytic stability is required for marine applications.

3. *Temperature Range*. Some steering system components on ground vehicles are located in the engine compartment of the vehicle. Therefore, fluids for these applications require good thermal stability, good oxidation resistance, and good high-temperature characteristics.

4. *Viscosity Index*. Because these systems may be started at low fluid temperatures and operated at high fluid temperatures, a high viscosity index is required.

6-3.1.5 Braking

Braking systems arrest the motion of a vehicle by converting the kinetic energy of the vehicle to heat energy, generally through friction between rotating and nonrotating brake segments. In ground vehicles the brake system is usually self-contained and separate from other hydraulic systems. Conversely, aircraft braking systems usually are a part of the aircraft hydraulic system and share the same fluid with all of the other hydraulic devices.

Special fluid requirements for braking systems are

1. *Temperature Range*. Because these fluids are subjected to very high temperatures, they must have good thermal stability, good oxidation resistance, and good high-temperature performance characteristics.

2. *Corrosion Protection*. The fluid formulation should protect from corrosion the hot materials with which they come in contact.

3. *Hydrolytic Stability*. Brake systems are frequently subjected to water contamination; therefore, good hydrolytic stability is required.

6-3.1.6 Control and Control Systems

Hydraulic control systems are similar to other types of hydraulic systems in that they commonly use pressurized fluid to operate actuators—typically hydraulic cylinders. Their primary departures from other systems are the stiffness and frequency response required, particularly in aerospace applications.

The unique fluid requirements for these applications are

1. *Bulk Modulus*. In high-performance combat aircraft the requirement for a stable platform for weapons control and ordnance delivery requires that the flight control surfaces be held rigidly in place with no flutter and that any aerodynamic disturbances be immediately and accurately damped. The high maneuverability requirements demand that the control surfaces respond immediately and accurately to command inputs. These conditions require that the fluid have a high bulk modulus.

2. *Temperature Range*. The control systems for aerospace vehicles may be exposed to a wide range of environmental and operating temperatures; therefore, the fluid must be operable through a wide range of temperatures.

3. *Viscosity Index*. A high viscosity index is required because the fluid is exposed to a wide range of temperatures.

4. *Thermal and Oxidation Stabilities*. In some aerospace control applications the hydraulic system components are located where very high environmental temperatures are experienced. This situation requires high thermal and oxidation stabilities.

6-3.1.7 Shock Absorbers

The general term "shock absorbers" can refer to numerous cushioning devices. The most common of these devices are the shock absorbers used in automotive suspension systems, recoil mechanisms for large guns, and aircraft landing gear shock struts. Shock absorbers are discussed in par. 2-12, which includes figures to illustrate the mechanisms.

The properties of a hydraulic fluid that are most pertinent to its use in shock absorbers are

1. *Bulk Modulus*. If the shock absorber is to be fully regenerative, the hydraulic fluid should have a high bulk modulus so that a minimum amount of energy is stored in the fluid in order to produce a springback of the shock absorber. A liquid spring stores all of its energy in the working liquid and would therefore require a low bulk modulus.

2. *Density*. The density of the working liquid is a major factor in the rate at which the liquid will pass through an orifice, e.g., lower density gives a higher flow rate and a faster stroke. A higher density fluid, on the other hand, can be used for a shorter stroke but causes higher working pressures than lower density fluids.

3. *Shear Stability*. Fluids in shock absorbers experience high shear rates; therefore, they should have a high shear stability.

4. *Viscosity Index*. Rapid operation of a shock absorber can generate a significant amount of heat; thus a high viscosity index is required.

6-3.1.8 Catapults

Catapults are used on aircraft carriers to assist in accelerating aircraft to flying speed over the very short takeoff dis-

Downloaded from http://www.everyspec.com

tance available on the carrier deck. The launch mechanism is retracted by a cable and drum device (essentially a winch) driven by a hydraulic motor.

The special requirements for hydraulic fluids used in catapult systems are

1. *Hydrolytic Stability.* Good hydrolytic stability is required because of the potential for water contamination.

2. *Rust and Oxidation.* The potential for water contamination coupled with the salt atmosphere make good rust and oxidation protection essential.

3. *Low-Temperature Performance.* Aircraft carriers may be required to operate in very low-temperature conditions. Therefore, the fluid must have good low-temperature properties.

4. *Viscosity Index.* The requirement for low-temperature operation requires a high viscosity index to prevent an unacceptably high viscosity at low operating temperatures.

5. *Chemical Stability.* The possibility of contamination by salt requires good chemical stability.

6-3.1.9 Arresting Gear

Arresting gear is used to decelerate aircraft both on aircraft carriers and land. The units on aircraft carriers usually use a linear cylinder with a series of pistons that close off flow orifices as the cylinder is extended by the pull of the aircraft on the attached cable. This is termed a "diminishing orifice" system and is in reality a rather sophisticated shock absorber.

Arresting gear on land normally employs large, liquid-filled drums containing counterrotating variable turbines. As the arresting cable extends, the turbines spin in the liquid. The pitch of the turbine blades increases as the speed increases. Thus the maximum resistance occurs at maximum aircraft speed, which is usually at the initial barrier engagement.

The important characteristics for fluids used in arresting gear are

1. *Hydrolytic Stability.* Exposure to the environment presents the possibility of water contamination; therefore, good hydrolytic stability is required.

2. *Shear Stability.* The design of the mechanisms subjects the fluid to high shear. Thus good shear stability is required.

3. *Thermal Stability.* Because the mechanisms dissipate the kinetic energy of the aircraft as heat, good thermal stability is required.

4. *Oxidation Stability.* The heat generated by the operation of the arresting gear requires the fluid to have good thermal stability.

5. *Low-Temperature Performance.* The systems must perform properly, even when exposed to low ambient temperatures. Good low-temperature performance is required of the fluid.

6. *Rust and Oxidation Resistances.* These devices (especially land systems) may be inactive for long periods of time. Rust and oxidation resistances are required to protect the system hardware during these periods.

7. *Density.* High-density fluids are normally used to reduce the flow rate through control orifices.

6-3.1.10 Gun Drive Mechanisms

Some large caliber, rapid-firing gun drive mechanisms are hydraulically operated. These mechanisms rotate the multiple-barrel assembly and drive the ammunition feed. Fluids used in this application require the following qualities:

1. *Thermal Stability.* Good thermal stability is required because of the high heat to which the fluid is exposed.

2. *Oxidation Stability.* The heat exposure also makes good oxidation stability necessary.

3. *Temperature Range.* The fluid must perform well over a wide temperature range.

6-3.2 IMPORTANT PROPERTIES OF FLUID BASED ON APPLICATION

The complex and varied nature of hydraulic systems can often require conflicting properties of hydraulic fluids. An obvious example of this is the need for a low-viscosity fluid for low-temperature applications and a high-viscosity fluid for high-temperature applications for the same system. Compromises must be achieved and will often vary on a case-by-case basis. Table 6-8 is presented to aid the designer in making these system-based decisions.

Table 6-8 provides a summary of various fluid properties and the effects water-base and synthetic fluids have on some aspects of a system (Ref. 17). The reader should be cautioned that system changes may be needed if fluids are changed. Table 6-9 compiles fluid properties and characteristics presented throughout this chapter, relates them to their resulting primary influence, and directs the reader to any appropriate applications that require the characteristics listed.

6-3.3 COMPATIBILITY WITH SYSTEM COMPONENTS

The major aspect of hydraulic fluid compatibility and system materials is ensuring that interactions with the metallic and elastomeric compounds of the system are minimized. Pars. 6-2.1 and 6-2.2 present specific compatibility requirements. Even so, the designer is cautioned against specifying system materials that do not exhibit proper compatibility with each and every material. Subtle issues, such as compatibility with cleaning agents, are extremely important, e.g., the now commonly understood reaction of trace amounts of halogenated solvent cleaner with trace amounts of water (Refs. 18, 19, and 20). The oxygen content of water reacts with this common cleaning agent and promotes rust within servovalves or other system components.

TABLE 6-8. VARIOUS FLUID PROPERTY EFFECTS (Ref. 17)

FLUID PROPERTY	EFFECT OF THE FLUID PROPERTY ON																							
	High-Temperature Application			Low-Temperature Application			Pump Design			Plumbing Design			Valves and Cylinder Design			Filter Design			Reservoir Design			Seals and Hose Design		
	E	M	N	E	M	N	E	M	N	E	M	N	E	M	N	E	M	N	E	M	N	E	M	N
Water-Base Fluids																								
Corrosivity			•			•		•			•			•		•				•		•		
Lubricity			•		•		•				•		•					•			•		•	
Thermal Conductivity	•				•			•				•			•			•		•				•
Specific Gravity			•			•	•			•				•		•				•				•
Viscosity		•		•			•			•			•			•					•		•	
Vapor Pressure	•					•	•			•				•			•		•					•
Synthetic Fluids																								
Corrosivity			•			•			•		•			•		•				•		•		
Lubricity			•			•		•			•			•		•					•		•	
Thermal Conductivity		•				•			•			•			•			•			•			•
Specific Gravity			•			•	•			•				•		•				•				•
Viscosity			•			•		•				•		•			•				•			•
Vapor Pressure			•			•			•			•			•			•			•			•

E = Has extreme effect
M = Has moderate effect
N = Has no effect

Reprinted with permission. Copyright © by Oklahoma State University, School of Mechanical and Aerospace Engineering.

Downloaded from http://www.everyspec.com

TABLE 6-9. FLUID PROPERTIES AND CHARACTERISTICS AND THEIR PRIMARY SYSTEM INFLUENCE

FLUID PROPERTY OR CHARACTERISTIC	PRIMARY INFLUENCE	CRITICAL APPLICATIONS AND APPLICABLE PARAGRAPH NUMBERS
Bulk Modulus	System stiffness	Power transmission, propulsion, control systems, 6-3.1.1, 6-3.1.3, 6-3.1.6
Viscosity	Power losses, orifice flow	Actuation, propulsion, control systems, especially 6-3.1.7
Density	System weight, orifice flow	Actuation, propulsion, control systems, aerospace, 6-3.1.7
Specific Heat	Thermal characteristics	High temperature, especially 6-3.1.5
Thermal Conductivity	Heat exchanger design	All aerospace, some mobile equipment, 6-3.1.2, 6-3.1.6, 6-3.1.7
Thermal Expansion	Reservoir sizing	All aerospace, some mobile equipment, 6-3.1.2, 6-3.1.6, 6-3.1.7
Viscosity Index	Viscosity change	All environmentally exposed applications, 6-3.1.2 to 6-3.1.10
Neutralization Number	Acidity measure	Actuation, propulsion, control systems, especially high temperature and vented, 6-3.1.1 to 6-3.1.10
Lubricity	Component wear	Actuation, propulsion, control systems, high pressure, 6-3.1.1, 6-3.1.3
Compatibility	System materials	Actuation, propulsion, control systems, 6-3.1.2, 6-3.1.3
Volatility	Cavitation and evaporation	Actuation, propulsion, control systems, especially vented systems, 6-3.1.2, 6-3.1.3, 6-3.1.6
Toxicity	Safety	All applications
Foaming	Cavitation and evaporation	Actuation, propulsion, control systems, especially vented systems
Fire Resistance	Safety	All applications, 6-3.1.1 to 6-3.1.10
Pour Point	Fluid flow	All environmentally exposed, 6-3.1.1 to 6-3.1.10
Freezing Point	Operational limit	All environmentally exposed, 6-3.1.1 to 6-3.1.10
Boiling Point	Operational limit	All high temperature, especially 6-3.1.1
Flash Point	Operational limit	Actuation, propulsion, control systems, 6-3.1.2, 6-3.1.3, 6-3.1.6
Storage Stability	Storage limit	Actuation, propulsion, control systems, 6-3.1.5
Chemical Stability	Formation of breakdown products/corrosion	All high temperature, especially braking, 6-3.1.4
Thermal Stability	Deterioration of fluid properties	All high temperature, especially HST and braking, 6-3.1.1 to 6-3.1.10
Mechanical (Shear) Stability	Loss of lubricity and viscosity	All high pressure as well as shock absorbers and recoil mechanisms, 6-3.1.1 to 6-3.1.10
Contamination Stability	Degradation	Actuation, propulsion, control systems, especially servo systems, 6-3.1.2, 6-3.1.3, 6-3.1.6

Downloaded from http://www.everyspec.com

Downloaded from http://www.everyspec.com

6-3.4 TEMPERATURE RANGES

A distinguishing property of the various hydraulic fluids is operating temperature range. This is the range of temperature in which the fluid may operate without significant change in viscosity, lubricity, or density and without separation of ingredients. Table 6-10 lists some common hydraulic fluids with their designated military specification operating temperature ranges. (Also see Chapter 4.)

TABLE 6-10. OPERATING TEMPERATURE RANGES FOR MILITARY SPECIFICATION FLUIDS (SOURCE: MIL-SPECS)

FLUID	°C	°F
Petroleum-Base Liquids		
MIL-F-17111B(OS)	-34 to 4	-29 to 39
MIL-H-17672D	NR	
MIL-H-27601A(USAF)	-40 to 285	-40 to 550
MIL-H-46001D	NR	
MIL-H-5606F	-54 to 135	-65 to 275
MIL-H-6083E	-54 to 135	-65 to 275
MIL-H-81019D	-70 to 100	-94 to 212
MIL-L-17331H(SH)	NR	
MIL-L-2104F	NR	
MIL-L-46167B	-55 to 5	-67 to 41
Synthetic Hydrocarbons		
MIL-H-46170B	-40 to 135	-40 to 275
MIL-H-83282C	-40 to 205	-40 to 401
MIL-H-87257	-54 to 135	-65 to 275
Glycol/Water Glycol		
MIL-H-22072C	NR	
MIL-H-5559A(AS)	NR	
SAE J 1703	NR	
Silicone		
MIL-B-46176A	-55 to 205	-67 to 401
Polyphenyl Ether		
MIL-L-87100(USAF)	15 to 300	59 to 572
Polysiloxane		
MIL-S-81087C	-75 to 220	-103 to 428
VV-D-1078B	NR	
Phosphate Ester		
MIL-H-19457D(SH)	NR	
Chlorotrifluoroethylene Polymer		
MIL-H-53119	-54 to 175	-65 to 350

NR = Not Reported

6-3.4.1 Environmental

The environment in which the hydraulic system is used can cause some significant temperature effects. Any environmentally unprotected system, e.g., virtually all marine, mobile, and aerospace applications, is subject to climatic temperature swings. Temperatures below the pour point of the fluid can render the fluid unpumpable, damage pumps due to cavitation, and create unacceptably high pressures. High environmental temperatures can raise the fluid temperature to near the recommended limits. This is especially critical for the water-containing, fire-resistant fluids because of the effects of water evaporation. If the fluid temperature is elevated initially, inefficiencies in system operation can easily cause the fluid to exceed the operating limit and result in viscosity loss, thermal degradation, and accelerated oxidation rates. High environmental temperatures also degrade the effectiveness of air-oil heat exchangers. This result occurs because the heat transfer rate is a function of the temperature difference ΔT between the cooling air and the oil. (Coolers are discussed in par. 2-10.)

Critical high-temperature effects may also occur when the system is located near a major heat source. An industrial example is the system that operates the pouring ladle of a blast furnace. Its proximity to the furnace places the system in a very hostile temperature environment. In mobile equipment applications systems located within the engine enclosure may be subjected to unfavorable temperature conditions. Engine-driven pumps and associated plumbing mounted on gas turbine engines, especially those embedded in the aircraft fuselage, may experience unacceptably high temperatures. In all of these applications the environmental effects can be minimized by providing thermal shielding or cooling airflow.

6-3.4.2 Hydraulic System

A hydraulic pump converts mechanical energy from a prime mover into energy in the hydraulic fluid. Anyplace in the system where there is a pressure loss without the accomplishment of mechanical work, the fluid energy is dissipated as heat. These pressure losses represent inefficiencies in the design and operation of the system or in individual components.

The primary sources of heat generation are the fluid conduits, flow control devices, certain pressure control valves, and any type of internal leakage. In fluid conduits (hoses, pipes, and tubing), pressure losses result from friction between the internal surface and the fluid, changes of direction (bends, elbows, etc.), and changes in cross section. As discussed in par. 2-11.3, these losses and the consequent heat generation are directly related to the fluid velocity in the conduit. The losses are minimized by proper line sizing and a system layout that requires as few changes of direction as possible. Where direction changes are necessary, the larger the turn radius, the lower the pressure drop will be.

Downloaded from http://www.everyspec.com

This indicates that bends rather than elbows should be used whenever practical.

Any restrictor-type flow control device can represent a major pressure drop in the system. Likewise, pressure-reducing valves, counterbalance and brake valves, as well as undersized directional control devices represent significant pressure drops. Relief valves often are the most significant pressure drop in any system using a fixed-displacement pump.

The heat generated as a result of these pressure losses is found from

$$HGR = \Delta p Q, \text{ W} \qquad (6\text{-}1)$$

where

HGR = heat generation rate, W
Δp = pressure drop, N/m^2
Q = flow rate, m^3/s.

In the British system

$$HGR = 1.48\ \Delta p Q, \text{ Btu/h} \qquad (6\text{-}2)$$

where

HGR = heat generation rate, Btu/h
Δp = pressure drop, lb/in.^{2}
Q = flow rate, gal/min.

The temperature rise ΔT due to a pressure drop is calculated from

$$\Delta T = \frac{HGR}{C_p M}, \text{ K (R)} \qquad (6\text{-}3)$$

where

HGR = heat generation rate, W (Btu/h),
C_p = specific heat, J/(kg·K) (Btu/(lbm·R))
M = mass flow rate, kg/s (lbm/h).

All equations presented in this paragraph apply to any pressure loss, regardless of the source, that does not produce mechanical work.

Fluid power systems should be designed to minimize long-term pressure drop situations. If this is not possible, a fluid formulated for high-temperature operation may be required.

6-3.5 HYDRAULIC FLUID SUBSTITUTION ALTERNATIVES

Battlefield conditions often require the use of unconventional solutions to logistical problems. The potential for use of an alternative fluid in vehicles offers opportunities to achieve mobility, even if performance is degraded. The paragraphs that follow present possible options for hydraulic fluids and means to overcome common hydraulic system failures, which result in loss of fluid. The reader is cautioned that the following alterations and repairs are for emergency situations only and could possibly damage the hydraulic system. Thus the information is presented as a reference and a guide only.

6-3.5.1 Application Options

Use of any fluid other than that specified for an application is not unconditionally recommended, even in emergency situations. The existence of hazardous handling conditions, flammability, or extreme high system temperature operation could render a "quick fix" less advantageous than abandonment of the vehicle. However, a complement of fluids often exists that can be satisfactorily used for emergency, short-term application. The advent of enhanced survivability techniques by the use of battlefield damage assessment and repair (BDAR) methods has justified this.

The M110A2 self-propelled howitzer has had a hydraulic fluid substitution alternative assessed (Ref. 21). Table 6-11 presents the fluid alternatives defined as possibilities for the M110. This type of table can be generated quite readily from experience or from the data presented in par. 4-6. Use of substitute fluids requires extreme caution and should be limited to emergency situations.

6-3.5.2 Battlefield Damage and Repair Options

The need for hydraulic fluid substitution alternatives is obviously due to the fact that the hydraulic system is low on oil or has lost all of its oil. Hydraulic hose and tube failures often account for this loss of fluid and without correction of the situation would render any use of an alternate fluid useless. Thus many techniques for hose and tube repair have been developed (Ref. 21).

6-4 SELECTION CHECKLIST

In the process of determining the type and characteristics of a fluid required for a particular application, a relatively small number of questions must be considered. The answers to these questions may not lead to the specific fluid to be used, but they will provide a list of fluid properties and characteristics required to achieve the expected performance and reliability from the components and the fluid.

When these fluid parameters have been identified, relevant specifications can be reviewed to determine whether a suitable fluid exists in the military inventory or whether one is commercially available. If a suitable fluid is not available, either system requirements must be relaxed or a new fluid must be developed.

The system conditions and the fluid and system considerations to be considered are shown in Table 6-12. Note that the system conditions are questions posed from a fluid specification standpoint. To aid the reader further, Table 6-13 is included as a quick reference for hydraulic fluid selection. Selection of the best fluid for a specific application must be

Downloaded from http://www.everyspec.com

TABLE 6-11. HYDRAULIC FLUID SUBSTITUTION FOR M110A2 (Ref. 21)

PREFERENCE RANK	ALTERNATIVE FLUID	SEAL COMPATIBILITY	VISCOSITY RELATIVE TO BASIC FLUID
Basic Fluid	MIL-H-6083E	Compatible	Same
1	MIL-H-83282C	Compatible	Same
2	DEXTRON® II	Compatible	Same
3	MIL-L-46167B	Compatible	Same
4	MIL-H-46170B	Compatible	Same
5	MIL-H-5606E	Compatible	Same
6	MIL-L-2104E (OE/HDO-30)	Compatible	Higher
7	MIL-L-2104E (OE/HDO-10)	Compatible	Higher
8	SAE 10 Motor Oil	Compatible	Higher
9	MIL-L-23699C (Turbine oil)	Moderate	Same
10	MIL-L-7808J	Moderate	Same
11	MIL-A-46153 Antifreeze, ethylene glycol	Compatible	Lower
12	Ethylene glycol and water, 50-50 mix	Compatible	Lower
13	Water	Compatible	Lower
14	Diesel fuel	Compatible	Lower

guided by the requirements of the application; thus no single fluid is the best choice for all applications. A comparison of synthetic fluid properties compiled from a broad spectrum of technical sources is shown in Table 6-14.

6-5 SELECTION EXAMPLE

As a simple example, consider a small backhoe that operates with a relief valve setting of 13,790 kPa (2000 psi). The fixed-displacement gear pump is mounted on a power take-off (PTO) unit. The backhoe is left parked at the job site, sometimes for extended periods. When operating, the pump flow dumps over the relief valve, except while the bucket is moving, and generates considerable heat.

When the checklist from Table 6-12 is used, Questions 1, 3, 5, 8 (pump pressure plate), 10, and 11 are answered affirmatively. Therefore, the fluid must have the following characteristics:

1. Appropriate viscosity (set by pump manufacturer)
2. High viscosity index
3. Good low-temperature characteristics (pour point, cloud point, etc.)
4. Good hydrolytic stability
5. Wide temperature range
6. Rust and oxidation (R&O) inhibitors
7. Compatibility with copper
8. Good lubricity
9. Antiwear additive
10. Good shear stability
11. Good thermal stability
12. High heat capacity.

Downloaded from http://www.everyspec.com

TABLE 6-12. FLUID SELECTION QUESTIONS

SYSTEM CONDITION	FLUID AND SYSTEM CONSIDERATIONS
1. Is the system exposed to climatic changes?	Viscosity, viscosity index, pour point, cloud point, hydrolytic stability, temperature range
2. Is the pump or any part of the system engine mounted, in the engine compartment, or near any major heat source?	Viscosity, viscosity index, thermal stability, heat capacity, fire resistance
3. Is the system exposed to high humidity, rain, marine environment, or water wash down?	Rust and oxidation (R&O) inhibitors, hydrolytic stability, sealed reservoir, desiccant breather
4. Is the system exposed to chemicals or chemical vapors?	Sealed reservoir
5. Is the system exposed to dirty or dusty conditions?	Sealed reservoir, high-efficiency filters
6. Is high system stiffness required (high-frequency inputs, servo systems, flight controls, etc.)?	Bulk modulus, rapid air release
7. Is the fluid used in a shock absorber or recoil mechanism?	Viscosity, density
8. Does the system contain any zinc, cadmium, aluminum, or copper alloys?	Fluid compatiblilty
9. Is a fire-resistant or nonflammable fluid required in the system?	Fire resistance properties, metal and seal compatibility, viscosity, antiwear and lubricity, temperature range, water content monitoring
10. Does the system operate at high pressures?	Viscosity, antiwear and lubricity, shear stability, thermal stability
11. Does pump flow dump over the relief valve or undergo significant pressure drops without doing mechanical work?	Viscosity, viscosity index, shear stability, thermal stability
12. Is component contaminant sensitivity a concern?	Ultraclean fluid, filters, purifiers, etc.

Downloaded from http://www.everyspec.com

TABLE 6-13. QUICK REFERENCE FOR SELECTION OF A HYDRAULIC FLUID

HYDRAULIC FLUID	OPERATING TEMPERATURE RANGE, °C(°F)	FLASH POINT °C(°F)	RUST INHIBITED	COMPATIBLE ELASTOMERS	BASE STOCK MATERIAL
MIL-F-17111B(OS)	–35 to 4 (–29 to 39)	104(219)	Yes		Petroleum
MIL-H-17672D	NR	157 to 171 (315 to 340)	Yes		Petroleum
MIL-H-27601A (USAF)	–40 to 285 (–40 to 550)	182.2(360)	No	See Table 6-5 for all fluids.	Petroleum
MIL-H-46001D	NR	188 to 221* (370 to 429)	Yes		Petroleum
MIL-H-5606F	–54 to 135 (–65 to 275)	82(180)	Yes		Petroleum
MIL-H-6083E	–54 to 135 (–65 to 275)	82(180)			Petroleum
MIL-H-81019D	–70 to 100 (–94 to 212)	95(203)	Yes		Petroleum
MIL-L-17331(SH)	NR	204(400)	Yes		Petroleum
MIL-L-2104F	NR	205(401)*	Yes		Petroleum
MIL-L-46167B	NR	220(428)	Yes		Petroleum
MIL-H-46170B	–40 to 135 (–40 to 275)	204 to 218* (400 to 424)	Yes		Synthetic hydrocarbon
MIL-H-83282C	–40 to 205 (–40 to 401)	205(401)	No		Synthetic hydrocarbon

*Multigrades of this oil exist. See the fluid specification or par. 4-6 for more information.

(cont'd on next page)

Downloaded from http://www.everyspec.com

TABLE 6-13 (cont'd)

HYDRAULIC FLUID	OPERATING TEMPERATURE RANGE, °C(°F)	FLASH POINT °C(°F)	RUST INHIBITED	COMPATIBLE ELASTOMERS	BASE STOCK MATERIAL
MIL-H-87257	–54 to 135 (–65 to 275)	160(320)	No		Synthetic hydrocarbon
MIL-H-22072C(AS)	NR	NR	Yes		Water glycol
MIL-H-5559A(AS)	NR	NR	No		Water glycol
SAE J1703	NR	NR	Yes		Water glycol
MIL-B-46176A	–55 to 205 (–67 to 401)	204(400)	Yes	See Table 6-5 for all fluids.	Silicone
MIL-L-87100(USAF)	15 to 300 (59 to 572)	275(527)	No		Polyphenyl ether
MIL-S-81087C	–75 to 220 (–103 to 428)	290(554)	Yes		Polysiloxane
VV-D-1078B	NR	See Table 4-24A.	Yes		Polysiloxane
MIL-H-19457D(SH)	NR	NR	Yes		Phosphate ester
MIL-H-53119	–54 to 175 (–65 to 350)	NR	Yes		Chlorotrifluoro-ethylene polymer

TABLE 6-14. COMPARISON OF SYNTHETIC FLUIDS (Ref. 22)

Evaluation 1 – Excellent 2 – Very Good 3 – Good 4 – Moderate 5 – Poor	Mineral Oils	Polyisobutenes	Polyalphaolefins	Alkylated Aromatics	Polyalkyleneglycols	Perfluoroalkylethers	Polyphenylethers	Dicarboxylic Acid Esters	Neophentyl Polyesters	Triaryl Phosphate Esters	Trialkyl Phosphate Esters	Silicone Oils	Silicate Esters	Silahydrocarbons	Chlorofluorocarbons	Cyclophosphazene Fluids	Dialkylcarbonates	Alkylated Cyclopentanes	PAMA/PAO-Cooligomeres	Rape Seed Oils
Viscosity Temperature Behavior (VI)	4	5	2	4	2	4	5	2	2	5	1	1	1	2	4	5	3	3	2	2
Low-Temperature Behavior (Pour Point)	5	4	1	3	3	3	5	1	2	4	1	1	2	3	3	3	3	3	2	3
Liquid Range	4	5	2	3	3	1	5	2	2	2	3	1	1	2	5	4/5	2	1	2	3
Oxidation Stability	4	4	2	4	3	1	2	2/3	2	2	4	2	2	3	1	3	2	2	2	5
Thermal Stability	4	4	4	4	3	1	1	3	2	2	3	2	3	2	2	3/4	3	4	3	4
Evaporation Loss, (Volatility)	4	4	2	3	3	1	3	1	1	2	2	2	3	2	3	3	4	1	1	3
Fire Resistance, Flash Temperature	5	5	5	5	4	1	4	4	4	1/2	1/2	3	4	4	1	1/2	3	5	4/5	5
Hydrolytic Stability	1	1	1	1	3	1	1	4	4	4	3	3	4	1	2	3	3	1	2	5
Corrosion Protection Properties	1	1	1	1	3	5	4	4	4	4	4	3	5	1	5	3	1	1	2	1
Seal Material Compatibility	3	3	2	3	3	1	3	4	4	5	5	3	3	2	4	3/4	3	2	1	4
Paint and Lacquer Compatibility	1	1	1	1	4	2	4	4	4	5	5	3	4	1	3	3/4	2	1	1	4
Miscibility With Mineral Oil	–	1	1	1	5	5	3	2	2	4	4	5	4	1	5	5	2	1	1	1
Solubility of Additives	1	1	2	1	4	5	2	2	2	1	1	5	3	3	5	4	2	3	1	3
Lubricating Properties, Load-Carrying Capacity	3	3	3	3	2	1	1	2	2	1	3	5	4	3	1	2/3	2	3	2	1
Toxicity	3	1	1	5	3	1	3	3	3	4/5	4/5	1	4	2	2	2	1	1	1	1
Biodegradability	4	5	5	5	1/2	5	5	1/2	1/2	2	2	5	4	5	5	–	1	5	4/5	1
Price Relation Against Mineral Oil*	–	3–5	3–5	3–5	6–10	500	200–500	4–10	4–10	5–10	5–10	30–100	20–30	30–70	300–400	30–50	4–10	3–8	5–10	2–3

*This line is read "Polyalphaolefins cost 3 to 5 times more than mineral oil.", for example.

Reprinted by permission of the Society of Tribologists and Lubrication Engineers.
All rights reserved.

Downloaded from http://www.everyspec.com

Downloaded from http://www.everyspec.com

REFERENCES

1. Federal Test Method No. 353.1, "Evaporation", Federal Test Method Standard No. 791C, *Methods of Testing Lubricants, Liquid Fuels, and Related Products*, 30 September 1986.
2. Hubert H. Uhlig, *Corrosion and Corrosion Control—An Introduction to Corrosion Science and Engineering*, 2nd Ed., John Wiley and Sons, Inc., New York, NY, 1985.
3. D. Godfrey and N. W. Furby, "Cavitation of Oils and Hydraulic Fluids", *Proceedings of the AFML Hydraulic Fluids Conference*, AFML-TR-67-369, Air Force Materials Laboratory, Wright-Patterson Air Force Base, OH, December 1967.
4. F. Don Norvelle, *An Introduction to Fluid Power*, West Publishing Company, St. Paul, MN, 1991.
5. *O-Ring Handbook*, ORD-5700, Parker Hannifin Corporation, O-Ring Division, Lexington, KY, 1991.
6. Robert O. Bolt, "Radiation Effects on Lubricants", *Handbook of Lubrication*, Chemical Rubber Company, Cleveland, OH, 1984, pp. 209-23.
7. C. D. Bopp and O. Sismann, "Radiation Stability of Plastics and Elastomers", Nucleonics **13**, No. 7 (July 1955).
8. C. D. Bopp and O. Sismann, "A Summary of the Effect of Radiation on Some Plastics and Elastomers", ASTM Special Technical Publication No. 208, American Society for Testing and Materials, Philadelphia, PA, 1957.
9. MIL-HDBK-149B, *Rubber*, February 1984.
10. *1990 Annual Book of ASTM Standards, Section 9*, American Society for Testing and Materials, Philadelphia, PA, 1990.
11. ASTM D 471-79, *Standard Test Method for Rubber Property—Effect of Liquids*, American Society for Testing and Materials, Philadelphia, PA, 1979.
12. Federal Test Method No. 3603.5, "Swelling of Synthetic Rubbers", Federal Test Method Standard No. 791C, *Methods of Testing Lubricants, Liquid Fuels, and Related Products*, 30 September 1986.
13. Federal Test Method No. 3604.2, "Swelling of Synthetic Rubber by Aircraft", Federal Test Method Standard No. 791C, *Methods of Testing Lubricants, Liquid Fuels, and Related Products*, 30 September 1986.
14. MIL-C-53072A(ME), *Chemical-Agent-Resistant Coating (CARC) System Application Procedures and Quality Control Inspection*, 15 March 1988.
15. Federal Test Method No. 3403.2, "Compatibility of Turbine-Lubricating Oils", Federal Test Method Standard No. 791C, *Methods of Testing Lubricants, Liquid Fuels, and Related Products*, 30 September 1986.
16. ASTM D 2510-83, *Standard Test Method for Adhesion of Solid Film Lubricants*, American Society for Testing and Materials, Philadelphia, PA, 1983.
17. S. C. Cuthbutson and J. S. Staki, "The Effects of Changeover to FRF Hydraulic Performance—Part 1: Fluid/Component Criteria", *The FRH Journal*, 1-2, 153-7 (1981).
18. John G. Eleftherakis, "Infrared Analysis: Part 2—Identification of Corrosion Products in Hydraulic Fluids", The FRH Journal **6** (1986).
19. L. C. Lipp, "Halogenated Solvent-Induced Corrosion in Hydraulic Systems", Lubrication Engineering **35**, 72-9 (12 February 1979).
20. R. J. Cappell, "Failure from Corrosion of Corrosion Actuators", *Material Protection*, 30-5 (December 1962).
21. John G. Eleftherakis, *Hydraulic System Analysis of the M110A2 Eight-Inch Self-Propelled Howitzer for Use in Battlefield Damage Assessment and Repair (BDAR) Manuals*, Report No. 86-AF-2, US Army Systems Analysis Activity, The Fluid Power Research Center, Oklahoma State University, Stillwater, OK, 1986.
22. Wilfried J. Bartz, "Comparison of Synthetic Fluids", paper presented at the annual meeting of the Society of Tribologists and Lubrication Engineers, Philadelphia, PA, 1992, Society of Tribologists and Lubrication Engineers, Park Ridge, IL.

BIBLIOGRAPHY

J. E. Anders, *Industrial Hydraulics Troubleshooting*, McGraw-Hill Book Company, New York, NY, 1983.

J. G. Ashby, and M. J. Pinches, *Power Hydraulics*, Prentice-Hall International (UK) Ltd, Hemel Hempstead, Hertfordshire, England, 1989.

R. M. Austin, *The Seal Users Handbook*, 2nd Ed., British Hydraulics Research Association, Fluid Engineering, Cranfield, England, 1979.

Beta Industries, Inc., *Definition of Design Criteria for Energy Absorption Systems*, Report No. NADC-AC-7010, Naval Air Development Center, Warminster, PA, June 1970.

E. F. Brater, and H. W. King, *Handbook of Hydraulics*, McGraw-Hill Book Company, New York, NY, 1982.

F. C. Brink, Jr., "Fire-Resistant Hydraulic Fluids", Lubrication **58**, Texaco, Inc., New York, NY (October-December 1972).

H. H. Buchter, *Industrial Sealing Technology*, John Wiley & Sons, Inc., New York, NY, 1979.

L. P. Domzalski, *Dynamic Performance of a Variable-Load Energy Absorber*, Report No. NADC-80257-60, Naval Air Development Center, Warminster, PA, February 1982.

H. Dorr *et al.*, *The Hydraulic Trainer, Volume 2—Proportional and Servo Valve Technology*, Mannesmann Rexroth

Downloaded from http://www.everyspec.com

GmbH, Lohr am Main, Germany, 1986.

A. Esposito, *Fluid Power With Applications*, 2nd Ed., Prentice-Hall, Inc., Englewood Cliffs, NJ, 1988.

Mobile Hydraulic Design Symposium Proceedings, Fluid Power Society, Milwaukee, WI, 1978.

R. W. Fox, and A. T. McDonald, *Introduction to Fluid Mechanics*, 3rd Ed., John Wiley & Sons, Inc., New York, NY, 1985.

T. Frankenfield, *Using Industrial Hydraulics*, The Rexroth Corporation, Bethlehem, PA, 1979.

C. C. Hedges, *Fluid Power Designers Manual*, Womack Educational Publications, Dallas, TX, 1965.

A. H. Hehn, *Fluid Power Troubleshooting*, Marcel Dekker, Inc., New York, NY, 1984.

J. E. Johnson, *Electrohydraulic Servo Systems*, Penton/IPC, Cleveland, OH, 1977.

R. P. Lambeck, *Hydraulic Pumps and Motors: Selection and Applications for Hydraulic Power Control Systems*, Marcel Dekker, Inc., New York, NY, 1983.

D. McCloy, and H. R. Martin, *Control of Fluid Power*, 2nd Ed., Ellis Harwood Limited, Chichester, England, 1980.

Industrial Hydraulic Technology, Parker Hannifin Corporation, Training Department, Power and Controls Group, Cleveland, OH, 1974.

M. J. Pinches, and J. G. Ashby, *Power Hydraulics*, Prentice-Hall International (UK) Ltd, Hemel Hempstead, Hertfordshire, England, 1988.

J. J. Pippenger, *Hydraulic Cartridge Valve Technology*, Amalgam Publishing Company, Jenks, OK, 1990.

J. J. Pippenger, *Hydraulic Valves and Controls: Selection and Application*, Marcel Dekker, New York, NY, 1984.

J. J. Pippenger, *Zero Downtime Hydraulics*, Amalgam Publishing Company, Jenks, OK, 1989.

W. Reeves, *The Technology of Fluid Power*, Prentice-Hall, Inc., Englewood Cliffs, NJ, 1987.

I. Shames, *Mechanics of Fluids*, McGraw-Hill Book Company, New York, NY, 1962.

A. L. Simon, *Hydraulics*, 3rd Ed., John Wiley & Sons, Inc., New York, NY, 1986.

C. E. Snyder *et al.*, "Determination of the Flammability Characteristics of Aerospace Hydraulic Fluids", Lubrication Engineering 37, 12, 705-14 (December 1981).

C. E. Snyder *et al.*, ' Air Force Nonflammable Hydraulic System Materials Development", Society of Automotive Engineers Paper No. 851908, Air Force Wright Aeronautical Laboratories and University of Dayton Research Institute, October 1985.

J. A. Sullivan, *Fluid Power: Theory and Applications*, 3rd Ed., Prentice-Hall, Inc., Englewood Cliffs, NJ, 1989.

C. M. Svoboda, and J. C. Warrick, *Design and Development of Variable-Load Energy Absorbers*, Report No. NADC-80257-60, Naval Air Development Center, Warminster, PA, June 1981.

M. J. Tonyan, *Electronically Controlled Proportional Valves*, Marcel Dekker, Inc., New York, NY, 1985.

W. Wolansky, and A. Akers, *Modern Hydraulics: The Basics at Work*, Merrill Publishing Company, Columbus, OH, 1988.

F. Yeaple, *Fluid Power Design Handbook*, 2nd Ed., Marcel Dekker, Inc., New York, NY, 1990.

Dynamic Testing of Energy Attenuating Devices, Phase Report, NADC-AC-6905, Naval Air Development Center, Warminster, PA, October 1969.

Aircraft Crash Survival Design Guide, Volume IV—Aircraft Seats, Restraints, Litters, and Cockpit/Crew Delethalization, USAAVSCOM TR 89-D-22D, US Army Aviation Research and Technology Activity, Fort Eustis, VA, December 1989.

Downloaded from http://www.everyspec.com

Downloaded from http://www.everyspec.com

CHAPTER 7
STORAGE AND HANDLING, CONTAMINATION, AND CONTAMINATION CONTROL

Proper procedures and precautions for the storage and handling of hydraulic fluids are discussed. Procedures and tests for contamination control are also presented. Chemical and biological (CB) agents as contaminants are addressed in detail.

7-1 CONTAINERS

7-1.1 INTRODUCTION

The function of hydraulic fluid containers is simply to contain the fluid during transport and storage. The container must be strong and tight enough to assure protection of its contents, and it must preserve the original cleanliness of the fluid. Factors important to the design and selection of containers for a specific hydraulic fluid include the container materials and dimensions and the storage conditions to which it will be subjected. Also of importance are standards for proper labeling and guidelines for the purchasing and ordering of containers.

7-1.2 CONTAINER MATERIALS

Industrial and military requirements for materials for hydraulic fluid containers vary, but the usual material is steel or aluminum. In general, military hydraulic fluid specifications for containers of one gallon or less require that they be packaged in metal cans, 28 gage or lighter, and conform to Federal Specification PPP-C-96 (Ref. 1). Heavier gage steel is used for containers of 5- and 55-gal capacities. For instance, 55-gal drums must comply with Federal Specification PPP-D-729 (Ref. 2) and range from 12 to 18 gage; 5-gal containers must comply with Federal Specification PPP-P-704 (Ref. 3) and range from 24 to 26 gage.

Exterior coatings for military purposes usually conform to Federal Specification TT-E-515 (Ref. 4) for quick-drying enamel. Containers of one gallon or less are generally painted red, whereas larger containers are painted olive drab or tan. Exterior coatings for commercial use depend on the manufacturer's preference and frequently incorporate a color code to distinguish the contents.

Interior coatings or liners are common in hydraulic fluid containers made for commercial use, especially the 55-gal drums. For military specification fluids, however, interior coatings or liners generally are not required. When interior coatings or liners are used, they must be of a material that will not react with the hydraulic fluid.

7-1.3 CONTAINER SIZES, STORAGE, AND MARKING

MIL-STD-290 (Ref. 5) includes detailed information regarding the required methods of packaging, packing, and marking of hydraulic fluid containers. Table 7-1 lists and Figs. 7-1, 7-2, and 7-3 illustrate applicable data regarding size.

Storage conditions are frequently included in hydraulic fluid specifications. For example, hydraulic fluid specification MIL-H-5606 states that "prior to use in the intended equipment, the product may be stored under conditions of covered or uncovered storage in geographic areas ranging in temperature from –57 to 49°C (–70 to 120°F)" (Ref. 6). Hydraulic fluid specifications often include the storage stability requirements that a liquid must meet to become qualified under the specification. For example, in MIL-H-5606 a candidate liquid must pass the following storage test: "The fully blended product shall show no separation of ingredients nor evidence of crystallization, shall be clear and transparent when examined visually, and shall conform to the requirements [set forth in this specification] after 12 months

TABLE 7-1. HYDRAULIC FLUID CONTAINER SIZES (Ref. 5)

CONTAINER	CONTAINER CAPACITY	TYPE	CLASS	CAP DESIGN	SHAPE
Can	1 pint	V	4, 8	Hermetically sealed	Cylindrical
Can	1 quart	V	4, 8	Screw cap, spout, or special closure	Oblong
Can	1 quart	I	–	Hermetically sealed	Cylindrical
Can	1 gallon	V	4, 8, 9	Screw cap, spout, or special closure	Oblong
Can	1 gallon	I	–	Hermetically sealed	Cylindrical
Pail	5 gallon	–	–	Screw cap, spout, or special closure	Cylindrical
Drum	16 gallon	VI	–	Screw cap, spout, or special closure	Cylindrical
Drum	55 gallon	III, IV	B	Bung	Cylindrical

Downloaded from http://www.everyspec.com

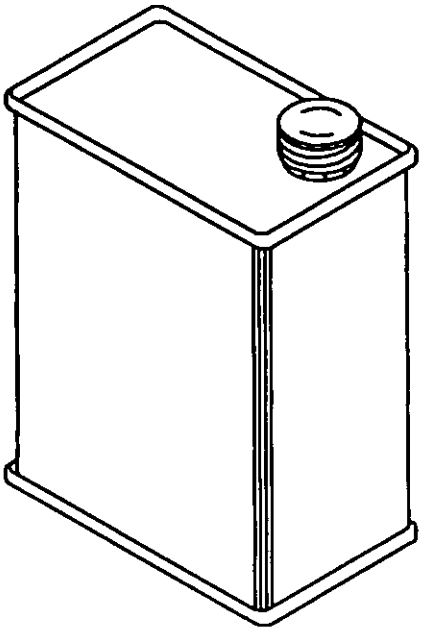

Figure 7-1. One-Gallon Screw Cap Can, Type V, Class 4 (Ref. 5)

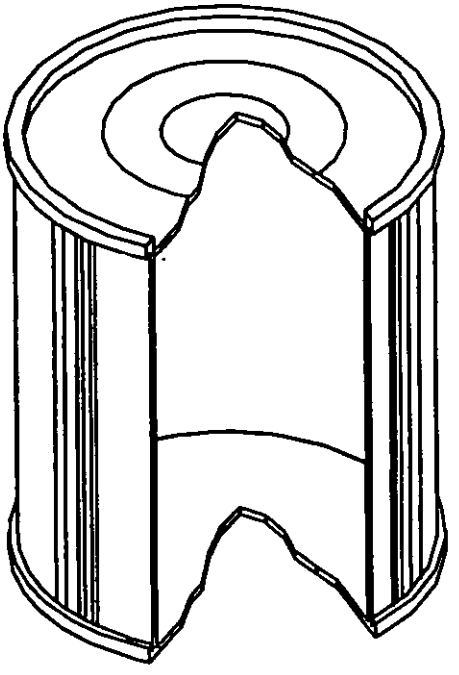

Figure 7-2. One-Quart Hermetically Sealed Can, Type I (Ref. 5)

storage as specified in. . . [FED-STD-791C Method No. 3465 (Ref 7)].".

Marking instructions required on hydraulic fluid containers for military use are given in MIL-STD-290 (Ref. 5). References given in MIL-STD-290 (Ref. 5) specify the colors and types of inks (Ref. 8), lacquers (Ref. 9), and enamels (Ref. 10) to be used for marking containers. The information normally required on large containers and its proper location are illustrated in Figs. 7-4 and 7-5.

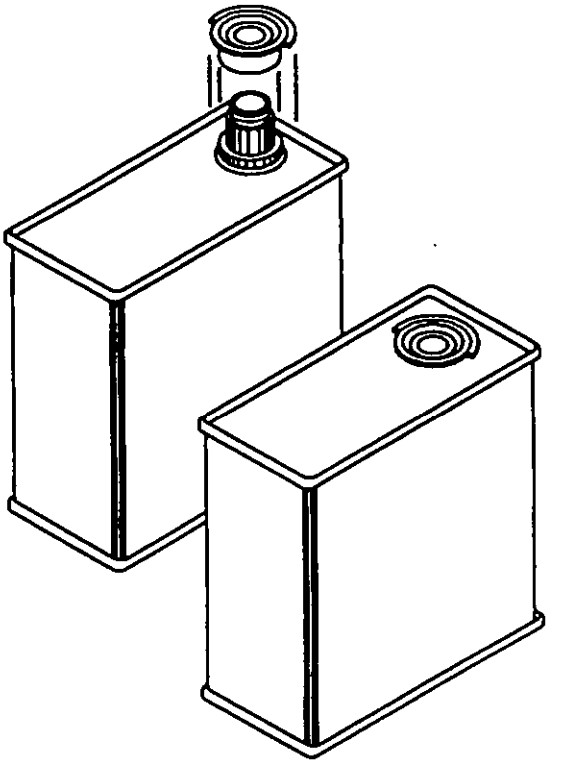

Figure 7-3. One-Pint Spout Top Can, Type V, Class 8 (Ref. 5)

Caution, warning, and instruction markings are sometimes required on containers. For example, MIL-H-27601 (Ref. 11) containers must include the following markings: "INSTRUCTIONS: Destroy all markings on this container when empty. Do not mix with any fluid except those of MIL-H-27601 and revisions.".

7-2 CONTAMINANTS

Fluids used in hydraulic systems must meet high standards of purity in order to ensure an acceptable degree of performance, reliability, and component life. It is stated in Ref. 12 that at least 75% of all hydraulic system failures are the result of contaminated fluid. The vast majority of these failures can be prevented by an aggressive contamination control program that includes the following elements:

1. *Contaminant exclusion.* Prevent the entry of contaminants into the system.

2. *Contaminant removal.* Have high-quality system filtration.

3. *Fluid monitoring.* Sample the system fluid for analysis regularly.

4. *Minimizing contaminant effects.* Select system components known to have high contaminant tolerance.

Downloaded from http://www.everyspec.com

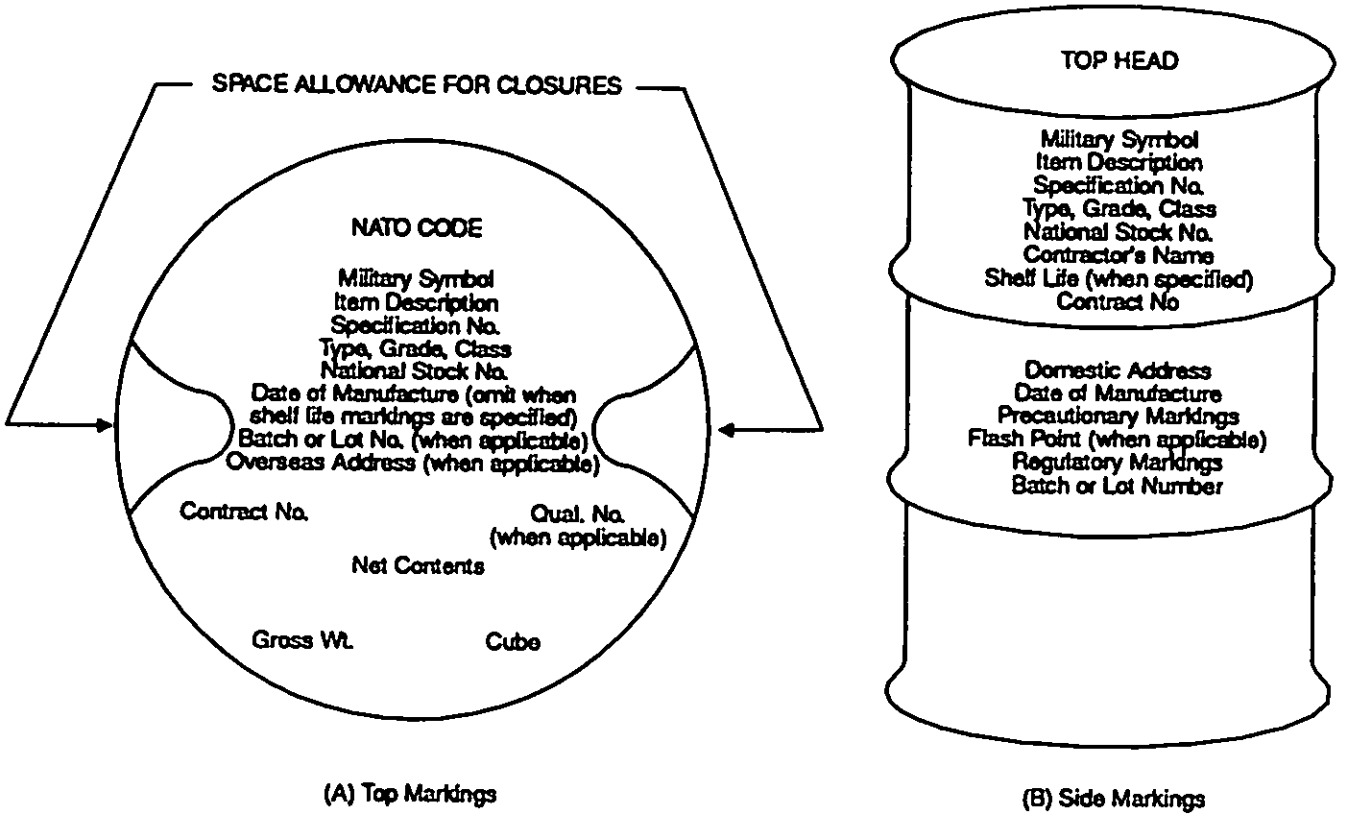

Figure 7-4. Markings on Top and Side of 55-gal Drum (Ref. 5)

5. *Education*. Ensure that all maintainers and operators have a good understanding of the causes and effects of fluid contamination.

There are numerous sources of fluid contamination, but improper storage and handling of new fluids contribute significantly to the contamination problem.

7-2.1 SOURCES OF CONTAMINATION

Contamination can originate from many different sources. The major sources are the manufacturer, the environment, maintenance activities, internal generation, and fluid servicing.

Contaminants can enter a system in many ways. Improperly stored or improperly handled fluids can contribute very high levels of particle and liquid contamination during oil servicing. Tests have shown that a typical new fluid contains an average of over 5000 particles per mL that are 5 µm and larger (Ref. 13). This level far exceeds the limits recommended by most component manufacturers for the operation of their hardware.

Regardless of the condition of the new fluid in its original container, improper storage of the container after it has been opened and the use of dirty containers to transfer the fluid to the system cause serious contamination problems.

In addition to being introduced by fluid servicing, contaminants can enter the system through the reservoir breather (if used), the rod wiper seals on hydraulic cylinders, and contaminated replacement components.

7-2.1.1 Ingested, Injected, and Generated Contaminants

Contaminants in the fluid can be classified according to source as ingested, injected, or generated, depending upon the means by which the contaminant entered the system. Ingested contaminants are those that enter the system from the environment. The primary protection from ingestion lies in good system design and sound maintenance practices.

Ideally, a system should be designed to prevent ingestion. The most effective technique is the use of a sealed reservoir that does not "breathe in" external air. Alternative methods include the use of vacuum breakers (relief valves) or high-efficiency breather filters (including desiccators in areas in which high humidity presents a significant moisture hazard).

Ingestion by way of cylinder rods can be reduced by using highly effective rod wiper seals. The ability of such seals to exclude solid particles from the system can be evaluated through the use of SAE J 1195 (Ref. 14). In some applications boots can effectively exclude contaminants; however, these devices must be carefully maintained to ensure that they do not become contaminant traps rather than contaminant excluders. During maintenance activities,

Downloaded from http://www.everyspec.com

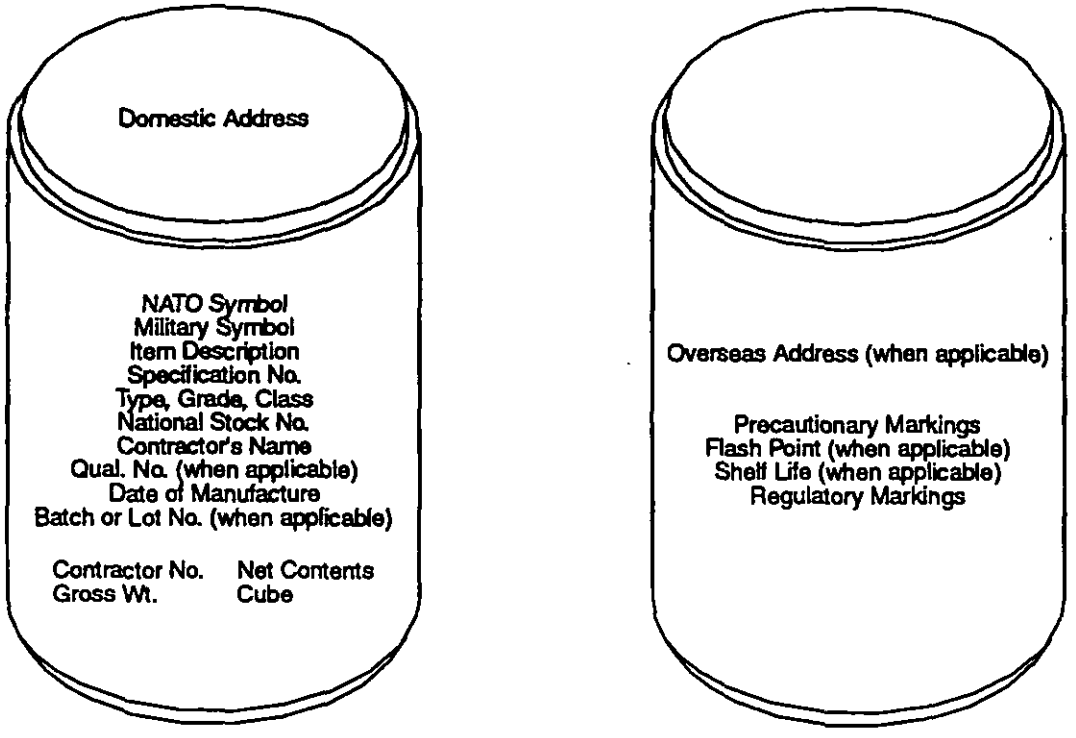

(A) Side

(B) Opposite Side

Figure 7-5. Markings on Sides of 5-gal Tight-Head Pail (Ref. 5)

all open fittings, conduits, and ports should be capped or plugged to prevent ingestion.

Injection occurs when the contaminants enter the system either in manufacture or in operation through human actions. It is very difficult to ensure that contaminants do not remain after manufacture; the customer can be protected to some extent by invoking a "roll-off cleanliness requirement" for components or systems. The assessment of component cleanliness levels can be accomplished by using the appropriate sections of SAE J 1227 (Ref. 15).

Another major source of contaminant injection is contaminated fluid. Protection from this problem begins with the proper storage and handling of new fluids. Since it is highly likely that large containers will contain significant levels of particulate contamination, it is required that the fluid be filtered prior to use. Many users filter the fluid continuously with a portable filter unit once the container has been opened. Fluid is transferred from the container to the system by this same unit. The use of a quick disconnect instead of a standard filler cap provides another method of preventing contaminant injection.

Another common injection problem occurs during the overhaul of components. A dirty environment, dirty tools, and even the technician's hands can leave contaminants on every part of the component. Test bench fluid is often a major contaminant source that leaves a newly overhauled component filled with contamination that is subsequently injected into the systems. Managers of overhaul facilities must insist upon a clean operating environment and even extreme attention of the technicians in order to preclude contaminating the components on which they are working. Education is a major part of this effort, but it should be accompanied by the proper emphasis. Test benches should include filters with very high beta ratings (See par. 2-7.) to prevent cross-contamination of components.

The internal generation of contaminants is the result of several factors, such as the fluid, operating pressures, level of fluid contamination, and cavitation and aeration. In a properly designed system the fluid contamination level is the most critical factor. Simply stated, contamination breeds contamination. Existing particles, whether they are dirt or metal, cause wear, which generates more particles. The basic rule for preventing internal generation is "Keep it Clean, and Keep it Cool".

7-2.1.2 Moisture Contamination During Storage

Moisture is one of the greatest enemies of hydraulic fluids and systems, except for aqueous-type hydraulic fluids and the systems designed to use them. In general, special care should be taken to make containers waterproof, especially when they are stored without protection from the weather. Introduction of moisture into waterproof contain-

Downloaded from http://www.everyspec.com

ers by "breathing" and condensation is a problem whenever containers are exposed to frequently and widely varying temperatures. For this reason storage conditions under which such problems can occur should be avoided. Containers stored out-of-doors should be stored on their sides to prevent water from standing on container tops. Container lids and bungs should be periodically checked for tightness.

7-2.1.3 Contamination Accompanying Additives

Impurities accompanying additives are, in the strictest sense, a manufacturing problem but one that may ultimately belong to the hydraulic fluid handler. For example, it has been reported that an additive in some MIL-H-5606 fluids has on occasion been found to contain a contaminant soluble in the additive itself but insoluble in the finished hydraulic fluid (Ref. 16). Some additives for hydraulic fluids can cause considerable contamination problems when moisture accumulates in the hydraulic fluid. Hydraulic fluids with corrosion inhibitors tend to form a slime with moisture contamination (Ref. 16).

Mahogany sulfonate rust inhibitors, widely used in finished hydraulic fluids, can also be a source of contamination, i.e., rusting and staining of steel in a hydraulic system. Some mahogany sulfonates contain inorganic water-soluble salts, such as calcium chloride and calcium sulfate, ranging from 0.02 to 0.19%. Data show that the concentration of inorganic salts does not appear to affect the rust prevention properties of the mahogany sulfonates, but their presence does produce corrosion by galvanic action. Use of petroleum hydraulic fluids containing sulfonates with a relatively high chloride content of 0.12% produced system malfunctions, whereas use of petroleum hydraulic fluids containing sulfonates with less than 0.03% of the salt permitted satisfactory operation (Ref. 16).

7-2.2 TYPES OF CONTAMINANTS

The many impurities that can adversely affect hydraulic fluids can be classified as either solid particle or liquid contaminants. The most common and most troublesome liquid contaminant is water, but liquid contaminants include all foreign liquids, both miscible and immiscible. Solid particle contaminants are self-defined. They are impurities that may either be chemically reactive with hydraulic fluids or that may foul hydraulic systems.

7-2.2.1 Water as a Contaminant

Although water was the first liquid to be used in a hydraulic system, it is generally a harmful contaminant (Ref. 17) in current sophisticated hydraulic systems. Depending on the properties of the liquid under consideration, water will either form an emulsion in the hydraulic fluid (up to a certain percentage) or be partially immiscible with the hydraulic fluid, i.e., some water will be floating on the surface of the hydraulic fluid or settling to the bottom of the container. Immiscible, or free, quantities of water in a hydraulic fluid are usually the result of careless handling and cause damage to both the hydraulic fluid and the system. Unwanted water in a hydraulic fluid leads to a multitude of problems in terms of hydraulic system damage and failure. The worst threats of water contamination are its corrosive effects and the subsequent fluid and/or system contamination with corrosion particles.

One clarification concerning water and hydraulic fluids must be made, however. In certain fire-resistant hydraulic fluids, water is a welcome ingredient and makes up from 20 to 70% of the liquid. Such fire-resistant hydraulic fluids are formed by an emulsion of water dispersed in a second liquid, such as oil or a glycol. In these liquids the distinction between water as a needed ingredient and water as a contaminant is clear.

A distinction must be made between oil-in-water emulsions and water-in-oil emulsions. Although a stable solution can be made by dispersing oil in water, problems with corrosion and wear are more apt to occur with this type of emulsion. "Inverse", or water-in-oil, emulsions, on the other hand, offer the fire-resistant quality of water while retaining the lubricating and anticorrosion qualities of the oil. In inverse emulsions water is the dispersed phase and oil is the continuous phase. In oil-in-water emulsions the situation is reversed—the oil is the dispersed phase and the water is the continuous phase.

7-2.2.2 Solid Particle Contaminant

Of all contaminants solid particles are those most frequently of concern. Their measurement is usually determined according to size and number. The cleanliness of a hydraulic fluid is normally reported as the relative "solid particle cleanliness".

Solid particle contaminants are either of the fibrous or nonfibrous variety. Fibrous particles have a length-to-diameter ratio greater than 10 to 1. Nonfibrous solid particle contaminants include all particles not in the fibrous class. Their irregular shapes make it necessary to define their size by their largest dimension if microscopic analysis is used or by an equivalent spherical diameter if automatic particle counters are used.

The unit of measurement for solid particle contamination is the micrometer (about 39 millionths of an inch). The normal human eye can detect particles as small as 40 μm. However, contaminant particles as small as 0.5 μm can be of concern.

Because of the wide variety of hydraulic fluids and their equally wide variety of applications, there are many standards of fluid cleanliness. MIL-H-5606F requires that the following particle size ranges be met (Ref. 6). There are to be no more than 10,000 particles between 5-15 μm, no more than 1,000 particles between 16-25 μm, and no more than 5 particles over 100 μm in 100 mL of fluid.

Downloaded from http://www.everyspec.com

Indeed, if contamination levels are to be established for a hydraulic fluid, it is best to refer to the data from the manufacturer for the most reliable indication of the contamination limits and to consider the design of the system(s) in which the liquid will be used. Also it is important to remember that what may be a "clean" fluid in one application may not be "clean" enough for another. The specific application of a fluid is always the ultimate factor in determining contamination limits. Other common specifications for controlling and specifying solid particle contaminant levels include MIL-STD-1246, National Aerospace Standard (NAS) 1638, and ISO 4402 (Refs. 18, 19, and 20).

7-2.2.3 Liquid Contaminants Other Than Water

In addition to solid particle and water contamination, contamination from other liquids, both miscible and immiscible, can occur. Liquid contaminants in hydraulic fluids are often a result of mixing (accidental or intentional) two or more hydraulic fluids. Accidental mixing often occurs when replacing the hydraulic fluid in a system with another hydraulic fluid without a thorough cleaning of the system. Liquid contamination of a hydraulic fluid can also occur when transferring the liquid into unclean containers. In general, such transfers should be avoided. In some cases, however, military specifications indicate that two different liquids are compatible and may be mixed. Such a mixture may be considered usable because it does not form resinous gums, sludges, or insoluble solid materials; however, the liquids in the mixture are contaminated in the sense that the liquids may no longer retain their original characteristics. Such characteristics may be critical in certain applications that require a "clean" fluid.

Contamination of a hydraulic fluid by oils or solvents used in or on the hydraulic system frequently occurs. This type of contamination reduces the effectiveness of the hydraulic fluid by changing characteristics, such as viscosity, density, and lubricating ability, or by attacking system components, such as seals. However, the oil or solvent may have no chemical effect on the hydraulic fluid itself, particularly in the cases of petroleum-base hydraulic fluids and petroleum fraction oils or solvents (Ref. 16).

Chemical contamination of a hydraulic fluid is generally a rarer occurrence and can be difficult to trace. Some instances of chemical contamination have been explained by deposits of cleaning compounds left on surfaces, by reaction of an additive with seals or filters, or by other such unusual instances. A common cleaning compound found in hydraulic fluids is chlorinated solvents. Numerous cases have been reported of corrosion of hydraulic components that resulted from the presence of trace amounts of chlorinated, or halogenated, solvents (Refs. 17, 21, 22, 23, and 24). It is generally accepted that chlorinated solvents must be kept below 200 parts per million (ppm).

7-2.2.4 Microbiological Contaminants

Microorganisms can grow in hydraulic fluids to some extent. However, most of the problems associated with this type of contamination occur in the handling and use of aviation fuels, and most of the research work pertains to the effect of microbiologically contaminated fuels. The problem deserves a discussion in relation to hydraulic fluids, however, because microbiological contamination can occur in hydraulic fluids. If sufficient quantities of the organisms are allowed to grow unchecked, they can clog filters, restrict small orifices, and cause poor operation of close-tolerance parts.

The growth of microorganisms can be accelerated by the presence of other contaminants in the hydraulic fluid. Water contamination, for example, provides an environment necessary for the growth of living organisms. In most cases, elimination of microbial contaminants with biocides does not solve the underlying contaminant problems that originally contributed to growth of the microorganisms (Ref. 25).

7-2.3 EFFECTS OF CONTAMINATION

Contamination in a hydraulic system damages the hydraulic fluid and the system in which it is used. The degree of contamination usually begins at a low level and increases because of the formation of contaminants in the system itself, especially solid particle contaminants caused by system wear, oxidation, and corrosion.

7-2.3.1 Effects of Contamination on the Hydraulic Fluid

Ideally, contamination should be excluded totally or removed immediately upon entry or generation. Any contamination, regardless of type, that is allowed to remain in the fluid can aggravate the contamination problem by further degrading the fluid. The destructive effects of contamination are often of a "chain reaction" nature and produce further damage to the liquid (except chlorinated solvents or other working fluids). Although this is not always the case, it is easier to prevent damage by avoiding contamination through proper handling and storage techniques than it is to make the repairs that may be required as a result of using contaminated liquid.

There are a number of situations in which contaminants can grow even within a closed and sealed system. One example of the "chain reaction" that can occur is the effect of moisture in hydraulic fluids without anticorrosion additives. Corrosion particles resulting from moisture, in effect, act as wear particles, which expose clean metal surfaces that subsequently become corroded (Ref. 16).

7-2.3.2 Effects of Contamination on the Hydraulic System

All components in the hydraulic system are susceptible to the destructive forces of fluid contamination. Solid particles

Downloaded from http://www.everyspec.com

cause wear and jamming. Air and vapor cause pitting and erosion. Acids cause etching and corrosion. Chemical contamination destroys or degrades the fluid structure with varying effects. Water in petroleum-oil systems affects viscosity and lubricity, degrades additives, and can promote rust and corrosion. The list goes on almost indefinitely.

Particles can be crudely categorized by their size relative to the sizes of the fluid flow paths through the components. They can be larger than the flow path, approximately the same size, or significantly smaller as shown in Fig. 7-6. Each relative size poses a different type of contamination problem.

Large particles can block ports and orifices. They can also cause a transient malfunction in directional and pressure control valves. This malfunction—often termed coincident jamming—occurs when a particle is trapped by the moving mechanism as it moves from one position to another. An example would be a large particle lodged between a poppet and its seat that prevents the full closing of a relief valve. Another possible example is a particle trapped between the spool land and the fluid port edge of a servo valve as shown in Fig. 7-7 (Ref. 26).

Particles that are approximately the same size as the clearance between two moving surfaces can cause both jamming and wear. Jamming occurs when the large, hard particle becomes wedged between the surfaces (usually in a valve). Unless it can be dislodged by cycling the valve or crushed by the system forces, the spool will jam and can be cleared only by disassembly.

Another problem with this size particle is cutting and gouging of the two surfaces as the particle passes through the clearance. A more serious wear problem occurs when a very hard particle enters the clearance between two dissimilar materials of which one is much softer than the other. It is likely that the particle will become embedded in the softer material and act as a cutting tool against the harder material. This mode occurs very often in hydraulic cylinders and piston-type accumulators that have elastomeric or soft metal seals. The seals act as the "tool holder" in these cases.

Although it would seem that particles significantly smaller than the flow paths would be relatively innocuous,

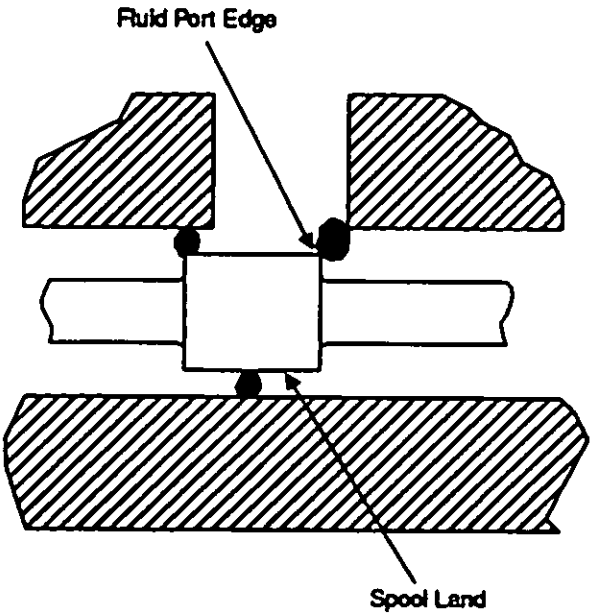

Figure 7-7. Jamming of Valve Spool by Particles (Ref. 26)

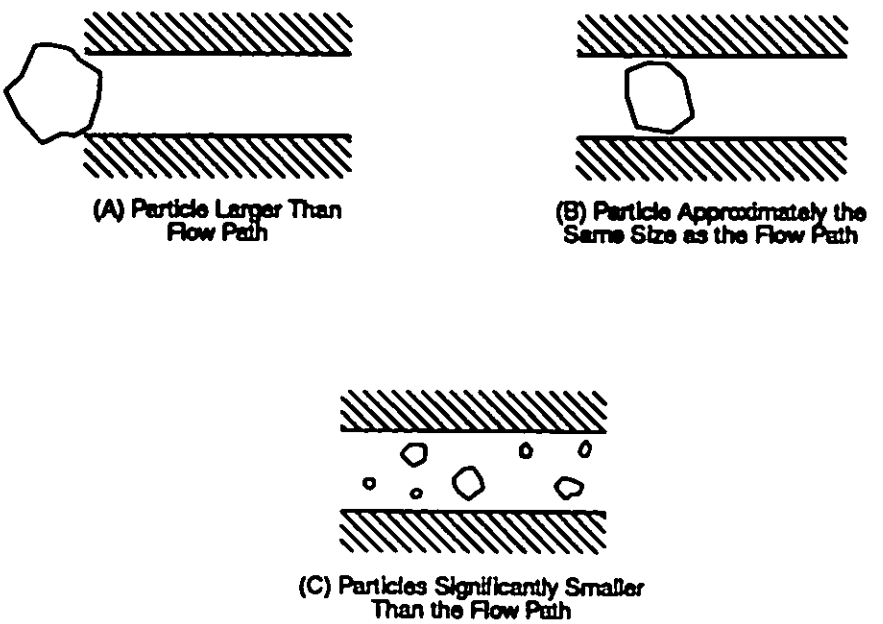

Figure 7-6. Relative Particle Sizes

Downloaded from http://www.everyspec.com

they can be extremely detrimental to very close-tolerance valves, especially zero-lap or line-to-line servo valves. High concentrations of these particles—usually 10 μm and smaller—form contamination termed silt. When flowing through very small clearances at high velocities, silt can erode spool lands rapidly and render the valve inoperable. Fig. 7-8 shows before and after photographs of a servo valve that was subjected to a high level of silt in an operating system.

Contamination-related system malfunctions can be classified as degradation, transient, and catastrophic. Transient failures, as discussed previously, are frequently the result of particles being trapped by the moving mechanism. They can often be cleared by cycling the valve.

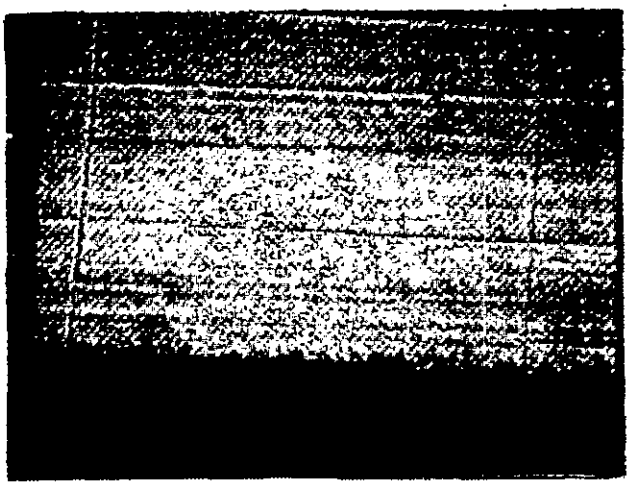

(A) New Surface of a Servovalve Spool (500X Magnification)

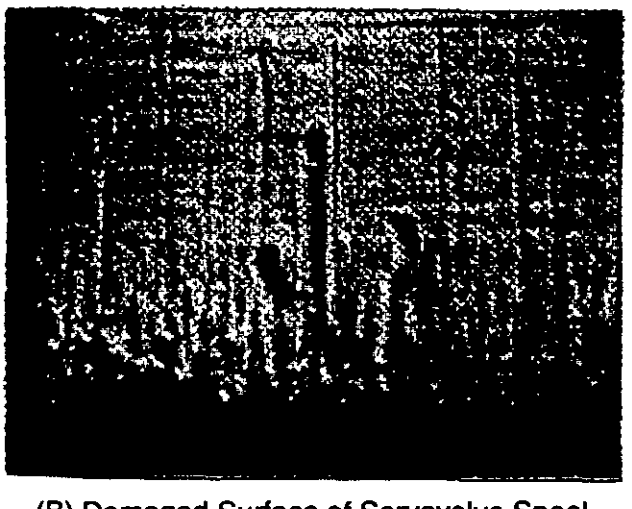

(B) Damaged Surface of Servovalve Spool (500X Magnification)

The use of photos, graph, and text authorized by Alan Goldsmith.

Figure 7-8. Example of Servovalve Spool Damage by Contamination (Ref. 27)

Degradation and wear are long-term deterioration of the system hardware. This is the most common failure mode for virtually all components. Pump flow rate degrades because the internal clearances are increased and increased slippage results. Valve leakage increases because radial clearances, lands, poppets, seats, etc., are worn out. Cylinder speed declines due to wear of the cylinder barrel.

Catastrophic failures are often the culmination of long-term, unchecked degradation, jammed valve mechanisms, or blocked orifices. More often, however, catastrophic failures result from material problems, maintenance malpractice (such as "tweaking" the system relief valve), or abuse and misuse.

Contamination-related failures can be eliminated by a well-planned and -executed contamination control program. An important part of the contamination-removal phase is the selection of system filters. The degree of protection required depends on the contaminant sensitivity of the system components. Normally, filtration is selected to ensure that the system contamination level does not exceed the acceptable level for the most sensitive component. In some cases, however, it is more effective to provide a dedicated filter for the most sensitive component than to try to maintain the entire system at the level required to protect that one component.

Component contaminant sensitivity can be expressed as the omega rating of the component. Omega ratings are the results of tests designed to determine the degradation, increased leakage, or propensity for jamming of the component when operated in fluid that has been contaminated to a known level. The standard tests for contaminant sensitivity are listed in Table 7-2. Other component tests are listed in Ref. 28.

TABLE 7-2. COMPONENT CONTAMINANT SENSITIVITY TESTS (Ref. 28)

COMPONENT	TEST
Hydraulic Accumulators	SAE RP J 1227
Hydraulic Motors	MIL-M-7997 NFPA T39.25
Hydraulic Pumps	NFPA RS T3.9.18
Hydraulic Reservoirs	SAE RP J 1227
Valves	ISO 6404 See also Ref. 28.

Reprinted with permission. Copyright © by Oklahoma State University, School of Mechanical and Aerospace Engineering.

Downloaded from http://www.everyspec.com

Many component manufacturers are now specifying the fluid cleanliness requirements in terms of the ISO Solid Contaminant Code (Ref. 29). This makes the selection of filters the responsibility of the user more so than in previous situations in which the manufacturer specified the filter requirements.

7-2.4 CONTAMINATION ANALYSIS

The required cleanliness of a hydraulic system is relative and is dependent on the design of the particular system. Although the criteria for cleanliness may vary for different systems, the methods of contaminant measurement are basically alike. Methods of solid particle contaminant measurement involve counting, sizing, and/or weighing of the particles in a given volume of fluid. Methods used to determine the amount of liquid contaminants present in hydraulic fluids usually involve chemical or physical procedures, such as distillation, separation with a solvent, or isolation of the contaminant by chemical reaction.

7-2.4.1 Solid Particle Contamination Measurement by Counting

The most common method used to assess solid particle contaminant levels is particle counting. Normally the particle sizes are measured and the number of particles is reported in specified size ranges. The report may show the number of particles between certain sizes, e.g., 5 to 10 µm, or the number of particles equal to and larger than a specified size, e.g., ≥10 µm.

The most commonly used methods for particle counting are microscopic counting and automatic counters. These methods are described in the subparagraphs that follow.

7-2.4.1.1 Microscopic Particle Counting

7-2.4.1.1.1 Description

Despite the current unpopularity of microscopic particle counting, there are times when a visual confirmation or contamination insight requires that microscopic analysis be considered. When this is necessary, the fluid is passed through a membrane filter, where particles impinge and deposit on the surface. The analysis depends on a visual examination of the particles on the membrane. To classify particles, the size and number of particles should be determined by use of a microscope and a calibrated reticle. Various reticles can be used, including the ocular micrometer with a linear scale, the globe and circle reticle, the Proton reticle (disc type), and the split-image eyepiece. A stage micrometer is often used to calibrate the reticles. An imprinted grid on the membrane allows the total number of particles present to be estimated by statistical methods. This is accomplished by counting the number of particles on a representative number of grid squares and estimating the total number of particles present on the 100 imprinted grids on the membrane. The following standards control microscopic particle counting: SAE ARP-598 and ASTM F 312 (Refs. 30 and 31).

7-2.4.1.1.2 General Procedure

The Sample Preparation Procedure used for virtually all microscopic counting is identical to that specified in SAE ARP-598, as are the Microscopic Calibration and Particle-Counting Procedures. Most laboratories use a split-image eyepiece to size particles in order to relieve eyestrain and boredom. The microscopic counting is performed in a clean room where dust particles in the air cannot affect the number of particles in the sample. In most instances, the procedure requires only that the largest particle or the number of particles greater than 100 µm be identified by the microscope (Ref. 30).

7-2.4.1.2 Automatic Particle Counting

7-2.4.1.2.1 Description

The sizing and counting of particles to give a quantitative assessment of the contamination level of a fluid has been performed since the mid 1950s. In early days the measurement was dominated by microscopic methods, but automatic particle counters were destined to replace this time-consuming, nonrepetitive, and nonreproducible method. Today, there are several acceptable automatic counting systems available to the user, and there is a national (ANSI B 93.28M) and an international (ISO 4402) standard by which such systems can be calibrated to give reproducibility between counters in different laboratories within 6% (Refs. 32 and 20). The confidence that can be gained in the accuracy of particle size distributions used to reflect fluid contamination levels is evidenced by the prevalence of particle counters throughout the industry.

7-2.4.1.2.2 Procedure

Automatic particle counters are used to perform particle size distribution analysis. The particle counter is first set to the desired threshold levels. The sensor is flushed and the correct flow rate is adjusted. The sample is shaken, deaerated, and, if necessary, diluted. The sample is run through the particle counter at the specified flow rate, and the number of particles per milliliter of sample at each micrometer size range is determined. The counters used to measure the fluid contamination level should be the latest standard production models and routinely calibrated for sizing particles greater than 5 to 200 µm. In special cases, particles greater than 0.5 to 5 µm can be counted.

7-2.4.1.2.3 Results

The information obtained from the automatic particle counters is given on a digital printout of the number of particles per milliliter greater than each designated size. Once these counts are available, they can be graphically depicted on a Solid Contamination Chart and a Cleanliness Code is

Downloaded from http://www.everyspec.com

assigned, such as ISO 4406 (Ref. 29), MIL-STD-1246 (Ref. 18), and NAS 1638 (Ref.19).

7-2.4.1.3 Semiquantitative Particle Analysis

In addition to the quantitative techniques described in the previous paragraphs, there are semiquantitative techniques that can be used successfully for on-site analyses. One such method employs a fluid sampling set containing a membrane filter. From a sampling valve permanently installed in the hydraulic system, 100 mL of fluid is passed through the membrane. The membrane is removed from its container and placed between two glass slides that have been specially cleaned. A solution is used to render the membrane transparent.

The prepared membrane slide is then viewed under a 50-power microscope and compared with master slides that have been contaminated to known levels. A determination is made as to whether the sample slide is cleaner or dirtier than the master slide. Since the contamination levels of the master slide are known, classification within a particle count range can be achieved. This system is also useful as a Go/No Go tool; one master slide represents the upper limit of contamination allowable for a specific system. Refs. 33, 34 and 35 provide the details of this procedure.

Another semiquantitative method is commonly referred to as the "patch test". This method also requires that the sample fluid be passed through a suitable membrane. In this case, rather than a microscopic analysis, the color of the sample membrane is compared with a set of color patches representing various contamination levels. The primary comparison factor is patch color rather than actual particle counts.

7-2.4.2 Solid Particle Contamination Measurement by Weighing

7-2.4.2.1 Description

This method, commonly referred to as "gravimetric analysis", provides a means of assessing the total contaminant weight entrained in a fluid. It does not differentiate between particle sizes above the pore size of the membrane used to collect the contaminant. The procedure is accomplished by following reputable standards, such as SAE ARP 785 and ISO 4405 (Refs. 36 and 37). The gravimetric analysis of a fluid is particularly valuable when the concentration of particles entrained in a fluid is too great for appraisement by particle counters or when the upward deviation of the particle size distribution curve at the small size end suggests an uncontrolled system for silt-size particles—the extent of which cannot always be assessed due to limitations of particle-sizing equipment.

7-2.4.2.2 General Procedure

The total weight of the particulate contaminant is determined by filtering a known volume of liquid through two superimposed, identical, preweighed membranes, and the fluid remaining in the membranes is flushed through with a prefiltered solvent. The net weight—total membrane weight less tare—difference after filtration between the two membranes gives the total solid contaminant weight in the filtered fluid. It is customary to express the gravimetric level of a liquid in units of mg/L. Sometimes 100 mL of fluid is used as the reference volume in the aerospace industry. For relatively clean fluid, the use of 0.45-µm pore size membranes is common. However, for thick fluid or a slurry of fine, silt-size particles, larger pore size media are employed, e.g., 0.8, 1.2, and even 1.5 µm.

7-2.4.2.3 Results

In general, a low gravimetric level—less than 5 mg/L—usually means the system is acceptably clean and a high gravimetric level—above 100 mg/L—means an intolerable situation. The gray zone between acceptably clean and intolerably contaminated depends upon the shape of the particle size distribution curve. If the particle size distribution indicates proper control of the larger particles, a gravimetric analysis will reveal the larger particles and a particle count will reveal to what extent the silt-size particles have been allowed to multiply. Whenever the particle size distribution indicates poor control, a gravimetric analysis should be conducted (Ref. 38).

7-2.4.3 Solid Particle Contamination Measurement by Combined Counting and Weighing Methods

If solid particulates have been analyzed by counting and weighing, it is possible to get an estimate of the particulate type by relying on data developed from the contaminant test industry. In short, the particle density and size distribution both affect the correlation between counting and weighing. Thus, provided a baseline correlation can be defined, particle counting and weight measurement alone may provide indications of contaminant composition.

The technical information available on the standard test contaminant air cleaner fine test dust (ACFTD) provides such a baseline correlation (Ref. 39). Table 7-3 shows the data that correlate the number of particles greater than 10 µm for ACFTD and the weight of equivalent concentrations. Furthermore, ACFTD has a density of 2.8 g/cm^3 and is representative of what is considered "normal" environmentally induced dust.

The usefulness of Table 7-3 is that if analysis of a hydraulic fluid gives particle counts and contaminant weights that follow correlate to this table, the solid contaminant can be estimated to be of a composition equivalent to environment dust (Ref. 38). Note that although this is only an approximation, it is quite useful for a first interpretation of any solid contaminant data. It should also be noted that iron-base wear debris is approximately three times more dense than ACFTD.

Downloaded from http://www.everyspec.com

TABLE 7-3. ACFTD PARTICLE COUNT AND WEIGHT EQUIVALENT (Ref. 18)

PARTICLES PER MILLIMETER, >10μm	ACFTD CONCENTRATION, mg/L
140,000	1000
85,000	607
14,000	100
4,500	32
2,400	17
1,400	10
580	4
280	2
140	1
70	0.5
40	0.3
14	0.1
7	0.05
1.4	0.01
0.7	0.005
0.14	0.001

7-2.4.4 Liquid Contaminant Measurement

Determination of the amount of liquid contaminant present in a hydraulic fluid can become a difficult problem, especially if the contaminant is soluble or miscible in the hydraulic fluid. Since some means of measuring liquid contaminants involve chemical reactions, it is usually a prerequisite to know what kind of contaminants are being measured so that the proper reagents can be used. The problem is somewhat simplified, however, because the most common liquid contaminant is water. Procedures used to determine other types of contaminants are usually specific to the chemical nature of the hydraulic fluid. These general procedures do work well for determination of chlorinated solvent contamination in many, if not all, hydraulic fluids.

If the amount of water contaminant present in a hydraulic fluid is large, techniques such as dilution with a solvent that will separate the water into an immiscible layer can be used. When the amount of water present is small, one of two procedures is generally used. One depends upon the physical separation of water by using an entraining nonsolvent and the other on a chemical reaction.

1. *Test for Water in Petroleum and Other Bituminous Materials*

Test Methods. Federal Test Method 3001 (Ref. 40)
ASTM D 95 (Ref. 41)

These methods are used to determine the water content of bituminous materials by distillation with a water-immiscible, volatile solvent. The sample is heated under reflux with a water-immiscible solvent, which codistills with the water in the sample. Condensed solvent and water are continuously separated in a trap; the water settles in the graduated section of the trap and the solvent returns to the still.

2. *Test for Water With Karl Fischer Reagent*

Test Methods. Federal Test Method 3253 (Ref. 42)
ASTM D 1744 (Ref. 43)

These methods cover the procedures used to determine water in the concentration of 50 to 1000 ppm in liquid petroleum products. The procedure, referred to as the Karl Fischer Method, or some variation of it, is widely used to determine the moisture content of many materials. Although the test standards list the procedure only for petroleum products, it can be used on most materials for which the reagents will not produce reactions that give false readings.

Sufficient Karl Fischer reagent is diluted with pyridine to adjust its strength to a water equivalent of 2 to 3 mg water per mL of solution. Fifty mL of the sample is diluted with 50 mL of methanol-chloroform (1 part to 3 parts by volume). The sample is then added to the adjusted solution. If water is present, the solution will no longer be dry. A second adjustment with Karl Fischer reagent is made until the water equivalent of 2 to 3 mg water per mL of solution is again reached. The amount of moisture present is then determined by the amount of reagent used to reach the second end point.

7-2.4.5 Chemical Analysis

Contaminant entrained in system fluid results from both wear and nonwear processes. Often the amount of wear debris relative to the amount of ingressed or environmental contaminant needs to be assessed. Determining the concentration of elements represented in the entrained fluid contaminant and maintaining an accurate record of these concentrations over the life of a system provide a method for recognizing normal and abnormal conditions and actually predicting incipient failure modes. With such quantitative data it is even possible, in many instances, to predict which component is actually failing.

Procedures used to extract fluid samples from operating systems and analyze them for the presence of key elements have been well-developed and even standardized by many groups and organizations. Proton-Induced X-Ray Emission (PIXE) is an X-ray spectroscopic technique, which can be used for nondestructive, simultaneous analysis of all types of samples, such as powders, soil, solids, fluids, and aerosol filters. PIXE analysis can accurately assess particles up to 150 μm in size (Ref. 38).

The PIXE technique is based on physics, not chemistry. Beginning with pure hydrogen, the electron from the hydrogen atom is separated; then an accelerator drives the protons to high speeds. The resulting ultra clean proton beam is aimed at the target sample.

Within minutes of exposure to the beam, a computer produces data about the entire spectrum of inorganic elements in the target, not just about a single element. Because each element produces a unique characteristic X ray, the data

Downloaded from http://www.everyspec.com

PIXE produces can be likened to a fingerprint of the analyzed sample.

For fluid analysis PIXE provides a quantitative analysis that determines the composition of the wear debris or contaminants that exist. The resulting data include the following:

1. In situ detection limits for 72 elements (sodium through uranium)
2. Percentage of mass of detected elements
3. A bar graph for easy visual comparison of relative proportions.

Table 7-4 presents common sources of elements entrained in a fluid and identified by PIXE analysis.

The identification of chlorinated solvents is also necessary in some applications. Chlorine or fluorine has been, and without control continues to be, introduced into hydraulic systems during component cleaning (Refs. 17, 21, 22, and 23). Infrared analysis is a common technique used to identify chlorine or fluorine in the corrosion products from hydraulic components (Ref. 17), but gas chromatography is more sensitive.

TABLE 7-4. POSSIBLE SOURCES OF ELEMENTS IN OIL (Ref. 38)

1. Aluminum (Al)
   Pistons, bearings, busings, pump vanes, blower or turbocharger, washers, shims
2. Antimony (Sb)
   Babbit bearings, greases
3. Barium (Ba)
   New oils (dispersant and/or detergent), grease, water
4. Boron (B)
   New oils, coolant, seals, dust, fuel, dilution
5. Cadmium (Cd)
   Bearings, platings
6. Calcium (Ca)
   New oils (dispersant and/or detergent), water, grease
7. Chromium (Cr)
   Plated parts (primarily piston rings), antifriction bearings, shafts, gears, seals, bearing cages, gas turbines
8. Cobalt (Co)
   Bearings, turbine components
9. Copper (Cu)
   Bearings, bearing cushions, bushings, thrust washers, valves, guides, injector shields, oil cooler tubes, wet clutches, coolant (copper radiator), gears
10. Iron (Fe)
    Rings, crankshaft, cylinder walls, valve train, pistons, antifriction bearings, gear train, shafts, clutch plates, washers, rust, water
11. Lead (Pb)
    Babbit or copper-lead bearings, platings, leaded gear lubes, leaded gasoline, grease, paint, seals, solder
12. Magnesium (Mg)
    New oils (dispersant and/or detergent), bearings, superchargers, water
13. Manganese (Mn)
    Steels, shafts, valves, corrosion, blowers (exhaust and intake systems)
14. Molybdenum (Mo)
    Additives, piston rings, electric motors
15. Nickel (Ni)
    Shafts, valves, antifriction bearings, gears, rings, turbine components
16. Phosphorus (P)
    New oils (zinc dithiophosphate), chlorinated phosphorus antiwear additives, gears, coolant leaks
17. Silicon (Si)
    Sand, dirt, dust, antifoam, antifreeze, gasket sealing compounds
18. Silver (Ag)
    Antifriction bearings, silver solder, wrist pin bushings, gear teeth, shafts
19. Sodium (Na)
    Some new oils, coolant, saltwater, grease
20. Tin (Sn)
    Babbit bearings, platin, solder, coolers, wrist plus, pistons, rings
21. Titanium (Ti)
    Wear turbine engines, springs, valves, bearing hub, compressor discs, turbine blades
22. Vanadium (V)
    By-product heavy fuel oil, occasionally wear metal, turbine blades, valves
23. Zinc (Zn)
    Antioxidant, anticorrosive, antiwear agent, bearings, platings, gears, seals, coolant leaks, grease

Downloaded from http://www.everyspec.com

Identification of constituent compounds in oils or resultant corrosion products can also be done by various other methods. Among these are gas chromatography, spark source mass spectrometry, and energy dispersive X-ray scanning electron microscopy. The actual technique used for analysis depends upon the type and accuracy of data sought, but in all cases an individual who is familiar with the specific technique should be consulted for guidance.

7-2.4.6 Spectrometric (Spectrographic) Analysis

Spectrographic oil analysis is a common means of identifying the chemical analysis of wear particles in hydraulic fluids. This technique is performed by atomic absorption (ASTM D 4628 (Ref. 44)) or by the inductively coupled plasma (ICP) technique (ASTM D 4951 (Ref. 45)). A review of spectrographic oil analysis follows.

Oil analysis by means of spectroscopy dates back to the 1940s, when the railroad industry demonstrated the value of emission spectrographs for detecting wear particles in lubricating oils. When direct reading spectrometers were introduced, they were accepted almost universally. The validity and usefulness of such wear particle analysis depend on how representative the sample is and the size of the particles entrained.

It is generally accepted that spectrometric methods are blind to particles outside the range of 0.5 to 8 µm. Also an analysis cannot reflect the size or number of particles, but can relate parts per million. Emission spectroscopy and atomic absorption spectroscopy are both common in oil analysis because they can identify and measure the concentration of entrained elements.

Every spectrograph consists of three fundamental units: a slit, a dispersing element (prism or diffraction grating), and a camera or other recording device. Placement of a source of radiation—flame, arc, or spark—is aligned with the slit, which acts as a narrowing source that (after dispersion) is focused to give the spectral lines, images of the slit.

In the emission spectrograph direct light from the sample—excited by an arc or spark—is focused through an entrance slit in the spectrometer. This light, which penetrates the slit, falls on a grate, where it is dispersed and reflected. In the atomic absorption spectrograph dilution of the fluid sample with methyl isobutyl ketone is performed and the diluted sample is aspirated.

The actual process of atomization involves reducing the solution to a fine spray, dissolving, and finally vaporizing by means of a flame. The vaporization of the metal particles depends upon their residence time in the flame, flame temperature, and the gas composition of the flame. The spectrum results from the ability of atoms in the vapor state to absorb radiation at certain well-defined characteristic wavelengths.

The inductively coupled plasma technique and atomic absorption (AA) technique of spectrographic oil analysis for determination of wear metals are described. The reader should note that these techniques assess particles up to approximately 8 µm in size.

1. *Inductively Coupled Plasma*

Test Method. ASTM D 4951 (Ref. 45)

This test method is applicable for the determination of calcium, magnesium, and zinc from 0.001 to 1 mass %, of barium from 0.3 to 10 mass %, and of phosphorus from 0.01 to 1 mass % in new lubricating oils. Sulfur can be determined in the concentration range from 0.1 to 5 mass % in a similar manner for those instruments that can extend their working wavelength to 180 nm. These elements are contained in some additives used as detergents, antioxidants, antiwear agents, etc. This test method provides a means of determining the concentration of these elements, which gives an indication of the additive content in these oils.

A test specimen is weighed and then diluted with mixed xylenes or other suitable solvents on a weight-by-weight basis. Standards are prepared in the same manner. The solutions are introduced by using a peristaltic pump or free aspiration to an inductively coupled plasma atomic emission spectrometer (ICPAES), and elemental determinations are made by comparing standard and sample atomic emission intensities at wavelengths associated with the desired elements.

2. *Atomic Absorption*

Test Method. ASTM D 4628 (Ref. 44)

This test method is applicable for the determination of mass % barium from 0.005 to 1.0% and zinc, calcium, and magnesium from 0.002 to 0.3% in lubricating oils. These elements are contained in some additives that act as detergents, antioxidants, antiwear agents, etc. This test method provides a means of determining the concentration of these metals, which gives an indication of the additive content in these oils.

A sample is weighed and base oil is added to 0.25 g total weight. Fifty mL of kerosene solution containing potassium as an ionization suppressant are added, and the sample and oil are dissolved. (WARNING: Combustible—Vapor Harmful) Standards are similarly prepared by always adding oil if necessary to yield a total weight of 0.25 g. These solutions are burned in the flame of an atomic absorption spectrophotometer.

One of the largest scale military implementations of spectrographic oil analysis is through the Joint Oil Analysis Program (JOAP). The objective of the effort is "to improve operational readiness of equipment, promote safety, detect impending component failure, conserve lubricating and hydraulic oils through application of on-condition oil change, and provide a quality assurance (QA) tool for component repair and overhaul" (Ref. 46). This comprehensive approach is completely documented in the referenced regulation, and the reader is referred to this document for further information.

Downloaded from http://www.everyspec.com

7-3 CONTAMINANT EXCLUSION

Three fundamental modes exist that contribute to fluid-borne contaminations in a hydraulic system (Ref. 26). They are

1. *Injected.* Contaminant that is usually introduced during manufacturing or in the field during maintenance, repair, or overhaul operations

2. *Ingested.* Contaminant that is introduced from the environment through breathers, cylinders, seals, etc. Dust, air, water, and microorganisms are the most commonly ingested contaminants.

3. *Generated.* Contaminant that is caused by wear of tribological elements or results from conditions internal to the system, such as corrosion formation.

The source of the dominant contaminant type in a fluid sample is dependent upon system operating time, the ingression rate, and the capability of any *contaminant-exclusion* devices, such as filtered caps, breathers, and rod wiper seals. The dominant contaminant found within a system provides a good *indication of contaminant* source significance, i.e., internal system cleanliness, tribological wear modes, duty cycle severity, environmental harshness, and the effectiveness of exclusion devices.

The age, type, and condition of the machinery or equipment also affect the contaminant type and characteristic. New machinery will usually also have a preponderance of larger sized implanted particulate contaminant in addition to smaller contaminant, whereas well-worn systems will often show extremely high levels of small particulate solid contaminant. A catastrophically failed piece of equipment can have gross debris from related components or systems. Also nonparticulate contaminants may be present, such as water, and should be accounted for.

Significant gains can be made by excluding contaminants from a hydraulic system. If injected and ingested contaminants are minimized, they do not have to be removed by filtration and they do not promote or add to the level of generated contaminant. This twofold gain often justifies additional costs to clean components and systems and institution of new system cleanliness standards.

7-4 CONTAMINANT REMOVAL (FILTRATION)

A filter employs a mechanical means, i.e, a porous or permeable medium, to capture and retain insoluble, includes free air and water, but not dissolved contaminants in the fluid. In general, filters work on the basis of size but can be supplemented by adsorption, coalescence, magnetic field, etc., methods. Separators, however, isolate and remove contaminants of all types on the basis of their physical properties, such as differences in specific gravity, wetting characteristics, vapor pressure, magnetic properties, and electric charge, rather than solely on size. Filters and separators are expected to (Ref. 28)

1. Capture contaminants
2. Resist desorption under rated flow, surge, and terminal pressure conditions
3. Possess sufficient capacity to give an acceptable service life
4. Require minimal pressure loss
5. Possess compatibility with the service environment and duty cycle.

Filter assessment techniques involve complex tests that place stringent demands on cleanliness, parameter measurement, and process control.

The field of filtration is very large and Ref. 28 is recommended as a comprehensive source of the physics (process) of filtration. The following is a review of common filtration specifications. The descriptions that follow should help the hydraulic system designer choose application-specific filter assessments before making a final filter selection. Note that all tests will probably not be necessary for all applications, but that by performing a few key assessments, the chances of specifying the best filter will be maximized.

1. *Collapse or Burst Resistance*

Reference. ISO 2941 (Ref. 47)

As a filter captures and retains contaminants the differential pressure increases exponentially. If this pressure differential continues to increase unchecked, the element will finally burst or collapse, depending on the direction in which the fluid flows through the element, inside out or outside in. An element design must resist sufficiently high differential pressure to permit it to operate under contaminant loading, cold start-up, and surge flow conditions. Because a break in the filter medium can be disastrous for many system components, the collapse or burst resistance value should always exceed the expected maximum differential pressure level at the point of filter location.

2. *Material Compatibility*

Reference. ISO 2943 (Ref. 48)

Material used as filter media possesses various characteristics that can make it age rapidly under hot system fluid conditions, dissolve in the system fluid, or lose its structural shape by dissolution of the epoxy or glues holding the element together. Hence deterioration of the element fabrication material can take several forms: embrittlement, dissolution, and/or disintegration. Material compatibility is not a quality that an element can be assumed to possess because of various system configurations. Material compatibility is too critical to the system requiring protection; therefore, it should be verified.

3. *End Load Resistance*

Reference. ISO 3723 (Ref. 49)

Filter elements in service can experience excessive amounts of axial compression due to hydrostatic- and mechanical-type end loads. Thus the user must know the probability of the element surviving such treatment before finally selecting and installing a filter. The end load rating required for a given application depends on the filter hous-

Downloaded from http://www.everyspec.com

ing design and the method used to seal the element in place. End loads are considerably higher when surface gaskets are used to seal the element in the housing. Also a flow restriction between the element and the filter bowl can create hydrostatic end loads sufficiently high to crush the element.

4. *Flow Fatigue Resistance*
Reference. ISO 3724 (Ref. 50)

The Flow Fatigue Test is a cyclic flow endurance-type test that imposes variable stresses on the structure of the filter medium. The flexing required by this test is designed to simulate the pressure or flow fluctuations experienced by systems subjected to cold starts or a variable duty cycle. Elements destined for such dynamic machine system service must contain supporting material on both sides of the medium to minimize the displacement amplitude under cyclic conditions. Any failure in the medium can quickly lead to sizable cracks, breaks, and ruptures, which can jeopardize the entire contamination control balance of the system. The number of flow fatigue cycles an element should be expected to complete depends upon the system; however, a value of no less than 10,000 cycles should be a qualifying minimum for most steady flow applications. A value of 250,000 cycles or more is the order of magnitude for most return-line filter applications.

5. *Multipass (Beta) Filtration Test*
Reference. ISO 4572 (Ref. 51)

This internationally approved test was the first to receive industrial acceptance. It is recognized as the "granddaddy" of the "high tech" assessment methods; it uses the "filtration ratio" instead of "efficiency" as the figure of merit—in this case, the "beta ratio". The beta test assesses three fundamental aspects of filters: separability, contaminant capacity, and pressure loss. The test was designed for "fine" filters with beta values between 2 and 75 because it employs sample bottles and an external particle counter to determine particle separation. Fluid samples are extracted at the two-minute point and at various times corresponding to the following percentages of net pressure drop, which is the difference between terminal and clean element pressure drop: 2 min, 10%, 20%, 40%, and 80%. Air clean fine test dust is injected as a slurry throughout the test, and as the name of the test implies, contaminant not removed by the filter is multipassed until it reaches the terminal pressure of the filter. An extension of the beta test exists in the form of an in-line test and is called the "in-line beta" test. All other aspects of the two tests are the same, except that the upper limit of the in-line beta test has been extended another order of magnitude to 750 beta.

6. *Filter Pressure versus Flow Characteristics*
Reference. ISO 3968 (Ref. 52)

The D'Arcy equation states that the pressure drop across a filter medium increases with increasing flow rate, thickness or tortuosity of the media, fluid viscosity (or reduction in temperature), reduced filter area, and lower mean pore size of the medium. Of course, these pressure flow characteristics refer to a "clean" element and assembly. When a filter is becoming loaded with contaminant in service, the pressure drop increases to collapse or burst pressure. This procedure was designed to measure the resistance to flow through a filter due to kinetic and viscous effects. The pressure drop across the filter measures this resistance. This can be a particularly valuable test for determining filter element and bypass valve compatibility by extending the test to include the characteristics of the bypass valve as well as of the filter.

7. *Glass Bead Filter Sievability Test*
Reference. MIL-F-8815 (Ref. 53)

At one time filters were considered to be nothing more than sieves, i.e., a two-dimensional collection of discrete holes. This belief fostered the concept that, if the size of the holes in a filter medium is known, the size of the contaminant that can pass is also known. Based on this sievability criterion, a number of filter specifications were proposed during the 1950s and 1960s, when the use of wire cloth media was very popular. Some organizations persist in using the sievability criterion because of the long history of usage it possesses. In this test a single-pass, blowdown exposure of the test filter to a specified slurry containing a specified glass bead size distribution determines the degree of filtration. After processing the effluent fluid through a membrane, the particles passed by the test filter can be analyzed for the "largest hard spherical particle" or other rating schemes contained in the various so-called "absolute rating" specifications.

7-5 CHEMICAL AND BIOLOGICAL CONTAMINANTS

The contaminants that are chemical and biological (CB) agents have been formulated to kill or incapacitate human beings, i.e., they are antipersonnel substances. Such contaminants may be absorbed by certain materials, such as paints, lubricants, and fabrics, adsorbed on exposed surfaces, and retained in crevices, seams, concavities, and even horizontal surfaces. They may also be absorbed or adsorbed by dust, mud, or vegetation, which may adhere to equipment surfaces. They can be transferred to personnel by direct contact and through vaporization and subsequent inhalation, ingestion, or infusion. Furthermore, some agents, if absorbed into a material, may slowly desorb over an extended time and thus constitute a vapor and contact hazard of long duration.

7-5.1 SOURCE OF CONTAMINATION

Contamination, within the context of this handbook, means that CB agents adhere to or enter a piece of equipment or a vehicle. Contamination may result from a direct attack by chemical and/or biological weapons, or it may result from exposure to a wind-carried agent from another area or from moving over ground or vegetation that has

Downloaded from http://www.everyspec.com

been contaminated. Regardless of the cause, the result is the same. Terrain and/or equipment are contaminated and, in turn, become potential sources of contamination to personnel in the area.

7-5.1.1 Chemical

Chemical contaminants (agents) are synthesized chemicals. Although thousands of chemical agent candidates have been designed and tested for military use, only a few of them have been found to be of practical military value. Some of the criteria used in the selection of suitable agents are

1. Low cost
2. Toxicity in extremely small concentrations
3. Toxicity through various routes of entry into the body
4. Long-term storage stability
5. Time required for onset of symptoms and duration of effect
6. Care of dissemination in practical munitions. (Ref. 54)

Chemical contaminants or agents can be classified according to their chemical structure, physical and chemical properties, and mode of action as nerve, choking, blood, blister, incapacitation, vomiting, and riot control agents. They also can be classified as persistent or nonpersistent depending on the length of time they remain on surfaces. They affect primarily the lungs, the eyes, and/or the skin; they may cause long-term health hazards or may only incapacitate for a few minutes. The severity of the effect depends upon the concentration of the agent, the toxicity of the agent, the amount transferred to a person, and the physical condition of the person exposed (Refs. 54 and 55).

7-5.1.2 Biological

Biological contaminants can be broadly categorized as disease- or illness-causing agents. They are living organisms and include bacteria, fungi, protozoa, rickettsia, and viruses. Transfer can be by inhalation, ingestion, or through a break in the skin. Their effects can range from mild incapacitation to death, depending to a large degree upon the physical condition of the exposed person and the specific type, strain, and viability of the agent.

The major problem with such agents is that they may survive for a long period of time if environmental conditions are favorable. If trapped in secluded or isolated areas that normally would not represent exposure hazards to personnel, they may be uncovered at a later time and contaminate maintenance personnel. The problem is complicated by the fact that the hazardous dose varies widely, depending upon the specific biological agent, and by the danger that the agent or its disease may be transferred from one infected person to another (Ref. 56).

7-5.2 TYPES OF CONTAMINATION

7-5.2.1 Chemical Agents

Chemical agents can be classified according to their modes of action as blister, nerve, blood, choking, and incapacitating. A brief discussion of each of these groups follows. For additional detail, see Ref. 55.

Blister agents mainly attack the skin and eyes through absorption and the respiratory system though inhalation. The effects of blister agents on skin range from itching, inflammation, and burning to the formation of large water-filled blisters (ulceration), depending on the degree of exposure.

Nerve agents in vapor or aerosol form can be inhaled, and in liquid form they can enter the body through the eyes or by skin absorption. Also poisoning can occur by ingesting food or water contaminated with nerve agents. The route of entry is important with regard to the time required for the onset of symptoms. Onset is more rapid when nerve agents are inhaled. The degree of poisoning is dependent on the concentration of the agent inhaled. The initial symptoms of nerve agent poisoning include irritation of the eyes, contraction of the pupils, and deterioration of vision. The follow-on symptoms are headache, increased production of saliva, a runny nose, tightness of the chest, and difficulty breathing.

Blood agents attack victims via the respiratory system. Because blood agents must be inhaled to be effective, they are typically delivered in vapor or aerosol form. Inhalation of a low dose of blood agents causes a feeling of weakness, giddiness, headache, confusion, nausea, and sometimes vomiting and rapid breathing. These symptoms can be followed by either a decrease in respiration frequency (apnea) or by panting and finally by coma or death. Inhalation of a high dose of blood agents causes a rapid onset of this same sequence of symptoms. The victims can collapse and die within minutes of exposure.

Choking agents irritate the eyes and attack the respiratory system, i.e., the throat, respiratory tract, and lungs. There have been no reports of poisoning resulting from choking agents introduced via skin absorption or ingestion. Because choking agents affect mainly the respiratory system, they are delivered in either vapor or aerosol form. The symptoms of choking agent poisoning include coughing (sometimes with bloody phlegm), choking, tightness of the chest, shallow breathing, and pulmonary edema. Chlorine gas and phosgene are classified as choking agents.

Incapacitating agents enter the body via ingestion or inhalation. The most common type of incapacitating agent is quinuclidinyl benzilate (BZ). The initial symptoms of BZ poisoning usually appear two to four hours after exposure. Symptoms include deterioration of close-range vision, dryness of the mouth, and palpitation of the heart. The skin becomes dry, the face shows a marked reddish hue, and skin temperature rises. After three to six hours, the central nervous system is affected. A loss of balance and difficulties

Downloaded from http://www.everyspec.com

coordinating various muscular movements occur. The immediate memory deteriorates considerably and the victim becomes confused as to time and space.

7-5.2.2 Biological Agents

Two categories of biological agents are microorganisms and toxins. Microorganisms are small, usually single-cell life forms that infect the host and cause sickness and death by attacking a critical organ of the body. Microbial agents include bacteria, viruses, rickettsia, and fungi. Toxins are complex natural chemical products of living organisms including microorganisms, animals, and plants. Toxins are chemical in the sense that they do not reproduce themselves and have no infective properties. Because of their biological origin, however, toxins are classified as biological agents. They can enter the body through the respiratory tract, lesions on the skin, by ingestion, or even by absorption directly through the skin. The extent of the effects depends upon the dosage. There may be accumulative effects from some toxins.

7-5.3 EFFECT OF CONTAMINATION

The hazards that result from chemical attack are usually categorized as liquid, vapor, or aerosol. Liquid hazards result primarily from persistent agents disseminated by aerial techniques. These techniques, sometimes called "rain" dissemination techniques, include the use of spray tanks or missiles and bombs, which release their chemical payloads before impact. The liquid droplets that are formed upon release fall to earth with little vaporization and persist for an extended time. Liquid droplets are more persistent than vapors or aerosols. Depending on the type of agent and atmospheric conditions, liquid agents may persist for days or weeks. Liquid droplets produce both secondary vapor, i.e., vaporization after falling to earth, and contact hazards.

Some liquid agents damage and degrade equipment and systems. In severe cases the agents may deteriorate systems to a malfunctioning level. Liquid agents, if deposited onto porous material surfaces, can be absorbed into the material matrix and make decontamination difficult. Thus the contaminated equipment and systems not only become difficult to handle due to potential contact hazards but also may later desorb agents and cause a vapor hazard for an extended time. A vapor hazard is a particular threat in a warm environment. In addition, the contaminated vehicles, tanks, and other equipment may spread contamination to other areas if not properly decontaminated.

The most severe vapor and aerosol hazards result from the use of nonpersistent agents. These agents vaporize rapidly upon dissemination and disperse over large areas. Agent vapors, especially if highly concentrated, can also be absorbed into material matrices. Desorption of adsorbed agents may later produce prolonged residual vapor hazards. The desorbed agents may be more hazardous to personnel than traditionally believed because after several hours of combat, soldiers, who are unaware of agent desorption, may take off cumbersome protective gear and thus directly expose themselves to the toxic vapors.

Biological agents can be disseminated in aerosol, liquid, or solid form. Such agents generally affect only living organisms and do not damage or degrade material quality.

7-5.4 METHODS OF DETERMINING CONTAMINANT

The rapid and accurate identification of chemical agents is essential for initiation of countermeasures and decontamination. The equipment necessary to detect and monitor biological agents is limited in both quantity and quality. Equipment is available to detect the presence of chemical agents in vapor and liquid form. Although these kits are not designed to detect chemical agents in hydraulic fluids, they will detect the presence of agents on and around containers of fluid. Descriptions of the various chemical detection means are given in MIL-HDBK-783(EA) (Ref. 55).

7-5.5 DECONTAMINATION

A decontaminant can be defined as a substance whose purpose is to detoxify, physically remove, seal, or otherwise make harmless a contaminant. Although these substances effectively neutralize or remove contaminants, some of them have adverse chemical or physical effects on the materials to which they are applied. The reasons for decontamination are the following:

1. Prevent or reduce fatalities and incapacitation
2. Reduce performance degradation caused by the burden of necessary protective measures
3. Compensate for the limitations of protective equipment and
4. Avoid the spread of contamination (Ref. 57).

7-5.5.1 Methods

In general, CB agent decontamination methods can be classified into three broad categories of biological, chemical, and physical processes. Biological decontamination processes are methods such as cell-free enzymatic systems, microorganisms, algae, and state-of-the-art genetic engineering. These methods have been cited in the literature in regard to their potential use as chemical and biological agent decontaminants (Ref. 58). Biological methods for agent decontamination may hold promise for future use; however, they are not sufficiently developed for realistic application at this time. Physical and chemical methods of decontamination are used. The relationship between the primary CB agents and the chemical and physical decontamination methods is given in Table 7-5 (Ref. 55).

Chemical and biological decontamination methods involve chemical processes for agent removal, neutralization, or destruction. In chemical methods the agent under-

Downloaded from http://www.everyspec.com

TABLE 7-5. CHEMICAL AND PHYSICAL METHODS FOR DECONTAMINATING CB AGENTS (Ref. 55)

METHOD	DECONTAMINANT	EFFECT OF DECONTAMINANT ON CB AGENT						
		H-Series	Lewisite	G-Series	V-Series	Toxins	Spores	Organisms
Chemical	DS2 (STD)	*	*	*	*	*	0	*
	STB (STD)	*	*	*	*	*	*	*
	Household Bleach	*	*	*	*	*	*	*
	HTH	*	*	*	*	*	*	*
	ASH/SLASH	*	*	*	*	*	*	*
	Mask-Sanitizing Solution (STD)	*	*	*	*	*	0	*
	Sodium Hydroxide	?	?	*	*	?	*	*
	Sodium Carbonate	?	?	*	?	?	?	?
	Hexachloromelamine	*	*	?	?	?	?	?
	Ammonium Hydroxide	*	*	*	*	?	?	?
	Chloramine-B or -T	*	*	*	*	0	0	0
	Dichloramine-B or -T	*	*	*	*	?	?	?
	XXCC3	*	*	*	*	?	?	?
	C8 Emulsion (STD)	*	*	*	*	*	*	*
	CD-1	*	*	*	*	?	?	?
	Perborate Solution	?	?	*	*	?	?	?
	Incineration	*	*	*	*	*	*	*
	Weathering	*	*	*	*	?	?	?
	Soap Solution	*	*	*	*	*	*	*
	Iodine	?	?	?	?	?	?	*
	Formalin	?	?	?	?	?	*	*
	Detrochlorite	?	?	?	?	*	*	*
	Peracetic Acid (PAA)	?	?	?	?	?	*	*
	Ethylene Oxide (ETO)	?	?	?	?	*	*	*
	Carboxide	?	?	?	?	?	*	*
	Hyamines	?	?	?	?	?	?	?
	Chlorine Dioxide Solution	?	?	?	?	?	*	?
Physical	Hot Water	*	*	*	*	*	*	*
	Steam	*	*	*	*	?	?	?
	Organic Solvents	*	*	*	*	*	*	*
	Dry Heat	*	*	*	*	?	0	?
	Dry Sorbents	*	*	*	*	?	?	?

KEY: * = has some decontamination effect; 0 = not effective; ? = effectiveness not known.

goes a reaction that alters its chemical nature. Oxidation and hydrolysis are two primary chemical reactions used to decontaminate chemical agents and toxins because the chemical nature of these molecules makes them susceptible to oxidative and hydrolytic attacks. Oxidation, chlorination, and reduction are the primary chemical reactions that have successfully destroyed microorganisms.

In general, the stronger the oxidizing power of a chemical, the faster the reaction rate between that chemical and agent. The hydrolysis rate has more variables involved and is dependent upon the chemical structures of the decontaminant and agent and on reaction conditions such as pH, temperature, solvent, and catalysis. The hydrolysis rate increases sharply at a pH above 8. Under alkaline conditions the reaction rate is proportional to the concentration of hydroxide ions. The reaction rate usually increases tenfold with each additional pH unit. Temperature also influences these rates.

Three types of chemical methods have been studied extensively for application to chemical agent decontamination. These methods are chemical reactants, incineration, and weathering. The chemical reactants currently in the military inventory are given in Table 7-5 (Ref. 55).

Incineration is a process of thermal oxidation, i.e., burning or combustion of materials in an excess of air and at very high temperatures of 400 to 1200°C (752 to 2192°F)

Downloaded from http://www.everyspec.com

under tightly controlled gas-flow conditions. Toxic agents can be thermally decomposed by incineration with no foreseeable toxic end products (Ref. 59).

Weathering is an important decontamination procedure and may be the method of choice if time limitations are not a factor. Both chemical and physical decontamination processes are operating during weathering. The chemical processes of weathering cause degradation of chemical agents by hydrolysis, oxidation, and photodecomposition. Physical weathering includes thermal evaporation and aeration.

Physical decontamination methods are those by which the CB agent undergoes a change in its physical state. These methods include thermal decomposition, separation by osmotic pressure, and sorption processes. Because physical methods involve a change of physical state rather than any chemical changes, physical decontamination alone generally does not destroy CB agents. The agent hazard may be removed from the contaminated surface, but the chemical nature of the CB agent remains unchanged. Some physical methods, however, also promote chemical reactions that destroy the agent. Physical decontamination methods are divided into aqueous and nonaqueous approaches. This division was made because most military equipment can be grouped into water-sensitive equipment and water-resistant equipment.

Aqueous approaches to physical decontamination of CB agents involve the use of equipment and water to remove CB agents by both mechanical force, i.e., pressurized aqueous solutions are used, and solubilization. Aqueous approaches have the added benefit that they include chemical decontamination processes for those CB agents that are subject to hydrolysis. Hot water and steam are the two fielded aqueous decontamination methods.

Nonaqueous approaches to physical decontamination, i.e., physical processes that use no water, can be grouped in four principal categories. These categories are

1. Organic solvents
2. Dry heat
3. Weathering
4. Dry sorbents.

7-5.5.2 Container Design to Enhance Decontamination

Container design cannot be based upon the probable use of any single decontaminant because of the lack of a universal decontaminant and because it is impossible to predict the type or category of agent that will be encountered. Designers must be aware of the nature and properties of the range of decontaminants that may have to be used, and they should consider these factors when practical, especially when selecting materials (Ref. 60). Prime among the determining factors are

1. The properties of the agent
2. The initial contamination density of the agent on the container
3. The environmental conditions
4. The sorptive properties of the container
5. The physical features of the container.

Design is important because proper design can reduce the amount of contaminants remaining on the container. Design can also affect the interaction of the environment with the agent. Three design considerations should be considered in order to reach a practical and safe compromise. These considerations are material/coating selection, design configuration, and contamination avoidance.

Decontaminability of the container can be improved by selecting the correct materials and coatings. Some materials can be difficult or impossible to decontaminate. Thus the ease of decontamination should increase with selection of a material that does not absorb the contaminants. The decontamination process is much easier because the contaminants can be washed off or easily broken down into nontoxic components (Ref. 61). The selection of a suitable coating should also be used to simply decontamination. Containers that must be made of materials that absorb and trap contaminants should be coated with a nonabsorbing material to make them easy to decontaminate.

It is essential that any equipment item be easy to decontaminate, and configuration design techniques should be used to accomplish this goal. First, a design should be selected that reduces the accessibility of contaminants to the components. Second, each component that is accessible to contaminants should be made as smooth and uniform as possible. Rough surfaces on castings and similar components should be eliminated. Third, the interfaces between parts should be designed to eliminate cracks and traps for contaminants. The spaces between components should be small enough to be sealed or large enough to allow decontamination between them (Ref. 60).

Many components of military equipment cannot be (1) designed to eliminate areas in which contaminants can collect, (2) made out of nonsensitive materials, or (3) coated so that decontamination efficiency is enhanced. If possible, such items should be enclosed by a protective structure to eliminate the threat hazard and subsequent decontamination. Additional protection can be provided to such items by using contamination avoidance covers (CACs).

7-5.5.3 Effects of Decontaminants

Decontaminants are substances that remove, absorb, or detoxify CB agents. They include liquids, slurries, and powders. No one decontaminant is entirely effective against all CB agents, and some decontaminants are more effective against some agents than against others.

7-5.5.3.1 On Containers

In recent years, much attention has been given to the effects of the CB contaminants, or agents, and their associated decontaminants on materials used to construct military

Downloaded from http://www.everyspec.com

systems and equipment items, e.g., containers. When the effects of CB agents and decontaminants upon materials are examined, it is important to focus upon the function of that material or the component and/or subsystem that the material is used to construct. Once a function has been established, the properties of the material critical to performing that function can be determined. Testing can then be performed to determine the effects of exposure to CB agents and decontaminants upon critical properties.

Chemical decontaminants are, in general, corrosive and either acidic or caustic. Because of their reactive nature, they can deteriorate and adversely affect the container, equipment and/or surfaces they are intended to clean. For example, decontaminating solution No. 2 (DS2) has adverse effects on several polymeric materials, such as elastomers, adhesives, plastics, and coatings. Generally, metals are not adversely affected by DS2.

7-5.5.3.2 On Hydraulic Fluids

Documented cases of the effects of specific decontaminants on hydraulic fluids have not been reported. Much of the general information regarding decontaminant effects on containers can be applied to hydraulic fluids.

This area certainly requires additional investigation, but it can be stated without reservation that any materials used for decontamination should be restricted from contact with hydraulic fluids. One such situation is the use of a soap-and-water-base cleaning solution.

7-6 PRECAUTIONS

Exercising certain precautions in the storage and handling of hydraulic fluids is vital to the safety of personnel and to the protection of the fluid. The introduction of contaminants into hydraulic fluids and contact of the fluid with incompatible materials are both to be avoided. However, hazards to personnel from explosion, fire, skin poisoning, ingestive poisoning, and vapor inhalation are of even more concern. Anyone who stores and handles hydraulic fluids should fully understand the hazards he faces and follow all recommended safety precautions.

7-6.1 HEALTH HAZARD

Skin poisoning, ingestive poisoning, and exposure to vapors and sprays of hydraulic fluids are common threats to hydraulic fluid handlers. Other dangers are due to the explosive or highly flammable nature of some liquids. Most hydraulic fluids, however, do not pose a serious health hazard. For specific information on the hazardous nature of a particular fluid, the fluid manufacturer should be consulted.

7-6.1.1 Precautions Against Poisoning

Two easily avoided hazards of handling hydraulic fluids are skin poisoning and ingestive poisoning. Skin poisoning is the irritation caused by repeated handling of a hydraulic fluid, and ingestive poisoning is caused by accidental swallowing of a hydraulic fluid. Although swallowing of a hydraulic fluid is very rare, poisonous hydraulic fluids should be clearly marked. First aid procedures should be ascertained from the manufacturer's data or from cautionary information located on the fluid container. Two very common hydraulic fluids, MIL-H-83282 and MIL-H-5606, did not cause death when administered orally or dermally to laboratory animals. MIL-H-5606 was determined to be a moderate skin irritant (Ref. 62). Although most hydraulic fluids, including synthetics, are not harmful to bare skin, prolonged contact should be avoided because many of the ingredients and additives may tend to dry out the skin. This effect is not long lasting if the exposure is not prolonged.

7-6.1.2 Precautions Against Dangerous Vapors and Sprays

Vapors and mists from many hydraulic fluids are generally irritating and cause coughing or sneezing. For these reasons prolonged inhalation of hydraulic fluid vapors or sprays is to be avoided. Even when the effects of short exposures are known to be nontoxic, indirect damage to the respiratory system could occur because of frequent or repeated irritation. Vapors from hydraulic fluids are most irritating when the fluids are at high temperatures because the fluids may decompose and give off toxic vapors. Then and at all times vapors from hydraulic fluids should be avoided by working in well-ventilated areas or by wearing protective masks.

Breathing the gaseous emissions of heated hydraulic fluids may be hazardous. This is especially true in confined spaces in which fumes cannot readily escape, e.g., in ships, submarines, and tanks (Ref. 63).

7-6.1.3 Precautions Against Carcinogens and Neurotoxins

Carcinogens are those agents which cause or incite cancer growth in organic tissue. Cancer growth may begin long after exposure to a carcinogenic agent. This delayed growth makes singling out a hydraulic fluid as the cause very difficult. Thus hydraulic fluids containing additive chemicals known to have carcinogenic potential should be clearly marked. Since some forms of skin cancer may result from prolonged exposure to otherwise harmless chemicals, exposure should be avoided.

Neurotoxins are poisons that affect the nervous system. A primary neurotoxin found in many hydraulic fluids in varying amounts is tricresyl phosphate (TCP). Although the amount of this compound is not limited in the military specifications, the ratio of the orthoisomer, triorthocresyl phosphate (TOCP), is limited to 1% of the total TCP used. Many organophosphorus compounds have been found to cause delayed neurotoxic effects in man (Ref. 64). Similar effects were demonstrated in laboratory animals after exposure to

Downloaded from http://www.everyspec.com

TOCP by Beresford and Glees in 1963 (Ref. 65).

When tested for toxicity on laboratory animals, MIL-H-5606 and MIL-H-83282 hydraulic fluids demonstrated no neurotoxic effects. The results of this test indicate that neither fluid should pose any hazard to workers during production or use (Ref. 65). However, more recent studies indicate problems with inhalation and exposure (Ref. 66). Phosphate-ester-base fluids containing alkyl and aryl phosphates should be thoroughly investigated for dangerous levels of neurotoxins before use in a hydraulic system that may expose personnel to the fluid.

7-6.2 DANGER OF EXPLOSION AND FIRE

Danger due to explosion of hydraulic fluids is possible during storage, handling, or use in a hydraulic system. The "explosive limits" of a substance are the lowest and highest concentrations of the vapors of the substance in the atmosphere that will form a flammable mixture (Ref. 63). Hydraulic fluids should not be stored where the temperature may become high enough to ignite them. A common precaution that should be taken is to store the hydraulic fluid in an area removed from all possible sources of ignition and from areas in which personnel or equipment would be endangered should the stored liquids be accidentally ignited.

Fire and explosion precautions are even more important in direct handling of hydraulic fluids. Pouring or draining of fluids near sources of ignition, such as direct flames or hot surfaces, is inviting disaster. Even fire-resistant fluids can ignite and continue to support flame if conditions are favorable; however, nonflammable hydraulic fluids cannot.

Serious fire hazards can occur when a liquid is in use in a hydraulic system. Because of the high pressure in components of the system, if the system fails, i.e., broken hose, line, or coupling, flammable hydraulic fluids can spray system components and surroundings that may be hot enough to cause ignition. If the liquid is conducting, the spray can also cause short circuits in electrical systems, which, in turn, can cause ignition. Precautions against this sort of fire hazard are the responsibility of the system designer. If possible, the probable points of system failure should be situated so that, should a leak occur, the hydraulic spray will not be exposed to potential ignition sources.

7-6.3 CONTAINER DISPOSAL

The disposal of all containers must be done in accordance with the disposal requirements for the fluid that the container holds. That is, if a flammable or hazardous material container contains residual liquid, the container must be disposed of by an approved hazardous material disposal unit. A fluids material safety data sheet (MSDS), which is supplied by the fluid manufacturer and must be available to all personnel using the fluid, designates whether a fluid is flammable or hazardous and lists the necessary precautions to follow when handling the fluid and disposal of the container.

7-6.4 OTHER PRECAUTIONS

The US Army has established a CB defense program to reduce the threat posed by CB agent contamination. The program focuses on the following:

1. Protection (individual, collective, and equipment and supplies)
2. Detection (identification, monitoring, and warning)
3. Contamination control (contamination avoidance and decontamination).

The overall objective of this program is to prevent CB hazards or to reduce their effects.

Protection generally can be divided into three categories: individual, collective, and military equipment and supply protection. The purpose of individual protection is to protect personnel against CB hazards and allow them to perform their mission without interruption. The individual protective equipment (IPE) of the US Army includes masks, hoods, clothing, gloves, and footwear. Collective protection provides an agent-free environment so a group of personnel can carry out a tactical mission without the burden of wearing IPE. Collective protection also provides a clean area in which personnel can rest, eat, drink, and sleep until they must exit to perform essential tasks outside the protective enclosure. Equipment and supplies, e.g., food, water, and ammunition, must be protected from contamination before a CB attack.

Chemical agent detection, identification, and warning (CDIW) are vital to an integrated CB defense program and provide the necessary information on the types and levels of agents in a CB environment. This information is important to commanders and personnel in the area so the proper countermeasures can be taken to prevent and/or minimize CB hazards. (See subpar. 7-5.4.)

Contamination control is a precautionary action taken before or after CB attack in order to prevent or minimize the effects of CB hazards. These actions include protecting as well as isolating personnel and equipment from the CB environment. Protection is implemented before a CB attack and involves protection of personnel and covering or coating of equipment and supplies. Protection prevents personnel and military items from being contaminated if a CB attack should occur. Isolation entails marking contaminated areas and restricting personnel and equipment from these areas until the level of contamination no longer poses a threat.

One of the most effective means of protection from unknown or undefined threats posed by hydraulic fluids is to obtain and study a fluids material safety data sheet. An MSDS is produced by the fluids manufacturer, is required by law to be supplied to all individuals who come in contact with the fluid, and is the source of information about the

Downloaded from http://www.everyspec.com

harmful effects of a fluid. An MSDS sheet should be used to determine the proper handling procedure for a fluid, the protective clothing necessary when handling the fluid (if necessary), how to and how not to dispose of the fluid, limits of exposure to the fluid, and a host of other related items, which usually include the telephone number of the fluid manufacturer.

REFERENCES

1. PPP-C-96D, *Cans, Metals, 28 Gage and Lighter*, 2 August 1976.
2. PPP-D-729E, *Drums, Shipping and Storage, Steel, 55-Gallon, (208 Liters)*, 30 December 1983.
3. PPP-P-704E, *Pails, Metal: Shipping, Steel, 1 Through 12 Gallons*, 20 February 1987.
4. TT-E-515A, *Enamel, Alkyd, Lusterless, Quick-Drying*, 14 August 1972.
5. MIL-STD-290E, *Packaging of Petroleum and Related Products*, 1 August 1985.
6. MIL-H-5606F, *Hydraulic Fluid, Petroleum Base: Aircraft, Missile, and Ordnance*, 26 August 1991.
7. Federal Test Method Standard No. 3465, "Storage Stability Test of Fluids and Lubricants", Federal Method Standard No. 791C, *Method Testing Lubricants, Liquid Fuels, and Related Products*, 30 September 1986.
8. A-A-208A, *Ink, Marking, Stencil, Opaque, (Porous and Nonporous Surfaces)*, 9 November 1989.
9. TT-L-20A, *Lacquer, Camouflage*, 25 April 1967.
10. TT-E-489H, *Enamel, Alkyd, Gloss (For Exterior and Interior Surfaces) Low VOC Content*, 22 August 1988.
11. MIL-H-27601A, *Hydraulic Fluid, Petroleum Base, High Temperature, Flight Vehicle*, 20 January 1989.
12. F. Don Norvelle, *An Introduction to Fluid Power*, West Publishing Company, St. Paul, MN, 1991.
13. Larry C. Moore, "The Cleanliness of New Hydraulic Fluids", Basic Fluid Power Research Journal **11**, The Fluid Power Research Center, Oklahoma State University, Stillwater, OK (October 1977).
14. SAE J 1195-86, *Cylinder Rod Wiper Seal Ingression Test, Recommended Practice*, Society of Automotive Engineers, Warrendale, PA, 1986.
15. SAE J 1227-79, *Assessing Cleanliness of Hydraulic Fluid Power Components and Systems*, Society of Automotive Engineers, Warrendale, PA, 1979.
16. T. N. Deane, "The Effect of Contamination on Fluids and the Effect of the Ingredients of the Fluids on Contamination", *Proceedings of Aerospace Fluid Power Systems and Equipment Conference*, Society of Automotive Engineers, Warrendale, PA, 1965.
17. I. T. Hong and J. G. Eleftherakis, "Infrared Analysis: Part 2—Identification of Corrosion Product in Hydraulic Fluids", Fire-Resistant Hydraulics Journal **6**, 111-4, Oklahoma State University, Stillwater, OK, 1986.
18. MIL-STD-1246B, *Product Cleanliness Levels and Contamination Control Program*, 4 September 1987.
19. NAS 1638-64 (R 1981), *Cleanliness Requirements of Parts Used in Hydraulic Systems*, National Aerospace Standards, Aerospace Industries Association of American, Incorporated, Washington, DC.
20. ISO 4402-77, *Hydraulic Fluid Power—Calibration of Liquid Automatic Particle Count Instruments—Method Using Air Cleaner Fine Test Dust Contaminant*, International Organization for Standardization, Stockholm, Sweden, 1977.
21. L. C. Lipp, "Halogenated Solvent-Induced Corrosion in Hydraulic Systems", Lubrication Engineering **35**, 2, 72-9 (February 1979).
22. R. J. Cappell, "Failure From Corrosion of Hydraulic Actuators", *Material Protection*, 30-5 (1962).
23. Carl E. Snyder, Jr., *et al.*, "Investigation of Air Force MIL-H-5606 Hydraulic System Malfunctions Induced by Chlorinated Solvent Contamination", Lubrication Engineering **37**, 457-61 (August 1981).
24. AIR 4713, *Aerospace-Chlorinated Solvent Contamination of MIL-H-5606/MIL-H-83282 Vehicle Hydraulic Systems*, Aerospace Information Report, Society of Automotive Engineers, Warrendale, PA, August 1992.
25. S. A. London, "Microbial Activity in Air Force Jet Fuel Systems", Developments in Industrial Microbiology **6**, 61-9 (1964).
26. John G. Eleftherakis, "Contaminant Sensitivity Assessment of Electrohydraulic Valves", Paper No. 891867, *SAE Technical Paper Series*, Society of Automotive Engineers, Warrendale, PA, 1989.
27. A. Goldsmith, "Fluid Power Systems Reliability Second Sight Design", Thermal Control Systems, Ltd, London, England (April 1984).
28. "The Basic Fluid Power Research Journal" **20**, The Fluid Power Research Center, Oklahoma State University, Stillwater, OK, October 1987. (Note: All sections of this journal are dedicated to component contaminant sensitivity.)
29. ISO 4406-87, *Hydraulic Fluid Power—Fluids—Method for Coding Level of Contamination by Solid Particles*, International Organization for Standardization, Stockholm, Sweden, 1987.
30. SAE ARP 598B-86, *Determination of Particulate Contamination in Liquids by the Particle Count Method*, Society of Automotive Engineers, Warrendale, PA, 1986.
31. ASTM F 312-69, *Method for Microscopical Sizing and Counting Particles From Aerospace Fluids on Membrane Filters*, American Society for Testing and Materials, Philadelphia, PA, 1969.

Downloaded from http://www.everyspec.com

32. ANSI B 93.28M-73 (R1987), *Method for Calibration of Liquid Automatic Particle Counters Using "AC" Fine Dust Test*, American National Standards Institute, New York, NY, 1973.

33. Defense Standard 05-42, *Particle Contamination Classes for Fluids in Hydraulic Systems*, Ministry of Defense, United Kingdom, 1976.

34. Defense Standard 05-43, *Standard Procedures for Taking Samples of Hydraulic Fluids for Evaluation of Particulate Contamination*, Ministry of Defense, United Kingdom, 1976.

35. Defense Standard 05-44, *Comparison Slide Method for Assessing the Particulate Contamination Class of Hydraulic System Fluid*, Ministry of Defense, United Kingdom, 1977.

36. SAE ARP 785-63, *Procedure for the Determination of Particulate Contamination in Hydraulic Fluids by the Control Filter Gravimetric Procedure*, Society of Automotive Engineers, Warrendale, PA, 1983.

37. ISO 4405, *Hydraulic Fluid Power—Fluid Contamination—Determination of Particulate Contamination by the Gravimetric Method*, International Organization for Standardization, Stockholm, Sweden, 1991.

38. John G. Eleftherakis, "Accurate Analysis and Description of Field-Induced and -Generated Contaminants", Paper No. 901678, *SAE Technical Paper Series*, Society of Automotive Engineers, Warrendale, PA, September 1990.

39. *Air Cleaner Fine Test Dust*, Powder Technologies, Inc., Burnsville, MN.

40. Federal Test Method 3001.8, "Water in Petroleum and Other Bituminous Materials", Federal Test Method Standard No. 791C, *Methods of Testing Lubricants, Liquid Fuels, and Related Products*, 30 September 1986.

41. ASTM D 95-83, *Standard Test Method for Water in Petroleum Products and Bituminous Materials by Distillation*, American Society for Testing and Materials, Philadelphia, PA, 25 March 1983.

42. Federal Test Method 3253.1, "Water in Liquid Petroleum Products by Karl Fischer Reagent", Federal Test Method Standard No. 791C, *Methods of Testing Lubricants, Liquid Fuels, and Related Products*, 30 September 1986.

43. ASTM D 1744-83, *Standard Test Method of Water in Liquid Petroleum Products by Karl Fischer Reagent*, American Society for Testing and Materials, Philadelphia, PA, 28 November 1983.

44. ASTM D 4628-86, *Standard Test Method for Analysis of Barium, Calcium, Magnesium, and Zinc in Unused Lubricating Oils by Atomic Absorption Spectrometry*, American Society for Testing and Materials, Philadelphia, PA, 31 October 1986.

45. ASTM D 4951-89, *Standard Test Method for Determination of Additive Elements in Lubricating Oils by Inductively Coupled Plasma Atomic Emission Spectrometry*, American Society for Testing and Materials, Philadelphia, PA, 26 May 1989.

46. Joint Regulation AFR400-68/AR700-132/OPNAVINST 4731.1A, *Joint Oil Analysis Program*, Departments of the Air Force, Army, and Navy, US Naval Publications Office, Philadelphia, PA, 5 December 1990.

47. ISO 2941-74, *Hydraulic Fluid Power—Filter Elements—Verification of Collapse/Burst Resistance*, International Organization for Standardization, Stockholm, Sweden, 1974.

48. ISO 2943-74, *Hydraulic Fluid Power—Filter Elements—Verification of Material Compatibility With Fluids*, International Organization for Standardization, Stockholm, Sweden, 1974.

49. ISO 3723-76, *Hydraulic Fluid Power—Filter Elements—Method for End Load Test*, International Organization for Standardization, Stockholm, Sweden, 1976.

50. ISO 3724-76, *Hydraulic Fluid Power—Filter Elements—Verification of Flow Fatigue Characteristics*, International Organization for Standardization, Stockholm, Sweden, 1976.

51. ISO 4572-81, *Hydraulic Fluid Power—Filters—Multipass Method for Evaluating Filtration Performance*, International Organization for Standardization, Stockholm, Sweden, 1981.

52. ISO 3968-81, *Hydraulic Fluid Power—Filters—Evaluation of Pressure Drop versus Flow Characteristics*, International Organization for Standardization, Stockholm, Sweden, 1981.

53. MIL-F-8815D, *General Specification for Filter and Filter Elements, Fluid Pressure, Hydraulic Line, 15-micron Absolute and 5-micron Absolute, Type II Systems*, 27 September 1976.

54. M. Grayson, Ed., *Encyclopedia of Chemical Technology, Vol. 5*, John Wiley and Sons, Inc., New York, NY, 1979, pp. 393-4.

55. MIL-HDBK-783(EA), *Chemical and Biological (CB) Contamination Avoidance and Decontamination*, October 1990.

56. T. E. Hill *et al.*, *Guidelines—Design to Minimize Contamination and to Facilitate Decontamination of Military Vehicles and Other Equipment: Interiors and Exteriors*, US Army Armament, Munitions, and Chemical Command, Aberdeen Proving Ground, MD, 1984.

57. FM 3-5, *NBC Decontamination*, Department of the Army, June 1985.

58. *Chemical Warfare Agents*, Swedish National Defense Research Institute, Liber Distribution, Stockholm, Sweden, June 1983.

Downloaded from http://www.everyspec.com

59. R. Trapp, *The Detoxification and Natural Degradation of Chemical Warfare Agents*, Stockholm International Peace Research Institute, Philadelphia, PA, 1985.

60. P. E. Bailey *et al.*, *Nuclear Biological, and Chemical Contamination Survivability Methodology: A Manual for Equipment Development Contractors and Government Combat and Materials Developers*, Report No. CRDEC-87033, US Army Chemical Research, Development, and Engineering Center, Aberdeen Proving Ground, MD, December 1986.

61. E. R. Kinkead, J. R. Horton, C. L. Gaworski, and R. A. Salomon, *Acute Toxicity Studies of Two Air Force Hydraulic Fluids (MLO 82-233 and MLO 82-585)*, Report No. AAMRL-TR-85-070, Harry G. Armstrong Aerospace Medical Research Laboratory, Wright-Patterson Air Force Base, OH, November 1985.

62. *Threshold Limit Values for Chemical Substances in Workroom Air Adopted by ACGIH in 1979*, American Conference of Governmental Industrial Hygienists (ACGIH), Cincinnati, OH, 1979.

63. Peter Demas, "Outgassing of Shipboard Hydraulic Fluids", American Industrial Hygiene Association Journal **42** (February 1981).

64. J. D. Doull, C. D. Klasson, and M. D. Amdur, Eds., *Casarett and Doull's Toxicology: The Basic Science of Poisons*, MacMillan Publishing Company, New York, NY, 1979.

65. W. A. Beresford and P. Glees, "Degeneration in the Long Tracts of the Cords of the Chicken and Cat After Triorthocresyl Phosphate Poisoning", Acta Neuropathology 3, (1963).

66. C. E. Jones, T. J. Hoeflich, C. D. Flemming, J. Kessler, and P. R. Mattie, "Comparative Toxicity of Air Force Hydraulic Fluids", The Toxicologist **10**, (1), 250-6 (1990).

BIBLIOGRAPHY

J. E. Anders, *Industrial Hydraulics Troubleshooting*, McGraw-Hill Book Company, New York, NY, 1983.

J. G. Ashby and M. J. Pinches, *Power Hydraulics*, Prentice-Hall International (UK) Ltd, Hemel Hempstead, Hertfordshire, England, 1989.

R. M. Austin, *The Seal Users Handbook*, 2nd Edition, British Hydraulics Research Association Fluid Engineering, Cranfield, England, 1979.

Definition of Design Criteria for Energy Absorption Systems, NADC-AC-7010, Beta Industries, Inc., Naval Air Development Center, Warminster, PA, June 1970.

E. F. Brater, and H. W. King, *Handbook of Hydraulics*, McGraw-Hill Book Company, New York, NY, 1982.

F. C. Brink, Jr., "Fire-Resistant Hydraulic Fluids", Lubrication **58**, Texaco, Inc., New York, NY, October-December 1972.

H. H. Buchter, *Industrial Sealing Technology*, John Wiley & Sons, Inc., New York, NY, 1979.

L. P. Domzalski, *Dynamic Performance of a Variable-Load Energy Absorber*, NADC-80257-60, Naval Air Development Center, Warminster, PA, February 1982.

H. Dorr *et al.*, *The Hydraulic Trainer, Volume 2—Proportional and Servo Valve Technology*, Mannesmann Rexroth GmbH, Lohr am Main, Germany, 1986.

A. Esposito, *Fluid Power With Applications*, 2nd Edition, Prentice-Hall, Inc., Englewood Cliffs, NJ, 1988.

Mobile Hydraulic Design Symposium Proceedings, Fluid Power Society, Milwaukee, WI, 1978.

R. W. Fox and A. T. McDonald, *Introduction to Fluid Mechanics*, 3rd Edition, John Wiley & Sons, Inc., New York, NY, 1985.

T. Frankenfield, *Using Industrial Hydraulics*, The Rexroth Corporation, Bethlehem, PA, 1979.

C. C. Hedges, *Fluid Power Designers Manual*, Womack Educational Publications, Dallas, TX, 1965.

A. H. Hehn, *Fluid Power Troubleshooting*, Marcel Dekker, Inc., New York, NY, 1984.

J. E. Johnson, *Electrohydraulic Servo Systems*, Penton/IPC, Cleveland, OH, 1977.

R. P. Lambeck, *Hydraulic Pumps and Motors: Selection and Applications for Hydraulic Power Control Systems*, Marcel Dekker, Inc., New York, NY, 1983.

D. McCloy and H. R. Martin, *Control of Fluid Power*, 2nd Edition, Ellis Harwood Limited, Chichester, England, 1980.

Industrial Hydraulic Technology, Parker Hannifin Corp., Training Department, Power and Controls Group, Cleveland, OH, 1974.

M. J. Pinches and J. G. Ashby, *Power Hydraulics*, Prentice-Hall International (UK) Ltd, Hemel Hempstead, Hertfordshire, England, 1988.

J. J. Pippenger, *Hydraulic Cartridge Valve Technology*, Amalgam Publishing Company, Jenks, OK, 1990.

J. J. Pippenger, *Hydraulic Valves and Controls: Selection and Application*, Marcel Dekker, Inc., New York, NY, 1984.

J. J. Pippenger, *Zero Downtime Hydraulics*, Amalgam Publishing Company, Jenks, OK, 1989.

W. Reeves, *The Technology of Fluid Power*, Prentice-Hall, Inc., Englewood Cliffs, NJ, 1987.

I. Shames, *Mechanics of Fluids*, McGraw-Hill Book Company, New York, NY, 1962.

A. L. Simon, *Hydraulics*, 3rd Edition, John Wiley & Sons, Inc., New York, NY, 1986.

C. E. Snyder *et al.*, "Determination of the Flammability Characteristics of Aerospace Hydraulic Fluids", Lubrication Engineering **37**, 12, 705-14 (December 1981).

Downloaded from http://www.everyspec.com

C. E. Snyder *et al.*, "Air Force Nonflammable Hydraulic System Materials Development", Society of Automotive Engineers Paper No. 851908, Air Force Wright Aeronautical Laboratories, Wright-Patterson Air Force Base, OH, and University of Dayton Research Institute, Dayton, OH, October 1985.

J. A. Sullivan, *Fluid Power: Theory and Applications*, 3rd Edition, Prentice-Hall, Inc., Englewood Cliffs, NJ, 1989.

C. M. Svoboda and J. C. Warrick, *Design and Development of Variable-Load Energy Absorbers*, NADC-80157-60, Naval Air Development Center, Warminster, PA, June 1981.

M. J. Tonyan, *Electronically Controlled Proportional Valves*, Marcel Dekker, Inc., New York, NY, 1985.

W. Wolansky and A. Akers, *Modern Hydraulics: The Basics at Work*, Merrill Publishing Company, Columbus, OH, 1988.

F. Yeaple, *Fluid Power Design Handbook*, 2nd Edition, Marcel Dekker, Inc., New York, NY, 1990.

Aircraft Crash Survival Design Guide, Volume IV-Aircraft Seats, Restraints, Litters, and Cockpit/Crew Delethalization, USAAVSCOM TR 89-D-22D, US Army Aviation Research and Technology Activity, Fort Eustis, VA, December 1989.

Downloaded from http://www.everyspec.com

APPENDIX A
CROSS-REFERENCE OF FLUID POWER STANDARDS

A-1 INTRODUCTION

This appendix contains a cross-reference of fluid power standards including terminology, component standardization, and component and fluid testing procedures. Standards are grouped by broad categories, such as accumulators, bibliographies and cylinders. Within each category, specific subjects are listed in numerical order, keying on the National Fluid Power Association (NFPA) standards numbers where an NFPA standard for the subject exists.

When referring to standards and specifications, ensure that the latest revision of that standard is being used. Standards are normally reviewed (and often revised) every five years; therefore, any dated document more than five years old may have a more recent revision. The status of any standard can be ascertained from the responsible standards organization.

A-2 CROSS-REFERENCE TABLES

A-2.1 ACCUMULATORS

SUBJECT	NFPA	ANSI	ISO	SAE	ASTM	FTM*
Accumulator Pressure Rating	T3.4.7M**	—	—	—	—	—
Procedure for Hydropneumatic Accumulator Use	T3.4.10M	—	—	—	—	—
Accumulator Pressure Volume Ranges, Characteristics and Identification	T3.4.11M	—	ISO 5596	—	—	—

A-2.2 BIBLIOGRAPHIES

SUBJECT	NFPA	ANSI	ISO	SAE	ASTM	FTM
Metrication	T2.10.5	—	—	J917	—	—
Accumulators	T3.4.8	—	—	—	—	—
Hydraulic Valves	T3.5.27	—	—	—	—	—
Fluid Power Cylinders	T3.6.36	—	—	—	—	—
Tube Fittings and Conductors	T3.8.11	—	—	—	—	—
Hydraulic Pumps and Motors	T3.9.21	—	—	—	—	—
Filtration and Contamination	T3.10.12	—	—	—	—	—
Reservoirs and Power Units	T3.16.9	—	—	—	—	—
Sealing Devices	T3.19.22	—	—	—	—	—
Quick Action Couplings	T3.20.7	—	—	—	—	—
Fluid Power Hose, Hose Fittings, and Hose Assemblies	T3.26.1	—	—	—	—	—
Compressed Air Dryer	T3.27.4	—	—	—	—	—
Fluid Logic	T3.29.4	—	—	—	—	—

* FTM = federal test method
** M = use of metric (SI) dimensioning

Downloaded from http://www.everyspec.com

A-2.3 CONDUCTORS, FITTINGS, AND ASSOCIATED HARDWARE

SUBJECT	NFPA	ANSI	ISO	SAE	ASTM	FTM
Metric Port Dimensions and Design	T2.8.2M	—	ISO 6149	—	—	—
Hydraulic Hose Fittings	—	—	—	J516	—	—
Hydraulic Tube Fittings	—	—	—	J514	—	—
Hydraulic Tube Fitting Test	T3.8.3M	—	—	—	—	—
4-Bolt Split Flange Dimension and Design	T3.8.19M	—	DIS 6162*	J518	—	—
Hydraulic O-Ring Seals	—	—	—	J515	—	—
O-Ring Face Seal Fitting Test	T3.8.20M	—	—	—	—	—
OD of Tubes and ID of Hoses	T3.8.22M	B93.59M	ISO 4397	J517	—	—
Normal Pressure for Connectors and Related Components	T3.8.23M	B93.60M	ISO 4399	—	—	—
Seamless, High-Strength Alloy Steel Tubing	T3.8.24M	—	—	—	—	—
High-Strength Fluid-Power Tubing	T3.8.25M	—	—	—	—	—
Hydraulic Hose Assembly Test Requirements	T.3.27M	—	DIS 6605	J517 J343	— —	— —
Square Flange Connection Dimensions (40 to 400 bar)	T3.8.28M	—	DIS 6163	—	—	—
Square Welded Collar Flanges Dimensions and Identification	—	—	DIS 6163	—	—	—
Hydraulic Line Welded Tubing	T3.15.1M	B93.4M	—	—	—	—
Hydraulic Line Seamless Tubing	T3.15.2M	B93.11M	—	—	—	—
Tube and Fitting Assembly Pressure Rating	T3.15.8M	—	—	J1065	—	—
Quick Action Coupling Terms	T3.20.1	B93.2A	—	—	—	—
Hydraulic Quick Action Coupling Test	T3.20.2M	B93.42M	DIS 7241	—	—	—
Quick Action Coupling Flow Pressure Drop Test	T3.20.6M	B93.6M	—	—	—	—
Quick Action Coupling Pressure Rating	T3.20.8M	—	—	—	—	—
Agricultural Quick Action Coupling Interface Dimensions	—	—	ISO 5675	J1036	—	—
Interchangeable, Industrial, Quick Action Couplings	T3.20.10M	—	DIS 7471	—	—	—
Hydraulic Quick Action Coupling Surge Flow Test/Short Duration	T3.20.11M	B93.68M	—	—	—	—

* DIS = draft international standard

(cont'd on next page)

Downloaded from http://www.everyspec.com

A-2.3 (Cont'd)

SUBJECT	NFPA	ANSI	ISO	SAE	ASTM	FTM
Quick Action Couplings Surge Flow Test/Long Duration	T3.20.12M	B93.69M	—	—	—	—
Hydraulic Tools Quick Action Coupling	T3.20.14	—	—	—	—	—
20-mm Quick Action Agricultural Coupling	T3.20.16M	—	—	—	—	—
Pressure Switch Terms	T3.29.1	—	—	—	—	—
Pressure Switch Pressure Rating	T3.29.2M	—	—	—	—	—
Rated Overrange Pressure Switches	T3.29.3M	—	—	—	—	—
Hydraulic Tubes/Hoses Dimensions and Designs (37° Flare/27° Flareless Fittings)	—	—	DP 8434*	—	—	—
Hydraulic Hose Fittings	—	—	—	J516	—	—
Flex-Impulse Test Procedure for Hydraulic Hose Assemblies	—	—	—	J1405	—	—
Selection, Installation, and Maintenance of Hose and Hose Assemblies	—	—	—	J1273	—	—
Power Steering Pressure Hose	—	—	—	J188	—	—
	—	—	—	J190	—	—
	—	—	—	J191	—	—
Power Steering Return Hose	—	—	—	J189	—	—
Hydraulic Brake Hose Assemblies—Nonpetroleum-Base Fluids	—	—	—	J1401	—	—
Identification Codes for Fluid Conductors and Connectors	—	—	—	J846	—	—
Formed Tube Ends for Hose Connections	—	—	—	J962	—	—
Flares for Tubing	—	—	—	J533	—	—
Seamless Low-Carbon Steel Tubing Annealed for Bending and Flaring	—	—	—	J524	—	—
Welded and Card Drawn Low-Carbon Steel Tubing Annealed for Bending and Flaring	—	—	—	J525	—	—
Welded Low-Carbon Steel Tubing	—	—	—	J526	—	—
Brazed Double Wall Low-Carbon Steel Tubing	—	—	—	J527	—	—
Welded Flash Controlled Low-Carbon Steel Tubing Normalized for Bending, Double Flaring, and Beading	—	—	—	J356	—	—
Automotive Pipe Fittings	—	—	—	J530	—	—

* DP = draft proposal

Downloaded from http://www.everyspec.com

A-2.4 CYLINDERS

SUBJECT	NFPA	ANSI	ISO	SAE	ASTM	FTM
Cylinder Bores and Piston Sizes (Inch Series)	T3.6.1	B93.3	—	—	—	—
Cylinder Dimension Code	T3.6.2M	B93.1M	ISO 6099	—	—	—
Cylinder Bore Rod Sizes	T3.6.4M	B93.8M	—	—	—	—
Cylinder Static Pressure Rating	T3.6.5M	B93.10M	—	—	—	—
Cylinder Static Pressure Rating	T3.6.5M	—	—	—	—	—
Cylinder Mounting Dimensions	T3.6.7	B93.15	—	—	—	—
Cylinder Accessory Dimensions	T3.6.8M	B93.29M	—	—	—	—
Miniature Cylinder Dimensions	T3.6.11M	B93.34M	—	—	—	—
Cylinder Port Sizes	T3.6.17M	—	—	—	—	—
Metric Cylinder Dimensions Compact Series	T3.6.28M	—	ISO 6020	—	—	—
Tie Rod/Bolted Cylinder Pressure Rating	T3.6.29M	—	—	—	—	—
Telescopic Cylinder and Cylinders of Nonbolted End Construction	T3.6.31M	—	—	—	—	—
Large Bore Cylinder Mounting Dimensions	T3.6.32M	—	—	—	—	
Cylinder Bore/Rod Diameters (Metric Series)	T3.6.33M	B93.52M	ISO 3320	—	—	—
Cylinder Bore/Rod Diameters (Metric Series) Mobile Equipment Supplement	T3.6.33M	—	—	—	—	—
Cylinder Bore/Rod Diameters (Inch Series)	T3.6.34	—	ISO 3321	—	—	—
Normal-Pressure Cylinders	T3.6.35M	B93.53M	ISO 3322	—	—	—
Cylinder Buckling Strength Test	T3.6.37	—	—	—	—	—
Hydraulic Cylinders (160 bar) Medium Series	—	—	ISO 6020	—	—	—
Hydraulic Cylinders (250 bar) Mounting Dimensions	—	—	ISO 6022	—	—	—
Hydraulic, Single-Rod Compact Cylinder Tolerances (160 bar)	—	—	DIS 8131	—	—	—
Nonferrous Pneumatic Cylinder Tubes	—	—	ISO 6537	—	—	—
Piston Strokes (Metric Only)	T3.6.46M	B93.56M	ISO 4393	—	—	—
Piston Rod Threads	T3.6.48M	B93.61M	ISO 4395	—	—	—
Hydraulic Cylinder Ratios	—	—	ISO 7181	—	—	—
Hydraulic Cylinder Mounting Accessories (160 bar)	T3.6.51M	—	—	—	—	—

(cont'd on next page)

Downloaded from http://www.everyspec.com

A-2.4 (Cont'd)

SUBJECT	NFPA	ANSI	ISO	SAE	ASTM	FTM
Straight Thread and Flange Port Standardization	T3.6.54M	—	—	—	—	—
Mill Cylinder Standardization	T3.6.56	—	—	—	—	—
Hydraulic Cylinder Rod End Plain Eyes	—	—	ISO 6981	—	—	—
Hydraulic Cylinder Rod End Sperical Eyes	—	—	ISO 6932	—	—	—
Steel Tube Specifications	—	—	ISO 4394	—	—	—
Hydraulic Cylinder Accessory Mounting Dimensions (160 and 250 bar)	—	—	DIS 8132	—	—	—
Hydraulic Single-Rod Compact Cylinders Accessory Mounting Dimensions (160 bar)	—	—	DIS 8133	—	—	—
Hydraulic Single-Rod Compact Cylinder Rod End Sperical Eyes Mounting Dimensions (160 bar)	—	—	DP 8134	—	—	—
Hydraulic Single-Rod Cylinder Tolerances (160 and 250 bar)	—	—	DIS 8135	—	—	—
Linear Actuator Rod Seal Test	T3.19.12M	B93.62M	—	—	—	—
Cylinder Rod Wiper Seal Ingression Test	—	—	—	J1195	—	—
Hydraulic Single-Rod Cylinder Port Dimensions (160 bar medium)	—	—	DIS 8136	—	—	—
Hydraulic Single-Rod Cylinder Port Dimensions (250 bar medium)	—	—	DIS 8137	—	—	—
Hydraulic Single-Rod Cylinder Port Dimensions (160 bar compact)	—	—	DIS 8138	—	—	—
Hydraulic Single-Rod Compact Cylinder Mounting Dimensions (160 bar) 250 mm thru 500 mm	—	—	DP 8141	—	—	—

A-2.5 FILTRATION AND CONTAMINATION ANALYSIS

SUBJECT	NFPA	ANSI	ISO	SAE	ASTM	FTM
Extracting Fluid Samples	T2.9.1M	B93.19M	ISO 4021	J1227	—	—
Sample Containers	T2.9.2M	B93.20M	ISO 3722	—	—	—
Contamination Reporting	T2.9.3M	B93.30M	DIS 3938	J1165	—	—
Particle Count Procedure	T2.9.5M	—	—	—	—	—
Particle Counter Calibration	T2.9.6M	B93.28M	ISO 4402	—	—	—
Classified Test Calibration	T2.9.7M	—	—	—	—	—
Hydraulic System Cleaning	—	—	—	—	D 4174	—

(cont'd on next page)

Downloaded from http://www.everyspec.com

A-2.5 (Cont'd)

SUBJECT	NFPA	ANSI	ISO	SAE	ASTM	FTM
Roll-Off Cleanliness	T2.9.8M	B93.54M	—	J1227	—	—
Reservoir Sampling	T2.9.9M	B93.44M	—	—	—	—
Particulate Count Method	T2.9.11M	—	—	—	F 312	
In-Line Particle-Counting Method	T2.9.12M	—	—	—	—	—
Solid Contamination Code	T2.9.13M	—	ISO 4406	—	—	—
Fluid Contamination Gravimetric Method	T2.9.14M	—	DIS 4405	—	F 313	—
Cleanliness Levels Component *Assemblies*	T2.9.15M	—	—	J1227	—	—
Counting Method Under Transmitted Light	—	—	DIS 4407	—	—	—
Counting Method Under Incident Light	—	—	DIS 4408	—	—	—
Hydraulic Filter Separator Terms	T3.10.3	—	—	—	—	—
Hydraulic Filter Separator Graphic Symbols	T3.10.4M	—	—	—	—	—
Hydraulic Filter/Separator Housing Pressure Rating	T2.10.5.1M	—	—	—	—	—
Hydraulic Filter Element End Load Test	T2.10.8.2M	B93.21M	ISO 3123	—	—	—
Hydraulic Filter Element Built-in Contaminant	T2.10.8.3M	—	—	—	—	—
Hydraulic Filter Element Integrity	T3.10.8.4M	B93.22M	ISO 2942	—	—	—
Hydraulic Filter Element *Collapse/Burst Test*	T2.10.8.5M	B93.25M	ISO 2941	—	—	—
Hydraulic Filter Element Compatibility Test	T3.10.8.6M	B93.23M	ISO 2943	—	—	—
Hydraulic Filter Element Flow Fatigue Test	T3.10.8.7M	B93.24M	ISO 3724	—	—	—
Hydraulic Filter Fine Element Multipass Test	T3.10.8.8M	B93.31M	ISO 4572	—	—	—
Hydraulic Filter Element Determining	T3.10.12M	B93.46M	—	—	—	—
Port Size of Wire Cloth	T3.10.8.8M	B93.32M	ISO 4572	—	—	—
Hydraulic Filter Element Multipass Silt Control Test	T3.10.8.16M	—	—	—	—	—
Hydraulic Filter Coarse Element Multipass Test	T3.10.8.18M	—	—	—	—	—
Unsteady Flow Filter Test	T3.10.8.19M	—	—	—	—	—

(cont'd on next page)

Downloaded from http://www.everyspec.com

A-2.5 (Cont'd)

SUBJECT	NFPA	ANSI	ISO	SAE	ASTM	FTM
Hydraulic Filter Bypass Valve Test	T3.10.9.1M	—	—	—	—	—
Hydraulic Differential Pressure Indicator Test	T3.10.9.2M	—	—	—	—	—
Filtration and Contamination Bibliography	T3.10.12M	—	—	—	—	—
Hydraulic Filter Flow Rating	T3.10.14M	—	ISO 3968	—	—	—
Hydraulic Filter Requirements	T3.10.16M	—	DIS 7744	J931	—	—
Finite Life Hydraulic Filter Pressure Rating	T3.10.17M	—	—	—	—	—
Filter Artwork Universal Symbols	T3.10.18	—	—	—	—	—
Absorbent Filter Performance Test	T3.10.19	—	—	—	—	—
Filter Water Sensitivity Characteristics	T3.10.20	—	—	—	—	—

A-2.6 FLUIDS

SUBJECT	NFPA	ANSI	ISO	SAE	ASTM	FTM
Solid Contaminant Code for Fluids	T2.9.13M	—	ISO 4406	—	—	—
Fire-Resistant Fluids	T2.13.1M	B93.5M	ISO 6743/4	—	—	—
Fire-Resistant Fluids Trade Names	T2.13.2	—	—	—	—	—
Hydraulic Fluids Index	T2.13.3	—	—	—	—	—
Hydraulic Fluid Disposal	T2.13.4M	—	—	—	—	—
High Water Content Fluids	T2.13.5M	—	—	—	—	—
Petroleum Fluids Bulk Moduli	T2.13.7M	B93.63M	ISO 6073	—	—	—
Fire-Resistant Fluids Anticorrosive Power	—	—	DP 4404	—	—	—
Hydraulic Fluid Compatibility	—	—	DP 6072	—	—	—
Mineral Oils Classification	—	—	DP 6074	—	—	—
Mineral Oils Characteristics	—	—	DP 6075	—	—	—
Fire-Resistant Fluids Guidelines	—	—	DIS 7745	—	—	—
Viscosity Classification	—	—	ISO 3448	J300	D 445	305
Saybolt Viscosity	—	—	—	—	—	304
Viscosity vs Temperature Charts	—	—	—	—	D 341	9121
Calculation of Viscosity Index	—	—	—	—	D 2270	9111
Viscosity vs Shear Characteristics						
Diesel Injector Method	—	—	—	—	D 3945	—
Tapered Plug Viscometer Method	—	—	—	—	D 4741	—
Cloud Point	—	—	—	—	D 97	201
Pour Point	—	—	—	—	D 97	201

(cont'd on next page)

Downloaded from http://www.everyspec.com

A-2.6 (Cont'd)

SUBJECT	NFPA	ANSI	ISO	SAE	ASTM	FTM
Pour Stability	—	—	—	—	—	203
Diluted Pour Point	—	—	—	—	—	204
Cloud Intensity at Low Temperature	—	—	—	—	—	202
Freezing Point	—	—	—	—	D 1015	—
Flash Point						
Pensky-Martens Closed Cup	—	—	ISO 2719	—	D 93	1102
Cleveland Open Cup	—	—	ISO 2592	—	D 92	1103
Tag Closed Cup	—	—	—	—	D 56	1101
Fire Point	—	—	ISO 2592	—	D 92	1103
Effect of Evaporation on Flammability (Pipe Cleaner Test)	—	—	—	AMS 3150	—	352
High-Pressure Spray Ignition Test	—	—	—	—	—	6052
Low-Pressure Spray Ignition Test	—	—	—	AMS 3150	—	3119
Manifold Ignition Test	—	—	—	—	—	6053
Evaporation	—	—	—	—	—	353
Evaporation Loss	—	—	—	—	D 972	351
Evaporation Loss—High Temperature	—	—	—	—	—	350
API Gravity	—	—	—	—	D 287	401
Density and Specific Gravity						
Lipkin Pycnometer	—	—	—	—	D 941	402
Bingham Pycnometer	—	—	—	—	D 1217	—
Specific Gravity (Hydrometer)	—	—	—	—	D 1298	—
Emulsion Characteristics	—	—	—	—	D 1401	—
Emulsifying Tendency	—	—	—	—	—	3201
Foaming Characteristics	—	—	—	—	D 892	3211
Viscosity Stability at Low Temperature	—	—	—	—	D 2532	307
Gelling, Crystallization, and Separation	—	—	—	—	—	3458
Turbidity	—	—	—	—	—	3459
Sedimentation	—	—	—	—	D 2273	3004
Lubricity Tests						
Timken Tester	—	—	—	—	D 2782	6505
Falex Tester	—	—	—	—	D 3233	3807
Four-Ball Tester (Extreme Pressure)	—	—	—	—	D 2596	3812
Four-Ball Tester (Antiwear)	—	—	—	—	D 2266	6514
Recirculating Pump Test	—	—	—	—	D 2428	—
Pump Loop Wear Test	—	—	—	—	D 2271	—
Vane Pump Test	—	—	—	—	D 2882	—

(cont'd on next page)

Downloaded from http://www.everyspec.com

A-2.6 (Cont'd)

SUBJECT	NFPA	ANSI	ISO	SAE	ASTM	FTM
Load Carrying Ability						
Lubricating Oils	—	—	—	—	—	6511
Gear Lubricants	—	—	—	—	D 1947	6512
Gas Turbine Lubricants	—	—	—	—	—	6509
Ryder Gear Machine	—	—	—	—	—	6508
Liquid Stability Tests						
Color	—	—	—	—	D 1500	102
Neutralization Number by Potentiometric Titration	—	—	—	—	D 664	5106
Neutralization Number by Color Indicator Titration	—	—	—	—	D 974	5102
Acid Number by Semimicro Color Indicator Titration	—	—	—	—	D 3339	5105
Carbon Residue						
Conradson	—	—	—	—	D 189	5001
Ramsbottom	—	—	—	—	D 524	5002
Oxidation Stability Test						
Oxidation-Corrosion Test	—	—	—	—	D 4636	5307 5308
Oxidation Characteristics of Inhibited Mineral Oils	—	—	—	—	D 943	—
Thermal Stability	—	—	—	—	D 2160	2508
Hydrolytic Stability (Beverage Bottle Test)	—	—	—	—	D 2619	3457
Corrosiveness Tests·						
Corrosion and Oxidation Stability	—	—	—	—	D 4636	5308
Copper Strip Corrosion	—	—	—	—	D 130	5325
Corrosion at 232°C (450°F)	—	—	—	—	—	5305
Lead Corrosion	—	—	—	—	—	5321
Rust Preventing—Steam Turbine Oils	—	—	—	—	D 665	4011
Beverage Bottle Test	—	—	—	—	D 2619	3457
Humidity-Type Corrosiveness Tests						
Humidity Cabinet	—	—	—	—	D 1748	5329
Protection-Salt Spray	—	—	—	—	—	4001

A-2.7 INSTALLATIONS AND SYSTEMS

SUBJECT	NFPA	ANSI	ISO	SAE	ASTM	FTM
NFPA/JIC Hydraulic Systems	T2.24.1	—	—	—	—	—
Hydraulic Power Equipment Application to Transmission and Control Systems	—	—	ISO 4413	—	—	—

Downloaded from http://www.everyspec.com

A-2.8 PUMPS, MOTORS, POWER UNITS, AND RESERVOIRS

SUBJECT	NFPA	ANSI	ISO	SAE	ASTM	FTM
Fluid-Borne Pump Noise Measurement	T2.7.2M	—	—	—	—	—
Airborne Pump Noise Levels	T2.7.4M	—	ISO 4412	—	—	—
Airborne Motor Noise Levels	T2.7.5M	—	ISO 4412	—	—	—
Pump/Motor Flange/Shaft Dimensions (Inch Series)	T3.9.2	B93.6	ISO 3019	J744	—	—
Pump Sound Test	T3.9.12M	—	—	—	—	—
Pump/Motor Terms	T3.9.13	—	—	—	—	—
Motor Sound Test	T3.9.14M	—	—	—	—	—
Pump/Motor Test	T3.9.17M	B93.27M	DIS 4409	—	—	—
Pump Test	T3.9.17M	—	—	J745	—	—
Pump-Contaminant Test	T3.9.18M	—	—	—	—	—
Pressure-Compensated Pump Test	T3.9.20M	—	—	—	—	—
Hydraulic Pump/Motor Bibliography	T3.9.21	—	—	—	—	—
Pump/Motor Pressure Rating	T3.9.22	—	—	—	—	—
Motor Contaminant Test	T3.9.25M	—	—	—	—	—
Low-Speed, High-Torque Motor Flange/Shaft Dimensions	T3.9.26M	—	—	—	—	—
Pump/Motor Flange/Shaft Dimensions (Metric Series)	—	—	DP 3019	—	—	—
Polygon Flange Dimensions	T3.9.28M	—	ISO 3019	—	—	—
Pump/Motor Parameter Definitions	T3.9.29M	—	ISO 4391	—	—	—
Pump/Motor Geometric Displacements	T3.9.30M	B93.57M	ISO 3662	J745	—	—
Method of Test for Load Sensing Pumps	T3.9.33M	—	—	—	—	—
Hydraulic Reservoir Requirements	T3.16.2M	B93.18M	—	—	—	—
Power Unit Design Practice	T3.16.2M	—	—	—	—	—
Hydraulic Power Unit Requirements	T3.16.3M	B93.41	—	—	—	—
Hydraulic Reservoir Pressure Rating	T3.16.8M	—	—	—	—	—
Hydraulic Reservoir Bibliography	T3.16.9	—	—	—	—	—
Power Unit Installation Requirements	T3.16.10M	—	—	—	—	—
Reservoirs—Special Requirements to Accommodate High Water Content Fluids	T3.16.11M	—	—	—	—	
Motor Low-Speed Characteristics	—	—	DP 4392	—	—	—
Motor Test Startability	—	—	DP 4392	J746	—	—

Downloaded from http://www.everyspec.com

A-2.9 SEALING DEVICES

SUBJECT	NFPA	ANSI	ISO	SAE	ASTM	FTM
Sealing Device Terms	T3.19.1	—	—	—	—	—
Radial Sealing Device Dimensions	T3.19.4M	—	ISO 5597	J110	—	—
Method for Measuring Stack Heights	T3.19.5M	B93.17M	ISO 3939	—	—	—
Exclusion Devices Cavity Dimensions	T3.19.7M	B93-35M	—	—	—	—
Piston Ring Groove Dimensions	T3.19.11M	B93.36M	—	—	—	—
Sealing Device Test	T3.19.12.	B93.62M	—	—	—	—
Exclusion Device Test	T3.19.15M	—	—	J1195	—	—
Radial, Compression-Type Piston Ring Groove Dimensions	T3.19.18M	B93.32M	—	—	—	—
Sealing Devices Bibliography	T3.19.22	—	—	—	—	—
Wear Ring Groove Dimensions	T3.19.23M	—	—	—	—	—
Piston Seal Dimensions and Tolerances	—	—	DP 7425	—	—	—
Plastic-Faced Seal Dimensions and Tolerances	—	—	DP 7425	—	—	—
Piston Seal Housings Incorporating Bearing Rings	T3.19.26M	—	ISO 6547	—	—	—
O-Ring Dimensions Metric Series	T3.19.27M	B93.58M	ISO 3601	—	—	—
Identification—Elastometric Materials	T3.19.28M	—	—	—	—	—
Rotory Shaft Lip-Type Seals Dimensions and Tolerances	T3.19.29M	—	ISO 6194	—	—	—
O-Ring Quality Acceptance Criteria	T3.19.30	—	DP 3601	—	—	—
O-Ring Design Criteria	—	—	DP 3601	J515	—	—
O-Ring Boss Seal Size	—	—	DP 3601	—	—	—
O-Ring Pump Flanges Sizes	—	—	DP 3601	—	—	—
Fluid Compatibility With Elastomeric Materials	—	—	DIS 6072	—	—	—
Rotary Shaft Lip-Type Seals	—	—	DP 6194	—	—	—
Hydraulic Cylinder Housing for Rod Wiper Rings in Reciprocating Applications	—	—	DP 6195	—	—	—

A-2.10 TERMINOLOGY AND SYMBOLS

SUBJECT	NFPA	ANSI	ISO	SAE	ASTM	FTM
Fluid Power Terms	T2.1.1	B93.2	—	—	—	—
	T2.1.2	B89.2	DIS 5598	—	—	—
Graphic Symbols	T2.1.3M	Y32.10	ISO 1219	—	—	—
Fluid Power Diagrams	—	—	DP 1219	—	—	—
Normal Pressures (Metric Only)	T2.1.4M	—	ISO 2944	—	—	—

(cont'd on next page)

Downloaded from http://www.everyspec.com

A-2.10 (Cont'd)

SUBJECT	NFPA	ANSI	ISO	SAE	ASTM	FTM
Fluid Power Mechanic-Technician-Engineer Job Responsibilities	T2.2.1	—	—	—	—	—
Preferred Metric Units	T2.10.1M	—	—	J1322	—	—
Voluntary Metric Language Usage	T2.10.2M	—	—	—	—	—
Identifying Metric Fluid Power Components	T2.10.4M	—	—	—	—	—
Cylinder Terms	T3.6.3	—	—	—	—	—
Hose Terms	T3.8.26	—	—	J517	—	—
Pump and Motor Terms	T3.9.13	—	—	—	—	—
Hydraulic Filter/Separator Terms	T3.10.3	—	—	J1124	—	—
Drafting Practice	—	Y14.17	—	—	—	—
FRL Terms	T3.127	—	—	—	—	—
Sealing Devices Terms	T3.19.1	—	—	—	—	—
Quick Action Couplings Terms	T3.20.1	B93.2A	—	—	—	—
Fluid Terms	—	—	—	—	D4175	—
Standard Reference Atmosphere	—	—	DP 8778	—	—	—

A-2.11 VALVES

SUBJECT	NFPA	ANSI	ISO	SAE	ASTM	FTM
Hydraulic Valve Interfaces	T3.5.1M	B93.7M	ISO 4401	—	—	—
Hydraulic Valve Interfaces 200 bar	T3.6.1M	B93.7M	—	—	—	—
Fluid Power Valves Connection Symbols	T3.5.2M	B93.9M	—	—	—	—
Hydraulic Valves Marking	T3.5.2M	—	—	—	—	—
Hydraulic Valve Interfaces 315 bar	T3.5.9M	B93.40M	—	—	—	—
Hydraulic Valve Metering Test	T3.5.14M	B93.66M	—	—	—	—
Hydraulic Valve Leakage Test	T3.5.15M	—	—	J1235	—	—
Hydraulic Flow Control Valve Test	T3.5.16M	—	—	—	—	—
Hydraulic Relief Valve Testing	T3.5.24M	—	—	—	—	—
Hydraulic Valve Pressure Rating	T3.5.26M	—	—	—	—	—
Hydraulic Valve Differential-Flow Characteristics	T3.5.28M	B93.49M	—	J1117	—	—
Hydraulic Valve Electrical Connector	T3.5.29M	—	—	—	—	—
Hydraulic Direction Valve Response Test	T3.5.30M	—	—	—	—	—
Mounting Cavities for Hydraulic Cartridge Valve	T3.5.31M	—	DP 7789	—	—	—

(cont'd on next page)

Downloaded from http://www.everyspec.com

A-2.11 (Cont'd)

SUBJECT	NFPA	ANSI	ISO	SAE	ASTM	FTM
Electrical Plug Connector Characteristics and Requirements	T3.5.32M	—	ISO 4400	—	—	—
Cylinder Actuator Mounted Valve Dimensions	T3.5.33M	—	—	—	—	—
Valve Mounting Surfaces Code for Identification	T3.5.34M	B93.65M	ISO 5783	—	—	—
Hydraulic Valve Interfaces Antirotation Device	T3.5.35M	—	—	—	—	—
Hydraulic Valve Interface Auxillary Port	T3.5.36M	—	—	—	—	—
Modular Stack Valve Dimensions	T3.5.37M	—	DP 7790	—	—	—
Hydraulic Valves Controlling Flow and Pressure Methods of Test	—	—	DIS 6403	—	—	—
Hydraulic Pressure Control Valve Mounting Surfaces	—	—	DP 5781	—	—	—
Hydraulic Flow Control Valve Mounting Surfaces	—	—	DIS 6263	—	—	—
Hydraulic Pressure Relief Valve Mounting Surfaces	—	—	DIS 6264	—	—	—
2-Pin Electrical Connector Characteristics and Requirements	—	—	DP 6952	—	—	—
Hydraulic Valve Pressure Differential Flow Characteristics	T3.5.43M	—	DIS 4411	—	—	—
Hydraulic Servovalve Test Methods	T3.5.44M	—	DIS 6404	—	—	—
2-Port Hydraulic Slip-in Cartridge Valves	T3.5.45M	—	DP 7368	—	—	—
Relief Valve Interfaces	T3.5.46M	—	—	—	—	—

Downloaded from http://www.everyspec.com

APPENDIX B
ACCUMULATOR SIZING WORKSHEETS

B-1 INTRODUCTION

The worksheets presented in this appendix can be used to determine the minimum accumulator volume required to perform specific functions. The accumulator selection will be based on the system duty cycle and the system operating requirements.

Worksheets are provided to size accumulators for the following applications:

1. Increasing flow capacity
2. Holding pressure
3. Emergency operation.

Tables are included to facilitate the completion of the worksheets. These worksheets are modeled after those presented in the *Accumulator Selection Manual* from Greer Hydraulics (Ref. 1).

B-2 INCREASING FLOW CAPACITY

The short-term flow capacity of an existing system can be increased by using a properly sized accumulator rather than by installing a larger pump. The practical size limitation of accumulators restricts this application to a small volume of fluid delivered at a high flow rate. Therefore, these applications are primarily for hydraulic cylinder operation.

In order to use an accumulator for this function, there must be some idle time during the cylinder duty cycle to allow the system to recharge the accumulator. Also the pump must be capable of operating at a pressure higher than the minimum pressure required to operate the system.

The following information is required:

1. Minimum operating pressure, kPa (lb/in.^{2}) p_1 = _____
2. Maximum allowable pressure, kPa (lb/in.^{2}) p_2 = _____
3. Pump flow rate, m^3/s (gpm) Q = _____
4. Volume of oil required for cylinder operation, m^3 (in.^{3}) V_c = _____
5. Cycle time, s t_c = _____
6. Dwell time during cycle, s t_0 = _____
7. Normal operating temperature, °C (°F). (Use 37.8°C (100°F) if temperature is unknown.) T = _____

Use these parameters to find the following values:

1. Required accumulator output volume, V_A in the SI system is

$$V_A = V_c - (Q \cdot t_c),\ \text{m}^3 \qquad V_A = ____$$

In the English system

$$V_A = V_c - 3.85\ (Q \cdot t_c),\ \text{in.}^3$$

Note: If $(Q \cdot t_c) < V_c$, an accumulator cannot be used for the application.

2. Pressure ratio: $PR = p_2/p_1$, dimensionless PR = _____
3. Adiabatic exponent n from Table B-1, dimensionless n = _____
4. Discharge coefficient, $f = 1 - \left(\frac{1}{PR}\right)^{\frac{1}{n}}$, dimensionless. f = _____

The accumulator size can now be calculated from

$$V_R = \frac{1.24 V_A}{f},\ \text{m}^3\ (\text{in.}^3).$$

This value V_R represents the smallest acceptable accumulator volume for the application. Accumulator manufacturers normally produce standard sizes; therefore, the next larger size should be selected.

B-3 HOLDING PRESSURE

For systems in which a cylinder must be held in position under pressure for long periods of time, an accumulator can be used to maintain pressure and compensate for leakage. Thus the pump can be unloaded or pump flow can be used to operate other branches of the system.

Sizing an accumulator for this purpose requires the following information:

1. Pressure required to hold the load, kPa (lb/in.^{2}) p_1 = _____
2. Relief valve or pump compensator pressure setting, kPa (lb/in.^{2}) p_2 = _____
3. Leakage rate, m^3/min (in.^{3}/min) Q_L = _____
4. Time the load must be held, min. t = _____

Use these parameters to find

1. Pressure ratio: $PR = p_2/p_1$, dimensionless PR = _____
2. Discharge coefficient, $f = 1 - \left(\frac{1}{PR}\right)^{\frac{1}{n}}$, dimensionless f = _____
3. Volume of makeup oil required from the accumulator, m^3(in.^{3}) V_L = _____

The required volume V of the accumulator can now be calculated from

$$V = \frac{1.24 V_L}{f},\ \text{m}^3\ (\text{in.}^3).$$

Downloaded from http://www.everyspec.com

B-4 EMERGENCY OPERATION

Emergency operation of all or a portion of the system may be required in case of a power loss or pump failure.

To size an accumulator for this situation, determine

1. Minimum pressure required to operate the system, kPa (psi) p_1 = _____
2. Relief valve setting, kPa (psi) p_2 = _____
3. Total volume of fluid required to operate the components, m^3 ($in.^3$) V_R = _____
4. System operating temperature, K (R). T = _____

Use these values to find

1. Pressure ratio: $PR = p_2/p_1$, dimensionless PR = _____
2. Adiabatic exponent n from Table B-1, dimensionless n = _____
3. Discharge coefficient, $f = 1 - \left(\frac{1}{PR}\right)^{\frac{1}{n}}$, dimensionless. f = _____

Calculate the accumulator volume required from

$$V = \frac{1.24 V_R}{f}, \text{ m}^3 \text{ (in.}^3\text{)}.$$

Accumulators used for this purpose should be precharged at 70 to 80% of p_1.

REFERENCE

1. *Accumulator Selection Manual*, Bulletin FPWB-2, Greer Hydraulics, Inc., Chatsworth, CA, 1980.

TABLE B-1. ADIABATIC EXPONENT FOR NITROGEN GAS n

AVERAGE PRESSURE	SYSTEM TEMPERATURE, °C (°F)				
$\frac{p_1+p_2}{2}$, kPa (lb/in.^{2})	23.9 (75)	37.8 (100)	60 (140)	76.7 (170)	93.3 (200)
689.5 (100)	1.4	1.4	1.4	1.4	1.4
1034 (150)	1.4	1.4	1.4	1.4	1.4
1379 (200)	1.4	1.4	1.4	1.4	1.4
1724 (250)	1.5	1.4	1.4	1.4	1.4
2068 (300)	1.5	1.5	1.5	1.5	1.5
2413 (350)	1.5	1.5	1.5	1.5	1.5
2758 (400)	1.5	1.5	1.5	1.5	1.5
3447 (500)	1.5	1.5	1.5	1.5	1.5
4137 (600)	1.5	1.5	1.5	1.5	1.5
4826 (700)	1.5	1.5	1.5	1.5	1.5
5516 (800)	1.6	1.5	1.5	1.5	1.5
6205 (900)	1.6	1.6	1.5	1.5	1.5
6895 (1000)	1.6	1.6	1.6	1.5	1.5
8618 (1250)	1.6	1.6	1.6	1.6	1.6
10,342 (1500)	1.7	1.7	1.6	1.6	1.6
13,790 (2000)	1.8	1.7	1.7	1.7	1.6
17,237 (2500)	1.9	1.8	1.8	1.7	1.7
20,684 (3000)	1.9	1.9	1.8	1.8	1.7

Note: In calculating n factor, use next higher average pressure and next lower system temperature, i.e., if average pressure is 9653 kPa (1400 lb/in.^{2}) and system temperature is 51.7°C (125°F), n should be 1.7. If system temperature is unknown, use 37.8°C (100°F) as a general rule.

Downloaded from http://www.everyspec.com

GLOSSARY

A

Absolute Pressure. The sum of atmospheric and gage pressure.

Absolute Viscosity. The force required to move a plane surface over another plane surface at the rate of 1 cm/s when the surfaces are 1 cm^2 and are separated by a layer of fluid 1 cm in thickness; this force is known as the poise.

Accumulator. A fluid pressure storage chamber in which fluid pressure energy can be stored and from which it can be withdrawn.

Acid Number. The quantity of base, expressed in milligrams of potassium hydroxide, that is required to neutralize the acidic constituents in 1 g of sample.

Actuator. A device used to convert fluid energy into mechanical motion.

Additive. A chemical compound or compounds added to a liquid to change its properties.

Agent. Threat warfare material referring to either a chemical or biological substance.

Air-Gap Solenoid. A solenoid that is sealed to prevent leakage of the liquid into the plunger cavity.

Aqueous Decontamination. Removal of a chemical or biological hazard with a water-base solution.

Atmospheric Pressure. Pressure exerted by the atmosphere at any specific location; sea level atmospheric pressure is approximately 14.7 psia.

Autoignition Temperature (AIT). The temperature at which a liquid placed on a heated surface will ignite spontaneously.

Axial Piston Constant Volume Pump. A pump with a fixed volumetric output and with multiple pistons having their axes parallel to the drive shaft.

Axial Piston Variable Volume Pump. An axial piston pump with an adjustable, controlled volumetric output.

B

Bacteria. Microorganisms often composed of a single cell.

Base Number. The amount of acid, expressed in terms of the equivalent number of milligrams of potassium hydroxide, required to neutralize all basic constituents present in 1 g of sample.

Beta Rating. A method of rating filter performance.

Biocides. Additives designed to inhibit the growth of microorganisms in liquids.

Biological Agent. Either microorganisms or toxins that cause casualties to human beings and have military applications.

Bladder Accumulator. An accumulator in which the liquid and gas are separated by an expandable bladder or elastic bag.

Boiling Point. The temperature at which a fluid refluxes or distills under carefully specified conditions.

Bulk Modulus. The reciprocal of compressibility; usually expressed in pascals or pounds per square inch.

Bypass. An alternate route that provides passage for a liquid around a component.

Bypass Filter. A filter that receives only a portion of the total fluid flow; continuous mixing of the filtered and unfiltered fluid ensures that all of it is eventually filtered in a reasonable period of time.

C

Cam-Operated Valve. A valve in which the spool is positioned mechanically by a cam.

Cavitation. A phenomenon of formation of cavities in a liquid across which the liquid can move with high velocity; produces a hammer effect on any object it strikes. It usually occurs where pressure is low and velocity high. Cavitation generally causes noise and damage to system components.

Centipoise. A unit of absolute viscosity.

Centistoke. A unit of kinematic viscosity.

Centrifugal Pump. A pump that has an impeller rotating in a housing; liquid is carried around the periphery of the housing and discharged by centrifugal force.

Check Valve. A valve that permits flow of fluid in one direction only and self-closes to prevent any flow in the opposite direction.

Closed Center Valve. A valve that in the center position has all ports closed.

Closed Loop Fluid Power. A fluid power system in which fluid circulates from the pump to the actuator (usually a hydraulic motor) and directly back to the pump without passing through a reservoir; normally includes some pressure control valving. If a reservoir is included, it is used exclusively as a replenishment source.

Cloud Point. The temperature at which wax or other dissolved solids first precipitate during chilling under specified conditions.

Coefficient of Thermal Expansion. The change in weight per unit volume per deg change of temperature.

Downloaded from http://www.everyspec.com

Compressibility. The reduction in volume of a liquid when pressure is applied; compressibility is usually measured in terms of the bulk modulus, which is the reciprocal of compressibility.

Conduction. The process of energy transfer as heat through a stationary medium.

Control. A device used to regulate the functions of a component or system to which it is usually connected; may be integral or remote.

Convection. The process of energy transfer as heat between solids and moving fluids.

Corrosion Inhibitors. Inhibitors that act by reaction with metal surfaces to form protective coatings on the metal.

Cylinder. A device used to convert fluid energy into linear motion; usually consists of a movable element, such as a piston and piston rod, plunger or ram operating within a cylindrical bore.

D

Decontaminants. The substances used to remove or detoxify a chemical or biological hazard.

Decontamination. The process of removing, neutralizing, containing, and detoxifying a chemical or biological hazard.

Density. The mass of a material occupying unit volume at a specified temperature; its dimensions are mass per unit volume.

Diaphragm Accumulator. An accumulator in which the liquid and gas are separated by a flexible diaphragm.

Directional Valve. A valve whose primary function is to direct or prevent flow through selected passages.

Double-Acting Cylinder. A cylinder that moves in either direction due to fluid flow and pressure.

Double-End Rod Cylinder. A cylinder with a single piston and with a rod extending from each end.

E

Electric Control. A control actuated by an electrical device.

Emulsion. An intimate dispersion of one liquid within another.

F

Film Strength. The ability of a liquid to maintain a film.

Filter. A device through which a fluid is passed to separate material held in suspension. The filter medium is the material that removes the solids and consists of materials, such as paper, cloth, finely woven screen, sintered metals, or finely divided solids such as clay and activated charcoal.

Fire Point. The temperature at which a liquid will burn continuously when ignited by a small flame under carefully specified conditions.

Fire-Resistant Fluid. A fluid difficult to ignite and that shows little tendency to propagate flame.

Fixed-Displacement Motor. A rotary motor in which the displacement per revolution is fixed.

Flash Point. The temperature at which a liquid gives off sufficient flammable vapors to ignite but not to continue to burn when approached by a small flame under carefully specified conditions.

Flow-Control Valve. A valve whose primary function is to control the flow rate.

Flow-Dividing Valve. A valve that divides the flow from a single source into two or more branches.

Flow-Dividing, Pressure-Compensating Valve. A valve that divides the flow from a single source into two or more branches at a constant ratio regardless of the difference in the resistances of the branches.

Flow Rate. The volume of a fluid flowing per unit of time.

Flow Velocity. The rate of speed at which a volume of fluid passes a particular point in a passage.

Fluid. A substance that yields to any pressure tending to alter its shape. Fluid, by strict definition, includes both liquid and gas.

Fluid Power. Power transmitted and controlled through use of a pressurized fluid.

Foam. An intimate mixture of gas and liquid occupying much more volume than the liquid alone.

Foam Inhibitors. Inhibitors that modify (increase or decrease) the stability of an interface between two phases in a fluid system.

Four-Way Valve. A valve having four controlled working passages that usually end in four external ports.

Freezing Point. The temperature at which a fluid changes from liquid phase to solid phase.

Friction. Resistance to motion; fluid friction is that friction due to the viscosity of the fluid.

G

Gear Pump. A pump having two or more intermeshing gears or lobed members enclosed in a suitably shaped housing.

H

Halogenated-Type Fluid. A fluid composed of halogenated organic materials; may contain additional amounts of other constituents.

Heat Exchanger. A device used to transfer heat from a hot fluid to a cold one without the two coming in contact with each other. When used as a fluid cooler in a hydraulic sys-

Downloaded from http://www.everyspec.com

tem, it may take the form of either a nest of pipes in a suitable container through which coolant flows or a radiator.

Hose. A flexible conduit used to convey fluid.

Hydraulic Control. A control actuated by liquid pressure.

Hydraulic Fluid. A fluid suitable for use in hydraulic systems.

Hydraulic Power System. A means of energy transmission in which a relatively incompressible liquid (hydraulic fluid) is used as an energy-transmitting medium.

Hydrolytic Stability. Resistance to permanent change in properties caused by a chemical reaction with water.

Hydropneumatic. The combination of hydraulic and pneumatic power in a unit.

I

Improvers. Performance additives that enable the formulation of multigrade oils.

Inhibitor. Any substance that slows, prevents, or modifies chemical reactions such as corrosion or oxidation.

Intensifier. A device which increases the working pressure over that delivered by a primary source. For example, a device in which a low pressure acts on a large piston directly coupled to a smaller piston which then produces a higher pressure.

Isentropic. Having the same properties in all directions.

Isothermal. Describing a condition of constant temperature.

K

Kinematic Viscosity. The ratio of absolute viscosity to the density of a fluid. The unit of kinematic viscosity is the stoke. Viscosity in stokes multiplied by the density at the test temperature equals the absolute viscosity in poise.

L

Laminar Flow. A flow situation in which motion occurs as a movement of one layer of fluid upon another. This is synonymous with a streamline flow.

Liquid Level Control. An automatic means by which the fluid volume of a reservoir or tank is either replenished or drained.

Lubricity. A measure of the ability of lubricants to reduce the friction or war between two solid surfaces in contact with each other.

M

Mechanical Control. A control actuated by linkages, cams, gears, screws, or other mechanical means.

Motor. A device used to convert fluid energy into mechanical motion.

N

Neutralization Number. A measure of the acidity or basicity of a liquid; defined as milligrams of potassium hydroxide required to neutralize the acidity in 1 g of fluid or the equivalent of the basicity expressed similarly.

Nonflammable Fluid. Any fluid that will not ignite.

Nonseparator Accumulator. An accumulator in which a compressed gas operates directly upon the liquid in the pressure chamber.

Nuclear Radiation. Particulate and electromagnetic radiation emitted from atomic nuclei in various nuclear processes. The important nuclear radiations, from a weapon standpoint, are alpha and beta particles, gamma rays, and neutrons.

O

Open Loop Fluid Power. A fluid power system in which all fluid from actuators, drains, and auxiliary circuits returns to a reservoir where it is picked up by the pump to be recirculated.

Operating Pressure. The pressure at which a system operates.

Organic Ester Fluid. A fluid composed of esters of carbon, hydrogen, and oxygen; may contain additional amounts of other constituents.

Oscillatory Motor. A rotary actuator giving an angular movement of less than 360 deg; sometimes referred to as a rotary hydraulic actuator.

Oxidation. A chemical reaction of oxygen with a liquid; results in the formation of oxidation products, which can cause changes in properties.

Oxidation Inhibitors. Inhibitors that increase the resistance of the fluid to the chemical changes associated with oxidation.

Oxidation Stability. Resistance to permanent changes in properties caused by a chemical reaction with oxygen.

P

Petroleum Fluid. A fluid composed of petroleum hydrocarbons; may contain additional amounts of other constituents.

Phosphate Ester Fluid. A fluid composed of phosphate esters; may contain additional amounts of other constituents.

Pilot Line. A tube or hose that conducts control fluid.

Piping. All pipe, tubing, hose, and fittings.

Piston Accumulator. An accumulator in which a compressed gas operates on a piston that applies force to the stored liquid.

Downloaded from http://www.everyspec.com

Piston Cylinder. A cylinder in which the movable element has a greater cross-sectional area than the piston rod.

Plunger Cylinder. A cylinder in which the movable element has the same cross-sectional area as the piston rod.

Pneumatic Control. A control actuated by air or other gas pressure.

Poise. The standard unit of absolute viscosity in the centimeter-gram-second system; expressed in dyne seconds per square centimeter.

Polyalkylene Glycol Fluids. A fluid composed of polyalkylene glycols or derivatives; may contain additional amounts of other constituents.

Pour Point. The lowest temperature at which a liquid will flow without disturbance under a specified set of conditions.

Pour Point Depressants. Additives that act to lower the pour point of an oil.

Pressure. Force per unit area; usually expressed in pascals or pounds per square inch.

Pressure Drop. The amount of pressure difference, or the pressure required to force fluid through a component.

Pressure Loss. The fall in pressure due to hydraulic friction in a component or circuit.

Proportional Solenoid. A solenoid in which the plunger position is controlled by the current applied to the coil.

Pump. A device that converts mechanical energy into fluid energy.

Pump Control. Controls applied to hydraulic pumps to adjust their output or direction of flow.

Pump Slippage. Internal leakage in a pump from outlet to inlet side.

R

Rad. A measure of exposure to nuclear radiation; one rad is equal to 100 erg absorbed per gram of absorber (1 rad = 0.01 J/kg).

Radial Piston Constant Volume Pump. A pump with a fixed volumetric output and having multiple pistons disposed radially.

Radial Piston Variable Volume Pump. A radial piston pump with an adjustable volumetric output.

Radiation. The process by which heat flows from a high-temperature body to a lower temperature body when the bodies are separated in space, even when a vacuum exists between them.

Radiolysis. Exposure or subjection to nuclear radiation.

Reciprocating Pump. A pump having reciprocating pistons to pressurize fluid.

Reservoir. A container for fluid from which the fluid is withdrawn and returned after circulation through the system. The reservoir may be open to the atmosphere, or it may be closed and pressurized.

Reynolds Number. A dimesionless number used in considerations of fluid flow and given by the equation: R_e = (velocity)(pipe diameter)/kinematic viscosity. When the Reynolds number is below 2000, laminar flow generally exists; at higher values, flow may be either laminar or turbulent, but the higher the value, the less likely the flow will be laminar.

Rotary Motor. A motor producing continuous rotary motion.

Rust Inhibitors. Inhibitors that specifically work to prevent the corrosion of ferrous metals.

S

Saybolt Universal Seconds (SUS). The time in seconds required for 60 mL of liquid to flow through a standard orifice at a given temperature.

Screw Pump. A pump having one or more screws rotating in a housing.

Seal. A material or device designed to prevent leakage between parts, moving or static.

Servo Control. A control actuated by a feedback system that compares the output with the reference signal and makes corrections to reduce the difference.

Servomechanism. Any mechanism that uses power magnification and in which a means of relating the speed and travel of the input and output is incorporated.

Shear. A measure in a fluid of the force component tangent to a surface.

Silicate Ester Fluid. A fluid composed of organic silicates; may contain additional amounts of other constituents.

Silicone Fluid. A fluid composed of silicones; may contain additional amounts of other constituents.

Single-Acting Cylinder. A cylinder in which the fluid pressure is applied in only one direction.

Single-End Rod Cylinder. A cylinder with a rod extending from one end.

Solenoid. An electromagnet consisting of a wire-wound coil with a moving plunger that moves when the electric current is switched on.

Specific Gravity. The ratio of the weight of a given volume of fluid to the weight of an equal volume of water.

Specific Heat. The heat required to raise a unit mass one deg of temperature.

Spring-Loaded Accumulator. An accumulator in which the compression energy is supplied by a spring.

Stability. Resistance to permanent changes in properties under normal storage and use conditions.

Downloaded from http://www.everyspec.com

Static Pressure. The pressure that exists if there is no motion in the liquid.

Steady State Flow. A flow situation wherein conditions such as pressure, temperature, and velocity at every point in the fluid do not change.

Stoke. The standard unit of kinematic viscosity in the centimeter-gram-second system; expressed in square centimeters per second.

Strainer. A filter made from wire mesh that is capable of removing the larger particles of solids from a fluid.

Streamline Flow. A flow situation is which motion occurs as a movement of one layer of fluid upon another. *See also* Laminar Flow.

Suction Pressure. The pressure of the liquid at the inlet of a pump.

Switch Pressure. A switch operated by pressure and used to (a) control pressure between predetermined limits, (b) start or stop a sequence when a certain pressure is reached, and (c) as a safety device.

Synthetic Fluid. A fluid that, by definition, is nonpetroleum but may contain nonfunctional amounts of petroleum. Specifically, permits petroleum to be used as a carrier for a constituent, i.e., an additive, etc., but excludes petroleum used for any benefit of its properties per se.

T

Thermal Stability. Resistance to permanent changes in properties caused solely by heat.

Thermostat. A device used to control temperature either by switching on and off an electric current or by opening and closing a valve in a liquid line.

Torque. Force applied through a rotary path of motion.

Toxin. Any poisonous, secreted product from a microorganism, animal, or plant; may be produced by organic synthesis.

Turbulent Flow. A flow situation in which the liquid particles move in a random manner.

Two-Stage Pump. A pump with two separate pumping elements connected in a series. The primary stage may be used to ensure that the second main stage is not starved for fluid, or it may produce much of the pressure rise throughout the pump.

V

Vacuum. A pressure that is less than the prevailing atmospheric pressure.

Valve. A device used to control the flow rate, direction of flow, or pressure of a liquid.

Vane, Constant Volume Pump. A pump having a fixed volumetric output with multiple vanes within a supporting rotor encased in a cam ring.

Vane, Variable Volume Pump. A vane pump having suitable means of changing the volumetric output.

Vapor Pressure. The pressure exerted by a material under consideration at a specified temperature.

Variable-Displacement Motor. A rotary motor in which the displacement per revolution is adjustable.

Viscometer. A device used to measure viscosity.

Viscosity. The resistance of a fluid to flow or the internal resistance to flow existing between two liquid layers when they are moved relative to each other.

Viscosity Index (VI). An empirical number that indicates the viscosity-temperature characteristics of a fluid.

Volatility. The property of a fluid that describes the degree to which it will vaporize under given conditions of temperature and pressure.

W

Water-Glycol Fluids. A fluid whose major constituents are water and one or more glycol or polyglycol; may contain additional amounts of other constituents.

Water-Oil Emulsion Fluids. A stabilized emulsion of water-oil; may contain additional amounts of other constituents. There are two types: (1) oil-in-water, a conventional, soluble oil in which oil is dispersed in a continuous phase of water and (2) water-in-oil, a dispersion of water in a continuous phase of oil.

Weight-Loaded Accumulator. An accumulator in which weights apply force to the stored liquid.

Wet Armature Solenoid. A solenoid that uses a cylindrical plunger operating inside a tube filled with system fluid.

Downloaded from http://www.everyspec.com

INDEX

A

Accumulator, 2-26
  pneumatic-loaded, 2-28
  sizing, 2-30, B-1
  spring-loaded, 2-28
  weight-loaded, 2-27—2-28
Actuators, 2-12—2-21
  hydrostatic transmissions, 2-20—2-21
    fixed-displacement pump and motor, 2-20
    fixed-displacement pump and variable-displacement motor, 2-21
    variable-displacement pump and fixed-displacement motor, 2-21
    variable-displacement pump and motor, 2-21
  linear, 2-12
    applications, 2-12
    cushioned or noncushioned, 2-14
    dual, 2-14
    mounting, 2-14, 2-15
    nonrotating, 2-13
    piston, 2-13
    plunger, 2-13
    rotating, 2-12
    single, 2-14
    tandem, 2-14
  rotary actuators or motors, 2-16, 2-20
    gear motors, 2-16—2-18
      crescent seal, 2-17
      gear-on-gear, 2-17
      gerotor type, 2-18
    limited rotation motors, 2-18
      piston type, 2-19
      vane type, 2-18, 2-19
    low-speed, high-torque motors, 2-20
    piston motors, 2-19
      axial piston type, 2-20
      radial piston type, 2-20
      rotary piston type, 2-20
    vane motors, 2-18
Additives
  antiwear, 5-7
  biocides, 5-10
  cavitation inhibitors, 5-10
  corrosion inhibitors, 5-3—5-5
  demulsifiers, 5-6, 5-7
  elastomer swell, 5-9
  emulsifiers, 5-6, 5-7
  foam inhibitors, 5-6
  friction modification, 5-8
  hydrolysis inhibitors, 5-9
  oiliness, 5-7
  oxidation inhibitors, 5-1
  pour point depressants, 5-9
  viscosity index improvers, 5-5
Antioxidants mode of action, 5-1
  classes of, 5-1
Antiwear additives, 5-7
API gravity, 3-32
  test methods, 3-32
Autoignition temperature, 3-20
  test method, 3-20

B

Battlefield damage and repair options, 6-20
Beta rating, 2-3
Beverage bottle test, 3-61
Biocides, 5-10
Biological contaminants, 7-15, 7-16, 7-17
Boiling point, 3-30
Boundary lubrication, 3-47, 5-7
Bulk modulus, 1-7, 3-35—3-40
  estimation of, 3-39, 3-40
  measurement of, 3-38
  secant, 3-36, 3-37, 3-38
  sonic, 3-37, 3-38
  tangent, 3-37, 3-38

C

Carbon residue, 3-59
Cartridge valve, 2-46
Cavitation, 6-2
Cavitation inhibitors, 5-10
Chemical corrosion, 3-62
Chemical properties, 3-53
Chemical stability, 3-53
  tests, 3-57
    carbon residue, 3-59
    color, 3-58
    neutralization number, 3-58
Chlorotrifluoroethylene (CTFE), 4-13, 4-29
Classes of lubricity additives, 5-8
  aryl ether fluids, 5-9
  mineral oils and esters, 5-8
  silicon-containing fluids, 5-8
Classification of hydraulic fluids, 4-1

Downloaded from http://www.everyspec.com

by chemical properties, 4-1
by flammability, 4-2
by operating temperatures, 4-1—4-2
by viscosity, 4-1
petroleum or nonpetroleum, 4-2
used in this handbook, 4-7
Cloud point, 3-15
Coefficient of thermal expansion, 3-32
Compatibility, 6-1
filter and fluid, 2-25
with metals, 6-1—6-3
with system components, 6-16
with system materials, 1-5—1-6
Compressibility, 3-35
Conduction, 2-47
Connection between pump and drive motor, 2-11—2-12
Containers, 7-1
materials, 7-1
sizes, storage, and marking, 7-1
Contaminant exclusion, 7-14
Contaminant removal (filtration), 7-14
Contaminants, chemical and biological, 7-15—7-20
Contaminants, natural environment
analysis, 7-9—7-13
effect of, 7-6—7-9
sources, 7-3—7-5
types, 7-5—7-6
Contamination, 1-9
Contamination analysis, 7-9—7-13
chemical analysis, 7-11
combined counting and weighing methods, 7-10
liquid contaminant measurement, 7-11
particle measurement by counting, 7-9
particle measurement by weighing, 7-10
spectrometric (spectrographic) analysis, 7-13
Convection, 2-47—2-48
Corrosion inhibitors, 5-3—5-5
volatile, 5-5
Corrosiveness, 3-62
Corrosiveness tests, 3-63
Cost, 1-8
Critical volume reservoir, 2-22

D

Decontamination, 7-17—7-20
Demulsifiers, 5-7
Density, 1-8, 3-31
test methods, 3-32, 3-33
Density, specific gravity, and thermal expansion, 3-32
Directional control valves, 1-2—1-3
Dornte oxidation test, 3-61

E

Effects of contamination, 7-6—7-9, 7-17
container design, 7-19
decontamination, 7-17
effects of decontaminants, 7-19
on hydraulic fluid, 7-6
on hydraulic system, 7-6—7-9
methods of determining contaminant, 7-17
Elastomer materials, 6-4
test methods, elastomer-liquid compatibility, 6-10—6-12
Elastomer swell additives, 5-9
Electrochemical corrosion, 3-63
Emulsifiers, 5-7
Emulsions, 4-10
invert (water-in-oil), 1-7
oil-in-water, 1-7
Emulsions and foaming, 3-40
emulsion characteristics, 3-41
foaming characteristics, 3-41
tests for, 3-41
Equivalent length, 2-54
Ethers, 5-3
Evaporation, 3-30
Evaporation tests, 3-60
Extreme-pressure additives, 5-8
Extreme-pressure lubrication, 3-47

F

Film strength, 3-47—3-48
Filter, 2-22—2-26
Beta rating, 2-23
classification, 2-23
methods, 2-23—2-25
pressure drop, 2-25
ratings, 2-23
replacement or cleaning intervals, 2-25
Fire resistance, 1-7
Fire-resistant fluids, 1-7
Fire-resistant liquids, 3-28
Fittings, 2-51—2-53
Flammability characteristics, 3-17
autoignition temperature, 3-20
significance, 3-21
test method, 3-20
effects of evaporation (pipe cleaner test), 3-21
flash and fire points, 3-17
significance, 3-20
test methods, 3-17
Flammability test under simulated service conditions, 3-23
Flow, laminar, mixed, and turbulent, 3-7

Downloaded from http://www.everyspec.com

Flow-control valves, 1-3
Fluid
  availability, 1-8
  circuits, 1-2
  compatibility with
    additives, 6-13
    coatings, 6-12, 6-13
    elastomers, 6-3—6-12
    metals, 6-1—6-3
    other coatings, 6-12—6-13
    other lubricants, 6-13
    other system components, 6-16
    paints, 6-12
    system materials, 1-5—1-6
  conductors
    fittings, 2-51
    hose, 2-51
    pipe, 2-51
    tubing, 2-51
  container disposal, 7-21
  contamination, 1-9
  danger of explosion and fire, 7-21
  disposal, 1-8—1-9
  fire resistance and nonflammability, 1-7
  handling, 1-8
  health hazards, 7-20
  mechanics, 1-2
  nonpetroleum base, 4-7—4-11
    emulsions, 4-10
    glycols, 4-10
    halogenated hydrocarbons, 4-13
    liquid metals, 4-14
    organic acid esters, 4-9
    phosphate esters, 4-7, 4-11
    polyalphaolefins, 4-13
    polyoxyalkylene glycols, 4-10
    polyphenyl ethers, 4-13—4-14
    polysiloxanes, 4-9, 4-12
    silahydrocarbons, 4-12
    silicate esters, 4-9
    water glycols, 4-10
  petroleum base, 4-7
  physical properties, 3-2
  power standards, A-1
  power symbols, 1-2
  precautions in storage and handling, 7-20
  requirements, 1-5
  selection considerations, 6-13—6-20
    actuation, linear and rotary, 6-14
    arresting gear, 6-16
    braking, 6-15
    catapults, 6-15—6-16
    compatibility with system components, 6-16
    control and control systems, 6-15
    gun drive mechanisms, 6-16
    power transmission, fluid coupling, 6-14
    propulsion, 6-14
    shock absorbers, 6-15
    steering, 6-15
    temperature ranges, 6-19
    type of application, 6-14
  selection checklist, 6-20
  selection example, 6-21
  stability, 1-6
  substitution alternatives, 6-20
Fluid specifications, 4-14
  MIL-B-46176A, 4-20, 4-60
  MIL-F-17111B (OS), 4-14, 4-30
  MIL-H-87257, 4-19, 4-54
  MIL-H-17672D, 4-14,4-32
  MIL-H-19457D (SH), 4-21, 4-68
  MIL-H-22072C (AS), 4-19, 4-56
  MIL-H-27601A (USAF), 4-15, 4-34
  MIL-H-46001D, 4-15, 4-36
  MIL-H-46170B, 4-18, 4-50
  MIL-H-53119 (ME), 4-22, 4-70
  MIL-H-5559A (AS), 4-19, 4-57
  MIL-H-5606F, 4-15, 4-38
  MIL-H-6083E, 4-16, 4-40
  MIL-H-81019D, 4-16, 4-42
  MIL-H-83282C, 4-18, 4-52
  MIL-H-87257, 4-19, 4-54
  MIL-L-17331H (SH), 4-17, 4-44
  MIL-L-2104F, 4-17, 4-46
  MIL-L-46167B, 4-18, 4-48
  MIL-L-87100 (USAF), 4-20, 4-62
  MIL-S-81087C, 4-20, 4-64
  SAE J 1703, 4-20, 4-58
  VV-D-1078B, 4-21, 4-66, 4-67
Foam inhibitors, 5-6
Free radical acceptors, 5-2
Freezing point, 3-15
  significance of, 3-17
  test methods, 3-17
Friction modification additives, 5-8

G

Gas solubility, 3-42
Gearbox and engine corrosiveness tests, 3-64
Gear pumps
  external, 2-2
  helical, 2-3, 2-4
  herringbone, 2-4
  internal, 2-4
  spur, 2-2—2-3
Generated contaminants, 7-3
Glycols, 4-10
Gun drive mechanisms, 6-16

Downloaded from http://www.everyspec.com

H

Halogenated hydrocarbons, 4-13
Heat exchanger, 2-22, 2-46—2-50
  air-cooled, 2-49
  water-cooled, 2-49—2-50
Heat generation, 2-9, 2-46, 2-47
Heat transfer, 2-47—2-49
  characteristics, 3-34
    specific heat, 3-34
    thermal conductivity, 3-35
  coefficient, 2-48
  conduction, 2-47
  convection, 2-47—2-48
  radiation, 2-48
HFA, 1-7
HFAE, 1-7
HFAS, 1-7
HFB, 1-7
HFC, 1-7
HFD, 1-7
High-temperature test, 3-61
High water-base fluids, 1-7
Highly refined mineral oils, 5-2
Hose, 2-51, 2-52, 2-53
Humidity-type corrosiveness tests, 3-63
Hydraulic
  cylinder, 1-4
  fluid
    compatability with metals, 6-1—6-3
    substitution alternatives, 6-20
  fluids. *See* Fluid
  fuse, 2-33
  motor, 1-4
  power
    advantages, 1-1
    disadvantages, 1-2
    uses, 1-4—1-5
  system, 6-19—6-20
Hydrodynamic lubrication, 3-46, 5-7
Hydrolytic
  inhibitors, 5-9
  stability, 3-56
    tests, 3-61, 5-9
Hydroperoxide destroyers, 5-2
Hydrostatic transmission, 2-20—2-21

I

Indicators of liquid stability, 3-58
Ingested contaminants, 7-3
Injected contaminants, 7-3
Intensifier, 2-21—2-22
Invert emulsion, 1-7

L

Lacquer and insoluble material formation, 1-7
Linear variable differential transformer (LVDT), 2-42
Liquid contaminant measurement, 7-11
Liquid metals, 4-14
Liquid spring, 2-56—2-57
Low-temperature properties, 3-15
  cloud point, 3-15
  freezing point, 3-15
  pour point, 3-15
  significance of freezing and pour points, 3-17
  test methods, 3-16
Low-temperature stability, 3-43
  test, 3-61
    methods, 3-44
Lubrication properties, 3-45
Lubricating properties by pump tests, 3-51
  other lubricating characteristics tests, 3-52
  pump loop wear test, 3-52
  simulative recirculating pump test, 3-51
  vane pump test, 3-52
Lubricity, 1-6, 3-48, 5-7
  additives, 5-8

M

Metal deactivators, 5-2
Metal fatigue and stress corrosion, 6-2
Metal-liquid corrosiveness tests, 3-63
Motor, 1-4, 2-11, 2-12, 2-16—2-20

N

Neutralization number, 3-58
Newtonian fluids, 3-4
Nonflammable hydraulic fluids, 3-28
Non-Newtonian materials, 3-4
Nonpetroleum-base hydraulic fluids, 4-7, 4-11
Nonspecification and potential hydraulic fluids, 4-11
Nuclear radiation, 1-9

O

Oiliness, 3-48
  additives, 5-7
Organic acid esters, 4-9
Overall heat transfer coefficient, 2-48—2-49
Oxidation, 1-5, 1-6
  characteristics of inhibited mineral oils, 3-60
  inhibitors, 5-1
  stability, 3-53
    tests, 3-60

Downloaded from http://www.everyspec.com

test, 3-60—3-61

P

Penn State bomb test, 3-61
Perfluorinated polymers, 4-13
Perfluoropolyalkylether, 4-13
Petroleum-base hydraulic fluids, 4-7, 4-11
Phosphate esters, 4-7, 4-11
Pipe, 2-51, 2-52, 2-53, 2-54
Pneumatic power, 1-1
Poly (chlorophenyl methyl) siloxane, 4-12
Polyalphaolefins (PAO), 4-13, 5-3
Polyoxyalkylene glycols, 4-10
Polyphenyl ethers, 4-13—4-14
Polysiloxanes (silicones), 4-12
Pour point, 3-15
  depressants, 5-9
Pressure, 1-6—1-7
  compensation, 1-3
  control valves, 1-3—1-4
  loss
    equivalent length, 2-54
    in pipelines, 2-53—2-54
Proportional solenoid, 2-42, 2-43
Pumps, 2-2—2-11
  gear, 2-2—2-4
    external, 2-2
      helical, 2-3
      herringbone, 2-4
      spur, 2-2—2-3
    internal
      crescent seal, 2-4
      gerotor, 2-4
  piston, 2-6—2-10
    axial piston, 2-6—2-9
      bent axis, 2-8, 2-9
      in-line, 2-7
    radial piston, 2-9, 2-10
    rotating piston, 2-10
  screw, 2-11
  vane, 2-5—2-6
    balanced, 2-6
    unbalanced, 2-5

R

Radiation, 1-9, 2-48
  resistance, 3-56
    tests, 3-62
Radiolysis, 1-9
Reservoir, 2-22
  capacity, 2-22
  critical volume, 2-22
  as a heat exchanger, 2-50
  types, 2-22
Rod classification, 2-13
Rotary actuator, 2-16. *See also* Hydraulic motor.
Rupture disk, 2-33, 2-35
Rust inhibitors, mode of action, 5-3

S

Sedimentation, 3-45
Servovalve, 2-43, 2-44, 2-45
Shock absorber, 2-55—2-56
  hydraulic, 2-55—2-56
  hydropneumatic, 2-56
Silahydrocarbons, 4-12
Silicate esters, 4-9
Silicon-containing fluids, 5-2
Solenoid, 2-40—2-43
  air gap, 2-41, 2-42
  proportional, 2-42, 2-43
  wet armature, 2-41, 2-42
Solid particle contamination measurement
  by combined counting and weighing methods, 7-10
  by counting, 7-9
  by weighing, 7-10
Sources of contamination, 7-3, 7-15—7-16
  biological, 7-16
  chemical, 7-16
Specific heat, 3-34
Specific gravity, 3-32
  test methods, 3-32, 3-33, 3-34
Stability, 1-6
Storage, 1-8
Sustained high-temperature stability tests, 3-61
Symbols, 1-2, 1-3
Synergism, 5-2
Synthetic fluid, 1-7

T

Temperature, 1-5
Test methods
  API gravity, 3-32
  autoignition temperature, 3-20
  boiling point, 3-30
  bulk modulus, 3-38
  cloud point, 3-16
  coefficient of thermal expansion, 3-32
  density and specific gravity, 3-32
  elastomer-liquid compatibility, 6-10
  emulsion and foaming, 3-41
  flash and fire point, 3-17
  freezing point, 3-17

Downloaded from http://www.everyspec.com

low-temperature stability, 3-61
oxidation-corrosion, 3-60
pour point, 3-16
viscosity, 3-14
volatility, 3-29
wear, 3-49
Thermal
conductivity, 3-35
stability, 3-55
tests, 3-61
Thin film oxidation tests, 3-60
Tubing, 2-51, 2-52
Types of contaminants, 7-5, 7-16
biological agents, 7-17
chemical agents, 7-16
liquid contaminants other than water, 7-6
microbiological contaminants, 7-6
solid particle contaminant, 7-5
water, 7-5

V

Valves, 2-30—2-46
actuation, 2-39—2-45
cam, 2-40
manual, 2-40
pilot fluid, 2-45
proportional solenoid, 2-42—2-43
servomechanism, 2-43—2-44
solenoid, 2-40—2-42
spring, 2-40
mounting, 2-45—2-46
cartridge blocks, 2-46
in-line mounts, 2-45
subplate mounts, 2-45, 2-46
types, 2-30—2-39
directional control, 2-33—2-37
check, 2-33—2-34
deceleration, 2-36—2-37
four-way, 2-34—2-36
shuttle, 2-34, 2-36
three-way, 2-34, 2-36
two-way, 2-34, 2-36
flow-control, 2-37—2-39
flow divider valves, 2-39
globe and needle, 2-37—2-39
positive-displacement metering, 2-38, 2-39
pressure-compensated flow-control, 2-38
simple orifice, 2-37
temperature-compensated flow-control, 2-38
pressure control, 2-30—2-33
brake, 2-33
counterbalance, 2-32
hydraulic fuse, 2-33, 2-34
pressure reducing, 2-33
pressure relief, 2-30—2-31
rupture disk, 2-33, 2-35
sequence, 2-32
unloading, 2-31, 2-32
Vane pump, 2-5—2-6
Vapor pressure, 3-29
Viscosity, 1-5, 3-2
absolute, 3-2
of blends of two liquids, 3-11
index, 1-5, 3-10
improvers, 5-5
kinematic, 3-3
measurement, 3-5
other scales, 3-3
test, 3-6
unit conversions, 3-3
Viscosity-pressure properties, 3-12
Viscosity-shear properties, 3-13
permanent viscosity loss due to shear, 3-14
temporary viscosity loss due to shear, 3-13
test methods, 3-14
Viscosity-temperature
coefficient, 3-10
graphs, 4-22—4-29
properties, 3-8
ASTM viscosity-temperature charts, 3-8
ASTM slope, 3-8
test methods, 3-11
viscosity index, 3-10
Volatility, 1-8, 3-29
boiling point, 3-30
evaporation, 3-30
vapor pressure, 3-29

W

Water glycols, 4-10
Water-glycol fluid, 1-7
Wear
Almen tester, 3-49
bench-type friction and wear testers, 3-49
Cameron-Plint high-frequency friction test, 3-50
Falex tester, 3-49
four-ball tester, 3-50
lubrication factors, 3-48
mechanical factors, 3-48
test methods, 3-48
Timken tester, 3-49

Downloaded from http://www.everyspec.com

SUBJECT TERM (KEY WORD) LISTING

Additives
Bulk modulus
Chemical properties
Classification
Cloud point
Compatibility
Compressibility
Contamination
Density
Emulsion
Fire resistance
Flash point
Freezing point
Guidelines for selection
Lubrication properties
Neutralization number
Nonpetroleum base
Petroleum base
Physical properties
Pour point
Specifications
Storage
Temperature
Viscosity
Volatility

Custodians:
Army–ME
Navy–AS
Air Force–11

User activities:
Army–AL, AR, AT, AV, MI, MR, TE, TR
Navy–CG, CH, MC, OS, SA, SH, YD
Air Force–10, 79, 82, 84

Preparing activity:
Army–ME

(Project 9150-1118)