Downloaded from http://www.everyspec.com

ZZ-B-190C/GEN
November 13, 1981
SUPERSEDING
ZZ-B-190B/GEN
April 26, 1974

FEDERAL SPECIFICATION

BELTS, V: ENGINE ACCESSORY DRIVE; MINUS 40 deg. F.,

GENERAL SPECIFICATION FOR

This specification was approved by the Commissioner, Federal Supply Service, General Services Administration for use of all Federal agencies.

1. SCOPE AND CLASSIFICATION

1.1 Scope. This specification covers the general requirements for endless, V-type, engine accessory drive belts. Specific requirements for a particular belt are covered by the applicable detail specification sheet.

1.1.1 Federal specification coverage. Federal specifications do not include all varieties of V-belts as indicated by the title of the specification, or which are commercially available, but are intended to cover only those varieties which are suitable for Federal Government requirements. Other varieties, such as other cross sections, cannot be inspected by the tests specified herein and therefore cannot be procured under this specification.

1.2 Classification. Belts shall be of the following grades and nominal cross-section designations, as specified in the detailed specification sheet (see 6.2 and 6.3). Unless otherwise specified, grade A belts shall be supplied.

Grade A - Standard duty.
Grade B - Heavy duty.
0.380 nominal belt width by 5/16 nominal belt thickness.
0.500 nominal belt width by 13/32 nominal belt thickness.
11/16 nominal belt width by 13/32 nominal belt thickness.
3/4 nominal belt width by 7/16 nominal belt thickness.
7/8 nominal belt width by 1/2 nominal belt thickness.
1 nominal belt width by 9/16 nominal belt thickness.

2. APPLICABLE DOCUMENTS

2.1 The following documents, or the issue in effect on date of invitation for bids or request for proposal, form a part of this specification to the extent specified herein:

Downloaded from http://www.everyspec.com

Federal specifications:

PPP-B-601	- Boxes, Wood, Cleated Plywood.
PPP-B-621	- Boxes, Wood, Nailed and Lock Corner.
PPP-B-636	- Boxes, Shipping, Fiberboard.

Federal Standards:

FED-STD-123	- Marking for Shipment (Civil Agencies).

Military Specifications:

MIL-P-116	- Preservation, Method of

Military Standards:

MIL-STD-105	- Sampling Procedures and Tables for Inspection by Attributes.
MIL-STD-129	- Marking for Shipment and Storage.
MIL-STD-130	- Identification Marking of US Military Property
MIL-STD-294	- Visual Inspection Guide for Rubber V-Belts.
MIL-STD-1188	- Commercial Packaging of Supplies and Equipment.

(Copies of military specifications and standards required by contractors in connection with specific procurement functions should be obtained from the procuring activity or as directed by the contracting officer.)

2.2 Other publications. The following documents form a part of this specification to the extent specified herein. Unless a specific issue is identified, the issue in effect on date of invitation for bids or request for proposal shall apply.

SOCIETY OF AUTOMOTIVE ENGINEERS (SAE):

SAE Handbook

SAE J636 - V-Belt and Pulley

(Application for copies should be addressed to the Society of Automotive Engineers, 400 Commonwealth Drive, Warrendale, PA 15096).

UNIFORM CLASSIFICATION COMMITTEE, AGENT:

Uniform Freight Classification

(Application for copies should be addressed to the Uniform Classification Committee, 222 South Riverside Plaza, Chicago, IL 60606.)

Downloaded from http://www.everyspec.com

NATIONAL MOTOR FREIGHT TRAFFIC ASSOCIATION, INC., AGENT:

National Motor Freight Classification

(Application for copies should be addressed to the American Trucking Associations, Inc., Traffic Department, 1616 P. Street, NW, Washington, DC 20036.)

AMERICAN SOCIETY FOR TESTING AND MATERIALS (ASTM):

ASTM D-471 - Standard Test Method for Rubber Property-Effect of Liquids.

(Application for copies should be addressed to American Society for Test and Materials, 1916 Race Street, Philadelphia, PA 19103).

(Technical society and technical association specifications and standards are generally available for reference from libraries. They are also distributed among technical groups and using Federal agencies.)

3. REQUIREMENTS

3.1 Description. The belts shall be endless, having a trapezoidal cross section.

3.2 Qualification. The belts furnished under this specification shall be products which are qualified for listing on the applicable Qualified Products List (see 6.4).

3.3 Materials. Materials shall be as specified herein. Materials not specified shall be selected by the contractor and shall be such as to enable the V-belts to meet all the requirements of this specification (see 6.8).

3.3.1 Materials. Rubber shall be either natural rubber or synthetic.

3.3.2 Fabric. Fabric shall be woven or knit, natural, or synthetic fibers impregnated with rubber.

3.3.3 Cord. Cords shall be as specified herein, shall be prestretched, and shall be impregnated with a rubber compound.

3.3.3.1 Grade A. Cord for grade A belts shall be natural or synthetic fibers.

3.3.3.2 Grade B. Cord for grade B belts shall be polyester.

3.4 Construction.

3.4.1 Covers. Covers, if used, shall consist of one or more plies of stretchable fabric or bias cord, frictioned or impregnated for adhesion.

3.4.2 Splicing. Not more than two transverse splices shall be allowed in any ply of fabric within a length of 66 inches or less.

Downloaded from http://www.everyspec.com

3.4.3 Tension members. Tension members shall be uniformly spaced in a direction parallel to the direction of the load, and shall be imbedded in the belt structure.

3.4.4 Compression members. Compression members shall form the narrower trapezoidal portion of the belt in the section below the tension members and shall support the belt in the pulleys. The base that forms the inner circumference of the belt shall be plain, notched, or cogged.

3.5 Effective length. Unless otherwise specified herein, the effective lengths for each classification of belts shall be as shown in table I. When specified (see 6.2), belt effective lengths shall be in accordance with the applicable detail specification sheet.

TABLE I. Effective Belt lengths.[1]

Belt classification	Effective lengths
(Inch)	(Inches)
Nominal widths 0.380 and 0.500	20 thru 60, in 1-inch increments
11/16 and 3/4	25 thru 60, in 1-inch increments
	62 thru 70, in 2-inch increments
7/8	28 thru 60, in 1-inch increments
	62 thru 86, in 2-inch increments
1.00	28 thru 60, in 1-inch increments
	62 and longer, in 2-inch increments

[1] The effective belt length shall be determined as specified in 4.5.2.1 "Outside length," "outside circumference," or just "length" are designations which have no meaning with respect to this specification (see 6.6).

3.5.1 Effective length tolerance.

3.5.1.1 Single belts. The effective length tolerance for Grade A single belts, when tested as specified in 4.5.2.1, shall not exceed the center distance tolerances specified in table II. The effective length tolerance for grade B single belts, when tested as specified in 4.5.2.1, shall not exceed the center distance tolerances specified in table III.

TABLE II. Effective length tolerance, grade A.

Effective belt length	Tolerances on center distances	
	Plus	Minus
(Inches)	(Inch)	(Inch)
40 and less	1/8	5/32
Over 40 and through 50	1/8	3/16
Over 50 through 60	5/32	7/32
Over 60 through 80	3/16	9/32
Over 80 through 100	7/32	11/32

Downloaded from http://www.everyspec.com

TABLE III. Effective length tolerance, grade B.

Effective belt length, in.	Tolerance on pulley center distance, plus or minus, in.
50 and less	1/8
Over 50 through 60	5/32
Over 60 through 80	3/16
Over 80	7/32

3.5.1.2 Matched sets. When specified (see 6.2), belts shall be furnished in matched sets of the size and number of belts required. Belts of matched sets shall conform to the effective length tolerance specified in table II for grade A belts and table III for grade B belts, except that the difference in effective length, between test pulley centers, of the shortest and longest belt in any one matched set shall not exceed 1/16 inch for grade A belts, and shall not exceed the applicable value specified in table IV for grade B belts.

TABLE IV. Matching tolerances for sets of grade B belts.

Nominal Belt Width	Difference in Length Between Test Pulley Centers, In.
0.380	0.04
0.500	0.04
11/16	0.06
3/4	0.06
7/8	0.06
1.00	0.06

3.6 Electrical resistivity. The electrical resistivity, as measured between any pair of opposite electrodes after the belt is subjected to tension, shall be not more than 6 Megohms, when tested as specified in 4.5.2.2.

3.7 Oil-Resistance. When specified (see 6.2) the belt thickness shall increase no more than 20 percent after exposure to ASTM No. 3 oil, and shall decrease (Shrink) no more than 1 percent after exposure to ASTM No. 1 oil, when tested as specified in 4.5.2.3.

3.8 Rideout. When tested as specified in 4.5.2.4, the position of the top of the belt with respect to the top of the pulley groove (ride-out) shall be within the limits specified in table V.

Downloaded from http://www.everyspec.com

TABLE. V Rideout.

Nominal belt width	Rideout, plus or minus 1/32 inch
0.380	1/16
0.500	1/16
11/16	3/32
3/4	3/32
7/8	3/32
1	3/32

3.9 Resistance to temperature. The belts shall not crack, break, or require more torque to start or continue rotation than that specified in table VI when tested as specified in 4.5.2.5.

TABLE VI. Maximum torque requirements.

Nominal top width	Torque required to start (maximum)	Torque required to continue (maximum)
Less than 11/16	20 ft. lbs.	12.5 ft. lbs.
11/16 through 3/4	25 ft. lbs.	15.0 ft. lbs.
7/8 through 1	30 ft. lbs.	20.0 ft. lbs.

3.10 Resistance to fatigue. The belts shall not crack, break, or slip in excess of 8 percent after two permissible adjustments to compensate for slippage when tested as specified in 4.5.2.6.

3.11 Age. When specified (see 6.2), the age of the belts shall be not more than 12 months (4 quarters) old from the time of manufacture to the date of acceptance by the Government.

3.12 Marking.

3.12.1 Single belts. Unless otherwise specified (see 6.2), the belts shall be marked on the outside circumference in accordance with MIL-STD-130, except that the design activities identification as specified in MIL-STD-130 will not be required. In addition, each belt shall be marked with the nominal top width, effective length, the contractor's name (or trademark, or identification code) and the date of manufacture. The date of manufacture shall be shown by quarter and year (example 1Q80), or month and year (example Jan 80) or week and year (example 1-80). Ink imprinting or permanent molded marking is acceptable.

3.12.2 Matched sets. Each belt of a matched set shall be marked as specified in 3.12.1. In addition, all belts of a matched set shall be tied together. A tag or separate label shall include the following notice: "WARNING: THIS IS A MATCHED SET. DO NOT BREAK TIES EXCEPT AT INSTALLATION."

3.13 Workmanship. The belts shall contain no visible defects as specified in MIL-STD-294.

Downloaded from http://www.everyspec.com

4. QUALITY ASSURANCE PROVISIONS

4.1 Responsibility for inspection. Unless otherwise specified in the contract, the contractor is responsible for the performance of all inspection requirements as specified herein. Except as otherwise specified in the contract, the contractor may use his own or any other facilities suitable for the performance of the inspection requirements specified herein, unless disapproved by the Government. The Government reserves the right to perform any of the inspections set forth in the specification where such inspections are deemed necessary to assure supplies and services conform to prescribed requirements.

4.2 Classification of inspection. The inspection requirements specified herein are classified as follows:

(a) Qualification inspection (see 4.3).
(b) Quality conformance inspection (see 4.4).
(c) Inspection of preparation for delivery (see 4.6).

4.3 Qualification inspection.

4.3.1 Quantity of belts. For the purpose of qualification, no fewer than three belts of each grade and applicable belt width (see 6.2), manufactured by the same process, shall be subjected to the examination and tests specified herein.

4.3.2 Examination. Each belt shall be examined as specified in 4.5.1. Presence of one or more defects shall be cause for rejection of all belts.

4.3.3 Tests. Each belt shall be tested as specified in 4.5.2.1 through 4.5.2.6. Failure of any test shall be cause for rejection of all belts.

4.4 Quality conformance inspection.

4.4.1 Sampling. Sampling for examination and tests shall be in accordance with MIL-STD-105, Inspection Level S-3.

4.4.2 Examination. Samples selected in accordance with 4.4.1 shall be examined as specified in 4.5.1. AQL shall be 1.5 percent defective for major defects and 2.5 percent defective for minor defects. Major and minor defects are defined in MIL-STD-294.

4.4.3 Tests. Samples selected in accordance with 4.4.1 shall be tested as specified in 4.5.2.1 and 4.5.2.4. AQL shall be 4.0 percent defective.

4.5 Inspection procedure.

4.5.1 Examination. The belts shall be examined for visible defects as specified in MIL-STD-294.

Downloaded from http://www.everyspec.com

4.5.2 Tests.

4.5.2.1 Effective length. The test fixture shall consist of two test pulleys having dimensions as specified in table VII. One shall be a fixed pulley, and the other shall be a movable pulley which moves along a graduated scale (see figure 1). Place the belt on the test pulleys tensioned as specified in table VII, and rotate the belt two complete revolutions to seat the belt and equally divide the tension on each strand. Measure the distance between center-to-center of the test pulleys, and add the amount specified in table VII to twice the center distance to determine the effective length. Nonconformance to the length tolerance specified in table II or III, as applicable, or nonconformance of matched sets to 3.5.1.2 shall constitute failure of this test.

Downloaded from http://www.everyspec.com

TABLE VII. Measuring Pulley and V-Belt Measuring Requirements.

Nominal belt width	Nominal pulley[1] diameter	Nominal width of groove	Groove angle plus or minus 10 minutes	Minimum depth of groove	Ball or rod diameter	Diameter over balls or rods +/-0.002	Tension[2]	Amount to be added to two times center distance to get effective belt length
	d_1	W	A	D	d	d_2		
(Inch)	(Inches)	(Inch)	(Degrees)	(Inch)	(Inch)	(Inch)	(Pounds)	(Inches)
0.380	3.820	0.380	36	7/16	0.312	3.974	60	12
.500	3.820	.500	36	9/16	.438	4.134	60	12
11/16	3.820	.597	34	9/16	.500	4.078	60	12
3/4	3.820	.660	34	5/8	.562	4.148	80	12
7/8	4.775	.785	34	11/16	.688	5.247	100	15
1.00	4.775	.910	34	13/16	.812	5.391	120	15

[1] See Figure 1 for lettered pulley dimensions.
[2] Tension on each strand is one-half of amount shown.

Downloaded from http://www.everyspec.com

4.5.2.2 Electrical resistance.

4.5.2.2.1 Apparatus. The apparatus shall be an electronic-type ohmmeter with a nominal open circuit voltage of 500 volts dc, and having a range of 0 to 10 Megohms with an accuracy of plus or minus 5 percent.

4.5.2.2.2 Preparation. Clean one side wall of the belt of all foreign matter and the contact surface of the electrode with a clean dry cloth.

4.5.2.2.3 Electrode. The electrodes shall consist of two 0.625 inch (16 mm) diameter flat metal brass contacts. The electrodes shall be moistened and applied to only the driving surface of the belt. The electrodes shall be positioned on 8.5 inch (216 mm) centers or 180 deg. on any belt length of 20 inch (508 mm) or less.

4.5.2.2.4 Procedure. The test shall be conducted at room temperature of 70 deg. +/- 10 deg. F (21.1 +/- 5 deg. C) and a relative humidity of 60 +/- 10 percent. The contacts of the meter shall be applied to the electrodes with a force of 12.5 pounds (56 N). Measure the resistance between the electrodes. A resistance reading greater than 6 Megohms shall constitute failure of this test.

4.5.2.3 Oil-Resistance test. Three belt sections each 3 inches long, shall be immersed in ASTM Oil No. 1 and ASTM Oil No. 3 as cited in ASTM D-171, at a temperature of 158 deg. F for 22 hours (total - 6 sections). The thickness of each belt section shall be measured at the center and 1/2-inch from each end, before and after the immersion. The percent increase or decrease in thickness of any specimen shall be recorded as the average of the three readings for that specimen. Failure of any specimen to meet the requirements of 3.7 shall be cause for rejection.

4.5.2.4 Rideout. The rideout measurement shall be obtained during the effective-length measurement. With the belt mounted on the measurement pulleys under the applicable tension as specified in table V, place a straight edge across the top of the belt. Measure and record the distance between the bottom of the straight edge and the outer rim of the measuring pulley (see figure 1). A rideout measurement exceeding the tolerances specified in table V shall constitute failure of this test. This method of measuring the effective length is identical to the SAE method described in SAE J636 (see figure 1). Belt widths are approximate and belt angles are not specified because both may vary to meet the requirements of this specification. Tension on each strand is one-half the amounts shown.

4.5.2.5 Resistance to temperature. The dimensions of the pulleys for the general pulley arrangement shown in figure 2 shall be as shown in table VIII.

Downloaded from http://www.everyspec.com

TABLE VIII. Dimensions of pulleys for temperature test of grade A and B belts and fatigue test of grade A belts.

Nominal belt width	Diameter of pulley where specified groove width (without width tolerance) occurs		Groove		Angle	
	Driver and driven pulleys +/- 0.010	Tension pulley +/- 0.010	Width +/- 0.010	Depth (minimum)	Driver and driven pulleys +/- 30 minutes	Tension pulley +/- 30 minutes
	(Inches)	(Inches)	(Inch)	(Inch)	(Degrees)	(Degrees)
.380	4.75	2.75	.380	7/16	36	36
.500	5.00	3.50	.500	9/16	36	36
11/16	4.66	3.16	.597	9/16	36	34
3/4	4.91	3.29	.660	5/8	36	34
7/8	5.91	3.91	.785	11/16	36	34
1.00	6.91	4.54	.910	13/16	36	34

4.5.2.5.1 Procedure. Place the belt in the air oven in an unrestrained, horizontal position so that it does not contact the side walls of the test chamber. Maintain the temperature of the oven at 150 deg. plus or minus 2 deg. F for 12 hours. At the end of the 12-hour period, remove the belt from the oven and allow the belt to cool for 30 minutes at room temperature. Then install the belt on the general pulley arrangement as shown in Figure 2, and apply tension, as specified in table VII, by the use of tension weights. The tension weights may be applied as shown in Figure 2 or the pulley arrangement may be turned 90 degrees with the tension pulley at the bottom and the tension weights suspended from the tension pulley. Lock the tension pulley location, remove the tension weights from the belts, then place the assembly in the cold chamber at a temperature of minus 40 deg. plus or minus 2 deg. F for 12 hours. At the end of the 12 hour period, while the assembly is still at minus 40 deg. F plus or minus 2 deg. F rotate the pulleys by means of a torque wrench applied to the driver pulley until the belt has been rotated not less than two complete revolutions. Measure and record the torque required to start and the torque required to continue rotation; then remove the belt from the assembly and examine for evidence of cracking. Any visible evidence of cracking, or torque necessary to start and continue rotation in excess of the amount specified in table VI shall constitute failure of this test.

Downloaded from http://www.everyspec.com

4.5.2.6 Resistance to fatigue.

4.5.2.6.1 Apparatus. The apparatus for this test shall consist of the following:

(a) A torque-reaction-type dynamometer.
(b) A constant-speed motor.
(c) A means for setting the tension value specified in table IX on the tension pulley of a test fixture.
(d) Tachometer to indicate speed of driver pulleys and speed of driven pulleys.
(e) A governor which shall be arranged to automatically stop the motor drive when the speed of the driven pulley (on dynamometer) drops 8 percent below that of the driver pulley (on motor).

(f) Three pulleys arranged on a fixture as shown in Figure 2. Pulleys for the belt widths designated shall have dimensions as shown in table VIII or table IX as applicable.

4.5.2.6.2 Procedure. Install the belt on pulleys, tensioned as specified in table X or XI, as applicable, and run-in for a period of 5 minutes. Then fix the pulley centers, remove the tension weights from the belts, and continue the operation in an ambient air temperature of 70 deg. to 90 deg. F under the conditions specified in table X or XI as applicable, for 100 hours. If slippage exceeds 8 percent, restore the belt tension to the value specified in table X or XI, as applicable, and continue the test until the belt has failed or broken, or has completed the required hours of operation. Not more than two adjustments of tension shall be allowed after initial adjustment. No correction shall be made to dynamometer load to compensate for belt slippage. Breakage of the belt or tension adjustments greater than the specified number before completion of the test period shall constitute failure of this test.

Downloaded from http://www.everyspec.com

TABLE IX. Dimensions of pulleys for fatigue test of grade B belts.

Nominal belt width	Diameter of pulley where specified groove width (without width tolerance) occurs		Groove		Angle	
	Driver and driven pulleys +/- 0.010	Tension pulley +/- 0.010	Width +/- 0.010	Depth (minimum)	Driver and driven pulleys +/- 30 minutes	Tension pulley +/- 30 minutes
	(Inches)	(Inches)	(Inch)	(Inch)	(Degrees)	(Degrees)
.380	4.75	2.25	.380	7/16	36	36
*.380		2.50	.380	7/16	36	36
.500	5.00	2.75	.500	9/16	36	36
**.500		3.00	.500	9/16	36	36
11/16	4.66	3.16	.597	9/16	36	34
3/4	4.91	3.29	.660	5/8	36	34
7/8	5.91	3.91	.785	11/16	36	34
1.0	6.91	4.54	.910	13/16	36	34

* Notched or cogged.
** Plain base.

TABLE X. Fatigue test conditions for grade A belts.

Nominal belt width	Driver pulley speed	Dynamometer load	Tension weight at no load
	(rpm)	(hp)	(pounds)
.380	4,900	9.00	90
.500	4,700	12.00	120
11/16	4,900	7.75	78
3/4	4,700	8.50	85
7/8	3,900	10.25	103
1	3,350	12.00	120

Downloaded from http://www.everyspec.com

TABLE XI. Fatigue test conditions for grade B belts.

Nominal belt width	Belt type	Pulley diameters in.		Driver rpm	Belt effective length, in.	Horse-power loads	Tension weight at no load, lb.
		Driver and Driven	Tension				
0.380	Plain Base	4.75	2.50	4900	Under 40.0	9.0	90
0.380	Plain Base	4.75	2.50	4900	40.0 - 55.0	10.0	100
0.380	Plain Base	4.75	2.50	4900	55.0 and over	11.5	115
0.380	Notched or cog	4.75	2.25	4900	Under 40.0	9.0	90
0.380	Notched or cog	4.75	2.25	4900	40.0 - 55.0	10.0	100
0.380	Notched or cog	4.75	2.25	4900	55.0 and over	11.5	115
5.00	Plain Base	5.00	3.00	4700	Under 40.0	10.5	105
5.00	Plain Base	5.00	3.00	4700	40.0 - 55.0	12.0	120
5.00	Plain Base	5.00	3.00	4700	55.0 and over	13.0	130
5.00	Notched or cog	5.00	2.75	4700	Under 40.0	10.5	105
5.00	Notched or cog	5.00	2.75	4700	40.0 - 55.0	12.0	120
5.00	Notched or cog	5.00	2.75	4700	55.0 and over	13.0	130
11/16	Either Base	4.66	3.16	4900	Under 40.0	6.5	65
11/16	Either Base	4.66	3.16	4900	40.0 - 55.0	7.5	75
11/16	Either Base	4.66	3.16	4900	55.0 and over	8.5	85
3/4	Either Base	4.91	3.29	4700	Under 40	7.5	75
3/4	Either Base	4.91	3.29	4700	40.0 - 55.0	8.5	85
3/4	Either Base	4.91	3.29	4700	55.0 and over	9.5	95
7/8	Either Base	5.91	3.91	3900	Under 40.0	9.0	90
7/8	Either Base	5.91	3.91	3900	40.0 - 55.0	10.0	100
7/8	Either Base	5.91	3.91	3900	55.0 and over	11.0	110
1.0	Either Base	6.91	4.54	3350	Under 40.0	11.0	110
1.0	Either Base	6.91	4.54	3350	40.0 - 55.0	12.0	120
1.0	Either Base	6.91	4.54	3350	55.0 and over	13.0	130

Downloaded from http://www.everyspec.com

4.6 Inspection of preparation for delivery. An inspection shall be made to determine compliance with the requirements of Section 5. The sample unit shall be one shipping container fully prepared for delivery. Sampling shall be in accordance with MIL-STD-105. The inspection level shall be S-2 with an AQL of 4.0 expressed in terms of percent defective.

5. PREPARATION FOR DELIVERY

5.1 Packaging. Packaging shall be level A, B, or commercial, as specified (see 6.2).

5.1.1 Level A.

5.1.1.1 Unit packaging.

5.1.1.1.1 Belt set. All belts of a match set shall be tied together as specified in 5.1.1.2.2.

5.1.1.1.2 Single belts. No unit package is required.

5.1.1.2 Intermediate packaging.

5.1.1.2.1 Belt sets. Each belt set shall be preserved in accordance with MIL-P-116, method III, using a closed fitting box conforming to PPP-B-636, W6C, style optional. Minimum permissible length to be coiled shall be as specified in table XII. Waterproof closure and reinforcing of the box shall be in accordance with the appendix to PPP-B-636.

5.1.1.2.2 Single belts. Single belts of like description in the quantity specified (see 6.2) shall be preserved together, coiled and boxes waterproofed as specified in 5.1.1.2.1 for belt sets.

TABLE XII. Unitized Packaging

Nominal belt width	Minimum permissible belt lengths to be coiled[1]
(Inch)	(Inches)
.380	30
.500	34
11/16	38
3/4	40
7/8	46
1.00	52

[1] The coil diameter size shall be the contractor’s standard.

Downloaded from http://www.everyspec.com

5.1.2 Level B. Level B packing shall be as specified in 5.1.1.1.1 except that the box shall conform to PPP-B-636, class domestic, style optional and the waterproof sealing of the boxes shall not be required.

5.1.3 Commercial.

5.1.3.1 Military agencies. Commercial packaging shall be in accordance with MIL-STD-1188.

5.1.3.2 Civil agencies. The belts shall be packaged in accordance with normal commercial practice. The complete package shall be designed to protect the belts against damage during multiple shipments, handling, and storage.

5.2 Packing. Packing shall be level A, level B, or commercial, as specified (see 6.2).

5.2.1 Level A. The belts packaged as specified in 5.1, shall be packed in a close-fitting box conforming to PPP-B-601, overseas type, grade B, style optional or PPP-B-621, class 2, style optional. The boxes shall be closed and strapped in accordance with the appendix to the box specification. Strapping shall be zinc coated.

5.2.2 Level B. The belts, packaged as specified in 5.1, shall be packed in a close-fitting box conforming to PPP-B-636, V3c or V3s. The gross weight shall not exceed the weight limitation of the box specification. Closure and strapping shall be in accordance with method V of the appendix to the box specification.

5.2.3 Commercial.

5.2.3.1 Military agencies. The belts, packaged as specified in 5.1, shall be packed in accordance with MIL-STD-1188.

5.2.3.2 Civil agencies. Belts of like description, packaged as specified in 5.1, shall be packed in fiberboard boxes to insure delivery at destination provided for redistribution by the initial receiving activity; and be acceptable by common carrier in conformance with the National Motor Freight Classification and Uniform Freight Classification rules.

5.3 Marking.

5.3.1 Military. In addition to any special marking required by the contract, each belt’s interior container and shipping container shall be marked in accordance with MIL-STD-129, for level A or B. Commercial marking shall be in accordance with MIL-STD-1188.

5.3.2 Civil agencies. Interior packages and shipping container shall be marked in accordance with FED-STD-123.

Downloaded from http://www.everyspec.com

6. NOTES

6.1 Intended use. The belts covered by this specification are intended to be used on power transmission applications that require high-speed, small-pulley short-center drives, such as drives on internal combustion engines that transmit power to generators, pumps, fans, and other accessory equipment. This specification does not apply to the light duty or fractional horsepower belts of the 2L through the 5L cross-sectional designations, the industrial belts of the A through E cross-sectional designations, or the industrial narrow, 3V, 5V and 8V cross-sectional designations. These belts are intended for use in ambient temperatures down to minus 40 deg. F. If minus 65 deg. F is a requirement for a belt drive, use belts conforming to MIL-B-11040.

6.2 Ordering data. Purchasers should select the preferred options permitted herein and include the following information in procurement documents:

(a) Title, number, and date of this specification.
(b) Title, number and date of applicable detail specification sheet and part number of belt required (see 1.2).
(c) When belt effective length in accordance with the applicable specification sheet is required (see 3.5).
(d) When matched belt sets are required and size and number of belts in each matched set (see 3.5.1.2).
(e) When oil-resistance is required (see 3.7).
(f) When age of belts will be not more than 12 months (see 3.11 and 6.7)
(g) Degree of packaging and degree of packing (see 5.1 and 5.2).
(h) Quantity of belts per package (see 5.1.1.2.2 and 5.1.2).

6.3 Specification sheets. The following detailed specification sheets have been issued for V-belts covered by this specification:

ZZ-B-190/1	- Belts, V: Engine Accessory Drive (0.380 Inch Nominal Width).
ZZ-B-190/2	- Belts, V: Engine Accessory Drive (0.500 Inch Nominal Width).
ZZ-B-190/3	- Belts, V: Engine Accessory Drive (11/16 Inch Nominal Width).
ZZ-B-190/4	- Belts, V: Engine Accessory Drive (3/4 Inch Nominal Width)
ZZ-B-190/5	- Belts, V: Engine Accessory Drive 7/8 Inch Nominal Width).
ZZ-B-190/6	- Belts, V: Engine Accessory Drive (1 Inch Nominal Width).

Downloaded from http://www.everyspec.com

6.4 Qualification.

6.4.1 Belts procured as end items. With respect to products requiring qualification, awards will be made only for products which are at the time set for opening of bids, qualified for inclusion in the applicable Qualified Products List whether or not such products have actually been so listed by that date. The attention of contractors is called to this requirement, and manufacturers are urged to arrange to have the products that they propose to offer to the Federal Government tested for qualification in order that they may be eligible to be awarded contracts or orders for the products covered by this specification. The activity responsible for the Qualified Products List is the Commander, US Army Mobility Equipment Research and Development Command, Fort Belvoir, VA 22060, ATTN: DRDME-HM, and information pertaining to qualification of products may be obtained from that activity.

6.4.2 Belts procured as components of end items. When belts covered by this specification are a component of an end item being procured by the Government, the requirements of DAR 1-1107.2(b) will apply.

6.4.3 Samples for qualification. Qualification of belts 0.380 inch nominal top width will be considered as qualifying all belts of nominal top width of 0.500 inch or less. Qualification of belts of 11/16 inch nominal top width will be considered as qualifying all belts of nominal top width greater than 0.500 inch.

6.5 International standardization agreement. Certain provisions of this specification are the subject of international standardization agreement ABC 63. When amendment, revision, or cancellation of this specification is proposed which will effect or violate the international agreement concerned, the preparing activity will inform GSA so that appropriate reconciliation action may be taken through international standardization channels.

6.6 Effective length. The length for belts should always be expressed as "effective length" in procurement documents (see 3.5 and table I).

6.7 Age. Age of belts as specified in 3.11 should be imposed only on large quantity procurements of belts that are intended for replacement purposes over a period of several years.

Downloaded from http://www.everyspec.com

6.8 Recycled materials. It is encouraged that recycled material be used when practical as long as it meets the requirements of the specification (see 3.3).

MILITARY INTERESTS:

Custodians:
Army - ME
Navy - YD
Air Force - 99

Review activity:
DLA - CS

User activities:
Army - AV, AT, AR
Navy - MC, SH,

CIVIL AGENCIES COORDINATING ACTIVITY:
GSA - FSS

Preparing activity:
Army - ME

Project 3030-0135

U.S. GOVERNMENT PRINTING OFFICE: 1982 - 361-705/1313

Orders for this publication are to be placed with General Service Administration, acting as an agent for the Superintendent of Documents. See section 2 of this specification to obtain extra copies and other documents referenced herein.

Downloaded from http://www.everyspec.com

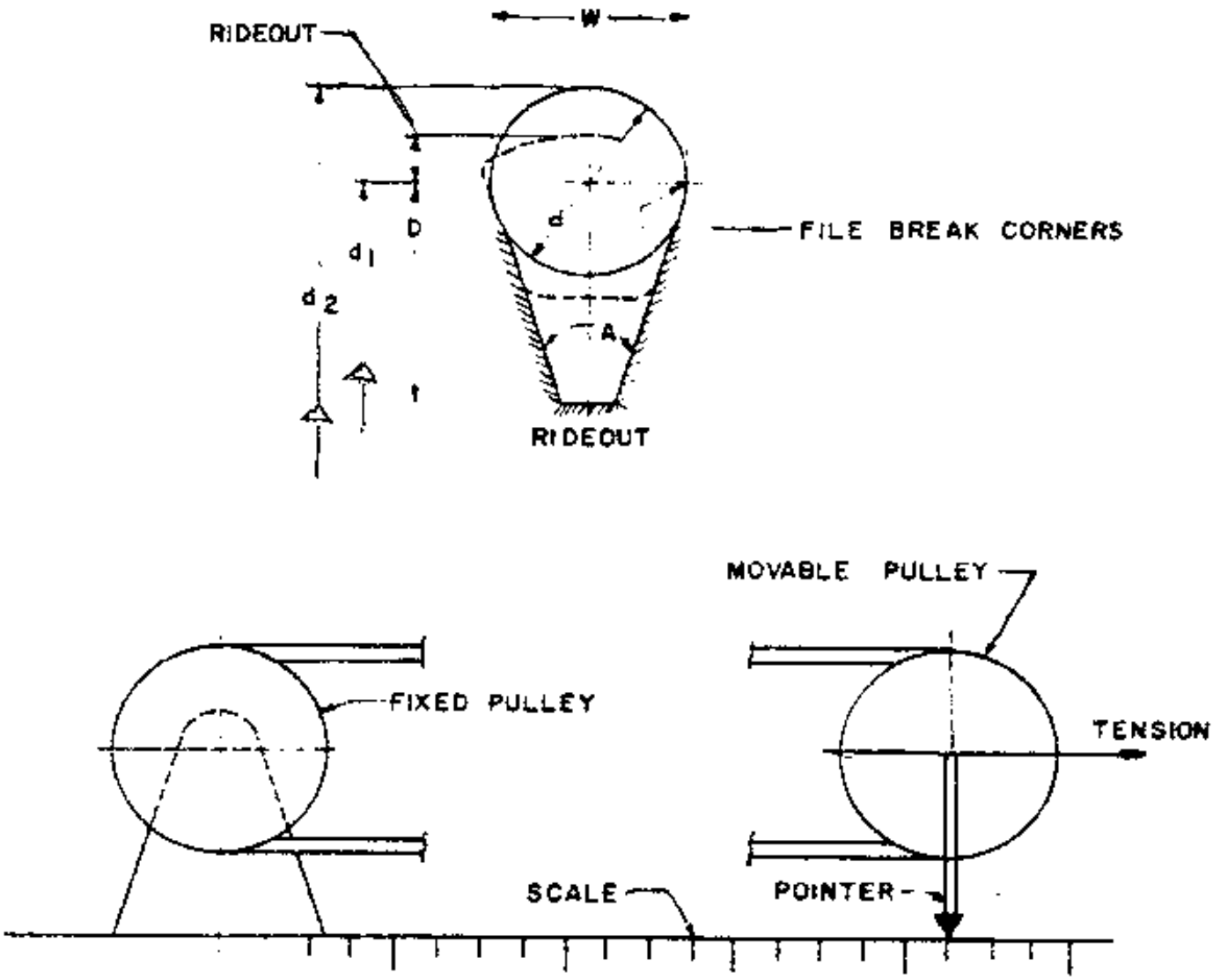

FIGURE 1. TEST FIXTURE AND PULLEY FOR DETERMING BELT EFFECTIVE LENGTH.

Downloaded from http://www.everyspec.com

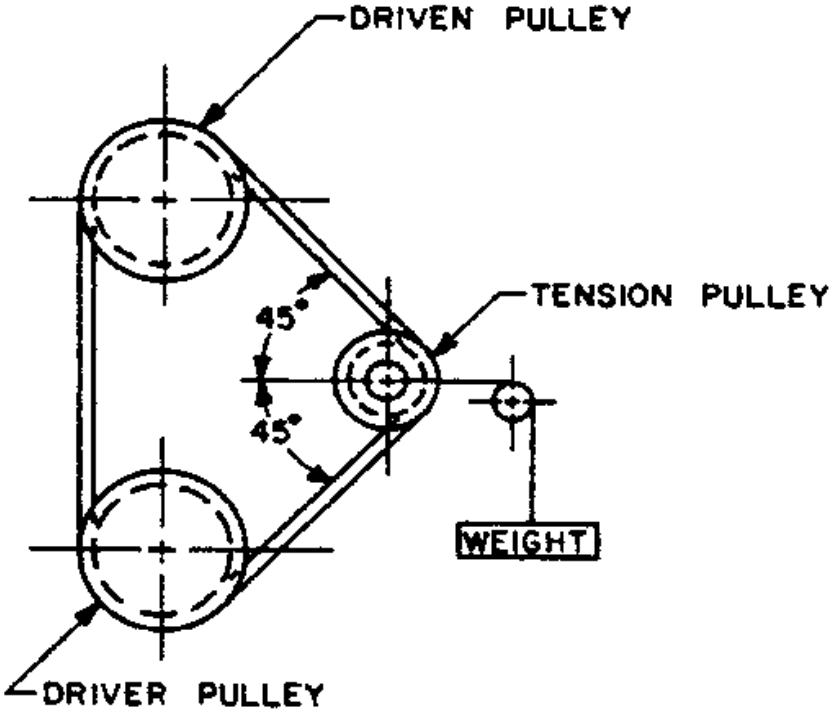

FIGURE 2. GENERAL PULLEY ARRANGEMENT FOR LOW TEMPERATURE AND FATIGUE TESTS

Downloaded from http://www.everyspec.com

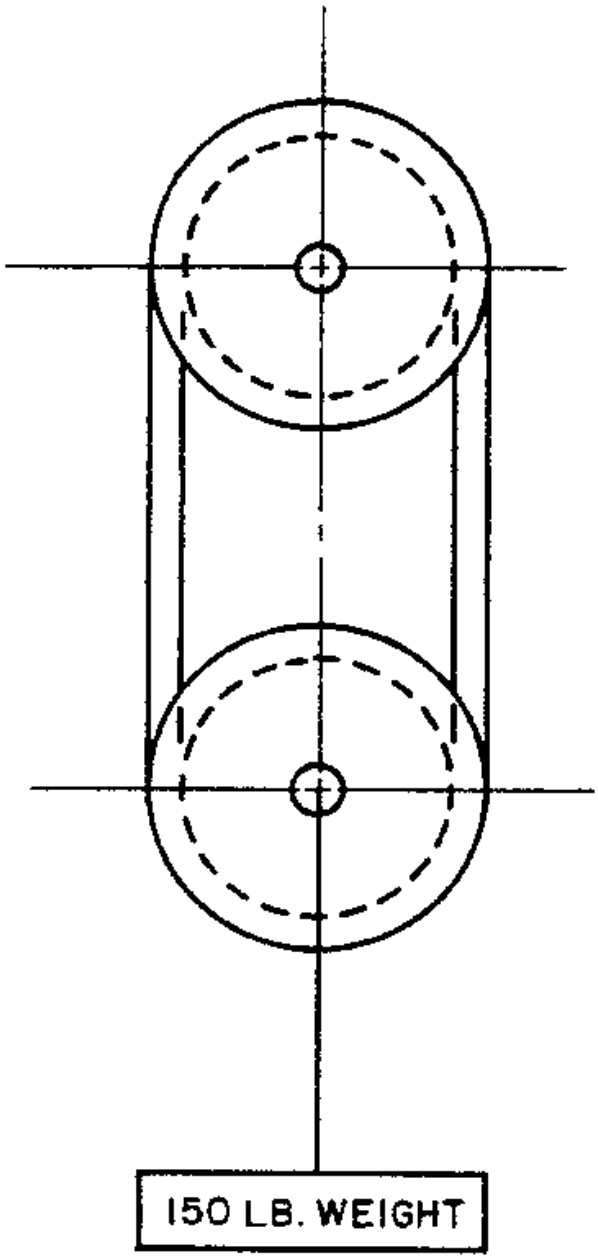

FIGURE 3. Tensioning of belt for electrical conductance test.

Downloaded from http://www.everyspec.com

INCH-POUND

NOTICE
OF VALIDATION

ZZ-B-190C/GEN
NOTICE 1
26 May 1989

MILITARY SPECIFICATION

BELTS, "V": ENGINE ACCESSORY DRIVE; MINUS
40 deg. F., GENERAL SPECIFICATION FOR

ZZ-B-190C/GEN, dated 13 November 1981, has been reviewed and determined to be valid for use in acquisition.

Custodians:
Army - AT
Navy - YD
Air Force - 99

Preparing activity:
Army - AT

AMSC N/A

FSC 3030

DISTRIBUTION STATEMENT A. Approved for public release; distribution is unlimited.