TT-R-248B
October 29, 1981
SUPERSEDING
Fed. Spec. TT-R-248A
January 17, 1967

FEDERAL SPECIFICATION

REMOVER, PAINT AND LACQUER, SOLVENT TYPE

This specification was approved by the Commissioner, Federal Supply Service, General Service Administration, for the use of all Federal Agencies.

1. SCOPE

1.1 Scope. This specification covers a nonflammable, water rinsable, solvent type paint and lacquer remover (see 6.1).

2. APPLICABLE DOCUMENTS

2.1 The following documents, of the issue in effect on date of invitation for bids or request for proposal, form a part of this specification to the extent specified herein.

Federal Specifications:

P-C-444	-Cleaning Compound, Solvent Soluble, Grease Emulsifiying.
QQ-A-250/4	-Aluminum Alloy 2024, Plate and Sheet.
QQ-A-250/5	-Aluminum Alloy Alclad 2024, Plate and Sheet.
QQ-A-250/13	-Aluminum Alloy Alclad 7075, Plate and Sheet.
QQ-M-44	-Magnesium Alloy Plate and Sheet (AZ31B).
QQ-P-416	-Plating, Cadmium (Electrodeposited).
TT-E-489	-Enamel, Alkyd, Gloss (For Exterior and Interior Surfaces).
TT-P-1757	-Primer Coating, Zinc Chromate, Low-Moisture-Sensitivity.
TT-T-291	-Thinner, Paint, Mineral Spirits, Regular and Odorless.
LLL-P-400	-Pine Oil.
PPP-B-636	-Boxes, Shipping, Fiberboard.
PPP-D-729	-Drums, Shipping and Storage, Steel 55 Gallon (208 Liters).
PPP-P-704	-Pail, Metal (Shipping, Steel, 1 through 12 Gallons).

Federal Standards:

Fed. Test Method Std. No. 141	-Paint, Varnish, Lacquer and Related Materials, Methods of Inspection, Sampling and Testing.
Fed. Std. No. 313	-Material Safety Data Sheets, Preparation and the Submission of.

(Activities outside the Federal Government may obtain copies of Federal specifications, standards, and commercial item descriptions, as outlined under General Information in the Index of Federal Specifications, Standards, and Commercial Item Descriptions. The Index, which includes cumulative bimonthly supplements as issued, is for sale on a subscription basis by the Superintendent of Documents, U.S. Government Printing Office, Washington, DC 20402.

(Single copies of this specification and other Federal specifications, standards, and commercial item descriptions required by activities outside the Federal Government for bidding purposes are available without charge from General Services Administration Business Service Centers in Boston; New York; Philadelphia; Washington, DC; Atlanta; Chicago; Kansas City, MO; Fort Worth; Houston; Denver; San Francisco; Los Angeles; and Seattle, WA.

(Federal Government activities may obtain copies of Federal specifications, standards, commercial item descriptions, and the Index of Federal Specifications, Standards, and Commercial Item Descriptions from established distribution points in their agencies.)

Military Specifications:

MIL-M-3171	-Magnesium Alloy, Processes for Pretreatment and Prevention of Corrosion on.
MIL-C-5541	-Chemical Conversion Coating on Aluminum and Aluminum Alloys.
MIL-T-6096	-Thinner, Cellulose Acetate Butyrate Dope.
MIL-H-6875	-Heat Treatment of Steels (Aircraft Practice), Process for.
MIL-S-7952	-Steel, Sheet and Strip, Uncoated, Carbon (1020 and 1025) (Aircraft Quality).
MIL-P-7962	-Primer Coating, Cellulose-nitrate Modified Alkyd Type, Corrosion-inhibiting, Fast-drying (For Spray Application over Pretreatment Coating).
MIL-C-8514	-Coating Compound, Metal Pretreatment, Resin-acid.
MIL-A-8625	-Anodic Coatings, for Aluminum and Aluminum Alloys.
MIL-T-9046	-Titanium and Titanium Alloy, Sheet, Strip and Plate.
MIL-L-19537	-Lacquer, Acrylic-nitrocellulose Gloss (For Aircraft Use).
MIL-I-22590	-Impregnated Wadding, Metal Polish.
MIL-P-23377	-Primer Coating: Epoxy Polyamide, Chemical and Solvent Resistant.
MIL-C-43616	-Cleaning Compound, Aircraft Surface.
MIL-E-50011	-Ethanolamines (Monoethanolamine, Diethanolamine and Triethanolamine) Technical.
MIL-L-81352	-Lacquer, Acrylic (For Naval Weapons Systems).

Military Standards:

MIL-STD-105	-Sampling Procedures and Tables for Inspection by Attributes.
MIL-STD-129	-Marking for Shipment and Storage.
MS24694	-Screw, Machine, Flat Countersunk Head, 100 Degree, Structual, Cross Recessed, UNC-3A and UNF-3A.

Air Force - Navy Aeronautical Standards:

AN315-3R	-Nut, Plain, Airframe.
AN960-10	-Washer, Flat.

(Copies of Military Specifications and Standards required by contractors in connection with specific procurement functions should be obtained from the procuring activity or as directed by the contracting officer.)

Laws and Regulations:

Code of Federal Regulations

CFR, Title 49, 100-199 - Transportation.

(The Code of Federal Regulations (CFR) and the Federal Register (FR) are sold on subscription basis by the superintendent of Documents, U. S. Government Printing Office, Washington, DC 20402. When indicated, reprints of certain regulations may be obtained from the Federal Agency responsible for issuance thereof.)

2.2 Other publications. The following documents form a part of this specification to the extent specified herein. Unless a specific issue is identified, the issue in effect on date of invitation for bids or request for proposal shall apply.

National Motor Freight Traffic Association, Inc., Agent:

National Motor Freight Classification.

(Application for copies should be addressed to the American Trucking Association, Inc., Traffic Department, 1616 P Street, N.W., Washington, DC 20036.)

Uniform Classification Committee, Agent:

Uniform Freight Classification.

(Application for copies should be addressed to the Uniform Classification Committee, Room 1106, 222 South Riverside Plaza, Chicago, IL 60606.)

American Iron and Steel Institute (AISI):

4340	-Steel.

(Application for copies should be addressed to the American Iron and Steel Institute, 1000 16th Street, N.W., Washington, DC 20036.)

3. REQUIREMENTS

3.1 Qualification. The paint remover furnished under this specification shall be a product which is qualified for listing on the applicable qualified products list at the time set for opening of bids (see 4.3 and 6.3).

3.2 Material. The material covered by this specification shall be a paint remover consisting of organic solvents, evaporation retarders and other ingredients to produce a satisfactory product.

3.2.1 Composition. The formulation of the paint and lacquer remover shall be optional with the manufacturer, except that it shall contain no abrasives, gritty material, inert fillers, phenol, cresol, creosote oil, cresylic acid or their derivatives, benzene, carbon tetrachloride, perchloroethylene, trichloroethylene, dichloroethylene or any other chlorinated solvents which may prove dangerously corrosive or toxic under application conditions, and shall be restricted by other requirements specified herein.

3.3 Toxicity. The product in operation shall not produce obnoxious vapors, in such concentrations as to become an annoyance or a medical hazard to personnel when used in accordance with the directions specified herein. The manufacturer shall certify that the paint and lacquer remover contains no substance known to be toxic to the user under normal conditions of use. Material safety data sheets shall be prepared and submitted in accordance with Fed. Std. No. 313, one copy of which shall be forwarded to the preparing activity of the specification.

3.4 Uniformity of action. The paint remover, when applied as specified in 4.5.1, shall blister the test enamel in an overall uniform manner. There shall be no areas, of 1/2 square inch (1.6 square centimeter) or more, free of blisters.

3.5 Consistency. When tested as specified in 4.5.2, the paint remover as received shall flow to a point within the 18 to 23 cm marks in 5 minutes.

3.6 Flammability. When subjected to the test specified in 4.5.3, the paint remover shall not continue to burn longer than 3 seconds after removal of the flame.

3.7 Effects on metals. There shall be no discoloration or corrosion of any metal listed herein when tested as specified in 4.5.4.1 through 4.5.4.3.

3.8 Accelerated storage stability and appearance. After being stored undisturbed for 6 days in a dark place, the paint remover shall experience no more than 5 percent by volume of phase separation. The remover, when tested for stability as specified in 4.5.5, shall not polymerize nor separate. The steel strip shall show no evidence of pitting, corrosion nor etching. After being tested for stability, the remover shall be capable of stripping the finish from test panels, prepared and tested in accordance with the test for paint stripping efficiency (see 4.5.6), as well as or better than a sample of the original (unexposed) test sample similarly tested.

3.9 Paint stripping efficiency. The remover shall strip aircraft paint finishes as well as or better than the control formula product when tested as specified in 4.5.6.

3.10 Refinishing properties of stripped surfaces. Following the stripping operation, the paint remover shall leave a surface suitable for refinishing without further preparation (see 4.5.7).

3.11 Volatility. The volatility of the paint remover shall not exceed the volatility of distilled water when tested under the conditions specified in 4.5.8.

3.12 Rinsability. When tested as specified in 4.5.9, the paint remover on anodized aluminum alloy panels shall be rinsable with water. Water rinsing of the paint remover from the surface shall render the anodized aluminum alloy panel surface suitable for painting after drying.

3.13 Carbon removal properties. When tested as specified in 4.5.10, the paint remover shall exhibit carbon removal properties comparable to a solution of one part of the carbon remover control formula and four parts water.

3.14 Storage stability. The remover, when stored as specified in 4.5.11, shall show no visible evidence of deterioration. It shall, after storage and subjection to all tests except accelerated storage stability, meet all the requirements of this specification for which it is tested with the exception of the paint stripping efficiency test. In the paint stripping efficiency test, the panels shall be stripped of at least 75 percent of the finish.

3.15 Service test. When required by the qualifying activity, the paint remover shall be tested as specified in 4.5.12 and shall show satisfactory performance in actual use.

3.16 Workmanship. The remover shall be a liquid having a uniform and homogeneous appearance and shall not cake, clot or gel at room temperature. The component ingredients shall be intimately blended and processed as required in accordance with the best commercial practice for a high quality material.

4. QUALITY ASSURANCE PROVISIONS

4.1 Responsibility for inspection. Unless otherwise specified in the contract, the contractor is responsible for the performance of all inspection requirements as specified herein. Except as otherwise specified in the contract, the contractor may use his own or any other facilities suitable for the performance of the inspection requirements specified herein, unless disapproved by the Government. The Government reserves the right to perform any of the inspections set forth in the specification where such inspections are deemed necessary to assure supplies and services conform to prescribed requirements.

4.2 Classification of inspections. The inspection requirements specified herein are classified as follows:

a. Qualification inspection (see 4.3).
b. Quality conformance inspection (see 4.4).

4.2.1 Toxicological data and formulations. The contractor shall furnish the toxicological data and formulations required to evaluate the safety of the paint remover for the proposed use. A statement of the complete formulation of the material shall be furnished. The statement shall include the chemical name and the percent of each ingredient.

4.2.2 Inspection conditions. Unless otherwise specified, all inspections shall be performed in accordance with the test conditions specified in Fed. Test Method Std. No. 141.

4.3 Qualification inspection. The qualification inspection shall consist of all the examinations and tests required under this specification.

4.3.1 Retention of qualification. In order to retain qualification of a product approved for listing on the Qualified Products List (QPL), the manufacturer shall verify by certification to the qualifying activity that the manufacturer's product complies with the requirements of this specification. The time of periodic verification by certification shall be in two-year intervals from the date of original qualification. The Government reserves the right to re-examine the qualified product whenever deemed necessary to determine that the product continues to meet any or all of the specification requirements.

4.3.2 Qualification samples. The qualification sample shall consist of two gallons of paint remover contained in two 1-gallon glass containers. Samples shall be forwarded to the Supply Officer, Naval Air Development Center, Warminster, PA 18974, ATTN: Director, Aircraft and Crew Systems Technology Directorate, Code 60622. Samples shall be plainly identified by securely attached durable tags with the following information:

Sample for qualification inspection
Remover, Paint and Lacquer, Solvent Type
Manufacturer's formula no.
Date compounded
Manufacturer's name
Batch or lot number
Submitted by (name) (date) for qualification inspection in accordance with the requirements of specification TT-R-248B under authorization of (reference authorizing letter)

4.3.2.1 Service test samples. Service test samples shall consist of 150 gallons of paint remover contained in thirty 5-gallon (18.9-liter) steel pails conforming to PPP-P-704, type I, class 3. No overpacking is required. Samples shall be forwarded in accordance with instructions contained in the authorizing letter granting service test which will be sent to the manufacturer on satisfactory completion of all laboratory tests.

4.3.3 Inspection report. The manufacturer shall submit a report, in duplicate, to accompany the qualification inspection sample. This report shall include the results of the manufacturer's tests, reported quantitatively, where applicable, in the units specified for all of the requirements specified herein, except storage stability. Tests not conducted due to lack of special test facilities or materials shall be so noted in the report.

4.4 Quality conformance inspection. The quality conformance inspection of the paint remover shall consist of all the examinations under this specification and the following tests:

Volatility
Flammability
Effects on metals (4.5.4.1 only)
Accelerated storage stability and appearance
Paint stripping efficiency
Rinsability

In addition, the material may be subjected to any other tests, specified herein, considered necessary to determine conformance with the requirements of this specification.

4.4.1 Lot formation. A lot shall consist of all the paint remover produced by one manufacturer, at one plant, from the same materials, and under essentially the same conditions provided the operation is continuous and does not exceed 24-hours. In the event the process is a batch operation, each batch shall constitute a lot (see 6.4).

4.4.2 Quality conformance test samples. Quality conformance test samples shall be selected in accordance with Fed. Test Method Std. No. 141, except that the sample shall consist of at least two 1-gallon (3.78-liters) glass container of paint remover. The applicable test methods of Fed. Test Method Std. No. 141 shall be used throughout this specification where test methods of Fed. Test Method Std. No. 141 are specified. Each sample shall be clearly identified by the manufacturer's formula number as specified in 4.3.2. The tests shall be performed in duplicate, one determination from each sample. Where applicable, the average of the two determinations shall be reported as the test results. The lot shall be unacceptable if any test result fails to meet the requirement. The manufacturer shall furnish with each lot a ceritificate to the effect that the material has been processed in the same manner and degree using the same base ingredients as the approved qualification sample.

4.4.3 Examination for net content. A random sample of filled containers shall be selected from each lot in accordance with MIL-STD-105 at Inspection Level I and an acceptable quality level (AQL) of 2.5 percent defective to verify conformance to the requirement for content. The sample unit for this examination shall be one filled unit container.

4.4.4 Examination of preparation for delivery. An examination shall be made to determine if the packaging, packing and marking comply with the requirements of section 5 of this specification. The sample unit shall be one shipping container fully prepared for delivery. Each sample unit shall be examined for the defects listed below. The lot size shall be the number of shipping containers in the lot. The examination shall be in accordance with MIL-STD-105, inspection level S-2 and an acceptable quality level (AQL) of 2.5 defects per hundred units.

Examine	Defect
Material	Not as specified.
Container	Evidence of leakage, bulging or distortions. Not as specified.
Marking	Missing, incorrect, illegible. Improper size, location or method of application.

4.5 Test methods.

4.5.1 Uniformity of action.

4.5.1.1 Preparation of panel. On a clean scratch free glass panel, 4 by 10 by 1/16 inch (10.16 by 25.4 by 0.159 cm), apply 3/4 inch (1.91 cm) wide masking tape along the 10 inch (25.4 cm) edges. The unmasked area, 2-1/2 by 10 inches (6.35 by 25.4 cm), shall be coated with a 1 mil film of white enamel conforming to TT-E-489,

class A. After the enamel has dried for at least 18 hours, the masking tape shall be removed and the panel placed on a rack or suitable device with the 10 inch (25.4 cm) dimension set at an angle of 60° with the horizontal.

4.5.1.2 Procedure. The thoroughly mixed paint remover shall be poured from a glass-stoppered flask upon the surface of the enamel coated panel. The lip of the flask shall be drawn over the panel across and back in a line parallel and near the upper edge and the remover allowed to drain and react on the enamel coating for 15 minutes. The panel shall then be removed from the rack and the effects of the remover observed. The panel shall be examined from the reverse side, with the aid of transmitted light, for distribution of blisters and presence of unblistered areas.

4.5.2 Consistency. The consistency of the paint remover shall be determined with a consistometer (Central Scientific Company Catalog No. 24925 or equivalent type of instrument).

4.5.3 Flammability.

4.5.3.1 Preparation of panel. One end of a clean anodized aluminum alloy panel, 4 by 3/4 inch (10.16 by 1.91 cm), shall be held at an angle of approximately 45°. The remover shall be poured along the upper edge of the panel, allowing it to drain freely over the surface. Remover settling on the reverse side of the panel shall be wiped clean before proceeding with the test.

4.5.3.2 Procedure. A microburner flame, not exceeding 3/16 inch (0.476 cm) in length, shall be passed within a 2 second period, back and forth along the lower edge of the panel. This operation shall be repeated three times at 3 second intervals. If the remover ignites, the burner flame shall be removed and observation shall be made to ascertain whether the remover continues to burn. The above procedure shall be repeated on another similarly prepared panel except that it shall be placed in an oven for 15 minutes at 45° ± 3°C (113° ± 5.4°F). The panel shall then be removed from the oven and subjected to the flame test.

4.5.4 Effects on metals.

4.5.4.1 Single panel corrosion test.

4.5.4.1.1 Preparation of test panels. Test panels 1 by 6 by 0.05 inches (2.54 by 15.24 by 0.127 cm) shall be made from each of the metals specified in table I. The panels shall be bent to form an angle of 45 degrees, approximately 1-1/4 inches (3.18 cm) from the end of the panel, to serve as a holder on the rack. The panels shall then be cleaned in a beaker of hot mineral spirits conforming to TT-T-291 by using a surgical gauze swab. The panels shall then be rinsed in hot mineral spirits, boiled in 95 percent methanol, and finally, boiled in absolute methanol. In handling the panels, care should be exercised to avoid fingerprint markings.

TABLE I. Metals for corrosiveness test.

Metal	Specification	Surface	Specification
Aluminum clad	QQ-A-250/5		
Aluminum alloy	QQ-A-250/13		
Aluminum alloy	QQ-A-250/4	Anodized	MIL-A-8625
Steel	MIL-S-7952	Polished	

TABLE I. Metals for corrosive test. - Continued

Metal	Specification	Surface	Specification
Steel	MIL-S-7952	Cadmium plated	QQ-P-416
Magnesium alloy	QQ-M-44 (condition H)	Chrome pickled	MIL-M-3171 (type I)
Titanium alloy 6Al-4V	MIL-T-9C46		

4.5.4.1.2 Procedure. Each panel shall be completely immersed in the paint remover for 1 minute, removed, and placed on a rack or other suitable device, so that the long dimension forms a 60° angle with the horizontal, then placed in an oven maintained at 38° ± 3°C (100.4° ± 5.4°F) for a period of 48 hours. The panels shall then be removed and immediately placed in a desiccator for 48 hours. Prior to the test, the desiccator shall be cleaned and the lower portion filled with distilled water after which it shall be closed and conditioned at 21° ± 3°C (69.8° ± 5.4°F). During the test, the desiccator shall be kept tightly sealed and in an area maintained at 21° ± 3°C (69.8° ± 5.4°F). At the end of the 48-hour period, the panels shall be removed, rinsed with water and brushed, if necessary, until free from paint remover residues. The panels shall then be cleaned with acetone and examined for discoloration or evidence of corrosion.

4.5.4.2 Corrosion test for dissimilar metals.

4.5.4.2.1 Preparation of tests panels. Ten test panels 3 by 4 inches (7.62 by 10.16 cm) and of any convenient thickness, unless specified, shall be prepared from the following metals:

Three each - aluminum 250/13 alloy 7075, QQ-A-250/13, T-6 condition (0.125 inch (0.32 cm) thick).

Two each - magnesium alloy, QQ-M-44 (AZ31B-H24), treated in accordance with MIL-M-3171, type I.

Two each - steel, MIL-S-7952, cadmium plated in accordance with QQ-P-416.

Three each - titanium alloy (6 Al-4V) (0.063 inch (0.16 cm) thick).

The panels shall be cleaned in accordance with 4.5.4.1.1. The size and placement of holes required for coupling shall be in accordance with figure 1. The panels shall be positioned and assembled in accordance with figure 2 and coupled with cadmium plated fasteners, nuts and washers as indicated below:

a. 7075-T6 aluminum to magnesium fastened with MS24694-10 screws heat treated in accordance with MIL-H-6875, 100° countersunk structure, 2330 alloy with screws, nuts and washers (AN960-10) cadmium plated in accordance with QQ-P-416.

b. 7075-T6 aluminum to cadmium plated steel fastened same as a.

c. 7075-T6 aluminum to 6 Al-4V titanium fastened same as a.

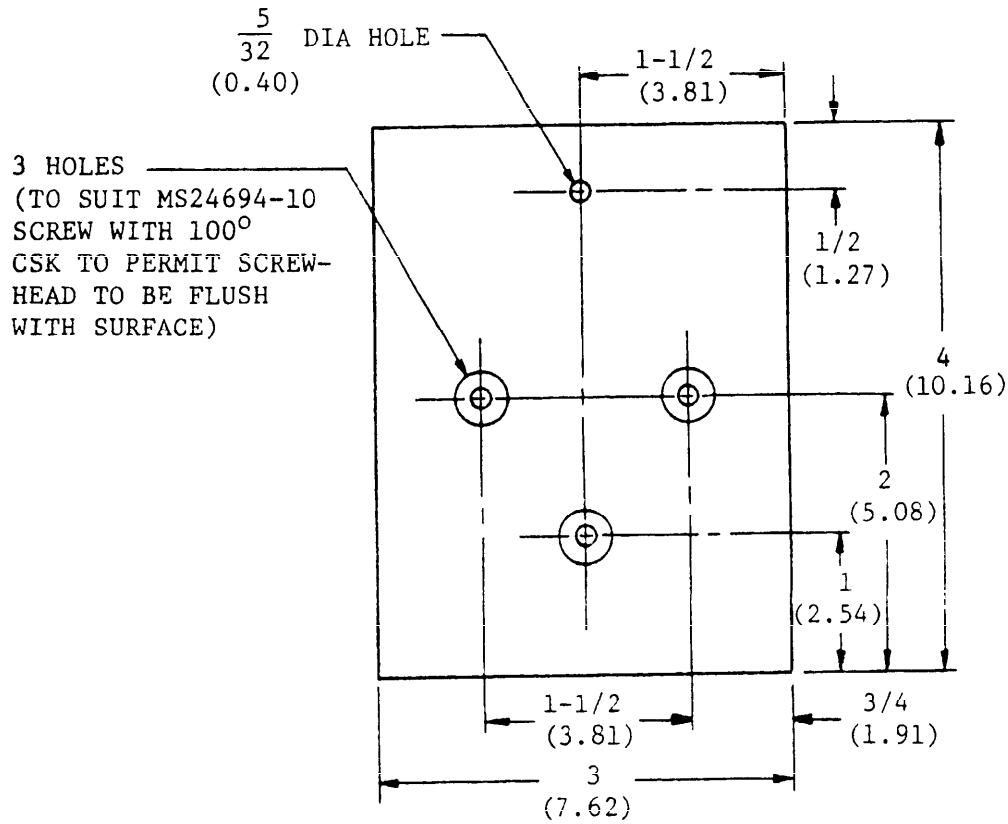

NOTES:

1. Dimensions in inches (CM).

2. Unless otherwise specified, dimensions shown shall be nominal, except that tolerances for the screw holes will be within the limits that will permit assembly of the panels as shown in Figure 2.

3. The three holes in the second panel of the couple shall be positioned to allow for a 1-inch overlap when connected. (See figure 2.)

FIGURE 1. Dimensions for dissimilar metal test panels.

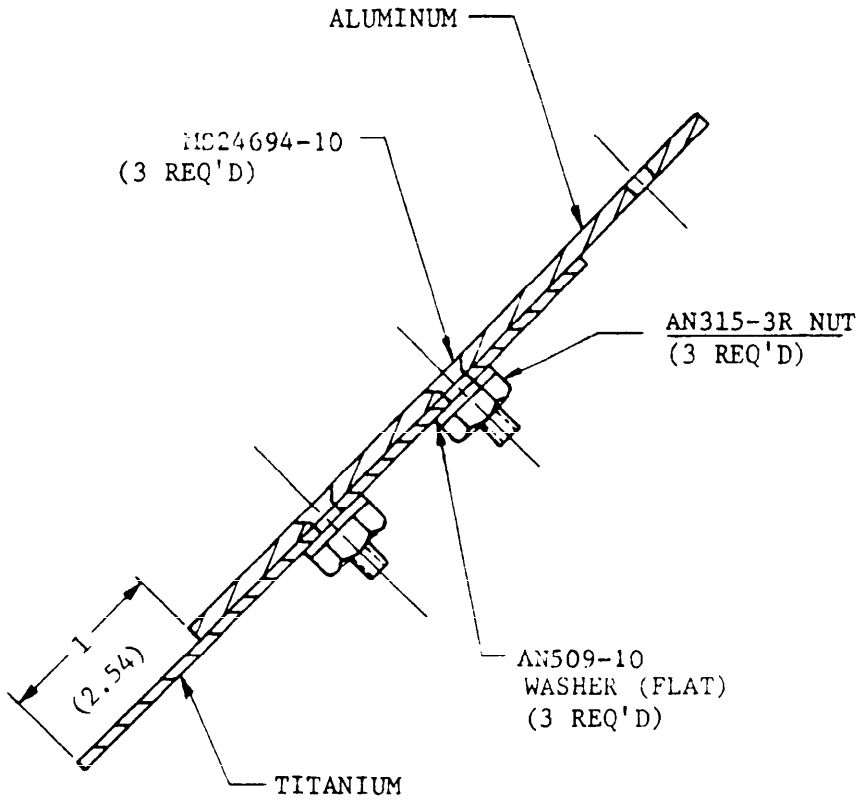

NOTE: DIMENSIONS IN INCHES (CM)

FIGURE 2. Coupling of dissimilar metal test specimens.

d. 6Al-4V titanium to cadmium plated steel fastened same as a.

e. 6Al-4V titanium to magnesium fastened same as a.

These bimetallic couples shall be joined with a 0.01 inch (0.025 cm) shim insert under one corner. The assemblies using fasteners shall be tightened with a torsion screwdriver, to 6-inch-pounds torque. (The screwdriver should be a 0 to 12 inch-pound torque type, as manufactured by Apco-Mossberg Co., Attleboro, MA 02703, or equivalent.)

4.5.4.2.2 Procedure. The coupled panels shall be completely immersed in the paint remover. After one hour, they shall be removed and placed in an oven maintained at 38° ± 3°C (100.4° ± 5.4°F) for a period of 48-hours. The panels shall then be removed and immediately suspended vertically for 48-hours in a desiccator. Prior to the test, the desiccator shall have been cleaned and the lower portion filled with distilled water after which it shall be closed and conditioned at 21° ± 3°C (69.8° ± 5.4°F). During the test, the desiccator shall be kept tightly sealed and in an area maintained at 21° ± 3°C (69.8° ± 5.4°F). At the end of the 48-hour period, the panels shall be removed, disassembled, washed with water, and cleaned with acetone. The individual panels shall then be inspected for pitting, etching and corrosion products. (Slight surface etching under the washers on magnesium panels treated in accordance with MIL-M-3171, type I, the total not to exceed 1/8 inch (0.32 cm) in diameter, shall not be cause for rejection.)

4.5.4.3 Notched C-ring tests.

4.5.4.3.1 Specimen preparation. Four notched C-ring specimens (AISI 4340 steel) shall be prepared from tubing (or suitable bar stock) and heat treated to an average strength level of 230,000 psi (1.6×10^9 Pa) and finished to the final dimensions shown in Figure 3.

4.5.4.3.2 Test procedure. The rings are cadmium plated for 2 minutes at 50 amperes per square foot. Following plating, the specimens are baked for 24 hours at 190° ± 3°C (374° ± 5.4°F). These baked rings stressed to 75 percent of their notched tensile strength are completely immersed in the test sample for one minute. The rings are then removed and allowed to stand in air for the required 100-hour testing time. No rinse of any kind is used to clean off the rings after dipping. The rings shall not break during the 100-hour testing period.

4.5.5 Accelerated storage stability and appearance test.

4.5.5.1 Preparation of test sample. A 5-ounce (141.75 g) portion of well shaken remover shall be poured into each of two chemically clean 12-ounce (354.9 ml) pressure resistant clear glass bottles and carefully capped. The bottles shall be approximately 9-1/2 inches (24.13 cm) in height, with shoulders 2-1/2 inches (6.35 cm) in outside diameter and 5 inches (12.7 cm) from the base.

4.5.5.2 Procedure.

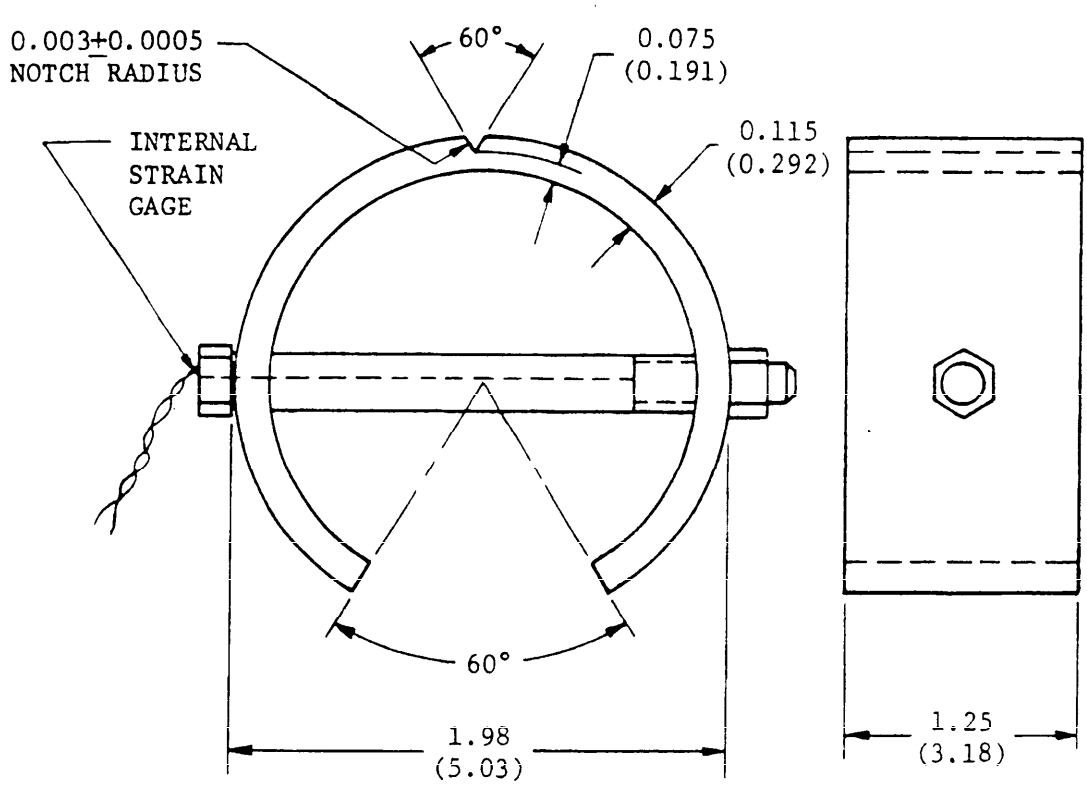

NOTE: DIMENSIONS IN INCHES (CM)

FIGURE 3. Notched C-ring (AISI 4340 steel).

4.5.5.2.1 Cold cycle test. One bottle shall be stored in the dark for at least 6 days. The other bottle shall be placed in a water bath maintained at a temperature of 54° ± 3°C (129° ± 5.4°F) for 1 hour. The bottle in the water bath shall be carefully removed and allowed to cool at room temperature for 1 hour and then visually examined. If any layer formation is evident, the bottle shall be thoroughly shaken for 1 minute, then allowed to remain undisturbed at room temperature for 1 hour. If the layer formation persists, the material shall be considered unsatisfactory and further testing discontinued. If the remover appears homogeneous, the bottle shall be placed in a cold box maintained at a temperature of -10° ± 3°C (14° ± 5.4°F) for 1 hour, after which it shall be removed and allowed to remain undisturbed at room temperature for 1 hour. The remover shall again be examined for homogeneity. If layer formation is evident, the sample shall be shaken and allowed to stand undisturbed for 1 hour. If layer formation is evident, further testing shall be discontinued. If the remover appears homogeneous, the contents of the bottle shall be carefully transferred (avoid splashing) to a similar chemically clean bottle for performance of the following test.

4.5.5.2.2 Hot cycle test. A strip of steel, 0.020 by 1/2 by 6 inches (0.05 by 1.27 by 15.24 cm), conforming to MIL-S-7952, shall be polished with polish impregnated wadding 1/ to remove surface contamination. The steel strip shall then be cleaned as specified in 4.5.4.1. The steel strip shall be partially immersed in the remover contained in the test bottle. In subsequent operations, the bottle shall be handled carefully to avoid sloshing of remover onto the steel strip. The bottle shall be capped, placed in an oil bath, and heated at a uniform rate to a temperature of 60° ± 3°C (140° ± 5.4°F), within 5 hours. It shall be held at this temperature for 3 hours. The bottle shall remain in the bath and the heating procedure shall be repeated each day for five days. No heat shall be supplied to the bath overnight. On the morning of the sixth day, the bottle shall be removed from the bath, uncapped and the steel strip carefully withdrawn without disturbing the remover. The strip shall be rinsed with tapwater and dried. The remover shall be compared with the remover in the original bottle stored in a dark place. Any difference in appearance, such as layer separation and evidence of polymerization shall be noted. The opened bottle shall be capped and the two bottles shall be throughly shaken for 1 minute, then allowed to remain undisturbed for 1 hour at room temperature, and then examined for any variation in appearance between the two samples. If considered satisfactory, the remover which has been heated as stated above, shall be tested also for paint stripping efficiency. The portion of the steel strip which had been immersed in the remover shall be examined for evidence of pitting, corrosion, and uneven darkening. The part of the strip above the remover shall be examined for evidence of corrosion.

1/ The polished impregnated wadding shall be a qualified product under MIL-I-22590.

4.5.6 Paint stripping efficiency.

4.5.6.1 Preparation of test panels. Test panels shall be made from 0.20 inch (0.51 cm) thick aluminum alloy sheet conforming to QQ-A-250/5 anodized to conform to MIL-A-8625 (chromic acid type film), and finished as specified in table II. The panels measuring 3 by 6 inches (7.62 by 15.24 cm) shall have corners and edges broken and smoothed. Four L-52 panels shall be marked to identify them as A, D, G and J, respectively. Four L-37 panels shall be marked to identify them as B, E, H and K, respectively. Four E-29 panels shall be marked to identify them as C, F, I and L, respectively. A strip of masking tape measuring 1/2 by 6 inches (1.27 by 15.24 cm) shall be applied lengthwise in the center of panels A to L, inclusive.

TABLE II. Test panel finishes.

Lacquer Panel - L-52 1/

Processing step	Material	Number of coats and thickness per coat	Drying time between coats	Drying time after 2nd coat	Baking after final coat
1	Epoxy primer MIL-P-23377	One 0.5 - 1.0 mil	1 hr. at room temp.	-	-
2	Lacquer, acrylic MIL-L-81352	Two 0.7 - 1.0 mil	1 hr. at room temp.	72	-

1/ In addition to panels prepared as specified in 4.5.6.1, four L-52 panels shall be prepared on aluminum alloy panels which have been treated in accordance with MIL-C-5541.

Lacquer panel - L-37

1	Coating, pre-treatment, smooth finish, spray type MIL-C-8514	One 0.2 - 0.3 mil	30 min. at room temp.	-	-
2	Lacquer type primer, MIL-P-7962 control formula	One 0.3 - 0.4 mil	1 hr. at room temp.	-	-
3	Lacquer MIL-L-19537 insignia white ANA color 511 (shade no. 17875)	Six 0.5 - 0.6 mil	45 min. at room temp.	-	-
4	Lacquer MIL-L-19537 insignia white ANA color 511 (shade no. 17875)	One 0.5 - 0.6 mil	-	Overnight at room temp.	1 hr. at 82°C (180°F)

Enamel panel - E-29

1	Coating, pre-treatment, smooth finish, spray type MIL-C-8514	One 0.2 - 0.3 mil	30 min. at room temp.	-	-
2	Zinc chromate primer, TT-P-1757 control formula	One 0.3 - 0.4 mil	30 min. at room temp.	-	-

TABLE II. Test panel finishes. - Continued

Enamel panel - E-29 - Continued					
Processing step	Material	Number of coats and thickness per coat	Drying time between coats	Drying time after 2nd coat	Baking after final coat
3	Enamel TT-E-489, class A	One mist coat	45 min. at room temp.	-	-
4	Enamel TT-E-489, class A	One full 1-1/5 mil	-	18 hrs. at room temp.	2 hrs. at 105°C (221°F)

4.5.6.2 Paint stripping efficiency - control formula product.

4.5.6.2.1 Formulation. (For use as a comparison formula only in requirements specified herein.)

Ingredients	Percent by weight
Paraffin wax (52°C - 54°C (125° - 127°F) melting point)	1.4
Petronate HL (Sonneborn)	5.0
Mix A	2.1
Mix B	11.7
Mix C	45.8
Methanol	3.4
Mix D	17.3
Sodium chromate solution (30 percent)	1.6
Mix E	11.7
Mix A	
Oleic acid (USP grade)	1.3 1/
Triethanolamine (MIL-E-50011)	0.8 1/
Mix B	
Toluene	7.7 1/
Thinner (MIL-T-6096)	3.0 1/
Ethyl acetate	1.0 1/
Mix C	
Methylene chloride	44.2 1/
Methocel H.G. (4000 cps)	1.6 1/
Mix D	
Ammonium hydroxide (28 to 30 percent by weight)	10.0 1/
Monoethylamine (70 percent by weight)	5.1 1/
Monoisopropanolamine	2.2

Ingredients	Percent by weight
Mix E	
Ethyl alcohol	1.7 1/
Pine oil (LLL-P-400, type I)	6.0 1/
Methyl ethyl ketone	4.0 1/

1/ On basis of total formulation

4.5.6.2.2 Equipment list. As directed in compounding procedure.

4.5.6.2.3 Compounding procedure. Mixes A, B, D and E shall be prepared in glass stoppered cylinders. Mix C shall be prepared by dissolving methocel in methylene chloride in a beaker, after which it should be covered with a watchglass and stored in a cool place.

A 1000 ml beaker and a heavy glass stirring rod shall be weighed. The paraffin wax shall be melted in this beaker over a hot water bath. The petronate HL shall then be blended into the melted paraffin. With gentle stirring, mix A shall be added. Stirring shall be continued as the ingredients cool. When the mixture has cooled to 27° ± 3°C (80.6° ± 5.4°F), the remaining ingredients shall be added in the order listed in the preceding paint remover formulation. The additions shall be accompanied by constant stirring at a moderate speed. Small portions at a time shall be added, and each portion shall be thoroughly dispersed before another is added. The mixture shall be stirred until smooth. The compounded material, together with the stirring rod, shall be weighed. The weight of the compounded material alone shall be calculated. If required, the weight of the compounded material shall be adjusted to the intended value by the addition of methylene chloride to replace any loss during the mixing process. The compound shall then be immediately poured into an amber colored glass container provided with a tight fitting screwcap containing inert liners. The control formula product shall be used for comparative testing within 7 days after preparation, and should be kept in a cool, dark place during this period.

4.5.6.3 Procedure. Panels A, B and C shall be placed on a rack or other suitable device so that the 6-inch (15.24 cm) dimension forms a 60° angle with the horizontal. This test shall be performed in a well ventilated, but draft-free room maintained at a temperature of 21° ± 3°C (69.8° ± 5.4°F) and at a relative humidity of 50 ± 5 percent. Approximately 10 ml of the thoroughly mixed test sample of remover shall be poured on 1/2 of the uncovered painted area of each panel, at a constant rate, taking 30 to 35 seconds for the pouring procedure. In like manner, the remaining uncovered area of the panels shall be coated with the control formula product. After allowing the test remover and control formula remover to act upon the painted surface for 15 minutes, the panels shall be removed from the rack and placed on a clean, dry horizontal surface for scrubbing. The brush used for the scrubbing operation shall be a dry metal or wooden brush, having a block measuring 1/2 by 1-1/2 by 3-1/2 inches (1.27 by 3.81 by 8.89 cm) with brush stock of 59 appropriately staggered tufts, each tuft of 50 ± 5 straight 0.091 inch (0.23 cm) diameter nylon fibers extending 5/8 inch

(1.59 cm) beyond the block. The scrubbing brush shall be weighted with a 5 pound (2.27 kg) weight and shall be passed over the remover coated areas 4 times with the 1-1/2 inch (3.81 cm) edges of the brush blocks facing the direction of the brushing motion. The panels shall then be rinsed for 1 minute under tapwater in accordance with the rinsing procedure described in 4.5.9, blotted with a paper towel, and examined visually. The test remover shall be compared with the control formula remover with respect to area of bare metal exposed by each in order to evaluate penetrating power and softening ability of the product.

Panels D, E, and F shall be subjected to the same procedure as panels A, B, and C, preceding, except that the scrubbing brush shall be weighted with a 10 pound (4.5 kg) weight and shall be passed over the remover coated areas 10 times. The two removers shall be compared, with respect to ability, to remove the panel finish completely.

Panels G, H and I shall be subjected to the same procedure as panels A, B and C with the following exceptions:

Panels G, H and I on the rack, as well as a 40 ml portion of each paint remover sample in a covered 50 ml beaker (the test sample and the control sample), shall be placed in a stream of air under an infrared drying lamp for 15 minutes. The temperature at the upper 3 inch (7.62 cm) edge of each panel shall be between 49°C and 54°C (120°F and 130°F). The temperature of the beakers containing the remover samples shall be between 38°C and 43°C (100°F and 110°F). The stream of air shall have a velocity of approximately 4 miles per hour and may be produced by an electric fan placed 18 inches (45.72 cm) from the panel surface. After the 15 minute interval, the panels shall be coated with the paint removers, using the same procedure described in coating panels A, B and C. After the paint removers have acted upon the paint surfaces for 1/4 hour, the infrared lamp shall be extinguished and the fan switched off. The panels shall then remain undisturbed for an additional 2 hours before being scrubbed. The scrubbing method shall be the same as that used on panels A, B and C. The test sample paint remover shall then be compared with the control sample paint remover with respect to ability to keep the panel finishes soft enough to be penetrable by brushing.

Panels J, K and L shall be subjected to the same procedure as panels A, B and C except that one side of each panel shall be utilized for stripping with a fresh test sample of paint remover while the other side shall be utilized for stripping with a test sample which had previously been subjected to the temperature cycling of the stability test described in 4.5.5. The scrubbing brush used shall be weighted with a 10 pound (4.5 kg) weight and the brush shall be passed over the remover coated surfaces 15 times.

4.5.7 Refinishing properties of stripped surfaces. If fresh remover meets the paint stripping efficiency requirements of 3.9, the total area of an L-52 panel shall be completely stripped in accordance with the general procedure outline in 4.5.6 for panels A, B and C. The stripped panel shall be refinished as specified in table III. The surface of the new finish shall then be examined to determine whether or not the film is tack-free as defined in 3.4 of method 4061 in Federal Standard No. 141. The adhesion of the new finish shall be determined in accordance with method 6304 of Federal Standard No. 141, and compared with the finish of a similar painted new panel, prepared at the same time as the refinished panel.

TABLE III. Test panel finish lacquer panel - L-37A.

Processing steps	Material	Number of coats and thickness per coat	Drying time between coats	Drying time before baking	Baking after final coat
1	Coating, pre-treatment, smooth finish, spray type MIL-C-8514	One 0.2 - 0.3 mil	30 min. at room temp.	-	-
2	Lacquer type primer, MIL-P-7962 control formula	One 0.3 - 0.4 mil	1 hr. at room temp.	-	-
3	Lacquer MIL-L-19537 insignia white ANA color 511 (shade no. 17875)	Two 0.5 - 0.6 mil	45 min. at room temperature	2 hrs. at room temperature	1 hr. at 82°C (180°F)

4.5.8 Volatility. One petri dish, 9 centimeters (cm) in diameter and 1.5 cm deep, shall be placed on each pan of a two-pan beam balance. Sufficient remover shall be added to cover the entire bottom of one of the dishes. Distilled water shall be carefully poured in the other dish until the dish containing the remover is counterbalanced. The balance with the perti dishes on the pans shall be exposed for 30 minutes in a draft-free atmosphere having a temperature of 21° ± 3°C (69.8° ± 5.4°F) and relative humidity of 50 ± 5 percent. At the end of the exposure period, the comparative loss in weights shall be observed.

4.5.9 Rinsability. Four bare metal panels shall be prepared as specified in 4.5.6.1. The clean, unpainted, anodized aluminum alloy panels, measuring 3 by 6 inches (7.62 by 15.24 cm), shall be marked A, B, C and D, respectively and then processed as follows:

Panel A shall be coated with the paint remover as described in 4.5.6.3, and placed in a draft-free location for 15 minutes. The panel shall then be rinsed with tapwater. The tapwater shall be at a temperature of 24° ± 3°C (75° ± 5.4°F) and shall flow vertically downward through a 2 inch (5.08 cm) length of glass tubing having an inside diameter of 1/4 inch (0.64 cm). The rate of flow shall be 4 gallons of water per minute, and the duration of rinsing shall be 1 minute. The rinsing shall be accomplished while the panel is moving back and forth in a horizontal plane 2 inches (5.08 cm) below the glass tubing outlet. Brushing shall not be employed. The wet panel shall be examined for residue and water break. The panel shall then be dried in the oven for 15 minutes at 71° ± 3°C (160° ± 5.4°F). Allow it to cool at room temperature, and re-examine for residue. When noticeable water break and residues occur, the panel surface shall then be finished in accordance with table III. The finished

surface shall then be examined for evidence of a tack-free film. A tack-free film is defined in method 4061 of Federal Standard No. 141. The adhesion of the finish shall be determined in accordance with the knife test, method 6304 of Federal Standard No. 141 and shall be compared with the adhesion of the finish on a new panel finished at the same time.

Panel B shall be subjected to the same procedure as panel A, except that after being coated with paint remover, it shall be placed in an oven at 45° ± 3°C (113° ± 5.4°F) for 15 minutes before rinsing.

Panel C shall be placed in a horizontal position and coated with paint remover which is draining from an L-52 lacquered panel while the latter is being coated with the test sample in accordance with 4.5.6.3, except that a 20 ml sample shall be poured over the entire area of an unmasked L-52 panel. After the remover has been allowed to act upon the lacquer surface for 30 minutes, the loosened finish and remover residue shall be scraped with a spatula and transferred to panel C. The material thus deposited on panel C shall be carefully distributed evenly over the entire surface without exerting any pressure. Panel C shall then be rinsed and examined as panel A.

Panel D shall be subjected to the same procedure as panel C, except that just before the rinsing, it shall be placed in an oven at 45° ± 3°C (113° ± 5.4°F) for 15 minutes.

4.5.10 Carbon removal properties.

4.5.10.1 Carbon remover control formula. The control formula shall have the following composition:

Ingredient	Percent by weight
Cresol USP	67
Potassium oleate (anhydrous)	25
Water	8

4.5.10.2 Procedure. A thoroughly used carbon covered aluminum alloy aircraft engine piston shall be cut into 8 equal sections. Piston sections utilized in this test shall be selected from the same piston in such a manner that two similar sections coated with approximately equal amounts of carbon will be used. One piston section shall be immersed in the paint remover under test for a few seconds to allow the compound to penetrate all holes and grooves. After withdrawal, the section shall be suspended and allowed to drain for 30 minutes. The section shall then be brushed with a soft bristle brush (typewriter brush), saturated with water. The pressure applied in brushing shall be sufficient to insure contact of the bristles with all crevices, ridges and holes. The section shall then be thorougly rinsed with tapwater accompanied by brushing until all loosened carbon is removed. A second piston section shall be immersed for 30 minutes in an aqueous solution of one part carbon remover control formula and 4 parts water at a temperature of 60° ± 3°C (140° ± 5.4°F). After the immersion period, the piston section shall be removed, scrubbed with a brush and then rinsed with tapwater. The two piston sections shall be examined, and compared.

4.5.11 Storage stability. One gallon (3.8 liters) of the remover shall be stored in a glass bottle to which have been added clean steel strips, conforming to MIL-S-7952. The total surface area (both sides) of the steel shall be equivalent to 100 square inches (645.2 sq cm). The bottle shall be protected from the light and stored for 1 year at 21° ± 3°C (69.8° ± 5.4°F). After such storage, the remover shall be subjected to all of the above tests except the accelerated storage stability test.

4.5.12 Service test. The service test performed by a Naval Air Station designated by the activity responsible for qualification, shall consist of field evaluation of the service test sample under service conditions conducted in accordance with standard operating procedures on as many aircraft as needed to determine suitability of the product for military use. The service test shall be performed when the paint remover has met all the requirements of section 3, including storage stability.

5. PREPARATION FOR DELIVERY

5.1 Civil agencies.

5.1.1 Packaging. Packaging shall be level A or Commercial, as specified (see 6.2).

5.1.1.1 Level A. The paint remover shall be packaged in 1, 5, or 55-gallon (3.8, 18.9 or 208.2 ml) containers respectively, as specified (see 6.2). The 1-gallon container shall conform to PPP-C-96, type V, class 4 with a metal screw cap closure. The cap shall have an inner friction metal seal. The cap shall be secured by mechanical means or by a cap wrench. External plan B coating and side seam striping are required. The 1-gallon container shall be provided with a formed bridge type handle or a wire handle which has been galvanized or otherwise coated to resist corrosion. The 5-gallon quantities of the paint remover shall be packaged in metal pails conforming to PPP-P-704, type I, class 3. The 55-gallon quantities of the paint remover shall be packaged in drums conforming to PPP-D-729, type I, class A, or type II.

5.1.1.2 Commercial. The paint remover in the unit quantities specified shall be packaged in accordance with normal commercial practice. The complete package shall be designed to protect the item against damage during shipment, handling and storage.

5.1.2 Packing. Packing shall be level A or commercial, as specified (see 6.2).

5.1.2.1 Level A. Six 1-gallon cans of remover, packaged as specified in 5.1, shall be packed in close-fitting boxes conforming to PPP-B-636, grades V3c, V3s or V2s. The boxes shall be closed, waterproofed and reinforced in accordance with the appendix to PPP-B-636. Alternatively, wirebound, cleated plywood or nailed wood boxes shall be acceptable shipping containers when lined with a waterproof barrier material. The barrier material shall be sealed at the edges with waterproof tape or adhesive. The 5-gallon and 55-gallon quantities shall be packaged in containers as specified in 5.1.1.1.

5.1.2.2 Commercial. The remover shall be packed in a manner that will assure acceptance by common carrier and provide product protection against loss and damage during multiple shipments, handling and storage. The shipping container shall be in compliance with the National Motor Freight Classification and Unifrom Freight Classification.

5.1.3 Marking. Marking shall be as specified in the contract or order.

5.2 Military activities.

5.2.1 Packaging. Packaging shall be level A or Commercial, as specified (see 6.2).

5.2.1.1 Level A. Unless otherwise specified, the paint remover shall be furnished in 5-gallon pails conforming to type I, class 3 of PPP-P-704 with a flexible spout closure. All interior surfaces of the container shall be coated with a lining that will not effect nor be affected by the paint remover.

5.2.1.2 Commercial. The paint remover shall be packaged in compatible containers in the specified quantities in a manner that will afford adequate protection necessary to prevent contamination and damage during shipment under environmental conditions, utilizing containers required by the Code of Federal Regulations, Title 49, Parts 100-199.

5.2.2 Packing. Packing shall be level A, B or Commercial, as specified (see 6.2).

5.2.2.1 Levels A and B. The paint remover shall be packaged as specified in 5.2.1.1. No overpacking shall be required. Standard 4-way entry pallets are required for handling with mechanical equipment.

5.2.2.2 Commercial. The packaged paint remover shall be packed in shipping containers in a manner that will afford adequate protection, at the lowest rate, against damage during direct shipment from the supply source to the first receiving activity. The shipping containers shall be in compliance with the requirements of the National Motor Freight Classification and the Uniform Freight Classification.

5.2.3 Marking. In addition to any marking required by the contract or order (see 6.2), each container shall be marked in accordance with MIL-STD-129. The marking shall also include the following precautions and directions for use:

PRECAUTIONS

a. Paint remover contained herein is toxic and contains ingredients harmful to skin and eyes.

b. Avoid contact of the paint remover with rubber, asphaltic base floors and walkways.

c. Attach suitable safety devices to stands or staging used in the removing procedure.

d. Avoid use in enclosed or unventilated areas.

e. Personnel shall not enter the interior of the aircraft during removing or subsequent clean-up procedure.

f. Mix thoroughly prior to use.

g. Store below 27°C (80°F).

h. Do not store in direct sunlight.

i. CONTENTS MAY BE UNDER PRESSURE IN STORAGE. OPEN CAUTIOUSLY TO AVOID INJURY.

j. Discard any bulging or distorted containers.

k. To open:

1. Extend the spout (full length).

2. Slowly turn the cap counter clockwise only far enough to break the seal.

3. Allow the internal and external pressures to equalize.

4. Remove the cap.

DIRECTIONS FOR USE

1. Preparation of airplane. Work with this material should be done outdoors in shaded areas, sheltered from excessive wind. Indoor use requires adequate ventilation. All aircraft surfaces should be precleaned using either type I or II, P-C-444 (1 part compound to 4 or 9 parts mineral spirits by volume) or MIL-C-43616, as applicable. Cool overheated surfaces with water spray prior to stripping. Allow to dry before applying remover. The tires shall be placed on wooden blocks at least one inch thick. Remove fabric covered surfaces, deicer boots, etc., or protect in place. Protect all bearings, rubber and plastic surfaces by masking or other suitable means. Stop all openings. Cover landing gear, tires, motors, etc. Protect gas and watertight seams.

2. Handling. Use goggle type eye glasses and solvent resistant gauntlet style gloves, aprons and boots. If remover gets on skin, immediately flood affected area with large quantities of water; rinse freely with diluted alcohol. Apply glycerin, vaseline or petrolatum. If remover gets in eye, flood with large quantities of water using eye cup; bathe well with 3 percent boric acid solution, then add a few drops of USP castor oil, and obtain medical attention.

3. Paint removal. Apply medium-heavy coat of remover uniformly over the surface by spraying, flowing or brushing. When spraying, use moderate pressure; avoid excessive pressure. When brushing, use round bristle brush and daub on generous coating of remover. Always apply stripper to the top surfaces first. Repeat application in 15 to 60 minutes and allow to act 15 to 30 minutes. Using round bristle brush, scrub to loosen any finish not yet free. If necessary, repeat the above procedure. Scrub with hollow handle fountain brush, using medium water pressure. After washing and scrubbing use air-water rinse guns to remove loosened paint and spent remover. The use of steam cleaners to remove spent remover from aircraft is not recommended. Remove masking. Carefully apply remover with paint brush on remaining finishes. When softened, remove with micarta scraper.

4. Carbon removal. Apply remover by flow or brush to carbon soiled surfaces; allow to act for 30 minutes; agitate with bristle brush; rinse with air-water rinse guns.

6. NOTES

6.1 Intended use. The material covered by this specification is intended for use in stripping lacquer and enamel coating systems from metal surfaces of aircraft.

6.2 Ordering data. Purchasers should select the preferred options permitted herein and include the following information in procurement documents.

a. Title, number and date of this specification.
b. Quantity desired in gallons (liters).
c. Container size required.
d. Selection of applicable levels of packaging and packing required (see 5.1 and 5.2).
e. Special marking, if other than specified in section 5.

6.2.1 Unit of purchase. The unit of purchase for the paint remover is the U.S. gallon. A U.S. gallon of liquid occupies 231 cubic inches at 15.6°C (60°F).

6.3 Qualification. With respect to products requiring qualification, awards will be made only for products which are, at the time set for opening of bids, qualified for inclusion in the applicable Qualified Products List whether or not such products have actually been so listed by that date. The attention of the contractors is called to this requirement, and manufacturers are urged to arrange to have the products that they propose to offer to the Federal Government tested for qualification in order that they may be eligible to be awarded contracts or orders for the products covered by this specification. The activity responsible for the Qualified Products List is the Naval Air Systems Command, Department of the Navy, Washington, DC 20361; however, information pertaining to qualification of products and letter of authorization for submittal of sample may be obtained from the Director, Aircraft and Crew Systems Technology Directorate, Code 60622, Naval Air Development Center, Warminster, PA 18974.

6.3.1 The remover furnished under contract shall be identical in every respect to the qualification samples which have been inspected and approved. In the event that the remover furnished under contract is found to deviate from the composition of the approved product or that the product fails to perform satisfactorily, approval of such product will be subject to immediate withdrawal from the Qualified Products List.

6.4 Batch. A batch is defined as that quantity of material which has been manufactured by some unit chemical process or subjected to some physical mixing operation intended to make the final product substantially uniform.

MILITARY INTEREST:

Custodians

Army - MR
Navy - AS
Air Force - 99

Review Activities

Army - MR
Air Force - 85, 11

User Activities

Army - MI, AV
Navy - MC

CIVI AGENCY COORDINATING ACTIVITIES:

GSA - FSS
NASA - JFK

PREPARING ACTIVITY:

Navy - AS

Project No. 8010-0839

Orders for this publication are to be placed with the General Services Administration, acting as an agent for the Superintendent of Documents. See section 2 of this specification to obtain extra copies and other documents referenced herein.