Downloaded from http://www.everyspec.com

TT-P-85E
September 15, 1977
SUPERSEDING
Fed. Spec. TT-P-85D
June 26, 1969

FEDERAL SPECIFICATION

PAINT, TRAFFIC AND AIRFIELD MARKING, SOLVENT BASE

This specification was approved by the Commissioner, Federal Supply Service, General Services Administration, for the use of all Federal agencies.

1. SCOPE AND CLASSIFICATION

1.1 Scope. This specification covers ready-mixed paint for marking airfield pavement. The paint is suitable for application on such surfaces as portland cement--concrete, bituminous cement--concrete, asphalt, tar, and previously-painted areas of these surfaces. The paint may be used alone or to bind reflective beads.

1.2 Classification.

1.2.1 Color. The traffic and airfield marking paint shall be furnished in the following types, as specified (see 6.2).

Type I - White
Type II - Yellow

2. APPLICABLE DOCUMENTS

2.1 The following documents, of the issues in effect on date of invitation for bids or request for proposal, form a part of this specification to the extent specified herein.

Federal Specification:

TT-B-1325 - Beads (Glass Spheres), Retroreflective

Federal Standards:

Fed. Std. No. 123 - Marking for Shipment (Civil Agencies).
Fed. Test Method Std. No. 141 - Paint, Varnish, Lacquer, and Related Materials; Methods of Inspection, Sampling and Testing
Fed. Test Method Std. No. 370 - Instrumental Photometric Measurements of Retroreflective Materials and Retroreflector Devices
Fed. Std. No. 595 - Colors

(Activities outside the Federal Government may obtain copies of Federal Specifications, Standards, and Handbooks as outlined under General Information in the Index of Federal Specifications and Standards and at the prices indicated in the Index. The index, which includes cumulative monthly supplements as issued, is for sale on a subscription basis by the Superintendent of Documents, U.S. Government Printing Office, Washington, DC 20402.

(Single copies of this specification and other Federal Specifications required by activities outside the Federal Government for bidding purposes are available without charge from Business Service Centers at the General Services Administration Regional Offices in Boston, New York, Philadelphia, Washington, DC, Atlanta, Chicago, Kansas City, MO, Fort Worth, Houston, Denver, San Francisco, Los Angeles, and Seattle, WA.

(Federal Government activities may obtain copies of Federal Specifications, Standards, and Handbooks and the Index of Federal Specifications and Standards from established distribution points in their agencies.

Downloaded from http://www.everyspec.com

Military Standard:

MIL-STD-105 - Sampling Procedures and Tables for Inspection by Attributes.

(Copies of Military Specifications and Standards required by contractors in connection with specific procurement functions should be obtained from the procuring activity or as directed by the contracting officer.)

Code of Federal Regulations:

49 CFR 178 - Department of Transportation (DOT) Shipping Container Specification.

(Application for copies should be adderssed to the Superintendent of Documents, Government Printing Office, Washington, DC 20402. Orders should cite the latest edition and supplements thereto.)

2.2 Other publications. The following documents form a part of this specification to the extent specified herein. Unless a specific issue is identified, the issue in effect on date of invitation for bids or request for proposal shall apply.

American Society for Testing and Materials (ASTM) Standards:

D 562 - Consistency of Paints using the Stormer Viscosimeter
D 711 - No-Pick-Up Time of Traffic Paints
D 968 - Abrasion Resistance of Coatings of Paint, Varnish, Lacquer, and Related Products by the Falling Sand Method
D 969 - Laboratory Test for Degree of Resistance of Traffic Paint to Bleeding
D 1308 - Effect of Household Chemicals on Clear and Pigmented Organic Finishes
D 1309 - Settling Properties of Traffic Paints During Storage
D 2244 - Instrumental Evaluation of Color Difference of Opaque Materials

(Application for copies should be addressed to the American Society for Testing and Materials, 1916 Race Street, Philadelphia, PA 19103.)

National Motor Freight Traffic Association, Inc., Agent:

National Motor Freight Classification.

(Application for copies should be addressed to the American Trucking Associations, Inc., Traffic Department, 1616 P Street, N.W., Washington, DC 20036.)

Uniform Classification Committee, Agent:

Uniform Freight Classification.

(Application for copies should be addressed to the Uniform Classification Committee, Room 1106, 222 South Riverside Plaza, Chicago, IL 60606.)

3. REQUIREMENT

3.1 Pigments. The contractor may use any combination of pigments provided the finished paint meets the requirements specified herein. Suspending and dispersing agents may be used to prevent excess settling and caking.

3.2 Vehicle. The contractor may use any combination of vehicle components provided the finished paint is in accordance with the requirements of this specification. Anti-skinning and antisettling agents may be used to meet the requirements of this specification.

3.3 Solvent. When tested as specified in 4.4.13, the solvent or solvent system shall conform to the following requirements by volume:

(a) Aromatic compounds with eight or more carbon atoms, except ethylbenzene: 8 percent maximum.
(b) Ethylbenzene and toluene: 20 percent maximum.
(c) Solvents with olefinic or cyclo-olefinic type of unsaturation: negative test.
(d) Aldehydes or branched-chain ketones: negative test.

Downloaded from http://www.everyspec.com

(e) Total of (a) plus (b): 20 percent maximum.
(f) Benzene: 0.01% maximum.
(g) Halogenated compounds: negative test.

3.4 Qualitative requirements.

3.4.1 Condition in container. When tested as specified in table IV, the paint as received shall show no evidence of hard settling, caking, or skinning. Any settled pigment shall be readily dispersible by hand stirring to form a smooth, uniform paint.

3.4.2 Skinning (partially full container). When tested as specified in table IV, the paint shall not skin when exposed for 30 days at a temperature of 40° ± 1°C. (105° ± 2°F).

3.4.3 Spraying properties. When tested as specified in table IV the paint, sprayed on a horizontal surface to a wet film thickness of 0.38 mm (0.015 in), shall level to a smooth uniform coating free from sags, runs, and surface irregularities.

3.4.4 Appearance. When tested as specified in 4.4.7, the paint on both panels shall be free from blooming, spotting, checking, or other visible defects.

3.4.5 Color. The white paint (type I) shall have the daylight directional reflectance specified in table I. The yellow paint (type II), when tested as specified in 4.4.1, shall not be more than 6.0 $CIE_{L^*a^*b^*}$ units different than color 33538 of Fed. Std. No. 595.

3.4.6 Flexibility. When tested as specified in 4.4.2, the paint shall show no cracking, flaking, or loss of adhesion after the test panel has been bent 180° over a 6.35 mm (1/4 in) cylindrical mandrel.

3.4.7 Water resistance. When tested as specified in 4.4.3, the paint shall show no blistering, softening, loss of adhesion, wrinkling, or other evidence of deterioration.

3.5 Quantitative requirements.

3.5.1 The paint shall conform to the quantitative requirements specified in table I, and 3.5.2, 3.5.3, 3.5.4, and 3.5.5.

TABLE I

Characteristics	Minimum	Maximum
Uncombined water, percent by weight of paint	-----	1.0
Coarse particles and skins (retained on a No. 325 sieve), percent by weight of paint	-----	1.0
Consistency, Krebs Units (at a shearing rate of 200 rpm)	70	80
Directional reflectance, percent, type I only	84	----
Dry time (no-pick-up), minutes	-----	30
Bleeding ratio	0.91	----
Dry opacity at 0.13 mm (0.005 in) wet-film thickness		
Type I	.90	----
Type II	.94	----

3.5.2 Abrasion resistance.

3.5.2.1 For baked films. When tested as specified in 4.4.10, not less than 65 liters of sand shall be required for the removal of the paint film.

3.5.2.2 For weathered films. When tested as specified in 4.4.10, not less than 50 liters of sand shall be required for the removal of the paint film.

Downloaded from http://www.everyspec.com

3.5.3 Luminance factor (paint plus glass beads). When tested as specified in 4.4.11, the luminance factor before accelerated weathering shall be as specified in table II. The accelerated weathering shall be performed as specified in 4.4.4. After the accelerated weathering, the loss in the luminance factor shall be not more than 15 percent of the values established in Table II.

TABLE II. Lumimance factor

Entrance angle	Luminance factor, minimum	
	Type I	Type II
75°	5.0	4.0
88°	40.0	35.0

3.5.4 Accelerated storage stability. When tested as specified in 4.4.12, the paint shall not be curdled, caked, skinned, nor gelled, and shall have a maximum Brookfield T-Spindle consistency of not more than 2.0×10^3 pascal-seconds (200 poises) (equivalent to a reading of 100 on the viscometer) and a stirred Brookfield T-Spindle consistency of not more than 5.0×10^2 pascal-seconds (50 poises). The Krebs-Stormer consistency after shaking shall not be greater than 85 KU.

3.5.5 Accelerated weathering. When tested as specified in 4.4.4, the reflectorized paint shall show not more than a 20 percent loss of glass beads; the non-reflectorized paint (type I) shall show a yellowness index difference of 0.09 maximum, and the nonreflectorized paint (type II) shall not differ from the original color by more than 6.0 $CIE_{L^*a^*b^*}$ units.

4. QUALITY ASSURANCE PROVISIONS

4.1 Responsibility for inspection. Unless otherwise specified in the contract or purchase order, the contractor is responsible for the performance of all inspection requirements as specified herein. Except as otherwise specified in the contract or order, the contractor may use his own or any other facilities suitable for the performance of the inspection requirements specified herein, unless disapproved by the Government.

4.2 Inspection of preparation for delivery. An inspection shall be made to determine whether the packaging, packing, and marking comply with the requirements of Section 5. Defects shall be scored in accordance with table III. The sample unit shall be one shipping container fully prepared for delivery and selected at random. Sampling shall be in accordance with MIL-STD-105. The lot size shall be the number of shipping containers in the end item inspection lot. The inspection level shall be S-2 with an AQL of 4.0 defects per hundred units.

TABLE III. Classification of preparation for delivery defects

Examine	Defects
Shipping containers	Size (capacity) not as specified. Container not full. Closure not tight. Bail (5-gallon container) missing or damaged. Not level specified.
Marking	Incorrect, incomplete, illegible.

4.3 Lot. The paint shall be assembled into lots as specified in MIL-STD-105. In MIL-STD-105, the words "essentially the same conditions" shall be interpreted to mean a manufacturer's batch and defined as the end product of all raw materials mixed, blended, or processed in a single operation.

Downloaded from http://www.everyspec.com

4.4 Test procedures. The paint shall be tested according to the test methods indicated in table IV. Unless otherwise specified, standard testing conditions are at a temperature of 25° ± 1°C (77° ± 2°F) and a relative humidity of 50 ± 5 percent. All test reports shall contain the individual values utilized in expressing the final result. All tests shall be evaluated for conformance to the requirements specified in section 3. Failure to pass any test, or noncompliance with any requirement, shall be cause for rejection of the sample.

TABLE IV. Tests and methods

Characteristics	Requirement paragraph	Applicable Test: Fed. Test Method Std.	Applicable Test: ASTM Method	Applicable Test: Test paragraph
Solvent	3.3	141/7355,7356		4.4.13
Condition in container	3.4.1	141/3011	----	------
Skinning	3.4.2	141/3021	----	------
Spraying properties	3.4.3	141/4331	----	------
Appearance	3.4.4	--------	----	4.4.7
Color, type II paint	3.4.5	141/4250	D 2244	4.4.1
Flexibility	3.4.6	141/2012	----	4.4.2
Water resistance	3.4.7	--------	D 1308	4.4.3
Uncombined water	Table I	141/4081	----	------
Coarse particles and skins	Table I	141/4092	----	----
Consistency, Krebs units	Table I	141/4281	----	------
Directional reflectance	Table I	141/6121	----	4.4.5
Dry time, no-pick-up	Table I	--------	D 711	4.4.6
Bleeding ratio	Table I	141/6121	D 969	4.4.8
Dry opacity	Table I	141/4121	----	4.4.9
Abrasion resistance	3.5.2	--------	D 968	4.4.10
Luminance factor	3.5.3	370	----	4.4.11
Accelerated storage stability	3.5.4	--------	D 1309/D562	4.4.12
Accelerated weathering	3.5.5	141/6152	----	4.4.4

4.4.1 Color. Use the non-beaded panel with the type II paint, prepared for the accelerated weathering test (4.4.4). Determine the color difference of the paint before and after weathering, in accordance with ASTM method D 2244 using the following equations to calculate the $CIE_{L^*a^*b^*}$ units:

$$E = [(\ L^*)^2 + (\ a^*)^2 + (\ b^*)^2]^{1/2}$$

where:

$$L^* = 25(100Y/Y_o)^{1/3} - 16;\ 1 \quad Y \quad 100$$
$$a^* = 500[(X/X_o)^{1/3} - (Y/Y_o)^{1/3}]$$
$$b^* = 200[Y/Y_o)^{1/3} - (Z/Z_o)^{1/3}$$

X_o, Y_o, Z_o are as defined in CIE 1976 (L*u*v*)

Evaluate the results for compliance with 3.4.5.

4.4.2 Flexibility. Draw down the paint to a dry-film thickness of 0.064 mm (0.0025 in) on a tin plate panel prepared in accordance with method 2012 of Fed. Test Method Std. No. 141. Air dry for 24 hours at standard conditions, bake for 5 hours at 105 ± 3°C, and then store for 15 minutes at standard conditions. Perform the test in accordance with method 6221 of Fed. Test Method Std. No. 141, and evaluate for compliance with 3.4.6.

4.4.3 Water resistance. Apply a wet-film thickness of 0.38 mm (0.015 in) with a film applicator to a clean glass plate. Let dry in a horizontal position at standard conditions for 72 hours. Immerse one-half the painted plate in distilled water at room temperature for 18 hours as specified in ASTM method D 1308, section 5D. Immediately after removal examine for blisters. Allow the plate to air dry for 24 hours at room temperature, and evaluate for compliance with 3.4.7.

Downloaded from http://www.everyspec.com

4.4.4 Accelerated weathering. Apply a wet film of 0.38 mm (0.015 in) with a film applicator to four glass panels measuring 165 by 432 by 6.5 mm. After 15 seconds, apply glass beads to three panels each at 150g/m^2 to an area measuring 140 by 380 mm (5-1/2 by 15 in). The glass beads shall conform to Federal specification TT-B-1325, type III, gradation A. (Application of glass beads should be in accordance with recommended apparatus and test procedure as described in 6.3 and 6.4.)

4.4.4.1 Tests before weathering.

a. Air dry the panels at standard conditions for 72 hours.
b. Weigh each beaded panel to the nearest tenth of a gram.
c. Determine the luminance factor of the beaded panels in accordance with 4.4.11.
d. Determine the tristimulus values of the non-beaded type I paint in accordance with method 6131 of Fed. Test Method Std. No. 141.

4.4.4.2 Tests, after weathering.

a. Expose panels for 300 hours as per method 6152 of Fed. Test Method Std. No. 141.
b. Dry the beaded panels to constant weight at standard conditions and lightly brush the panels to remove loose glass beads. Determine the weight loss, calculate the average, and evaluate for compliance with 3.5.5. Redetermine the luminance factor in accordance with 4.4.11.
c. Wash the non-beaded panel under running water with a degreased lamb's wool pad to remove any scum or dirt. Wipe off water with a clean cheesecloth and let dry for two hours at standard conditions.
d. Redetermine the trismulus values of the non-beaded type I paint and calculate the yellowness index difference as per method 6131 of Fed. Test Method Std. No. 141. Evaluate results for compliance with 3.5.5.
d. Determine the color of the type II paint and calculate the color difference from the original color as per method outlined in 4.4.1. Evaluate results for compliance with 3.5.5.

4.4.5 Directional reflectance. Determine the directional reflectance of the type I paint according to method 6121 of Fed. Test Method Std. No. 141, using the panel prepared for the water resistance test before immersion. Check for compliance with the requirement in table I.

4.4.6 Dry time, no-pick-up. Test the paint in accordance with ASTM D 711. Evaluate for compliance with the requirement in table I.

4.4.7 Appearance. Evaluate the panels prepared for the dry time test (4.4.6) and the spraying properties test (table III). Evaluate for compliance with 3.4.4.

4.4.8 Bleeding ratio. Determine the bleeding ratio in accordance with ASTM D 969, except as specified herein. The test panel shall be a commercially available asphalt-saturated felt. A nonbleeding contrast surface shall be provided by affixing 19 mm-wide (3/4 in) cellophane tape, with firm pressure, to the entire width of the panel so that half of the 180 by 250 mm (7- by 10-in) test panel is covered. Using an applicator to give a width of 150 mm (6 in), the paint shall be applied at a wet-film thickness of 0.38 mm (0.015-in). Keep the coated panel in a flat position and allow to dry for 48 hours. Determine the 45°, 0° directional reflectance of the film in direct contact with the panel and the film on the tape in accordance with Fed. Test Method Std. No. 141, method 6121. Five readings at different positions of the film in direct contact with the panel shall be made, and the values averaged. The same measurement procedure shall be followed for the film on the tape. The bleeding ratio shall be determined using the average value of the reading taken for the film in direct contact with the panel, and dividing this value by the average value of the readings taken from the film over the tape. Evaluate for compliance with the requirements in table I.

4.4.9 Dry opacity. The dry opacity shall be determined as in method B, procedure B, method 4121 of Fed. Test Method Std. No. 141, except that the following formula shall be used in calculating the wet film thickness:

Downloaded from http://www.everyspec.com

$$T = \frac{(W) \times (1000)}{(S) \times (A) \times (GEC)}$$

where: T = wet film thickness, mm
W = mass of dried paint, g
S = specific gravity of paint
A = area of dried film mm^2
NV = nonvolatile ratio

Evaluate for compliance with the requirements in table I.

4.4.10 Abrasion resistance. Apply the paint on four glass panels measuring 100 by 200 mm by a draw-down method to a dry film thickness of 0.102 to 0.107 mm (0.0040 to 0.0042 in).

4.4.10.1 Baked films. Air dry two of the panels prepared in 4.4.10 for 24 hours at standard conditions, and then bake for 3 hours at 105° ± 3°C. After baking, condition the panels for 60 minutes at standard conditions, and then run the abrasion test as specified in 4.4.10.3.

4.4.10.2 Weathered films. Air dry the other two panels prepared in 4.4.10 for 48 hours at standard conditions. Then subject the panels to accelerated weathering for 300 hours in accordance with method 6152 of Fed. Test Method Std. No. 141. Remove the panels and condition for 24 hours at standard conditions, and then run the abrasion test as specified in 4.4.10.3.

4.4.10.3 Test. Subject the panels, prepared in 4.4.10.1 and 4.4.10.2, to the abrasion test in accordance with ASTM method D 968, except that the inside diameter of the metal guide tube shall be 18.97 to 19.05 mm (0.747 to 0.750 in). The test shall be run on two panels. (Note: Five liters of sand equals 17.5 pounds of sand). Evaluate the test results for compliance with 3.5.2.

4.4.11 Luminance factor. The luminance factor shall be determined in accordance with Fed. Test Method Std. No. 370.

4.4.11.1 Test panels. Use the test panels prepared for the accelerated weathering test (see 4.4.6).

4.4.11.2 Test conditions. As required by section 4 of Fed. Test Method Std. No. 370, the test conditions are:

(a) Observation angle - 1.33°
(b) Entrance angle - 75° and 88°, respectively
(c) Presentation angle - 0°
(e) Test distance between sample and photoreceptor - 50 ft
(f) Photoreceptor angular aperture - 10 minutes of arc
(g) Angular aperture of the light projector - 10 minutes of arc

4.4.11.3 Results. The value of each determination shall conform with the luminance factor requirements in table II.

4.4.12 Accelerated storage stability. The accelerated storage stability shall be determined in accordance with ASTM D 1309 except that the exposure cycle shall be as follows:

Day 1 through day 5:

Place in -22 °C freezer for 2 hours.
Transfer to 71 °C oven for 4 hours.
Transfer to -22 °C freezer for 2 hours.
Transfer to 71 °C oven for 16 hours (except that on day 5 at the completion of the last freeze cycle, the sample shall be placed in the oven until the morning of day 8 which shall become day 1 of the repeat cycle.)

The exposure shall be continued for a total of 14 days. After exposure the stability shall be tested as in 4.4.12.1.

Downloaded from http://www.everyspec.com

4.4.12.1 T-Spindle consistency.

4.4.12.1.1 Equipment.

(a) Brookfield Syncro-Lectric Viscometer, model RVT
(b) Brookfield Helipath Stand, model C
(c) Brookfield Helipath T-F spindle, modified by cutting the shaft off at a point 1.0 mm below the bottom of the crosspiece.

4.4.12.1.2 Procedure. The shut-off switch on the helipath shall be adjusted so that it will shut off when the lowest point of the spindle is 1 mm away from the bottom of the can. The test sample shall not be shaken or stirred prior to test. Position the sample under the spindle and lower the viscometer until the top of the crosspiece is just submerged in the sample. With the viscometer reading at a speed of 5 rpm, start the viscometer motor and the helipath stand. Observe the viscometer reading as it is rotating, without stopping the viscometer indicator. Multiply the reading by the factor of 20.0, and evaluate against the maximum T-spindle consistency allowed in 3.5.4. After the helipath stops its descent, start the timer and continue stirring with the T-Spindle and record the viscometer reading at the end of 5 minutes. The consistency in pascal-seconds (poises), obtained by multiplying the viscometer reading by the factor of 20.0, is the stirred T-Spindle consistency. Evaluate for compliance with 3.5.4.

4.4.12.2 Krebs-Stormer viscosity. After testing as specified in 4.4.12.1, shake the sample for 3 minutes on a Red Devil Paint Conditioner, model 30, or equal, allow to stand for 1 hour, and test at a shearing rate of 200 rpm according to ASTM method D 562, for compliance with 3.5.4.

4.4.13 Solvent analysis.

4.4.13.1 Solvent extraction. The solvent shall be extracted from the paint in accordance with method 7355 of Fed. Test Method Std. No. 141.

4.4.13.2 Solvent composition. The composition of the solvent shall be determined in accordance with method 7356 of Fed. Test Method Std. No. 141.

4.4.13.3 Halogenated compounds. The presence of halogenated compounds shall be determined in accordance with method 5132 of Fed. Test Method Std. No. 141.

4.4.13.4 Benzene. When the solvent is tested in accordance with 4.4.13.2, a trace benzene peak of not more than 0.01 percent shall be allowed.

5. PREPARATION FOR DELIVERY

5.1 Packing. Packing shall be level A or Commercial, as specified (see 6.2).

5.1.1 Level A. The paint shall be furnished in five-gallon metal cans or 30 gallon steel drums, as specified (see 6.2). Five-gallon metal cans shall be in accordance with 49 CFR 178 Specification DOT 5, 17C, 37A-60, 37A-80, or 37C-80. Thirty-gallon steel drums shall be in accordance with 49 CFR 178 Specification DOT 17E or 17H.

5.1.2 Commercial. The paint shall be furnished in five-gallon or 30 gallon containers, as specified (see 6.2), to insure safe delivery at destination, to provide for safe redistribution by the initial receiving activity, and shall be acceptable by common carrier under the National Motor Freight Classification or Uniform Freight Classification.

5.2 When shipment to Government depots are full car or truckload, the shipping containers shall be for shipment and handling in accordance with normal commercial practice. The palletized load shall not exceed 2,500 pounds in weight, 63 inches in height, 56 inches in length, and 45 inches in width.

5.3 Marking. Shipping containers and palletized loads (when applicable) shall be marked in accordance with Fed. Std. No. 123.

5.3.1 Special marking. Detailed manufacturer's instructions shall be included on the container. The directions for use and preparation of substrates shall contain the following:

Downloaded from http://www.everyspec.com

"This paint is to be used for marking airfield pavements.

"This paint is reflectorized by dropping onto the wet paint glass beads conforming to TT-B-1325, type III, graduation A. Any suitable dispensing equipment may be used provided the glass beads are uniformly spread on the surface at the specified rate.

"The surface shall be well prepared for painting, free from dirt, other surface contaminants, and from loose, peeling, or poorly bonded paint.

"The paint shall be applied to the surface at a rate of 100 to 110 square feet per gallon. The paint shall be applied at air and surface temperatures of 7°C or above. The glass beads shall be dispensed at the rate of 10 pounds per gallon of paint."

6. NOTES

6.1 Intended use. This paint, either reflectorized or non-reflectorized (see 5.2), is intended to mark airfields and other pavements. To form the reflectorized paint, reflective glass beads are dropped onto the surface before the paint dries or sets up.

6.2 Ordering data. Purchasers should select the preferred options permitted herein, and include the following information in procurement documents:

(a) Title, number, and date of this specification.
(b) Level of packaging, packing, and marking required (see 5.1).
(c) Unit quantity required (see 5.1).
(d) Type required (see 1.2.1).

6.3 Bead dropping device. The bead dropping device (figures 1, 2, and 3) has a series of "V" shaped hoppers tied together mechanically so that they will open when triggered. This bead-retaining mechanism is attached to the top of a box having inside dimensions of 140 by 380 by 610 mm high. To dispense the beads uniformly, an internal screen is provided approximately 25 mm below the bead-retaining mechanism. The base of the structure is open so that the paint film can be inserted. Mechanical means are also provided to lower the structure onto the test plate and to tilt the structure so that the base may be cleaned. Mechanical drawings of the bead dropper can be obtained from GSA-FSS; Paint Branch (FNSP), Washington, DC 20406.

6.4 Bead dropping procedure. A measured amount of beads are distributed uniformly in the closed "V" shaped hoppers. The paint is then applied to a glass plate or other surface. The plate is inserted under the structure and the structure is lowered onto the plate. After the specified time, the bead-retaining device is mechanically triggered, allowing the beads to drop uniformly onto the painted surface.

Military Custodian:	Preparing Activity:
Air Force - 99	GSA-FSS

Downloaded from http://www.everyspec.com

Figure 1

BEAD DROPPING DEVICE

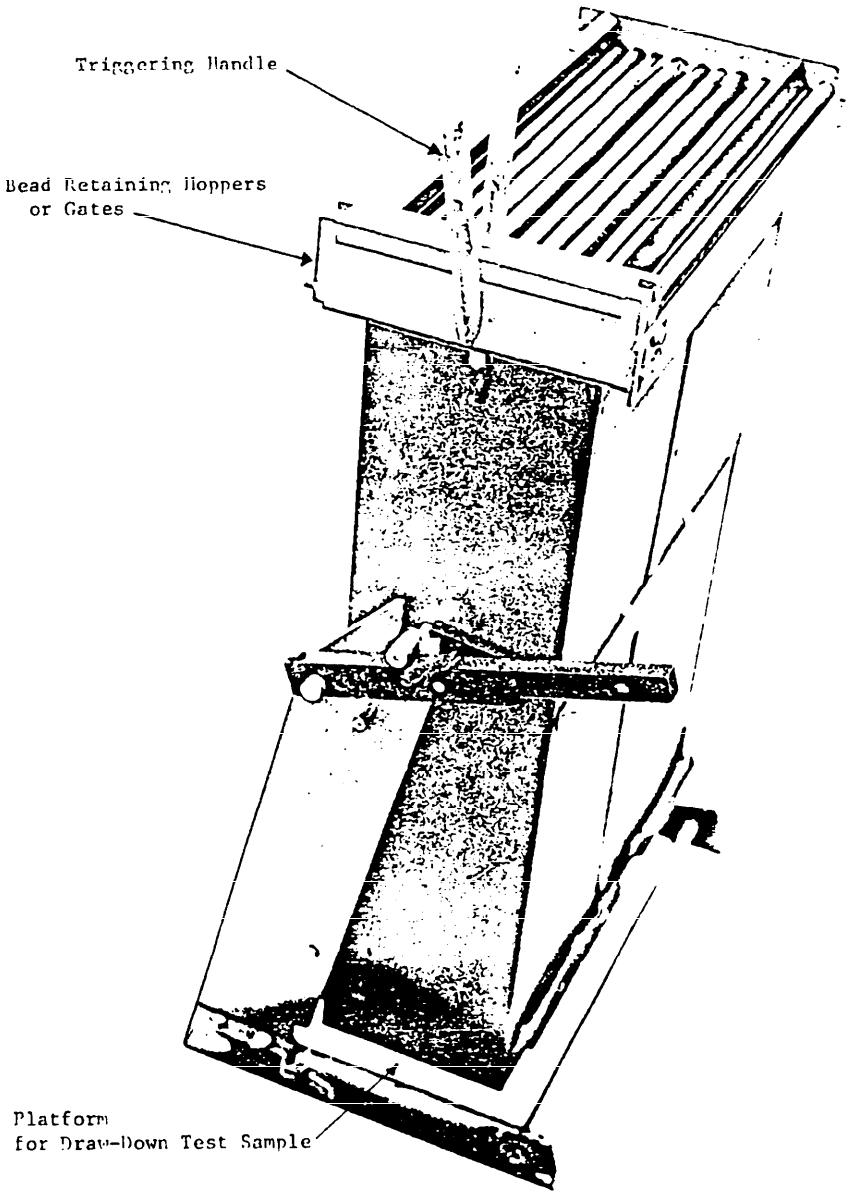

Downloaded from http://www.everyspec.com

Figure 2

SEAD DROPPING DEVICE

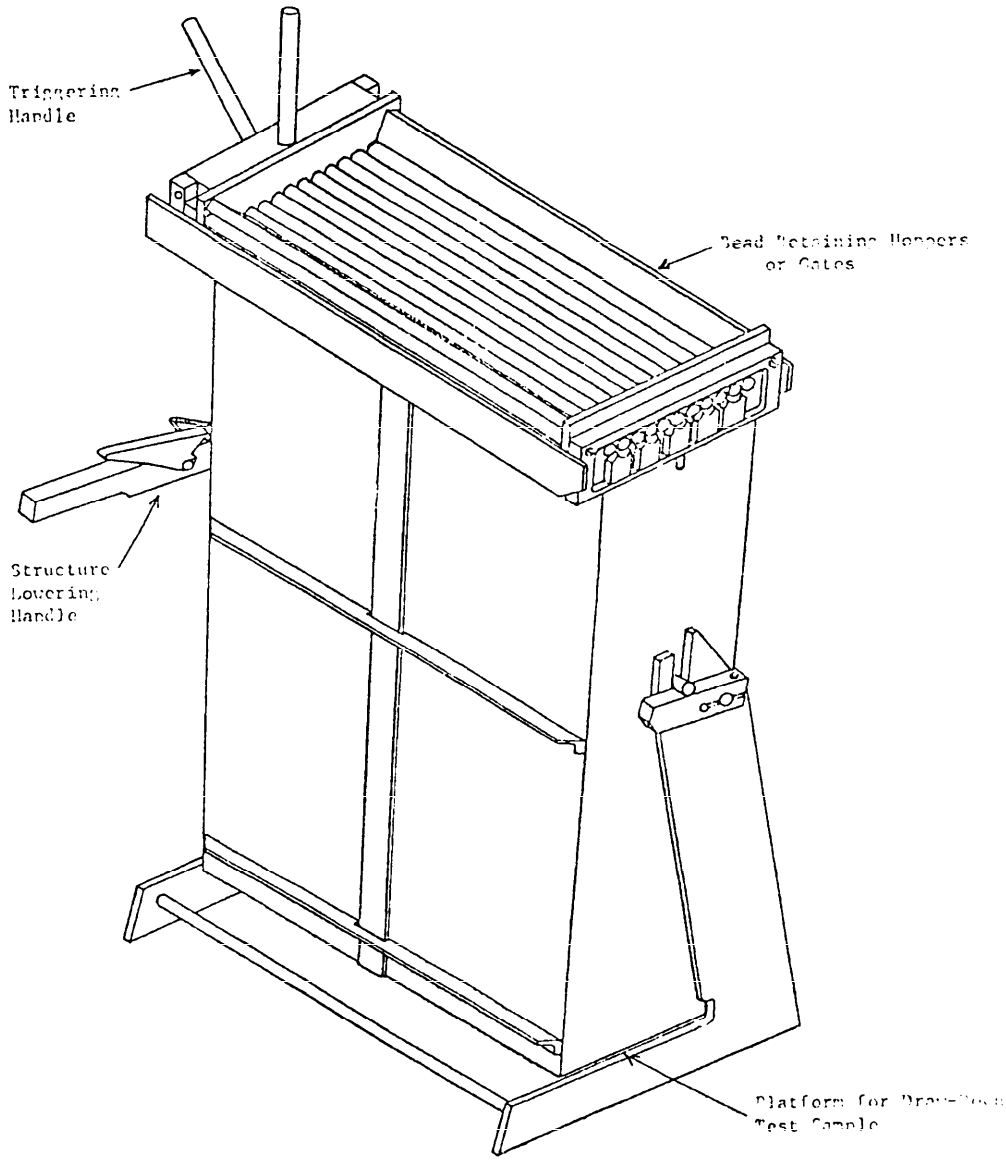

Downloaded from http://www.everyspec.com

Figure 3

BEAD DROPPING DEVICE

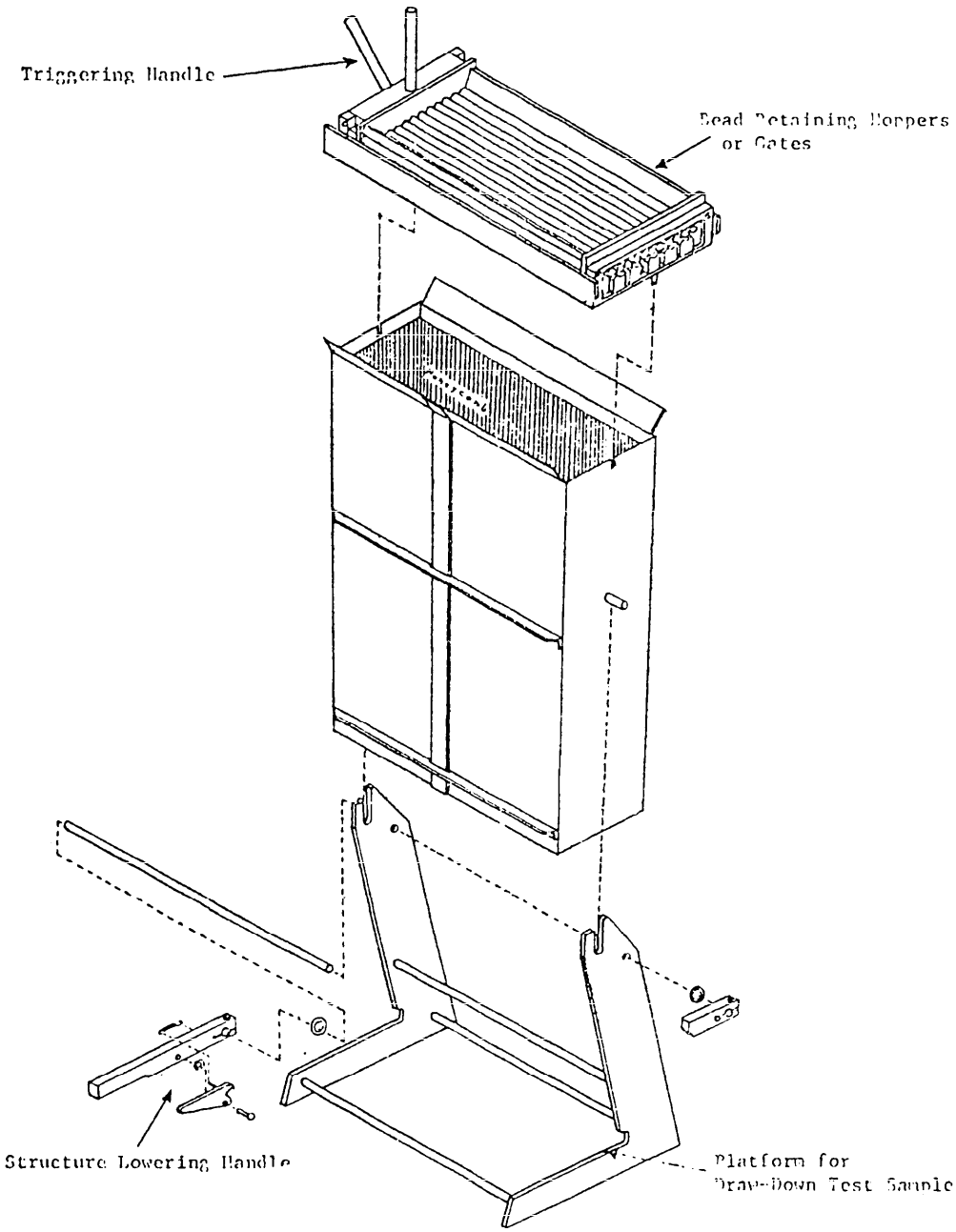

Orders for this publication are to be placed with General Services Administration, acting as an agent for the Superintendent of Documents. See Section 2 of this specification to obtain extra copies and other documents referenced herein. Price 70 cents each.