INCH-POUND

QQ-N-00286F(SH)
29 November 1990

INTERIM REVISION
TO
FEDERAL SPECIFICATION

NICKEL-COPPER-ALUMINUM ALLOY, WROUGHT (UNS N05500)

This interim revision was developed by the Naval Sea Systems Command, Department of the Navy, Washington, DC 20362-5101, based upon currently available technical information. It is recommended that Federal agencies use it in acquisitions and forward recommendations for changes to the preparing activity at the address shown above.

The General Services Administration has authorized the use of this interim revision as a valid exception to Federal Specification QQ-N-286E, dated August 2, 1985.

1. SCOPE AND CLASSIFICATION

1.1 Scope. This specification covers all nickel-copper-aluminum alloy wrought forms formerly classified as class A. This alloy is designated under the Unified Numbering System for Metals and Alloys as UNS N05500. Except for cases where nonmagnetic properties are paramount, this alloy is intended to be age hardened prior to placing the material in service.

Beneficial comments (recommendations, additions, deletions) and any pertinent data which may be of use in improving this document should be addressed to: Commander, Naval Sea Systems Command, SEA 55Z3, Department of the Navy, Washington, DC 20362-5101 by using the self-addressed Standardization Document Improvement Proposal (DD Form 1426) appearing at the end of this document or by letter.

FSC 9525, 9530,
9535, 9540

DISTRIBUTION STATEMENT A. Approved for public release; distribution is unlimited.

1.2 Classification:

1.2.1 Forms and conditions. The material should be furnished in the following forms and conditions, as specified (see 6.2).

Form 1 - Bar and rod, unaged.
Condition: Hot finished, unaged.
Cold drawn, unaged.
Annealed (hot finished or cold drawn), unaged.

Form 2 - Bar and rod, age hardened.
Condition: Hot finished and age hardened.
Cold drawn and age hardened.
Annealed (hot finished or cold drawn), and age hardened.

Form 3 - Sheet.
Condition: Cold rolled and annealed.
Cold rolled, annealed, and age hardened.

Form 4 - Strip.
Condition: Cold rolled and annealed.
Cold rolled, annealed, and age hardened.
Cold rolled, half or full hard, as rolled.
Cold rolled, half or full hard, and age hardened.

Form 5 - Wire.
Condition: Cold drawn, as drawn.
Cold drawn and annealed.
Cold drawn, spring temper, as drawn.
Cold drawn, annealed, and age hardened.
Cold drawn (as drawn) and age hardened.
Cold drawn, spring temper, and age hardened.

Form 6 - Plate
Condition: Hot rolled and annealed.
Hot rolled, annealed, and age hardened.

Form 7 - Forgings (Including bar and rod formed by forging).
Condition: Hot finished, unaged
Annealed, unaged
Hot finished and age hardened
Annealed and aged hardened

Note: Constant cross-section bars and rods formed by forging are considered to be "forgings" only for purposes of:

(a) Sample frequency for mechanical properties (4.4.1.3).
(b) Visual and dimensional inspections (4.4.1.4).
(c) Ultrasonic testing requirements (4.4.3.3.2).

Constant cross-section bars and rods are not otherwise considered to be "part forgings" or "intricate or complex shape forgings."

1.2.2 Finishes. The material shall be furnished in the following finishes, as specified (see 6.2). Age hardened condition of finishes (a), (b), (c), (d) and (g) below shall be furnished with the age hardening oxide intact:

(a) Hot finished.
(b) As drawn.
(c) Rough turned or rough ground (rounds only).
(d) Semismooth machined (rounds only).
(e) Smooth finished machined (rounds only).
(f) Bright finish (shafting only).
(g) Pickled.

2. APPLICABLE DOCUMENTS

2.1 Government documents.

2.1.1 Specifications and standards. The following specifications and standards form a part of this document to the extent specified herein. Unless otherwise specified, the issues of these documents are those listed in the issue of the Department of Defense Index of Specifications and Standards (DODISS) and supplement thereto, cited in the solicitation (see 6.2).

Federal Standard

FED-STD-182 - Continuous Identification Marking of Nickel and Nickel Base Alloys..

(Activities outside the Federal Government may obtain copies of Federal specifications, standards, and commercial item descriptions as outlined under General Information in the Index of Federal Specifications, Standards and Commercial Item Descriptions. The index, which includes cumulative bimonthly supplements as issued, is for sale on a subscription basis by the Superintendent of Documents, U.S. Government Printing Office, Washington, DC 20402.)

(Copies of listed federal and military standards, specifications, Commercial Item Descriptions (CIDs), handbooks and associated documents listed in the Department of Defense Index of Specifications and Standards (DoDISS), should be obtained from the DoD Single Stock Point, Standardization Documents Order Desk, Bldg 4D, 700 Robbins Avenue, Philadelphia, PA 19111-5094. Copies of industry association documents should be obtained from the sponsor. Copies

of all other listed documents should be obtained from the contracting activity or as directed by the contracting officer.)

(Federal Government activities may obtain copies of Federal Standardization documents and the Index of Federal Specifications, Standards and Commercial Item Descriptions from established points in these agencies.)

Military Standards

MIL-STD-105 - Sampling Procedures and Tables for Inspection by Attributes.
MIL-STD-163 - Steel Mill Products Preparation for Shipment and Storage.
MIL-STD-271 - Nondestructive Testing Requirements for Metals.

(Unless otherwise indicated, copies of federal and military specifications and standards are available from the Standardization Documents Order Desk, Bldg. 4D, 700 Robbins Avenue, Philadelphia, PA 19111-5094).

2.2 Non-Government publications. The following documents form a part of this specification to the extent specified herein. Unless otherwise specified, the issues of the documents which are DOD adopted are those listed in the issue of the DODISS cited in the solicitation. Unless otherwise specified, the issues of documents not listed in the DODISS are the issues of the documents cited in the solicitation (see 6.2).

AMERICAN SOCIETY FOR TESTING AND MATERIALS (ASTM)
E 8 - Tension Testing of Metallic Materials.
E 10 - Standard Test Method For Brinell Hardness of Metallic Materials.
E 18 - Standard Test Method For Rockwell Hardness and Rockwell Superficial Hardness of Metallic Materials.
E 76 - Methods for Chemical Analysis of Nickel-Copper Alloys.
E 112 - Methods for Determining Average Grain Size
E 340 - Method for Macroetching Metals and Alloys

(Application for copies should be addressed to the American Society for Testing and Materials, 1916 Race Street, Philadelphia, PA 19103.)

2.3 Order of precedence. In the event of a conflict between the text of this document and the references cited herein (except for related associated detail specifications, specification sheets, or MS standards), the text of this document takes precedence. Nothing in this document, however supersedes applicable laws and regulations unless a specific exemption has been obtained.

3. REQUIREMENTS

3.1 First article. Melters or melter/converters shall perform first

article inspection (see 6.3) in accordance with 4.3.

3.1.1 Exemption from first article inspection. New melters/convertors who supply evidence that they have met the requirements of 4.3.2 for a minimum of five heats may obtain a letter of confirmation from the Naval Sea Systems Command excusing them from additional first article inspections.

3.1.2 Changes in process controls. The melter/convertor shall not change the basic manufacturing method for which first article inspections have been approved. The melter/convertor shall reconfirm the acceptability of his fabrication process by performing a repeat first article inspection in accordance with 4.3.2 on one heat of material on a biennial basis.

3.2 Processing. Nickel-copper-aluminum alloy shall be produced by the electric furnace process and further refined by any process proved adequate to meet the first article requirements. Casting may be by ingot or continuous cast methods. Cast ingots or billets shall be not worked to a fine unifrom grain structure. Final processing shall be by hot working, cold working, and heat treating as specified in 3.2.2. Convertors shall use only material melted by a melter who has satisfied first article inspection.

3.2.1 Forgings as final product. For all forgings other than bar or rod, a forging sketch shall be prepared when specified (see 6.2). Forgings with final forged diameter or distance across parallel surfaces of 4 inches or greater shall be to such a configuration that they can be ultrasonially inspected 100 percent by volume with three directional coverage.

3.2.2 Heat treatment.

3.2.2.1 Solution treatment. Solution treating shall be accomplished by holding at 1600 to 1900°F followed by water quenching. The time at temperature must be such that the entire volume of material is heated to the solution treating temperature. Solution treating is usually performed by the manufacturer and does not normally need to be repeated. If necessary to soften the material, resolution treating shall be at 1600 to 1900°F.

3.2.2.2 Age hardening. Age hardening shall be performed by heating to an aim temperature of 1100°F, holding at temperature for 8 to 16 hours depending on hardness of material and desired hardness after aging, furnace cooling to an aim temperature of 900°F then air cooling to room temperature. As an alternate, aging may be at an aim temperature of 1100°F for up to 16 hours, furnace cool to an aim temperature of 1000°F, hold for approximately 6 hours, furnace cool to an aim temperature of 900°F, hold for approximately 8 hours and air cool to room temperature.

3.3 Chemical requirements. Chemical composition of the material shall conform to table I. When a product (check) analysis is specified (see 6.2), the material shall conform to the requirements of table I, subject to the permissible tolerances for check analysis.

TABLE I. Chemical composition.

Elements	Requirement	Product (check) analysis variations, under minimum or over maximum, of the specified limit of element
	Percent	Percent
Nickel 1/	63.0 minimum	0.45
Aluminum	2.30-3.15	.20
Carbon (total), maximum	0.18	.02
Iron, maximum	2.0	.05
Manganese, maximum	1.5	0.04
Silicon, maximum	0.50	.03
Titanium	0.35-0.85	.03 (minimum) .04 (maximum)
Sulfur, maximum	0.010	.003
Copper 2/	27.0-33.0	.15 (minimum) .20 (maximum)

1/ Cobalt counting as nickel. Element shall be determined arithmetically by difference.
2/ Silver counting as copper.

3.4 Mechanical properties. Mechanical properties shall be as specified in tables II through VI, as applicable.

TABLE II. Mechanical properties (bar, rod, forged parts and plate - unaged 1/).

Form	Condition	Hardness	
		Brinell (3000 kg) (maximum)	Rockwell (maximum)
Rounds 2/, hexagons, squares, rectangles and forged parts	Hot finished	245	C23
Hexagons	Cold drawn	260	C26
Rounds:			
1/4 to 1 inch incl	Cold drawn	280	C29
Over 1 to 3 inches, incl		260	C26
Over 3 to 4 inches, incl		240	C22

See footnotes at end of table.

TABLE II. Mechanical properties (bar, rod, forged parts and plate - unaged 1/). - Continued

Form	Condition	Hardness	
		Brinell (3000 kg) (maximum)	Rockwell (maximum)
Rounds, hexagons squares, rectangles and forged parts	Hot finished or cold drawn and annealed	185	B90
Plate: up to 4, incl	Hot rolled and annealed	185	B90

1/ No tensile tests are required except as provided for in 4.4.1.3.2.3.
2/ Rounds over 4-1/4 inches in diameter shall have hardness of 260 BHN, maximum.

TABLE III. Mechanical properties (age hardened bar; rod, forged parts and plate).

Form	Condition	Diameter or maximum distance between parallel surfaces (inches)	Tensile strength lb/in² (minimum)	Yield 1/ strength at 0.2 percent offset lb/in² (minimum)	Elongation 1/ in 2 inches or 4D, percent (minimum)	Hardness 2/	
						Brinell 3000 kg (minimum)	Rockwell C (minimum)
Rounds 3/ hexagons, squares, rectangles, and forged parts 4/	Hot finished and age hardened	All sizes	140,000	100,000	20.0	265	27
Rounds	Cold drawn and age hardened	1/4 to 1, incl	145,000	110,000	15.0	300	32
		over 1 to 3, incl	140,000	100,000	17.0	280	29
		over 3 to 4, incl	135,000	95,000	20.0	255	25

See footnotes at end of table.

TABLE III. Mechanical properties (age hardened bar; rod, forged parts and plate). - Continued

Form	Condition	Diameter or maximum distance between parallel surfaces (inches)	Tensile strength lb/in² (minimum)	Yield 1/ strength at 0.2 percent offset lb/in² (minimum)	Elongation 1/ in 2 inches or 4D, percent (minimum)	Hardness 2/	
						Brinell 3000 kg (minimum)	Rockwell C (minimum)
Hexagons	Cold drawn and age hardened	1/4 to 2, incl	140,000	100,000	15.0	265	27
Rounds, hexagons, squares, rectangles, and forged parts	Annealed and age hardened 5/	Up to 1	130,000	90,000	20.0	250	24
		1 and over	130,000	85,000	20.0	250	24
Plate	Hot rolled, annealed and age hardened	Up to 4, incl	130,000	80,000	20.0	233	C21

1/ Not applicable to subsize tensile specimens less than 0.250 inch diameter (see 4.4.3.2.1)
2/ Hardness values are given for information only and are not the basis for acceptance or rejection.
3/ Rounds over 4-1/4 inches in diameter shall have an elongation in 2 inches or 4D of 17 percent, minimum.
4/ When specified (see 6.2), for forged rings and discs, hardness measurements may be utilized in lieu of tensile test.
5/ Applicable to both hot finished and cold drawn material.

TABLE IV. Mechanical properties of sheet and strip.

Form and condition	Tensile strength lb/in² (minimum)	Yield strength at 0.2 percent offset 1/ (minimum)	Elongation in 2 inches 1/ percent (minimum)	Rockwell hardness 2/ (minimum)
Sheet:				
Cold rolled and annealed	---	---	---	3/ B85
Cold rolled, annealed, and age hardened	130,000	90,000	15	C24

See footnotes at end of table.

TABLE IV. Mechanical properties of sheet and strip. - Continued

Form and condition	Tensile strength lb/in² (minimum)	Yield strength at 0.2 percent offset 1/ (minimum)	Elongation in 2 inches 1/ percent (minimum)	Rockwell hardness 2/ (minimum)
Strip:				
Cold rolled and annealed	---	---	---	3/ B85
Cold rolled, annealed, and age hardened	130,000	90,000	15	C24
Cold rolled, half hard, as rolled	---	---	---	C20
Cold rolled, half hard, and age hardened	145,000	110,000	8	C30
Cold rolled, full hard, as rolled	---	---	---	C25
Cold rolled full hard and age hardened	170,000	130,000	5	C34

1/ No yield strength or elongation requirements for sheet and strip under 0.020 inch thick.
2/ Hardness values for age hardened material are given for information and are not the basis for acceptance or rejection. For unaged material, tensile tests are not required, except as specified in 4.4.1.3.2.3.
3/ Maximum.

TABLE V. Tensile strength of cold drawn wire in coils.

Condition and size (inches)	Tensile strength lb/in² (minimum)
Cold drawn, as drawn, all sizes	1/ 110,000-155,000
Cold drawn and annealed, all sizes	2/ 110,000
Cold drawn, spring temper, as drawn 0.057 and less 3/	165,000
Over 0.057 to 0.114, inclusive 3/	155,000
Over 0.114 to 0.229, inclusive 3/	150,000
Over 0.229 to 0.312, inclusive 3/	145,000
Over 0.312 to 0.375, inclusive 3/	135,000
Over 0.375 to 0.437, inclusive	125,000
Over 0.437 to 0.563, inclusive	120,000
Cold drawn, annealed and age hardened, all sizes	130,000

See footnotes at end of table.

TABLE V. Tensile strength of cold drawn wire in coils. - Continued

Condition and size (inches)	Tensile strength lb/in² (minimum)
Cold drawn, as drawn, age hardened, all sizes	155,000
Cold drawn, spring temper, and age hardened:	
Up to 0.114, inclusive	180,000
Over 0.114 to 0.375, inclusive	170,000
Over 0.375 to 0.563, inclusive	160,000

1/ Maximum and minimum.
2/ Maximum.
3/ Applicable to material in coil. For material in straightened and cut lengths, deduct 15,000 lb/in² from above values.

TABLE VI. Bending properties of cold rolled sheet and strip.[1/]

Thickness of sheet and strip (inch)		Diameter of cold bend in multiples of the thickness of the material	Degrees of bend		
From	To (incl)		Annealed sheet and strip	Half hard strip	Annealed and age hardened, sheet and strip, and full hard, cold rolled strip
0.010	0.031	1	180	120	90
Over .031	.062	1	180	120	90
Over .062	.125	1	180	120	90
Over .125	.250	2	180	120	90

1/ There are no bending requirements for half hard aged or full hard aged strip.

3.4.1 Unaged material. Material ordered in the unaged condition after proper heat treatment shall be capable of meeting the mechanical properties of the corresponding heat treated condition of the forms specified in tables II through VI, as applicable.

3.4.2 Bending properties (sheet and strip). Sheet and strip, except half hard and age hardened or full hard and age hardened strip, shall not crack when subjected to cold bending, parallel to the direction of rolling, through the angles and around the diameter specified in table VI.

3.4.3 Recovered materials. The offeror/contractor is encouraged to use recovered materials in accordance with Public Law 94-580 to the maximum extent practicable.

3.5 Soundness. Material shall be of uniform quality and condition, free of defects harmful to its intended use, such as seams, pipe, cracks, excessive scale, fins, porosity, and segregation as determined by visual examination and nondestructive testing.

3.5.1 Ultrasonic inspection of large forgings (Form 7). Forgings other than bar and rod with a diameter or minimum distance between parallel surfaces of 4 inches or greater shall be ultrasonically inspected as specified in 4.4.3.3.2 when the forging is of such shape as to permit ultrasonic inspection of 100 percent by volume. Inspection shall be performed after the aging treatment. Ultrasonic procedures other than those specified in 4.4.3.3.2 may be employed but they shall be approved by the command or agency concerned.

3.5.2 Ultrasonic inspection of large bar/rod, forged or rolled (Forms 2 and 7). Bar or rod with a diameter or distance between parallel surfaces of 4 inches or greater shall be ultrasonically inspected as specified in 4.4.3.3.2 after the final aging heat treatment.

3.5.3 Ultrasonic inspection. When specified (see 6.2), bar, rod, plate, and forgings shall be ultrasonically inspected to 4.4.3.3.3.

3.5.4 Liquid penetrant inspection. When specified (see 6.2), bar, rod, plate, and forgings shall be liquid penetrant inspected to 4.4.3.4.

3.6 Wrapping requirements (cold drawn wire).

3.6.1 Wire of cold drawn and annealed and cold drawn, as drawn conditions shall withstand wrapping eight consecutive close wound turns, without cracking, around a rod of the same diameter as the wire.

3.6.2 Wire of spring temper up to 0.2294 inch diameter, inclusive, shall withstand wrapping eight consecutive close wound turns, without cracking, around a rod of the same diameter. Wire over 0.2294 inch in diameter shall withstand similar wrapping, without cracking, around a rod of twice the wire diameter.

3.6.3 There are no wrapping requirements for wire in the age hardened condition or with a diameter greater than 1/4 inch.

3.7 Dimensional requirements (bar and rod).

3.7.1 Cross-sectional dimensions.

3.7.1.1 Hot finished or cold drawn bar and rod, aged and unaged. Diameter, distance between parallel faces, or thickness shall not vary at any point by more than the amounts specified in table VII or VIII, as applicable.

TABLE VII. Tolerances on diameter or distance between parallel faces of hot finished bar and rod.

Ordered diameter or distance between parallel faces (inches)	Tolerances 1/ 4/ (inches)	
	Plus	Minus
Rod and bar, hot finished:		
1 and under	0.016	0.016
Over 1 to 2, incl	.031	.016
Over 2 to 4, incl	.047	.031
Over 4	.125	.063
Round rod, hot finished and rough turned or rough ground:		
1 and over	0.031	.010
Round rod, hot finished, semi-smooth, machined:		
Over 3-1/2	0.031	0
Round rod, hot finished, smooth finish machined:		
Over 3-1/2	0	2/ 0.005
Forging stock (rounds):		
Under 1	0.005	3/ 0.010
1 and over	.031	3/ .010

See footnotes at end of table.

TABLE VII. Tolerances on diameter or distance between parallel faces of hot finished bar and rod. - Continued

Ordered diameter or distance between parallel faces (inches)	Tolerances 1/4/ (inches)	
	Plus	Minus
Forging quality bolt stock (rounds only):		
1/4, 5/16	0	0.0062
3/8, 7/16, 1/2	0	.0066
9/16, 5/8, 11/16, 3/4, 13/16, 7/8	0	.0082
15/16, 1	0	.0098
1-1/16 to 1-1/2, in 1/16 inch increments	0	.0112

1/ Tolerances apply to diameter of rounds, to distance between parallel surfaces for hexagons and squares, and separately to width and thickness of rectangles.
2/ Permissible variations available as plus 0.005 inch, minus 0; or plus 0.0025 inch, minus 0.0025 inch, when specified (see 6.2).
3/ Spot grinding may be permitted to remove minor surface defects. The depth of grinding shall not exceed 3 percent of the diameter.
4/ Areas on the ends of the bar and rod (for approximately 1 inch) that are under the permissible variations in diameter are permitted provided the desired finished surface can be obtained within the machining allowance (see 3.9).

TABLE VIII. Tolerances on diameter or distance between parallel faces of cold drawn rod and bar.

Ordered diameter or distance between parallel faces (inches)	Tolerances (inches)	
	Plus	Minus
Rounds:		
Under 1/2	0	0.003
1/2 to 15/16, incl	0	1/ .002
Over 15/16 to 1-15/16, incl	0	1/ .003
Over 1-15/16 to 2-1/2, incl	0	1/ .004
Over 2-1/2 to 3, incl	0	1/ .005
Over 3 to 3-1/2, incl	0	1/ .006
Over 3-1/2 to 4, incl	0	1/ .007
Hexagons:		
Up to 2, incl	0	.009

1/ For cold drawn, age hardened, bright finish shafting, an additional minus tolerance of 0.002 inch will be permitted (see 6.4.2).

3.7.1.2 Out of roundness. Round rod, cold drawn, and hot finished, all sizes and in straight lengths, shall not be out of round by more than one-half the permissible tolerances in diameter specified in tables VII and VIII.

3.7.1.3 Length (bar and rod).

3.7.1.3.1 Unless otherwise specified (see 6.2), bar and rod shall be furnished in random mill lengths with cut or sheared ends. Rod and bar furnished to nominal (stock) lengths shall be furnished with either cropped or cut ends. Material ordered to cut lengths shall be furnished with square cut or machined ends. Where rod and bar is ordered in multiples of a specified unit length, 1/4 inch shall be allowed for each multiple cut unless otherwise specified (see 6.2), and the rod and bar shall have cut ends.

3.7.1.3.2 The permissible variations in lengths of rod and bar, all conditions, shall be as specified in table IX.

TABLE IX. Permissible variations in length of bar and rod, all conditions.

Specified length, feet	Shortest acceptable length, feet	Maximum acceptable length	Maximum permissible percentage by weight of short lengths
Random mill lengths 1/	6	24 ft	25 percent under 9 ft
Nominal (stock) length 2/			
16 to 18	16	18 ft, 1/2 in	100 percent 16 ft or longer
14 to 16	14	16 ft, 1/2 in	100 percent 14 ft or longer
12 to 14	12	14 ft, 1/2 in	100 percent 12 ft or longer
Nominal (stock) length 2/			
3/ 10 to 12	10	12 ft, 1/2 in	100 percent 10 ft or longer
3/ 8 to 10	8	10 ft, 1/2 in	100 percent 8 ft or longer
3/ 6 to 8	6	8 ft, 1/2 in	100 percent 6 ft or longer
4 to 6	4	6 ft, 1/2 in	100 percent 4 ft or longer
Cut-to length 4/	Specified length	Specified length plus 1/8 in	100 percent specified length to plus 1/8 in

See footnotes at top of next page.

1/ For hot finished sections weighing over 25 pounds per lineal foot and for smooth forged products, all sections, short lengths down to 2 feet may be furnished.
2/ Other nominal lengths with a specified range of not less than 2 feet, with no shorts allowed, may also be furnished.
3/ For cold drawn rod and bar under 1/2 inch in diameter or distance across flats ordered to nominal or stock lengths with a 2 foot range, at least 93 percent of such material shall be within the range specified; the balance may be in shorter lengths but in no case shall lengths less than 4 feet be furnished.
4/ For diameters over 8 inches, the tolerance shall be plus 1/4 inch minus 0.

3.7.1.4 Edges. Unless otherwise specified (see 6.2), square, rectangular, and hexagonal bar and rod shall have angles and corners consistent with commercial practice.

3.7.1.5 Straightness. The permissible variations in straightness of rod and bar, as determined by the departure from the true straightness (throw in one revolution or depth of chord), shall be as specified in tables X and XI.

TABLE X. Permissible variations in straightness of rod and bar.[1/]

Ordered condition, finish, and size	Permissible deviations in straightness (inches)
Hot finished:[2/]	Depth of chord[3/]
Bar and rod (hot finished surface)	0.050 per foot of length
Rounds:	Throw in one revolution[4/]
Rough turned or rough ground	0.050 per foot of length
Semismooth machined	.0031 per foot of length
Smooth finished machined	.0015 per foot of length
Cold drawn:	
Rounds (diameter):	Depth of chord[3/]
Up to 4 inches, incl	0.030 per foot of length
Hexagons and squares:	Depth of chord[3/]
All sizes	0.030 per foot of length

1/ Not applicable to forging quality rod.
2/ Except forging quality stock.
3/ The maximum curvature (depth of chord) shall not exceed the value indicated multiplied by length in feet.
4/ The throw in one revolution in any 20 feet maximum length shall not exceed the values indicated multiplied by length in feet.

TABLE XI. Permissible variations in straightness of precision straightened cold drawn shafting.

Ordered diameter of shafting (inches)	Standard distance between supports (inches)	Permissible variations throw in one revolution from straightness (inches)
1/2 to 15/16, incl	42	0.005
Over 15/16 to 1-15/16, incl	42	.006
Over 1-15/16 to 2-1/2, incl	42	.007
Over 2-1/2 to 4 incl	42	.008
3/4 to 15/16, incl	Specified lengths of 3 to 10 feet	0.004 plus 0.0025 for each foot, or fraction thereof, in excess of 3 feet.
Over 15/16 to 4 incl	Specified lengths of 20 feet and less	0.005 plus 0.0015 for each foot, or fraction thereof, in excess of 3 feet.

3.7.1.5.1 The permissible variations in straightness of precision straightened cold drawn rod and shafting, as determined by the departure from straightness (throw in one revolution), shall be as specified in table XI. All precision straightened rod shall be checked for straightness when supported on rollers at 42 inch intervals, and also on rollers on the ends of the rod, in diameters and lengths, as specified in table XI.

3.7.2 Forged parts dimensions. All forgings shall conform to the sizes and shapes as specified (see 6.2). The responsibility of furnishing forgings that can be laid out and machined to the finished dimensions within the specified tolerances as shown on the drawings, and that will conform to such gauges as may be specified in the individual cases, shall rest with the contractor.

3.7.3 Plate, sheet, and strip.

3.7.3.1 Thickness. The thickness tolerances of cold rolled nickel-copper-aluminum alloy sheet and strip, all conditions, shall conform to the requirements specified in table XII. The tolerances on thickness of hot rolled nickel-copper-aluminum alloy plate, all conditions, shall conform to the requirements specified in table XIII.

TABLE XII. Tolerances on thickness of cold rolled sheet and strip, all conditions.

Ordered thickness (inches)	Tolerances on thickness for widths given 1/ (inches)	
	Sheet	
	48 inches and under plus or minus	Over 48 to 60 inches, incl plus or minus
0.018 to 0.025, incl	0.002	0.003
Over 0.025 to 0.034, incl	.003	.004
Over .034 to .043, incl	.004	.005
Over .043 to .056, incl	.004	.005
Over .056 to .070, incl	.005	.006
Over .070 to .078, incl	.006	.007
Over .078 to .093, incl	.007	.008
Over .093 to .109, incl	.007	.009
Over .109 to .125, incl	.008	.010
Over .125 to .140, incl	.008	.010
Over .140 to .171, incl	.009	.012
Over .171 to .187, incl	.010	.013
Over .187 to .218, incl	.011	.015
Over .218 to .234, incl	.012	.016
Over .234 to .250, incl	.013	.018
	Strip Widths - 12 inches and less Plus or minus 1/	
0.010 to 0.050, incl	0.0015	
Over 0.050 to 0.093, incl	.0025	
Over 0.093 to 0.125, incl	.004	
Over 0.125 to 0.156, incl 2/	3/ .0045	
Over 0.156 to 0.250, incl 2/	3/ .0055	

1/ Measured 3/8 inch or more from any edge except for strip under 1 inch in width which is measured at any place.
2/ Available in straightened and cut lengths only.
3/ For widths over 8 inches, the permissible variations for cold rolled sheet are applicable.

TABLE XIII.. Permissible variations in weight and thickness of hot rolled rectangular plate. 1/2/

Specified 3/ thickness (inches)	Permissible excess in average weight 4/ per square foot of plate for widths given in inches expressed in percentage of nominal weights									
	Under 48	40 to 60, excl	60 to 72, excl	72 to 84, excl	84 to 96, excl	96 to 108, excl	108 to 120, excl	120 to 132, excl	132 to 144, excl	144 to 160 excl
3/16 to 5/16, excl	9.0	10.5	12.0	13.5	15.0	16.5	18.0	---	---	---
5/16 to 3/8, excl	7.5	9.0	10.5	12.0	13.5	15.0	16.5	18.0	---	---
3/8 to 7/16, excl	7.0	7.5	9.0	10.5	12.0	13.5	15.0	16.5	18.0	---
7/16 to 1/2, excl	6.0	7.0	7.5	9.0	10.5	12.0	13.5	15.0	16.5	18.0
1/2 to 5/8, excl	5.0	6.0	7.0	7.5	9.0	10.5	12.0	13.5	15.0	16.5
5/8 to 3/4, excl	4.5	5.5	6.0	7.0	7.5	9.0	10.5	12.0	13.5	15.0
3/4 to 1, excl	4.0	4.5	5.5	6.0	7.0	7.5	9.0	10.5	12.0	13.5
1 to 1-1/4, excl	4.0	4.0	4.5	5.5	6.0	7.0	7.5	9.0	10.5	12.0
1-1/4 to 1-1/2, excl	4.0	4.0	4.5	5.5	6.0	7.0	7.5	9.0	10.5	---
1-1/2 to 1-3/4, excl	4.0	4.0	4.5	5.5	6.0	7.0	7.5	9.0	---	---
1-3/4 to 2, incl	4.0	4.0	4.5	5.5	6.0	7.0	7.5	---	---	---

1/ The term "lot" applied to the above table means all of the plate of each group width and each group thickness.
2/ No plates shall vary more than 0.01 inch under the thickness ordered, and the overweight of each lot in each shipment shall not exceed the amount shown in the table. Spot grinding will be permitted to remove surface imperfections, such spots not to exceed 0.01 inch under the specified thickness.
3/ All plates shall be ordered by thickness and not weight, per square foot.
4/ The weight of individual plates shall not exceed the nominal weight by more than 1-1/4 times the amount shown.

3.7.3.2 Width. The width of sheet and strip shall not vary from the ordered width by more than the amount specified in table XIV and those for plate shall be as specified in table XV.

TABLE XIV. Tolerances on width of sheet and strip, all conditions.

Ordered thickness (inches)	Ordered width (inches)	Tolerances on widths (inches)	
		Plus	Minus
Cold rolled sheet			
All thickness	All widths	0.125	0
Cold rolled strip			
Split edge:			
0.010 to 0.024, incl	12 and under	0.007	0.007
Over 0.024 to 0.075, incl	12 and under	.007	.007
Over 0.075 to 0.100, incl	12 and under	.009	.009
Over 0.100 to 0.125, incl	12 and under	.012	.012
Over 0.125 to 0.250, incl 1/	8 and under	.015	.015
Over 0.125 to 0.250, incl 1/2/	Over 8 to 12, incl	.125	0

1/ Available in straightened and cut lengths only.
2/ Slit edge or sheared edge.

TABLE XV. Permissible variations in width of sheared, machined, abrasive or plasma torch cut rectangular plate. 1/2/

Specified thickness (inches)	Permissible variation in width for widths given (inches)									
	Up to 30, incl		Over 30 to 72, incl		Over 72 to 108, incl		Over 108 to 144, incl		Over 144 to 160, incl	
	plus	minus	plus	minus	plus	minus	plus	minus	plus	minus
Sheared: 3/										
3/16 to 5/16, excl	3/16	1/8	1/4	1/8	3/8	1/8	1/2	1/8	---	---
5/16 to 1/2, excl	1/4	1/8	3/8	1/8	3/8	1/8	1/2	1/8	5/8	1/8
1/2 to 3/4, excl	3/8	1/8	3/8	1/8	1/2	1/8	5/8	1/8	3/4	1/8
3/4 to 1, excl	1/2	1/8	1/2	1/8	5/8	1/8	3/4	1/8	7/8	1/8
1 to 1-1/4, incl	5/8	1/8	5/8	1/8	3/4	1/8	7/8	1/8	1	1/8
Machined or abrasive cut: 4/5/										
3/16 to 1-1/4, incl	1/8	1/8	1/8	1/8	1/8	1/8	1/8	1/8	1/8	1/8
Over 1-1/4 to 4 incl	3/16	1/8	3/16	1/8	3/16	1/8	3/16	1/8	3/16	1/8
Plasma torch cut: 6/										
3/16 to 2, excl	1/2	0	1/2	0	1/2	0	1/2	0	1/2	0
2 to 3, incl	5/8	0	5/8	0	5/8	0	5/8	0	5/8	0

See footnotes at top of next page.

1/ Permissible variations in width for powder cut or inert arc cut plate or machined, powder cut or inert arc cut circular plate shall be as agreed upon between the manufacturer and the Command or agency concerned.
2/ Tolerances for plasma torch cut sketch plate shall be as agreed upon between the manufacturer and the Command or agency concerned.
3/ The minimum sheared width is 10 inches for material 3/4 inch and under in thickness and 20 inches for material over 3/4 inch in thickness.
4/ The minimum abrasive cut width is 2 inches.
5/ Tolerances shown are applicable for lengths up to 240 inches. For lengths over 240 inches an additional 1/16 inch is permitted, both plus and minus.
6/ Tolerances shown for plasma torch cutting may be obtained all on the minus side, or divided between the plus and minus side, as specified (see 6.2).

3.7.3.3 Lengths.

3.7.3.3.1 Sheet. Unless otherwise specified (see 6.2), sheet shall be furnished in cut lengths. The permissible variation in length shall be plus 1/8 inch, minus nothing.

3.7.3.3.2 Strip.

3.7.3.3.2.1 Unless nominal or stock lengths or cut lengths are specified, strip, in conditions other than age hardened, shall be furnished in coil in thicknesses up through 0.125 inch and in random straight lengths in thicknesses over 0.125 inch. Unless otherwise specified (see 6.2), age hardened strip shall be furnished in straightened (cut) lengths only.

3.7.3.3.2.2 The length of cut length strip shall not vary under or over the ordered length by more than 1/8 inch.

3.7.3.3.2.3 Nominal or stock lengths. The length of strip up to 12 inches wide, ordered as nominal or stock lengths, shall not vary from the ordered nominal or stock length by more than 1/2 inch, except for the permissible amounts of short lengths specified in table XVI. The maximum percentage by weight of short lengths, and the required percentage by weight of ordered stock lengths, in any shipment shall be as specified in table XVI.

TABLE XVI. Permissible variations in stock lengths of strip, up to 12 inches wide.

Ordered nominal or stock length (feet)	Required percentage by weight of stock length	Maximum permissible percentages, by weight, of short lengths				
		Over 8 to 10 feet, incl	Over 6 to 8 feet, incl	Over 4 to 6 feet incl	Over 2 to 4 feet incl	Under 2 feet
10	60	40	30	20	10	0
8	70	--	30	20	10	0
6	80	--	--	20	10	0

3.7.3.3.3 The permissible variations in length for plate shall be as specified in table XVII.

TABLE XVII. Permissible variations in length of sheared, machined, abrasive or plasma torch cut rectangular plate. 1/

Specified thickness (inches)	Permissible variation in length for lengths given (inches)													
	60 and under		Over 60 to 96, incl		Over 96 to 120, incl		Over 120 to 240, incl		Over 240 to 360, incl		Over 360 to 450, incl		Over 450 to 540, incl	
	plus	minus	plus	minus	plus	minus	plus	minus	plus	minus	plus	minus	plus	minus
Sheared: 2/														
3/16 to 5/16, excl	3/16	1/8	1/4	1/8	3/8	1/8	1/2	1/8	5/8	1/8	3/4	1/8	---	---
5/16 to 1/2, excl	3/8	1/8	1/2	1/8	1/2	1/8	1/2	1/8	5/8	1/8	3/4	1/8	7/8	1/8
1/2 to 3/4, excl	1/2	1/8	1/2	1/8	5/8	1/8	5/8	1/8	3/4	1/8	7/8	1/8	1-1/8	1/8
3/4 to 1, excl	5/8	1/8	5/8	1/8	5/8	1/8	3/4	1/8	7/8	1/8	1-1/8	1/8	1-3/8	1/8
1 to 1-1/4, incl	3/4	1/8	3/4	1/8	3/4	1/8	7/8	1/8	1-1/8	1/8	1-3/8	1/8	1-5/8	1/8
Machined or abrasive cut: 3/														
3/16 to 1-1/4, incl	1/8	1/8	1/8	1/8	1/8	1/8	1/8	1/8	1/8	1/8	1/8	1/8	1/8	1/8
Over 1-1/4 to 4, incl	3/16	1/8	3/16	1/8	3/16	1/8	3/16	1/8	3/16	1/8	3/16	1/8	3/16	1/8
Plasma Torch cut: 4/5/														
3/16 to 2, incl	1/2	0	1/2	0	1/2	0	1/2	0	1/2	0	1/2	0	1/2	0
2 to 2-1/4	5/8	0	5/8	0	5/8	0	5/8	0	5/8	0	5/8	0	5/8	0

See footnotes at top of next page.

1/ Permissible variations in length for powder cut or inert arc cut plate or machined, powder cut or inert arc cut circular plate shall be as agreed upon between the manufacturer and the Command or agency concerned.
2/ The minimum sheared length is 10 inches.
3/ Abrasive cut applicable to a maximum length of 144 to 400 inches depending on the thickness and width ordered.
4/ Tolerances for plasma torch cut sketch plate shall be as agreed upon between the manufacturer and the Command or agency concerned.
5/ Tolerances for plasma torch cutting may be obtained all on the minus side, or divided between the plus or minus side as specified (see 6.2).

3.7.3.3.3.1 Unless otherwise specified (see 6.2), plate 1 inch thick and under shall be furnished with a sheared edge, and plate over 1 inch shall be furnished with machined, abrasive, or plasma torch cut edges.

3.7.3.3.3.2 Circular plate shall have a permissible variation in diameter as specified in table XVIII.

TABLE XVIII. Permissible variation in diameter for circular plate.

Specified diameter (inches)	Permissible variations over specified diameter for thickness given (inches)				
Sheared plate: 1/	Thickness to 3/8, incl				
20 to 32, excl	1/4				
32 to 84, excl	5/16				
84 to 108, excl	3/8				
108 to 140, excl	7/16				
	Thickness (inches, maximum)	3/16 to 2, excl		2 to 3, excl	
		Plus	Minus	Plus	Minus
Plasma torch cut plate: 2/3/					
19 to 20, excl	3	1/2	0	5/8	0
20 to 22, excl	2-3/4	1/2	0	5/8	0
22 to 24, excl	2-1/2	1/2	0	5/8	0
24 to 28, excl	2-1/4	1/2	0	5/8	0
28 to 32, excl	2	1/2	0	5/8	0
32 to 34, excl	1-3/4	1/2	0	---	---
34 to 38, excl	1-1/2	1/2	0	---	---
38 to 40, excl	1-1/4	1/2	0	---	---
40 to 140, excl	3	1/2	0	5/8	0

1/ No permissible variation under.
2/ The tolerance for plasma cut plate may be obtained all minus or divided between the plus and minus sides, as specified (see 6.2).
3/ Permissible variations in plasma torch cut sketch plate shall be as agreed upon between the manufacturer and the Command or agency concerned.

3.7.3.4 Edges.

3.7.3.4.1 Sheet. Unless otherwise specified (see 6.2), sheet shall be furnished with edges as would result from slitting, sawing, or shearing.

3.7.3.4.2 Strip. Unless otherwise specified (see 6.2), strip shall be furnished with the type of edge as specified in table XIX.

TABLE XIX. Type of edge of strip.

Thickness (inches)	Width (inches)	Type of edge
0.125 and less	12 and less	Slit 1/
Over 0.125	8 and less	Slit 2/
Over 0.125	Over 8	Slit or sheared 2/

1/ In coil or straight (random or cut) lengths.
2/ In random or cut straight lengths only.

3.7.3.4.3 Plate. Unless otherwise specified (see 6.2), plate 1-1/4 inches in thickness and less shall be furnished with sheared edges; and plate over 1-1/4 inches in thickness shall be furnished with machined edges.

3.7.3.5 Straightness. The edgewise curvature or maximum departure from straight line in any longitudinal edge on sheet and strip cut to length or in random, nominal or stock lengths shall not exceed 0.05 inch per foot of length.

3.7.4 Wire.

3.7.4.1 Diameter. The permissible tolerances in diameter of all conditions of wire shall be as specified in table XX.

TABLE XX. Tolerances in diameter of cold drawn wire, all conditions.

Specified diameter (inches)	Tolerances (inches)	
	Plus	Minus
To 0.0044, incl	0.0002	0.0002
Over 0.0044 to 0.0079, incl	.00025	.00025
Over 0.0079 to 0.0149, incl	.0003	.0003
Over 0.0149 to 0.0199, incl	.0004	.0004
Over 0.0199 to 0.031, incl	.0005	.0005
Over 0.031 to 0.045, incl	.0006	.0006
Over 0.045 to 0.079, incl	.0007	.0007
Over 0.079 to 0.1875, incl	.001	.001
Over 0.1875 to 0.406, incl	.001	.002
Over 0.406	.002	.002

3.7.4.2 Out of roundness. Wire shall not be out of round by more than one-half the total permissible tolerances specified in table XX.

3.7.4.3 Coil and spool weights. Permissible variations in coil and spool weights of cold drawn wire shall be as specified in tables XXI and XXII (see 6.2).

TABLE XXI. Permissible variation in weight of cold drawn wire in coils and on spools (except Air Force use).

Condition	Wire diameter (inches)	Standard spool weight (pounds)	Maximum weight of wire on each spool (pounds)
Spools (all conditions)	Under 0.010	2	2-1/2
	0.010 to 0.018, incl	5	6
	Over 0.018 to 0.040, incl	10	15
Coils (all conditions)		Approximate mean coil diameter (inches)	Maximum weight per coil (pounds)
	Under 0.010	8	15
	0.010 to 0.018, incl	8	25
	Over 0.018 to 0.040, incl	8 to 12	40
	Over 0.040 to 0.081, incl	16 to 20	100
	Over 0.081 to 0.312, incl	18 to 22	200
	Over 0.312 to 0.563, incl	22 to 30	200

TABLE XXII. Permissible variation in weight of wire in coils and on spools (Air Force use only).

Condition	Wire diameter (inches)	Core diameter (inches)	Maximum weight wire on each spool (pounds)
All conditions	Under 0.035	1	1
	0.035 to 0.063, incl	4 to 5	1
	0.064 to 0.0915, incl	---	5
	0.0916 to 0.162, incl	---	1/ 25

1/ Coil.

3.8 Marking. Unless otherwise specified (see 6.2), bar, rod, sheet, strip, and plate shall be marked in accordance with FED-STD-182 and in addition, shall be marked with the lot number. Individual forgings shall be marked with the specification number, heat and lot number. Identification number and markings shall not be made by chisel or other sharp instruments.

3.9 Machining allowance for hot finished material.

3.9.1 Machining allowances shall be made for hot finished material as specified in table XXIII.

TABLE XXIII. Machining allowances for hot finished rod and bar (allow the following oversizes).

Finished dimensions 1/ (inches)	Machining allowances (inch) 2/			
	Diameter	Across flats for hexagons and squares	Thickness for rectangles	Width for rectangles
0.875 and under	0.125	0.125	0.125	0.187
Over 0.875 through 1.875	.125	.187	.125	.187
Over 1.875 through 2.875	.187	.250	----	.187
Over 2.875 through 3.812	.250	----	----	.187
Over 3.812	.250	----	----	.375

Finished diameter 3/ (inches)	Diameter (inches)	Length (feet)
Rough turned or rough ground		
0.500 through 0.875	0.005	2/
Over 0.875 through 4.000	.062	2/
Over 4.000 through 12.000	.125	2/
Over 12.000 through 20.000	.125	2/
Semismooth machined		
Over 2.500 through 4.000	0.062	10 maximum
Over 2.500 through 4.000	.125	Over 10 to 20 maximum
Over 4.000 through 10.000	.125	30 maximum

1/ Dimensions apply to diameter of rods, distance between parallel surfaces of squares and hexagons, and separately to width or thickness of rectangles.

2/ The allowances are recommended for rounds to be machined in lengths 36 inches or less (such as stepdown shafts) and for squares, hexagons, and rectangles to be machined in lengths 24 inches or less. Lengths longer than those cited should show the finish, cross-sectional dimensions, and also the length in which the material is to be machined in order that material may be supplied with sufficient oversize, including allowance for out-of-straightness.

3/ The allowance for hot finished rod, rough turned or semismooth machined, provide for sufficient excess metal to insure straightness in finished shafts within the limits indicated above.

3.10 Uniformity of grain size. The uniformity of grain size shall be determined for bar and rod as specified in 4.4.3.5. Plate, sheet, strip and wire shall be excluded form the grain size examination. The difference in average grain size between the two specimens shall be reported for information unless otherwise specified (see 6.2).

3.11 Workmanship. The material shall be uniform in quality and condition, clean, smooth, flat, commercially straight, and be free from foreign material and imperfections such as pipe, laps, cracks and seams which, due to their nature, degree, or extent may detrimentally affect the suitability for the service intended. Products ordered with a hot finished, rough turned or semismooth machined surface may contain surface imperfections that shall not be considered injurious unless they exceed the recommended machining allowance specified in table XXIII. Inspection procedures for hot finished or machined material shall be as specified in 4.4.2.2.1.1.

4. QUALITY ASSURANCE PROVISIONS

4.1 Responsibility for inspection. Unless otherwise specified in the contract, the contractor is responsible for the performance of all inspection requirements as specified herein. Except as otherwise specified in the contract, the contractor may use his own or any other facilities suitable for the performance of the inspection requirements specified herein, unless disapproved by the Government. The Government reserves the right to perform any of the inspections set forth in the specification where such inspections are deemed necessary to assure that supplies and services conform to prescribed requirements.

4.1.1 Responsibility for compliance. All items shall meet all requirements of sections 3 and 5. The inspection set forth in this specification shall become a part of the contractor's overall inspection system or quality program. The absence of any inspection requirements in the specification shall not relieve the contractor of the responsibility of ensuring that all products or supplies or supplies to the Government for acceptance comply with all requirements of the contract. Sampling inspection, as part of manufacturing operations, is an acceptable practice to ascertain conformance to requirements, either indicated or actual, nor does it commit the Government to accept defective material.

4.1.1.1 Certification of quality conformance. Certification of quality conformance shall be furnished with each lot of material offered for acceptance. The certification shall provide quantitative results for all specified chemical and mechanical tests. For material supplied in the unaged condition, the certification shall prominently display in bold face type lettering the words: "AS SUPPLIED MATERIAL CONDITION IS UNAGED", and shall also include the statement: "This certifies that the material contained in this lot, when properly age hardened, is capable of meeting the mechanical properties for the corresponding age hardened condition specified in QQ-N-286."

4.2 Classification of inspections. The inspection requirements specified herein are classified as follows:

a. First article inspection (see 4.3).
b. Quality conformance inspection (see 4.4).

4.3 First article inspection.

4.3.1 First article sample. Sufficient sample shall be taken from each heat to perform the below cited tests and inspections. Sample material shall have been hot worked and age hardened. The sample shall be from the finished condition wrought form and taken when the material is over 4 inches in diameter or distance between parallel surfaces.

4.3.2 First article tests. Failure to meet the acceptance criteria identified below shall be cause for rejection of the lot represented by the samples (see 6.3).

4.3.2.3 Slow strain rate tensile test.

4.3.2.3.1 Samples. Three specimens for slow strain rate tensile testing shall be taken from the center of one end of a bar, rod or forging representing each heat. Each specimen shall be machined to the form and dimensions of a 9/16 - 12 UNC Class 2, continously threaded stud with a test length of 1 inch between crossheads.

4.3.2.3.2 Procedure. Each specimen shall be tested at a temperature of 400°F and a displacement rate not exceeding 0.001 inches per minute. After fracture, the entire circumference of the fracture surface shall be examined using a scanning electron microscope at 200X magnification to determine fracture mode. The evaluated areas shall contain the outer edge of the specimen and the maximum amount of the fracture surface. Higher magnification may be used, if required, to evaluate area where the fracture mode can not be determined.

4.3.2.3.1 Acceptance criteria. The fracture area examined shall not exhibit evidence of intergranular fracture on more that 5 percent of the area examined.

4.4 Quality conformance inspection

4.4.1 Sampling.

4.4.1.1 Lot.

4.4.1.1.1 For visual and grain size inspections and mechanical tests. Unless otherwise specified (see 6.2), a lot shall consist of material of one heat, condition, finish (for visual only), and size and heat treated in the

same furnace charge when ordered in the heat treated condition. Heat treated conditions shall include age hardened, annealed and age hardened, and annealed only. (For mechanical tests, size shall refer to the same thickness of sheet, strip, or plate, and the same cross-section of other products.)

4.4.1.1.2 For chemical analysis. A lot shall consist of material from one heat.

4.4.1.2 Sampling for chemical analysis. One representative sample shall be obtained from each lot. Ladle analysis may be used. For wire 0.032 inch diameter and less, samples may be taken from the final starting size prior to the final cold reduction.

4.4.1.3 Sampling for mechanical tests.

4.4.1.3.1 Rod, bar, wire, and flat products. One tensile specimen shall be taken from each lot of 30,000 pounds, or less. Two tensile specimens shall be taken from lots weighing over 30,000 pounds.

4.4.1.3.1.1 Wire wrapping test. One specimen shall be taken from each lot of 30,000 pounds, or less. Two specimens shall be taken from lots weighing over 30,000 pounds.

4.4.1.3.2 Forged parts.

4.4.1.3.2.1 Forged parts, 250 pounds and less. Samples from the lot shall be provided with prolongations unless shape of finished parts permits a suitable sample to be removed without loss of the forging, or the producer may provide extra forgings for test. One test required for lots of 30,000 pounds or less and two tests required for lots over 30,000 pounds.

4.4.1.3.2.2 Forged parts, greater than 250 pounds. Each forging shall be tested. Prolongations shall be provided on each forging unless shape of finished parts permits a suitable sample piece to be removed without loss of the forging.

4.4.1.3.2.3 Unaged material. For material ordered in the unaged condition, one test specimen shall be taken from each lot as defined in 4.2.1. The specimen shall be obtained from the actual material to be shipped or from a forged test coupon when applicable. The specimen shall be aged, or annealed and aged, as required by the applicable table, III, IV, or V. Tests shall not be required when the unaged material can be identified with a material lot which has previously been tested in the specified condition (either aged, or annealed and aged, as required by table III, IV, or V) and found to meet the requirements of this specification.

4.4.1.4 Sampling for visual and dimensional examination.

4.4.1.4.1 Small forged parts (less than 250 pounds) and all other forms. From each lot, representative samples for inspection of visual and dimensional characteristics including packaging, packing, and marking requirements shall be taken with lot acceptance in accordance with MIL-STD-105, general inspection level 3 of normal plan, single, acceptance quality level (AQL) 1.5. In case of wire, a unit shall be one coil of wire.

4.4.1.4.2 Forged parts weighing 250 pounds or more. Each forging weighing 250 pounds or more shall be subjected to surface inspection for workmanship and dimensions.

4.4.1.5 Sampling for nondestructive tests.

4.4.1.5.1 Ultrasonic tests. When specified (see 3.5.1, 3.5.2, and 3.5.3) each piece of each lot shall be inspected 100 percent by volume.

4.4.1.5.2 Liquid penetrant tests. When specified (see 6.2), each piece of each lot shall be inspected.

4.4.1.6 Sampling for grain size. A sample for grain size evaluation shall be taken from a slice at least 3/8 inch thick from one end of a bar, rod or forging representing each heat treat lot.

4.4.2 Examination methods.

4.4.2.1 Straightness.

4.4.2.1.1 Straightness (rod). In determining straightness in the standard 42 inch distance between supports or in determining straightness when supported at the ends, the rod shall be placed on a precision table equipped with ballbearing rollers and a micrometer or dial indicator. The rod shall then be rotated slowly against the indicator, and the deviation from straightness in any portion of the rod between the supports shall not exceed the permissible variations specified in tables X and XI. The deviation from straightness (throw in one revolution) is defined as the difference between the maximum and minimum readings of the dial indicator in one complete revolution of the rod. Straightness in terms of depth of chord shall be determined with a straightedge, the length of which is not less than that of the piece being measured.

4.4.2.1.2 Straightness (bar, sheet, and strip). Straightness in terms of depth of chord shall be determined with a straightedge and shall not exceed the permissible variations in table X and 3.5.3.5.

4.4.2.2 Visual and dimensional.

4.4.2.2.1 Each sample taken in accordance with MIL-STD-105, AQL 1.5 shall be subjected to surface inspection for workmanship and dimensions. Any sample unit containing one or more visual or dimensional defects shall be rejected;

and if the number of defective units in any sample exceeds the acceptance number for that sample, the lot represented by the sample shall be rejected.

4.4.2.2.1.1 Inspection of hot finished material. Rod or bar surface shall be examined to locate imperfections of maximum severity. These imperfections shall be explored by grinding, filing, or otherwise reducing the cross-section dimension at the site of the imperfection. Sufficient material shall be removed to reach the bottom of the imperfection. The cross-section dimension is measured at this point. If the depth of the imperfection does not exceed the machining allowance in table XXIII for the applicable size and form, the product will be acceptable.

4.4.3 Test procedures.

4.4.3.1 Chemical analysis. The sample selected in accordance with 4.3.1 shall be analyzed by the wet chemical or spectrochemical methods to determine conformance with table I. In case of disagreement, the chemical composition shall be determined in accordance with ASTM E 76.

4.4.3.2 Mechanical tests.

4.4.3.2.1 Bar, rod, rectangles, and forged parts. All bar, rod, rectangles, and forged parts shall be pulled full-size when practicable. When a machined specimen becomes necessary, enough metal may be removed from the gauge section to meet the limitations of the testing machine or the specimen may be machined to the form and dimensions of the largest standard round specimen in ASTM E 8 obtainable from the product being tested. When the product being tested is of such size that an ASTM E 8 round specimen less than 0.250 inch diameter is needed, minimum elongation requirements of table III shall not apply.

4.4.3.2.1.1 For bar, rod, rectangles, and forged parts up to and including 1-1/2 inches in diameter or thickness, the axis of the test specimen shall coincide with the central axis of the piece; over 1-1/2 inches, the axis shall be located midway between the center and surface of the piece.

4.4.3.2.1.2 The axis of tension test specimens for bar, rod, rectangles, and forged parts shall be parallel to the direction of rolling, drawing, or flow of metal.

4.4.3.2.1.3 Unless otherwise specified (see 6.2), rod and bar intended for reforging will not require mechanical tests.

4.4.3.2.3 Plate, sheet, and strip.

4.4.3.2.3.1 Tension test specimens for plate, sheet, and strip under 0.500 inch thick shall be machined to the form and dimensions of a standard 2 inch gauge length flat in conformance to ASTM E 8. Tension test specimens for plates 0.500 inch and over in thickness shall be machined to the form and

dimensions of the largest obtainable standard round in conformance to ASTM E 8.

4.4.3.2.3.2 Tensile specimens from plate, sheet, and strip shall be taken transverse to the direction of rolling when width will permit.

4.4.3.2.4 Wire.

4.4.3.2.4.1 Tension test specimens shall be of the full cross-section of the wire and not less than 15 inches in length. Specimens shall be free from sharp bends or kinks. The distance between the jaws of the testing machine, with the specimen in place ready for testing, shall be not less than 10 inches.

4.4.3.2.4.2 Wrapping test specimens shall be full-size sections of wire of a suitable length. The specimens shall be wrapped around a rod as specified in 3.4.1 and 3.4.2 and examined for cracks by liquid penetrant inspection.

4.4.3.2.5 Yield strength. The yield strength shall be determined by the offset method.

4.4.3.2.6 Hardness. The hardness shall be determined in accordance with ASTM E 10 or E 18, as applicable.

4.4.3.2.7 Rejection and retests. If any specimen fails to meet the requirements of this specification, the entire lot shall be rejected, subject to the retest provisions specified in 4.4.3.2.7.1 and 4.4.3.2.7.2.

4.4.3.2.7.1 If any test specimen shows defective machining or develops flaws, it may be discarded and another specimen substituted.

4.4.3.2.7.2 If the percentage elongation of any tension test specimen is less than that specified and any part of the fracture is outside of the middle two-thirds of the gauge length or in a punched or scribed mark within the reduced section, a retest will be allowed.

4.4.3.3 Ultrasonic test.

4.4.3.3.1 General test requirements.

4.4.3.3.1.1 Ultrasonic testing shall be performed in accordance with MIL-STD-271, as modified by the requirements specified herein. All inspections shall be performed using the contact or immersion methods.

4.4.3.3.1.2 Round rod, 1-3/16 inches and under, shall be ordered with a ground or turned surface when ultrasonic testing is specified.

4.4.3.3.1.3 Surface finish. Hot finished surfaces shall be 250 Ra micro inches or smoother.

4.4.3.3.1.4 Accoustical compatibility check. Due to the variable attenuation of nickel-copper-aluminum, an attenuation check shall be performed before each inspection where a reference standard is used. A comparison shall be made between the part to be inspected and the specific reference standard to be used. For longitudinal wave inspections, the attenuation check shall be based on a comparison between a back reflection obtained from similar geometrical areas on the part to be inspected and the reference standard. For shear wave inspections, the attenuation check shall be based on a comparison between a corner reflection signal or a pitch-catch signal obtained from similar geometrical areas on the part to be inspected and the reference standard. A minimum of three areas shall be evaluated on the component to be inspected. Differences in attenuation, measured in dB, shall be compensated for by adding or subtracting the appropriate number of dB form the instruments gain setting after the calibration reflector height or DAC curve is determined and marked on the screen. The most attenuative area evaluated shall be used to determine the attenuation correction value. If the attenuation checks indicate less than a 1 dB difference, no correction is required. When acoustic compatibility check is performed, the reference standard does not need to meet the signal amplitude comparison test in the acoustic similarity requirements of MIL-STD-271.

4.4.3.3.2 Procedure for ultrasonic inspection for large size bars, rods and forgings. Coarse grained material may result in an unacceptable ultrasonic signal to perform the required inspections. A single, distinct signal which is clearly discernable from noise shall be used for the inspections. If such a signal is not obtainable using the lowest frequency allowed and with the transducers positioned for the shortest sound path, the material shall be considered noninspectable and rejected. Inspection shall be performed using either longitudinal wave end scan or shear wave pitch-catch methods as specified in 4.4.3.3.2.1 through 4.4.3.3.2.2. When the procedures of 4.4.3.3.2.1 are applied to long bars/rods, ultrasonic instruments with high-engery pulsers and extended range capability may be required.

4.4.3.3.2.1 Longitudinal wave end scan. Inspection shall be performed from the end of the form as illustrated on figure 1. A 1 inch diameter, 2.25 MHz transducer shall be used whenever possible. If the 2.25 MHz transducer does not result in a valid calibration, a one inch diameter, 1 MHz transducer may be used and the reason why documented on the test report. A distance calibration shall be made for the length tested. This shall be accomplished using multiple reflections across the cross-section of the test piece or by the use of a nickel-copper-aluminum reference standard. The signal from the opposite end shall be set to a minimum of 80 percent full screen height. Ensure that the location of the signal from the opposite end represents the form's full length. Both ends of the bar, rod or forging shall be scanned 100 percent with an overlap of at least 25 percent. Additionally, caution must be used to ensure that only the reflected longitudinal wave signal is used for evaluation as opposed to the mode converted signals which trail the primary longitudinal wave signal.

4.4.3.3.2.1.1 The ultrasonic inspection shall be qualified by demonstrating the ability to reject (see 4.4.3.3.4.1.1) a maximum one inch diameter flat bottomed hole machined in an acoustically similar bar, rod or forging with the same or greater diameter as the item to be inspected at a test metal distance at least as long as the item to be inspected.

4.4.3.3.2.2 Shear wave pitch-catch scan. Inspection shall be performed with two scans, 90 degrees apart, along the length of the bar, rod or forging. For hexagonal bar, three scans are required. The scans shall be directed so that the sound beam passes through the center of the form. The pitch-catch technique illustrated in figure 2 shall be used. The maximum dimension of the transducer active element shall not exceed 1 inch. The nominal transducer frequency shall be a minimum of 1 MHz. The pitch (sending) transducer and the catch (receiving) transducer shall be from the same manufacturer and of the same type, size, and frequency. The sound beam angle shall be as shown on figure 2 (plus or minus 2 degrees). The 41 degree transducers may be used for the end scan procedure, still using the specified 1/4 inch grid lines if their use results in an acceptable signal presentation (the 41 degree transducers typically provide enough 45 degree sound energy to perform the required inspections).

4.4.3.3.2.2.1 Center scan. The catch transducer shall be placed in position R1 or R2 (see figure 2) for the center scan depending on the ease of fixturing and the ability to penetrate highly attenuative material. The transducers for the center scan shall be fixtured and locked in position during scanning. The fixture shall be adjustable to compensate for different sizes and to peak the signal during initial set up. With the transducers aligned and locked into place, the transmitted signal shall be set between 80 and 90 percent full screen height. The transducers shall be scanned along the entire length of the bar, rod or forging. Changes in material attenuation will be shown by gradual change in signal amplitude and will occur gradually along the length of the form - either highest or lowest in the center and gradually increasing or decreasing as the fixture is scanned toward the bar ends. Gradual changes in signal amplitude shall be compensated for with the instrument gain control to maintain 50 to 90 percent signal along the entire length of the bar, rod or forging.

4.4.3.3.2.2.2 End scan. The end of the bar, rod or forging shall be scanned with a similar technique. For end scans, fixturing is not practical and an indexing system shall be used to track transducer positions. As illustrated in figure 3, the end of the form shall be marked at 1/4 inch increments across the diameter. One side of the form shall be similarly marked in 1/4 inch increments for a length of one diameter. The transducers are initially placed nose to nose at the corner of the form and an 80 to 90 percent full screen height signal is obtained. The transducers shall then be indexed one mark at a time simultaneously and the signal is read for each index position. It is mandatory to hold the transducers at their index positions and then read the signal - do not peak the signal for the maximim

signal amplitude. Changes in attenuation due to the changing sound path and changes in material attenuation will be shown by a gradual change in signal amplitude while the transducers are indexed. Gradual changes in signal amplitude shall be compensated for with the instrument gain control to maintain a 50 to 90 percent signal along the entire scan length.

4.4.3.3.3 Procedure for other ultrasonic inspections. The following paragraphs describe the requirements for ultrasonic inspection of rod, bar, ring, hollow round products, disc and pancake forgings and plate. Sheet, strip, and wire are specifically excluded form these requirements. Unless otherwise specified below, inspection shall be in accordance with MIL-STD-271.

(a) Ring and hollow round products. In addition to the circumferential scan required by MIL-STD-271, products shall be inspected with a longitudinal wave test in the radial and axial directions.

(b) Plate. Calibration shall be performed on a flat bottomed hole in lieu of the plate back reflection specified in MIL-STD-271. For plate thicknesses up to and including 4 inches, a 1/4 inch diameter hole shall be used. For plate thicknesses greater than 4 inches, a 1/2 inch diameter hole shall be used. The hole shall be drilled inot the test piece or into a separate defect-free specimen of the same size (within plus or minus 1/8 inch), shape, and material (or acoustically similar material). The hole shall be drilled to a depth of one-half the thickness or 1 inch whichever is less. Plate shall be scanned continuously on either a 24 inch grid and one diagonal on each grid, or a 12 inch grid.

4.4.3.3.3.1 Reference notch removal. If reference notches or flat bottomed holes are made in the material to be tested, they shall be so located that their subsequent removal will not impair the suitability of the material for its intended use.

4.4.3.3.4 Acceptance criteria.

4.4.3.3.4.1 For ultrasonic inspection for large size bars, rods and forgings.

4.4.3.3.4.1.1 Longitudinal end scan. A 90 percent or greater loss of back reflection signal (except when the transducer is within one transducer diameter of the side of the bar) or any discontinuity signal greater than 25 percent of the established reference level shall be cause for rejection.

4.4.3.3.4.1.2 Shear wave pitch-catch scan. Abrupt reductions in signal amplitude (6 dB or more in one inch or less of length) shall be cause for rejection.

4.4.3.3.4.2 For other ultrasonic inspections.

4.4.3.3.4.2.1 Shear wave. Any material which produces indications equal to or larger than the response from the reference notch or higher than the straight line joining the two peak amplitudes shall be rejected.

4.4.3.3.4.2.2 Longitudinal wave. Any material which produces indications equal to or larger than the response from the reference hole, or contains areas which result in a 90 percent or greater loss of back reflection (except when the transducer is within one transducer diameter of the side of the bar) shall be rejected. Material shall be tested using a square, rectangular, or circular transducer having an effective area of 1 square inch or less, but no dimensions shall be smaller than the diameter of the reference hole. In the event of disagreement on the degree of back reflection loss, it shall be determined by the contact method using a 1 to 1 1/8 inch diameter transducer or one whose area falls within this range.

4.4.3.4 Liquid penetrant inspection.

4.4.3.4.1 Procedure. Liquid penetrant inspection shall be in accordance with MIL-STD-271.

4.4.3.4.2 Surface requirements. The surface produced by hot working is not suitable for liquid penetrant testing. Therefore, liquid penetrant testing will not be applicable to products ordered with a hot finished surface.

4.4.3.4.3 Acceptance criteria. Linear defects revealed by liquid penetrant inspection shall be explored by grinding or other suitable means. Depth of defects shall not exceed the dimensional tolerance of the material.

4.4.3.5 Grain size procedure. The sample selected for grain size determination shall be macroetched to reveal grain structure. The sample shall be prepared so that the surface to be etched has a suitable finish for macroetching and be etched according to ASTM E340. Two locations shall be selected to be evaluated as follows: One grain size specimen shall be selected from the coarsest grain area of the macroetched surface established by visual examination (unaided visual or low power - up to 10X magnification). The other specimen shall be selected from the finest grained area of the macroetched surface. The selected grain size specimen shall be prepared and inspected in accordance with ASTM E112. The inspected surface of the specimen shall be perpendicular to the major direction of working.

4.4.4 Replacement, Retest, Rejection and Resubmittal.

4.4.4.1 Mechanical property retests.

4.4.4.1.1 If any test speciment shows defective machining or develops flaws which cause inaccurate test results it may be discarded and a replacement test specimen substituted.

4.4.4.1.2 If the percentage of elongation of any tension test specimen is less than that specified and any part of the fracture is outside of the iddle two-thirds of the gage length or in a punched or scribed mark within the reduced section, a retest shall be allowed.

4.4.4.1.3 If the test results of the test on one of the specimens fails to meet the specified requirements two additional specimens shall be taken (one from the same piece as the failed specimen and one form a different sample piece) as tested. The results of the tests on both of these specimens shall meet the specified requirements.

4.4.4.2 Rejection. When any test specimen does not conform to specification requirements for the characterists being tested or more than one specimen of the original sample fails to meet the specified requirements for a particular property the lot represented by the specimen shall be rejected.

5. PREPARATION FOR DELIVERY

5.1 Preservation and packaging, packing, and marking. Material as specified (see 6.2), shall be preserved/packaged, packed level A or C, and marked as specified (see 6.2), in accordance with MIL-STD-163.

6. NOTES

(This section contains information of a general or explantory nature that may be helpful, but is not mandatory).

6.1 Intended use.

6.1.1 Nickel-copper-aluminum alloy, UNS N05500 is used where a combination of high strength and resistance to corrosion are involved. For optimum tool life the annealed condition is recommended. Cold drawn material is intended for automatic machining operations.

6.1.2 Nickel-copper-aluminum alloy sheet and strip in the annealed condition may be used in the manufacture of articles in which heading, bending, curling, drawing, forming, lock-seaming, welding, etc., operations are involved.

6.1.3 Cold rolled strip of half hard and full hard temper are used where light deformations or liberal bending radii are involved, for applications such as springs.

6.1.4 Nickel-copper-aluminum alloy wire in the annealed condition is intended for severe forming, cold heading, and roll threading operations.

6.1.5 Nickel-copper-aluminum alloy wire, spring temper in the as drawn condition is intended for coiling of helical springs which are to be aged hardened after coiling in order to obtain maximum strength and hardness. Where helical springs are to be cold pressed, the cold pressing is to be done

after coiling and aging.

6.2 Acquisition requirements. Acquisition documents must specify the following:

(a) Title, number, and date of this specification.
(b) Form, condition, and surface finish of material required (see 1.2.1 and 1.2.2).
(c) Whether a forging sketch is required (see 3.2.1).
(d) Size required (see applicable table).
(e) If a product check analysis is required (see 3.3.)
(f) When hardness measurements may be utilized for forged rings and discs (see footnote 4 of table III.)
(g) When tolerances other than those specified are permitted (see footnote 2 of table VII; footnote 6 of table XV; footnote 5 of table XVII and footnote 2 of table XVIII).
(h) If optional ultrasonic inspection is required (see 3.5.3).
(i) If optional liquid penetrant inspection is required (see 3.5.4).
(j) The lengths required and whether cut-to-length, random mill lengths, nominal (stock) lengths, or multiples of specified lengths (see 3.7.1.3.1, 3.7.3.3.1 and 3.7.3.3.2.1).
(k) If edges are other than specified (see 3.7.1.4 and 3.7.3.4.1, 3.7.3.4.2, and 3.7.3.4.3).
(l) Forging dimensions (see 3.7.2).
(m) When plate is required without sheared edges, or without machined, abrasive, or plasma torch cut edges (see 3.7.3.3.3.1).
(n) Weight of coil or spool of wire required (see 3.7.4.3).
(o) If marking should be other than specified (see 3.8).
(p) Grain size data not required or required for acceptance (see 3.10).
(q) If a lot for visual and grain size inspections and mechanical tests is other than specified (see 4.4.1.1.1).
(r) When mechanical tests are required for rod and bar intended for reforging (see 4.4.3.2.1.3).
(s) Selection of applicable levels of packaging, packing, and marking required, if other than specified (see 5.1).

6.3 First article. When first article inspection is required the contracting officer should provide specific guidance to offerors whether the item should be a preproduction sample, a first article sample, a sample selected from first production items or a standard production item from the contractors current inventory (see 3.1.1), and the number of items to be tested as specified in 4.3.1. The contracting officer should also include specific instructions on acquisition documents regarding arrangments for examinations, approval of first article test results, and disposition of first articles. Invitations for bids should provide that the Government reserves the right to waive the requirement for samples for first article inspection to whose bidders offering a product which has been previously acquired or tested by the Government, and that such bidders offering such products, who wish to

Government approval is presently appropriate for the pending contract. Bidders should not submit alternate bids unless specifically requested to do so in the solicitation.

6.3.1 Heats required. The offeror should not be excused from first article inspection until five heats of material have been examined and determined acceptable.

6.4 Reinspection of rejected lots.

6.4.1 Rejected lots. A rejected lot may be resubmitted for acceptance testing only after rework, as necessary, is performed to correct the noncoforming condition without adversely affecting the conforming properties. If the rejected lot is re-heat treated to correct a nonconforming characteristic, all mechanical properties, including those which were initially conforming, should be determined.

6.4.2 Individual pieces. When a rejected lot consists of more than one piece, each remaining piece in the lot may be resubmitted for testing for the nonconforming characteristic and each piece that conforms to all specification requirements may be considered for acceptance.

6.5 Alternate ultrasonic inspection procedure. Consideration may be given to alternate ultrasonic inspection procedures. These procedures must be approved by the Command or agency concerned.

6.6 General information (material availability)

6.6.1 Age hardened material is supplied with thin, dark oxide finish in all forms, excepting bright finished cold drawn shafting and smooth machined rounds.

6.6.2 Bright finish, cold drawn and age hardened shafting is available in round rods for shafting. The bright finish consists of grinding or polishing to remove the light oxide film resulting from the age hardening treatment.

6.6.3 Hot finished round rod with a cold drawn pass is available to close tolerances for hot upsetting of bolts. The tolerances are such as to meet the requirements of class 3A of American Standard screw thread.

6.6.4 Annealed sheet and strip is furnished with a plain finish resulting from descaling or annealing in an atmosphere that yields a bright finish.

6.6.5 Half and full hard strip is furnished with a surface varying from bright to slight oxide discoloration.

6.6.6 When ordering hot finished material, allowances should be made as

listed in table XXIII to allow for clean-up to the users finished cross-sectional dimensions.

6.7 Hot working cautions.

6.7.1 Material should not be cooled slowly following hot working operations. Slow cooling will result in self hardening as cooling takes place through the precipitation hardening range. Generally, sections 3/4 inch thick and smaller will air cool or can be cooled with an air blast rapidly enough to prevent self hardening, provided the parts are not piled one on top or against each other. Sections over 3/4 inch are normally water quenched.

6.7.2 Should a forging operation on this material be interrupted to the extent that the heated bars are likely to cool below 1450F, the bars should be quenched rather than be permitted to air cool below that temperature.

6.7.3 With reference to the heating times shown herein, care must be taken to obtain the proper temperature throughout the cross-section on large diameters or thicknesses. Also it should be understood that material should be brought to annealing temperature or hot working temperature as rapidly as possible to avoid aging of the material on the way up to temperature, otherwise cracking or thermal splitting of the material might occur, particularly in subsequent hot working operations.

6.8 This specification covers various stock forms of nickel-copper-aluminum alloy for the fabrication of finished components. Component specifications should be consulted for the requirements relevant to individual products.

6.9 Subject term (key word) listing.

Rods
Bars
Forgings
Ultrasonic

6.10 Changes from previous issue. Marginal notations are not used in this revision to identify changes with respect to the previous issue, due to the extensiveness of the changes.

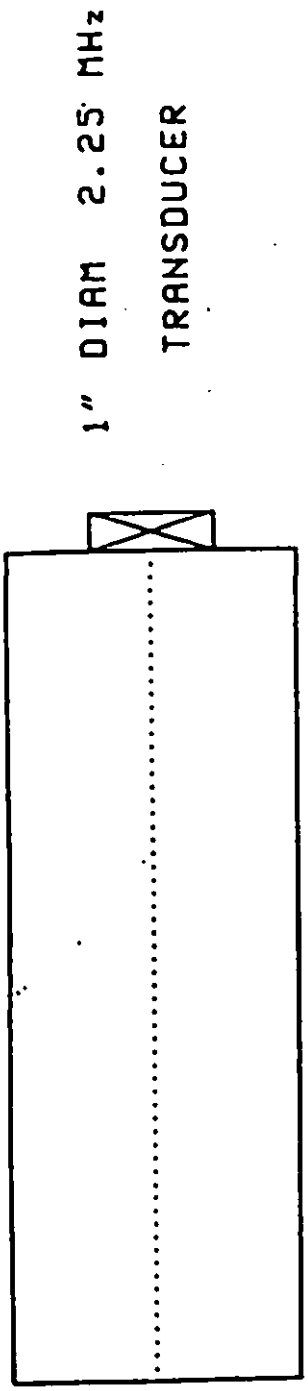

FIGURE 1. Longitudinal end scan inspection technique for large bar, rod and forgings.

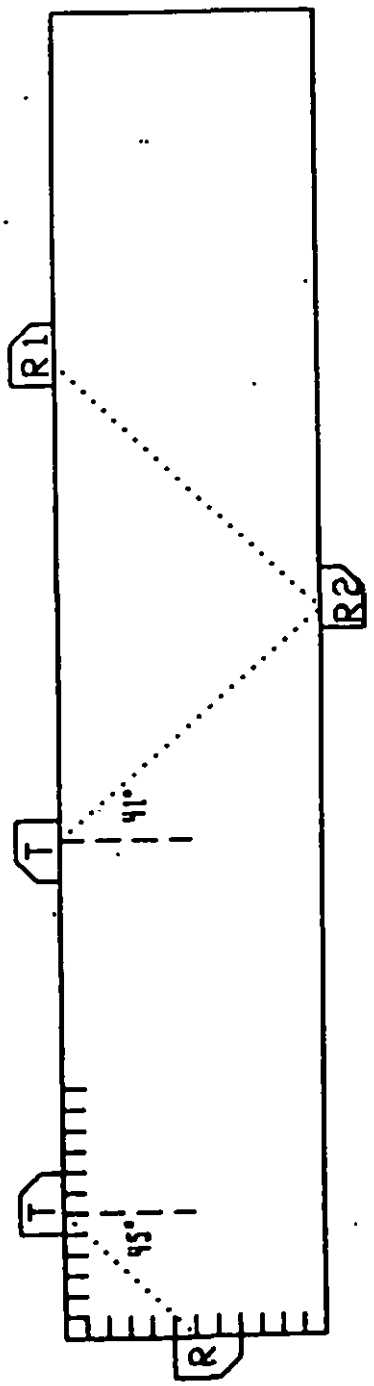

FIGURE 2. Shear wave pitch-catch inspection technique for large bar, rod and forgings.

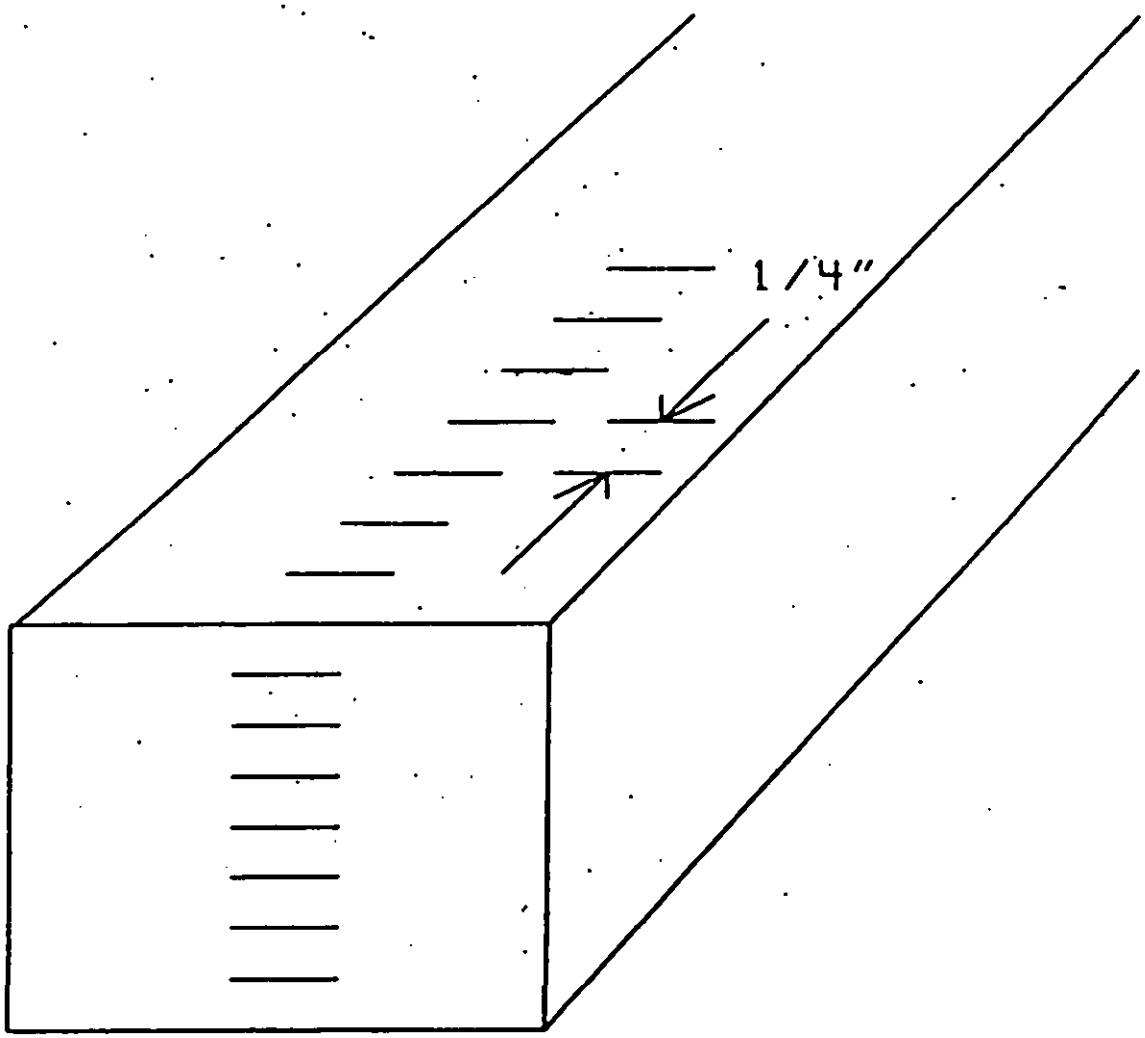

FIGURE 3. Index marking layout for shear wave pitch-catch end scan of large bar, rod and forgings.