Downloaded from http://www.everyspec.com

NN-P-71C
September 10, 1973
SUPERSEDING
Fed. Spec. NN-P-71B
April 26, 1966,
MIL-P-3938B
4 May 1960, and
MIL-P-22562A(MC)
29 May 1968

FEDERAL SPECIFICATION

PALLETS, MATERIAL HANDLING, WOOD, STRINGER CONSTRUCTION, 2-WAY AND 4-WAY (PARTIAL)

This specification was approved by the Commissioner, Federal Supply Service, General Services Administration, for the use of all Federal Agencies.

1. SCOPE

1.1 This specification covers the design, materials, and fabrication of various sizes and styles of wood pallets for general storage and materials handling.

1.2 Classification. Pallets covered by this specification shall be of the following types, classes, styles, sizes, groups, and grades as specified (see 6.2):

Type I - Two-way, flush (see figure 1).

Class 1 - Assembled.

Class 2 - Unassembled (knockdown).

Style A - Nonreversible.

Length and Width (inches):

Size 1 - 32 by 40.

Size 2 - 40 by 48.

Downloaded from http://www.everyspec.com

Size 3 - 48 by 48.

Size 4 - 48 by 60.

Style B - Reversible.

Length and Width (inches):

Size 1 - 32 by 40.

Size 2 - 40 by 48.

Size 3 - 48 by 48.

Type II - Two-way, wing, assembled, nonreversible (see figure 2).

Length and Width (inches):

Size 1 - 32 by 40.

Size 2 - 40 by 48.

Size 3 - 48 by 48.

Type III - Four-way (partial), flush, assembled, nonreversible (see figure 3).

Length and Width (inches):

Size 2 - 40 by 48.

Type IV - Four-way, partial, wing, assembled, nonreversible, single use, 40 x 48 (see figure 6 and 7).

Type V - Four-way partial, wing, nonreversible (see figures 6, 7 and 8).

Class 1 - Assembled.

Class 2 - Unassembled.

Downloaded from http://www.everyspec.com

Length and Width (inches)

Size 1 - 32 by 40.

Size 2 - 40 by 48.

Type VI - Two-way, flush, assembled, 60 x 60 (for tire storage) (see figures 9 and 10).

Group I - Low density woods (softwoods and hardwoods).

Group II - Medium density woods (softwoods).

Group III - High density woods (hardwoods).

Group IV - Very high density woods (hardwoods).

Grade A - Untreated.

Grade B - Treated.

2. APPLICABLE DOCUMENTS

2.1 The following documents, of the issues in effect on date of invitation for bids or request for proposal, form a part of this specification to the extent specified herein:

Downloaded from http://www.everyspec.com

Federal Specifications:

FF-N-105	- Nails, Brads, Staples and Spikes: Wire, Cut and Wrought.
QQ-S-781	- Strapping, Steel, Flat and Seals.
TT-W-572	- Wood-Preservative; Water-Repellent.
PPP-B-636	- Boxes, Shipping, Fiberboard.

Federal Standards:

FED. STD. No. 123	- Marking for Domestic Shipment (Civil Agencies).

(Activities outside the Federal Government may obtain copies of Federal Specifications, Standards, and Handbooks as outlined under General Information in the Index of Federal Specifications and Standards and at the prices indicated in the Index. The Index, which includes cumulative monthly supplements as issued, is for sale on a subscription basis by the Superintendent of Documents, U.S. Government Printing Office, Washington, DC 20402.

(Single copies of this specification and other Federal Specifications required by activities outside the Federal Government for bidding purposes are available without charge from Business Service Centers at the General Services Administration Regional Offices in Boston, New York, Washington, DC, Atlanta, Chicago, Kansas City, MO, Fort Worth, Denver, San Francisco, Los Angeles, and Seattle, WA.

(Federal Government activities may obtain copies of Federal Specifications, Standards, and Handbooks and the Index of Federal Specifications and Standards from established distribution points in their agencies.)

Military Standards:

MIL-STD-105	- Sampling Procedures and Tables for Inspection by Attributes.
MIL-STD-129	- Marking for Shipment and Storage.
MIL-STD-731	- Quality of Wood Members for Containers and Pallets.
MIL-STD-1363	- Measurement of Wood Moisture Content.

Downloaded from http://www.everyspec.com

(Copies of standards required by suppliers in connection with specific procurement functions should be obtained from the procuring activity or as directed by the contracting officer.)

2.2 Other publications. The following documents form a part of this specification to the extent specified herein. Unless otherwise indicated, the issue in effect on date of invitation for bids or request for proposal shall apply.

Uniform Classification Committee, Agent:

Uniform Freight Classification

(Application for copies should be addresses to the Uniform Classification Committee, ATTN: Tariff Publishing Officer, Room 1106. 222 South Riverside Plaza, Chicago, IL 60606.)

National Motor Freight Traffic Association Inc., Agent:

National Motor Freight Classification

(Application for copies should be addressed to the American Trucking Associations, Inc., ATTN: Tariff Order Section 1616 P Street, NW, Washington, DC 20036.)

National Wooden Pallet and Container Association:

Specifications and Grades for Warehouse, Permanent or Returnable Pallets of West Coast Woods.

(Application for copies should be addressed to the National Wooden Pallet and Container Association, 1619 Massachusetts Avenue, NW, Washington, DC 20036.)

American Society for Testing and Materials (ASTM) Standard:

E 18 67 - Rockwell hardness and Rockwell Hardness of Metallic Materials
E 290 68 - Semi-Guided Bend Test for Ductility of Metallic Materials

(Application for copies should be addressed to the American Society for Testing and Materials, 1916 Race Street, Philadelphia, PA 19103.)

3. REQUIREMENTS

3.1 Description. Stringer pallets covered by this specification are of six different types: Two-way flush, two-way wing, four-way (partial) flush, four-way wing for single use, four-way (partial) wing, and two-way flush for tire storage. Some of the pallets are available either assembled or disassembled, the latter to provide economical shipment. As many as five different sizes are covered in both low density and high density woods.

Downloaded from http://www.everyspec.com

3.2 First article (preproduction model). When specified (see 6.2), the supplier shall furnish one or more pallets for examination and testing within the time frame specified (see 6.2), to prove prior to starting production, that his production methods will produce pallets that comply with the requirements of this specification. Examination and tests shall be as specified in section 4 and shall be subject to surveillance and approval by the Government (see 6.3).

3.3 Materials.

3.3.1 Wood. All wood shall be of any of the species, or combination thereof within a group, listed in MIL-STD-731. Quality of wood shall conform to class 2 structural classification of MIL-STD-731 with the following exceptions or additions. Moisture content of pallet components shall be in accordance with 3.3.1.1. Type VI pallets shall be fabricated of group III or IV woods; other pallet types shall be of the wood group specified (see 6.2).

(a) Pith shall be firm and tight.
(b) White speck shall not be permitted except in type IV pallets for which the following applies. White speck shall not be permitted in stringers or edge deckboards. White speck may be in all other deckboards, but shall be limited in severity to scattered rather than honeycombed. Scattered white speck is characterized by the holes or pockets being filled with white cellulose material rather than the empty holes of areas considered as honeycomb.
(c) Insect infestation, as evidenced by fresh dust piles, shall not be permitted.
(d) Torn grain shall not exceed 1/16 inch in depth and shall not constitute in aggregate over 1/6 the surface of the individual piece.
(e) Deckboards and stringers for type IV pallets shall conform to the commercial grade and quality grade respectively as contained in Specifications and Grades for Warehouse, Permanent or Returnable Pallets of West Coast Woods except for the preceding requirements which constitute exceptions when applicable.

3.3.1.1 Moisture content. Unless otherwise specified (see 6.2), the moisture content of class 1 pallet components, except those for type IV pallets, shall be as follows at time of fabrication:

Deckboards - average of 19 percent with no single piece over 22 percent.
Group III and IV woods over 1 inch thick shall not exceed 26 percent.
Stringers - not over 26 percent except for type VI pallets which shall have no restriction.

Downloaded from http://www.everyspec.com

Class 2 pallet components shall have the same moisture content as specified for class 1. Type IV pallets shall have no restriction on the moisture content. Components of preserved pallets shall be seasoned according to the above requirements prior to preservative treatment. Moisture content shall be determined as specified in 4.5.2.3.

3.3.2 Nails. Nails shall conform to FF-N-105, type II, style 18. The helical thread shall have a minimum of four flutes. Nails for pallets fabricated of groups 1 and 2 woods (softwoods) shall be 2-1/4 inches long by 0.120 inches in diameter. Nails for pallets fabricated of groups 3 and 4 woods (hardwoods) shall be 2-1/2 inches long by 0.120 inches in diameter. As an alternate fastener, a hardened steel nail having the following characteristics is acceptable:

Length: 2-1/4 inches plus or minus 1/16 inch.
Wire Diameter: 0.110 inch plus or minus 0.002 inch.
Head: 1/4 inch diameter plus or minus 5 percent.
Hardness: Rockwell C42 minimum.
Point: Diamond or chisel point 5/32 inch long plus or minus 1/16 inch.
Pitch diameter: 0.138 inch plus or minus .005 inch.
Thread: Helical, minimum of four flutes, forming an angle of 60 degrees plus or minus 5 degrees with a plane perpendicular to the axis. Threads shall extend from the point up to at least 2/3 of the shank length.

The alternate hardened nails shall be ductile enough to bend 90 degrees over a mandrel the same diameter as the nail without fracture. Ductility of nails shall be determined in accordance with 4.5.2.2. Hardness of the nails shall be determined in accordance with 4.5.2.1.

3.4 Design and construction. Design and construction of class 1 pallets shall be in accordance with the requirements specified herein. Except for final assembly, class 2 pallets shall conform to the same requirements. Figures 1, 2, and 3 contained herein are for the convenience of identificaton and are not intended to preclude the purchase of pallets which are otherwise in accordance with the requirements of this specification. Figures 4 through 10 show detail requirements for the various types of pallets covered herein.

3.4.1 Tolerances and positioning of components. A plus or minus tolerance of 1/4 inch will be permitted on the overall length and width of the assembled pallet. The deckboards and stringers of any one pallet shall be uniform in thickness and width, with a tolerance of 1/16 inch over the

Downloaded from http://www.everyspec.com

minimum sizes specified in 3.4.2. Stringers shall not protrude on any side and shall be cut square on the ends. Assembled pallets shall have an out-of-square deviation not to exceed 3/8 inch (3/4 inch difference in diagonals). Intermediate deckboards shall be parallel with the edges and with each other.

3.4.2 Details of components.

3.4.2.1 Stringers. Stringers except for type VI pallets, shall be nominal 2 x 4 inches, surfaced or smooth sawn on both top and bottom surfaces. Stringers shall have minimum uniform width of 3-1/2 inches and a uniform thickness of 1-1/2 inches. The difference in width between the two ends of stringers shall not exceed 1/16 of an inch. The outside stringers shall be surfaced or smooth sawn on the outside face, in addition to the top and bottom. Outside stringers for type VI pallets shall be nominal 3 x 4 inches; center stringer shall be nominal 2 x 4 inches with minimum sizes as shown in figure 9.

3.4.2.1.1 Number and spacing of stringers. Types I and II pallets in the various widths, type IV pallets, and type V, size 1 pallets shall have the number of stringers as specified below. Stringers shall be spaced uniformly, except that the second and fourth stringers on pallets 48 by 60 inches shall be spaced a minimum of 28 inches to a maximum of 30 inches, between their inside surfaces, and located equidistant from the center stringer. Types III and V, size 2 pallets shall have four stringers with the two inside stringers located so that their outside edges are 8 inches apart and equidistant from the outside stringers.

Stringer Requirements (Types I, II, IV and V Size 1)

Width of Pallet (Inches)	Number of Stringers
40	3
48	3
60	5

Types I, III, and VI pallets shall have the outside stringers flush with the ends of the deckboards. Types II, IV, and V pallets shall have the outside stringers located as shown in figures 6 and 8.

Downloaded from http://www.everyspec.com

3.4.2.1.2 Fork notches and strap slots. Types III, IV, and V pallets shall have each stringer notched for fork truck entry. Each stringer shall have two notches 1-1/8 inch minimum to 1-1/4 inch maximum in depth. The bottom of each notch shall be a minimum of 8-1/2 inches and not over 10-1/2 inches in length, except that on type V, size 1 pallets the notch shall be 8-1/2 plus or minus 1/8 inches long. Distance of the center of the notch to the end of the stringer shall be as follows:

Size 1 - 9-1/4 inches plus or minus 1/8 inch
Size 2 - 10-7/8 inches plus or minus 1/8 inch

The top of the notch shall be not less than 7 inches long. Strap slots shall be provided in the upper edge of all stringers for all wing type pallets as shown on figures 7 and 8.

3.4.2.2 Deckboards. Deckboards shall be of a length corresponding to the width of the pallet being fabricated. Deckboards shall be surfaced on one side to a thickness of not less than 11/16 inch. Top deck end and bottom deck entry boards shall be free of wane on their outer edges and shall be mounted flush with the ends of the stringers. Top deck end and bottom deck entry boards shall be not less than 5-1/2 inches wide. Deckboards located over strap slots shall be a minimum of 4-1/2 inches wide to provide adequate nailing space on either side of the slots. The balance of top deckboards shall be random widths with none less than nominal 4 inches nor more than nominal 8 inches. Spacing between top deck boards shall not exceed 1-1/2 inches except that type IV pallets shall have a spacing of 3 inches and type VI pallets shall be as shown in figure 9. On reversible pallets spacing of bottom deckboards shall be the same as for top deckboards. Bottom deckboards shall be of sizes and spaced as indicated on figures 4, 5, 7, 8, and 10 unless otherwise provided for. The upper edges of all bottom deckboards of most non-reversible pallets shall be chamfered. Chamfers shall be 12 inches long and cut at a 45-degree angle to the face to within 1/4 to 3/8 inch of the bottom surface. Chamfers shall be centered within the spaces between stringers. Type IV and VI pallets shall not have chamfers. Deckboards shall be predrilled if necessary to prevent splitting during assembly, especially group III and IV woods. Deckboards of all unassembled pallets of group III and IV woods shall be predrilled. A 5/64 inch (0.078) diameter drill shall be used for predrilling. Figures 6 and 7 depict the type IV pallet, except for deckboard spacing and chamfering of lower deckboards which shall be as specified herein.

Downloaded from http://www.everyspec.com

3.5 Fabrication of pallets.

3.5.1 Nailing. Nailing of top and bottom deckboards to stringers shall have the following number of nails at each intersection: Deckboards to 5-1/2 inches wide, two nails; deckboards 5-1/2 to 7-1/2 inches wide, three nails; deckboards over 7-1/2 inches wide, four nails. All nails shall be staggered to prevent wood splitting. End nails shall be driven not less than 3/4 inch from the end edges of the deckboards. Edge nails shall be driven not less than 1 inch from the side edges of the deckboards, with the remaining nails uniformly spaced between them. The heads of all nails shall be driven beneath the surface of the wood. No nails shall be driven through the strap slots. In each deckboard over a strap slot, a minimum of one nail shall be used on either side of the slot. All nails bent in driving shall be removed or broken off below the wood surface and replaced.

3.5.2 Assembly of class 2 pallets. Class 2 pallets shall be capable of easy and final field assembly without finishing adjustments, using available handtools and the pallet components and hardware supplied. Class 2 pallets shall meet all material and fabrication requirements of this specification. Assembly instructions shall be furnished with each unitized load of class 2 pallets.

3.6 Marking. When specified (see 6.2), each class 1 pallet shall be marked with the letters "U.S." and the manufacturers identification. The "U.S." shall be branded with 1- to 1-1/2-inch-high letters located near the center of the outer face of one of the outside stringers. The manufacturers identification shall be stenciled on the same stringer face in letters 1/4 to 1/2 inch high. Class 2 pallets shall not be so individually marked.

3.7 Wood treatment. Grade B pallets shall be completely immersed in a wood preservative solution, conforming to composition A or B of TT-W-572. The solution shall be maintained within a temperature range of 70° to 100° F. and immersion of pallets shall be for a duration of 5 minutes. Upon withdrawal, pallets shall be allowed to drain thoroughly before shipment. An oil soluble dye shall be added to composition A preservative so as to impart a light to medium green color to preserved pallets or unassembled pallet components. Pallet components to be preserved shall be dried, prior to preservation, to the moisture content specified in 3.3.1.1 to permit greater take-up of the wood preservative. Pallet components shall be completely cut to the size desired prior to preservation; no cutting is permitted after preservative treatment.

Downloaded from http://www.everyspec.com

3.8 Workmanship. Except for permissable defects, assembled pallets shall be clean and assembled properly. Surfaces shall be smooth and free from slivers or damage. Nail heads or points shall not protrude from deckboards or sides of stringers. In addition to the foregoing, unassembled pallets shall be free of defects which would affect proper and easy field assembly.

4. QUALITY ASSURANCE PROVISIONS

4.1 Responsibility for inspection. Unless otherwise specified in the contract or purchase order, the supplier is responsible for the performance of all inspection requirements as specified herein. Except as otherwise specified in the contract or order, the supplier may use his own or any other facilities suitable for the performance of the inspection requirements specified herein, unless disapproved by the Government. The Government reserves the right to perform any of the inspections set forth in the specification where such inspections are deemed necessary to assure that supplies and services conform to prescribed requirements.

4.1.1 Component and material inspection. The supplier is reponsible for insuring that components and materials used are manufactured, examined, and tested in accordance with referenced specifications and standards, and the requirements specified herein.

4.2 Classification of inspection. Inspection shall be classified as follows:

(a) Preproduction model inspection (see 4.3).
(b) Quality conformance inspection (see 4.4).
(c) Inspection of preparation for delivery (see 4.6).

4.3 Preproduction model inspection.

4.3.1 Examination. The pallet shall be examined for the defects specified in 4.5.1. Presence of one or more defects shall be cause for rejection.

4.3.2 Test. The pallet shall be tested in accordance with 4.4.4.2. Failure of any test shall be cause for rejection.

Downloaded from http://www.everyspec.com

4.4 Quality conformance inspection.

4.4.1 Sampling. Sampling for examination and test shall be in accordance with MIL-STD-105, inspection levels and AQL's as specified herein.

4.4.2 Lot. For pallets, a lot shall be all those of the same type, class, style, size, group and grade offered for delivery at one time. For nails, the lot shall be all those on hand which are intended to be used in fabrication of the pallets under contract.

4.4.3 Inspection of nails. Prior to starting production, the supplier shall provide assurance that nails proposed for use in pallet fabrication comply with the requirements specified herein. In the absence of certification from the nail supplier, the pallet supplier shall perform or have performed the inspection necessary to assure conformance. If the nails are acceptable no further inspection need be performed if the supplier continues to use the same type by the same manufacturer as originally accepted.

4.4.3.1 Examination. Nails selected in accordance with 4.4.1 shall be examined for the defects specified in 4.5.1. A double sampling plan shall be used with an AQL of 2.5 percent defective and an inspection level of S-4. Samples shall be chosen randomly, some from each box of nails on hand.

4.4.3.2 Tests. Nails selected in accordance with 4.4.1 shall be tested as specified in 4.5.2.1 and 4.5.2.2. A double sampling plan shall be used with an AQL of 2.5 percent defective and an inspection level of S-4. The samples chosen for 4.4.3.1 may be used for 4.4.3.2.

4.4.4 Pallets. For examination and test purposes, a sample unit shall be a completely assembled pallet, or in the case of class 2 pallets all the components necessary to assemble one pallet.

4.4.4.1 Examination. Samples selected in accordance with 4.4.1 shall be examined for the defects listed in table I. The AQL for major defects shall be 4.0 and for total defects shall be 6.5, expressed in terms of defects per hundred units.

Downloaded from http://www.everyspec.com

4.4.4.2 Tests. Samples selected in accordance with 4.4.1 shall be tested in accordance with 4.5.2.3. The AQL for the moisture content test shall be 4.0 defects per hundred units with an inspection level of S-4. The assembly test in 4.5.2.4 shall be performed on two of the samples selected in 4.4.1. Inability to assemble the pallet as specified in 4.5.2.4 shall cause rejection of the lot. The lot may be accepted after complete screening and replacement of defective components; the original test criteria must then be applied before lot acceptance.

4.5 Inspection procedure.

4.5.1 Examination. Nails and completed pallets shall be examined as specified herein for the following defects:

Table I. Classification of Defects

Examine		Defect	Classification Major	Minor
Nails	101.	Improper length.	X	-
	102.	Incorrect diameter	X	-
	103.	Incorrect thread angle or number of flutes.	X	-
	104.	Improper point.	X	-
	105.	Improper head diameter	X	-
Wood components	106.	Wood of less dense group than specified used.	X	-
	107.	Wood components not in accordance with requirements of MIL-STD-731 with exceptions for all pallets except type IV.	X	-
	108.	Wood components for type IV pallets not in accordance with NWPCA specification and exceptions thereto.	X	-
Assembled pallets	109.	Pallets of improper type, style, or size.	X	-
	110.	Stringers not cut square on end or protruding beyond deckboards.	-	X
	111.	Pallet not square within specified tolerances.	X	-

Downloaded from http://www.everyspec.com

Table I. Classification of Defects (Continued)

Examine		Defects	Classification Major	Minor
Assembled pallets	112.	Deckboards not spaced as specified.	X	-
	113.	Stringers not of number or spacing specified.	X	-
	114.	Deckboards of width less than minimum specified.	X	-
	115.	Bottom deckboards not chamfered as specified.	-	X
	116.	Stringers not slotted for straps as specified.	X	-
	117.	Fork notches not as specified.	X	-
	118.	Deckboards and stringers not surfaced or smooth sawn as specified.	-	X
	119.	Stringers and deckboards not secured together with the number of nails specified.	X	-
	120.	Nails not staggered as specified.	X	-
	121.	Nails not completely driven or points protruding.	X	-
	122.	Marking with "U.S." and manufacturers symbol not as specified.	-	X
	123.	Pallets not treated with wood preservative as specified.	X	-
Unassembled pallets (In addition to above appl. defects.)	124.	Insufficient components included to assemble pallet.	X	-
	125.	Assembly instructions not included.	X	-
	126.	Hardwood (group III and IV wood) deckboards not predrilled as specified.	X	-

Downloaded from http://www.everyspec.com

4.5.2 Tests.

4.5.2.1 Nail hardness. Tests for hardness of nails shall be performed in accordance with the applicable portions of ASTM E18. Hardness shall be a minimum of Rockwell C42.

4.5.2.2 Nail ductility. Samples shall be bent 90 degrees over a mandrel the diameter of the nail. Evidence of nail fracture shall constitute failure of the test. The test shall be done in accordance with ASTM E290.

4.5.2.3 Moisture content. Moisture content shall be determined using the electric-moisture meter method of MIL-STD-1363. A minimum of five readings shall be taken at random locations on each sample pallet. The average value of the five readings shall meet the requirements of 3.3.1.1.

4.5.2.4 Assembly test. The pallet shall be completely assembled to insure achievement of a pallet which is square, is of the proper size, and meets the workmanship requirements of 3.8. Clarity of the assembly instructions shall also be determined.

4.6 Inspection of preparation for delivery.

4.6.1 Quality conformance inspection.

4.6.1.1 Unit of product. For inspection purposes a completed pack of either assembled or unassembled pallets shall be considered the unit of product.

4.6.1.2 Sampling. Sampling for examination shall be in accordance with MIL-STD-105 from a lot offered for delivery at one time.

4.6.1.3 Examination. Samples selected in accordance with 4.6.1.2 shall be examined for the following defects. AQL shall be 2.5 percent defective.

127. Nails not packaged as specified.
128. Quantity of assembled pallets in bundle other than specified.
129. Pallets not bundled and strapped when specified.
130. Unassembled pallets not packed as specified.
131. Nails not included in pack of unassembled pallets.
132. Marking incorrect, missing, or illegible.

Downloaded from http://www.everyspec.com

5. PREPARATION FOR DELIVERY

5.1 Preservation and packaging. Nails, of a quantity to assemble 18 class 2 pallets, shall be packaged in boxes conforming to PPP-B-636, type CF or SF, grades W6c or W6s. The boxes shall have a height no greater than that of a pallet stringer. The boxes shall be closed in accordance with the box specification.

5.2 Packing.

5.2.1 Assembled pallets. Assembled pallets shall be shipped loose in a manner to assure lowest rates and complying with Uniform Freight Classification rules or National Motor Freight Classification rules. When specified (see 6.2) for military shipments, pallets shall be packed in bundles secured with a single steel strap conforming to QQ-S-781, type I or IV, finish optional, 3/4 by 0.031 or 0.035 inch. The strap shall pass through the bottom pallet adjacent to or between the center stringer(s), encircle the load, and pass through the top pallet as on the bottom pallet. Type I, size 4, and type VI pallets shall be secured with two straps, one placed adjacent to each of the outside stringers. Bundles shall not exceed 41 inches in overall height.

5.2.2 Unassembled pallets. Twenty unassembled pallets shall be packed as shown on figure 11. Packaged nails for each bundle shall be placed within a void space created among the stringers or the deckboards.

5.3 Marking.

5.3.1 Civil agencies. Marking for shipment shall be in accordance with FED. STD. No. 123.

5.3.2 Military agencies. Marking for shipment and storage shall be in accordance with MIL-STD-129.

6. NOTES

6.1 Intended use. Pallets covered by this specification are intended for use with forklift and handlift trucks for general materials handling operations in storage and distribution systems. Pallets may be loaded wherever materials enter a supply system for storage and shipment. Preservative treated pallets may be used for storage in both covered and open areas.

Downloaded from http://www.everyspec.com

6.2 Ordering data. Purchasers should select the preferred options permitted herein and include the following information in the procurement documents.

(a) Title, number, and date of this specification.
(b) Type, class, style, size, wood group, and grade of pallets (see 1.2 and 3.3.1).
(c) Time frame required for submission of preproduction model, when specified (see 3.2).
(d) Moisture content if other than specified (see 3.3.1.1).
(e) If pallets are to be marked with "U.S." and the manufacturers identification (see 3.6).
(f) If pallets are to be bundled for shipment (see 5.2.1).

6.3 Preproduction model. Any changes or deviations of production pallets from the approved preproduction model during production will be subject to the approval of the contracting officer. Approval of the preproduction model will not relieve the supplier of his obligation to furnish pallets conforming to this specification.

6.4 Packaging levels. For military procurements, packaging and packing levels do not apply as the nature of the described pallets is such that only one method of packaging and packing is reasonable.

Downloaded from http://www.everyspec.com

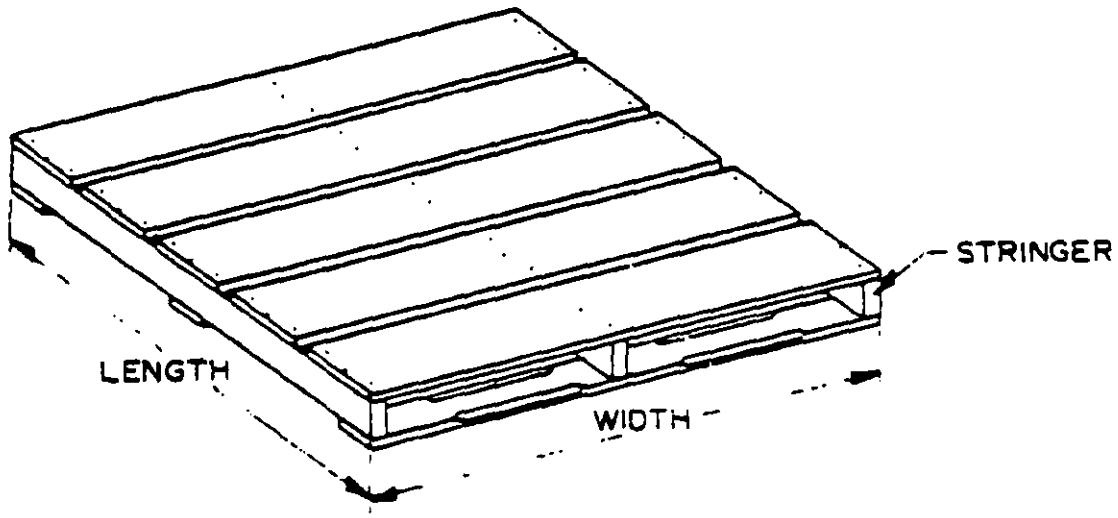

FIGURE 1. TYPE I, TWO-WAY FLUSH PALLET.
X-2413

Downloaded from http://www.everyspec.com

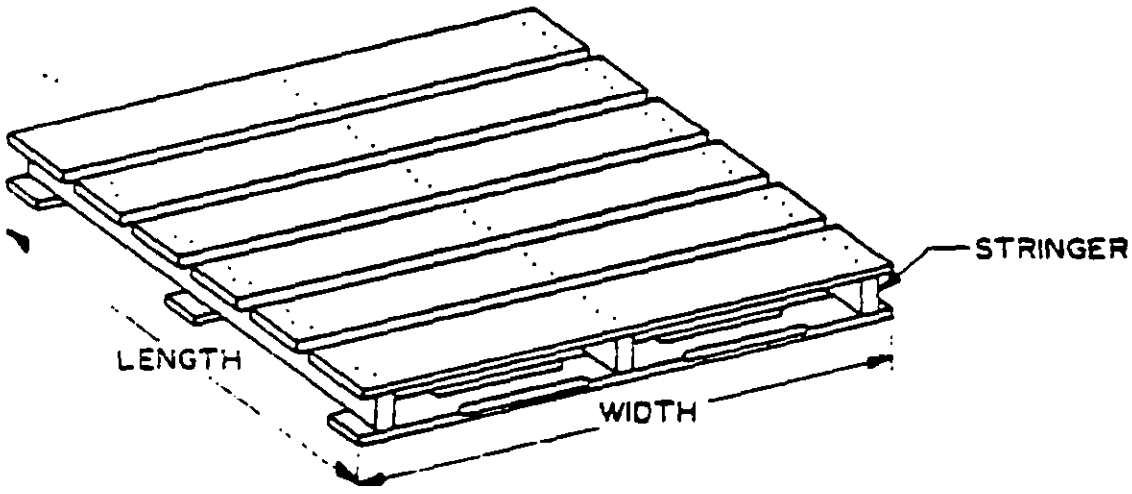

FIGURE 2. TYPE II, TWO-WAY WING TYPE PALLET.

X-2414

Downloaded from http://www.everyspec.com

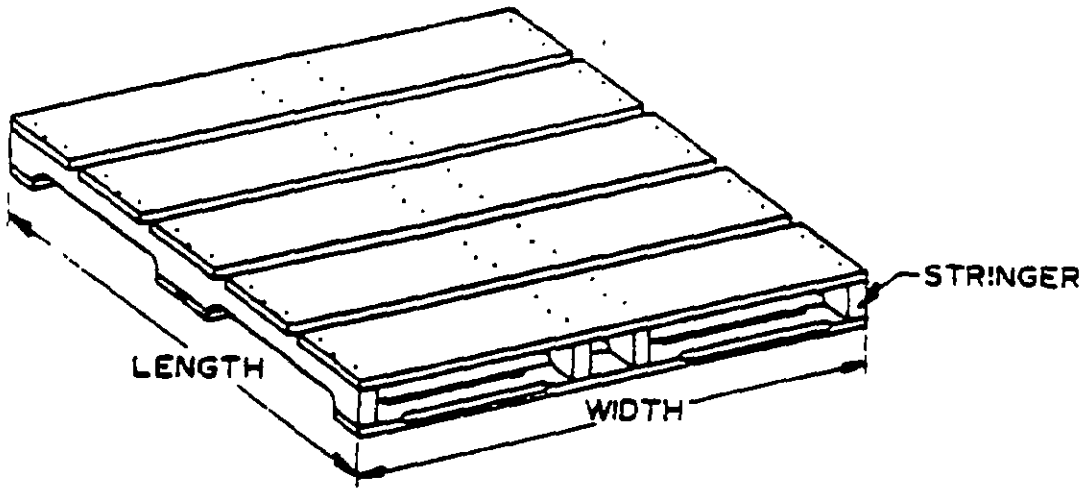

FIGURE 3. TYPE III, FOUR-WAY (PARTIAL) FLUSH PALLET.

X-2415

Downloaded from http://www.everyspec.com

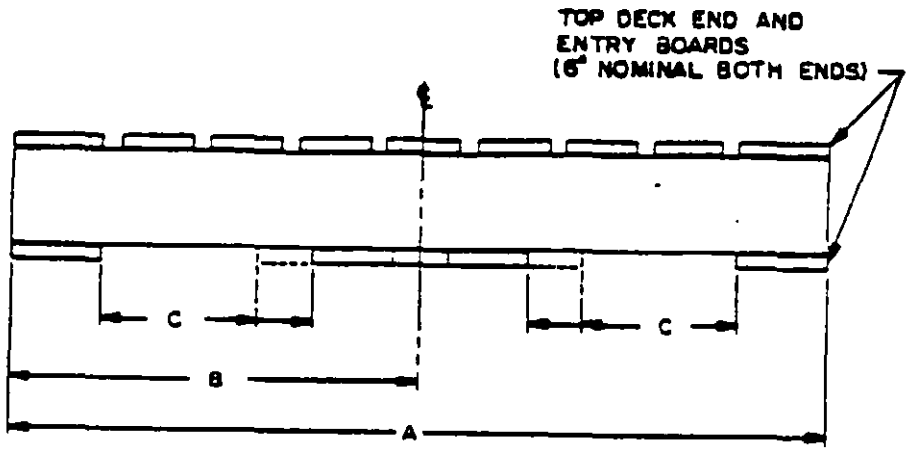

PALLET LENGTH	NO. OF BOTTOM DECKBOARDS	DIMENSIONS IN INCHES			NOTES
		A	B	C	
32	3	32	16	8 TO 9-1/4	----------
40	3	40	20	12 TO 13-1/4	----------
48	4	48	24	13-1/4 TO 15	THE TWO CENTERBOARDS SHALL BE CENTERED ABOUT THE CENTERLINE (℄) AND SPACED 1 TO 1-1/2 INCHES APART, AS INDICATED BY THE PHANTOM LINES SHOWN ON THE ABOVE VIEW.

FIGURE 4. SPACING OF BOTTOM DECKBOARDS FOR NONREVERSIBLE PALLETS (TYPES I, II, III, & IV).

Downloaded from http://www.everyspec.com

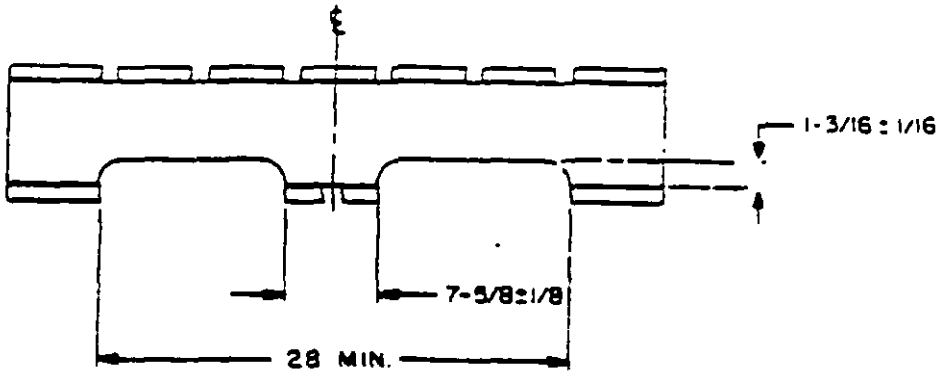

NOTES:

1. DIMENSIONS ARE IN INCHES.
2. NOTCHES ARE TO BE CENTERED ABOUT THE CENTERLINE (℄)
3. CORNERS OF NOTCHES SHALL BE ROUNDED AS INDICATED.
4. ONE OR TWO BOTTOM DECKBOARDS MAY BE USED AT THE CENTER

FIGURE 5. STRINGER AND DECKBOARD DESIGN FOR TYPE III PALLETS (4-WAY PARTIAL).

X-2417

Downloaded from http://www.everyspec.com

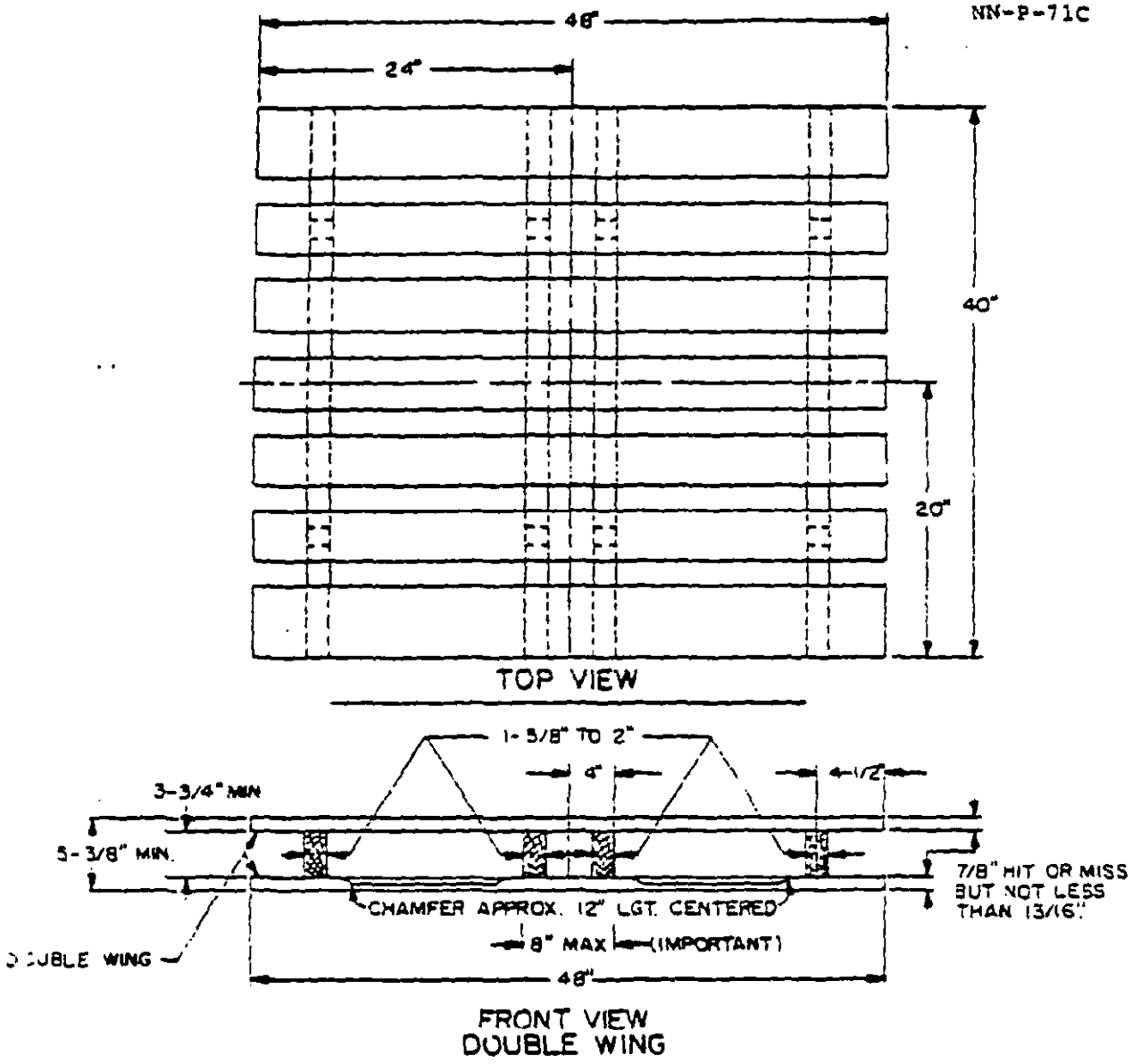

FIGURE 6. TYPE V, 4-WAY PARTIAL WING SIZE 2 (DIMENSIONS SHOWN FOR GROUP III & IV WOODS). (ALSO APPLIES TO TYPE IV PALLETS)

X-2418

Downloaded from http://www.everyspec.com

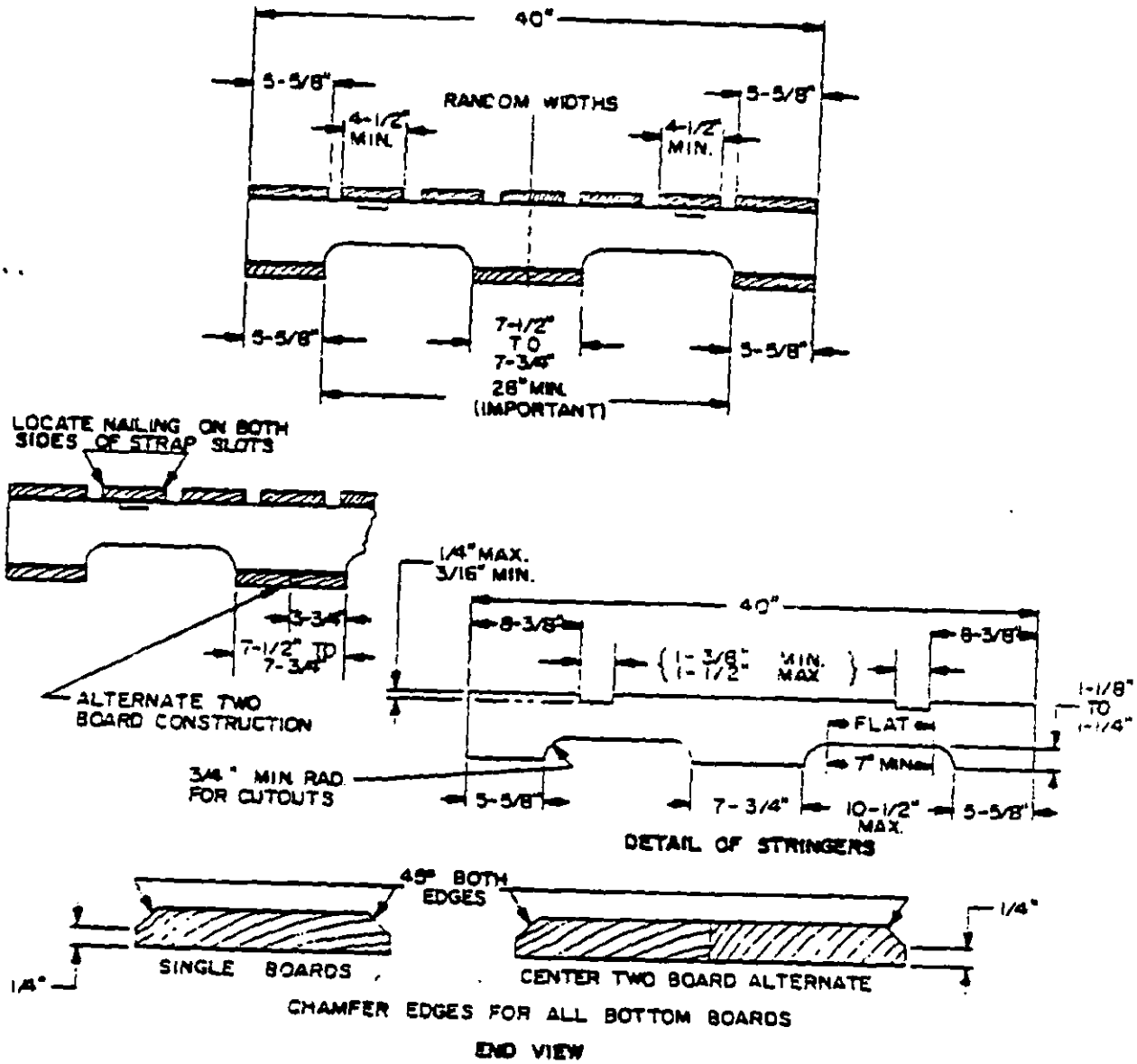

FIGURE 7. DETAIL OF PALLET COMPONENTS TYPE V, SIZE 2 (DIMENSIONS SHOWN FOR GROUP III & IV WOODS).(ALSO APPLIES TO TYPE IV PALLETS)

X-2419

Downloaded from http://www.everyspec.com

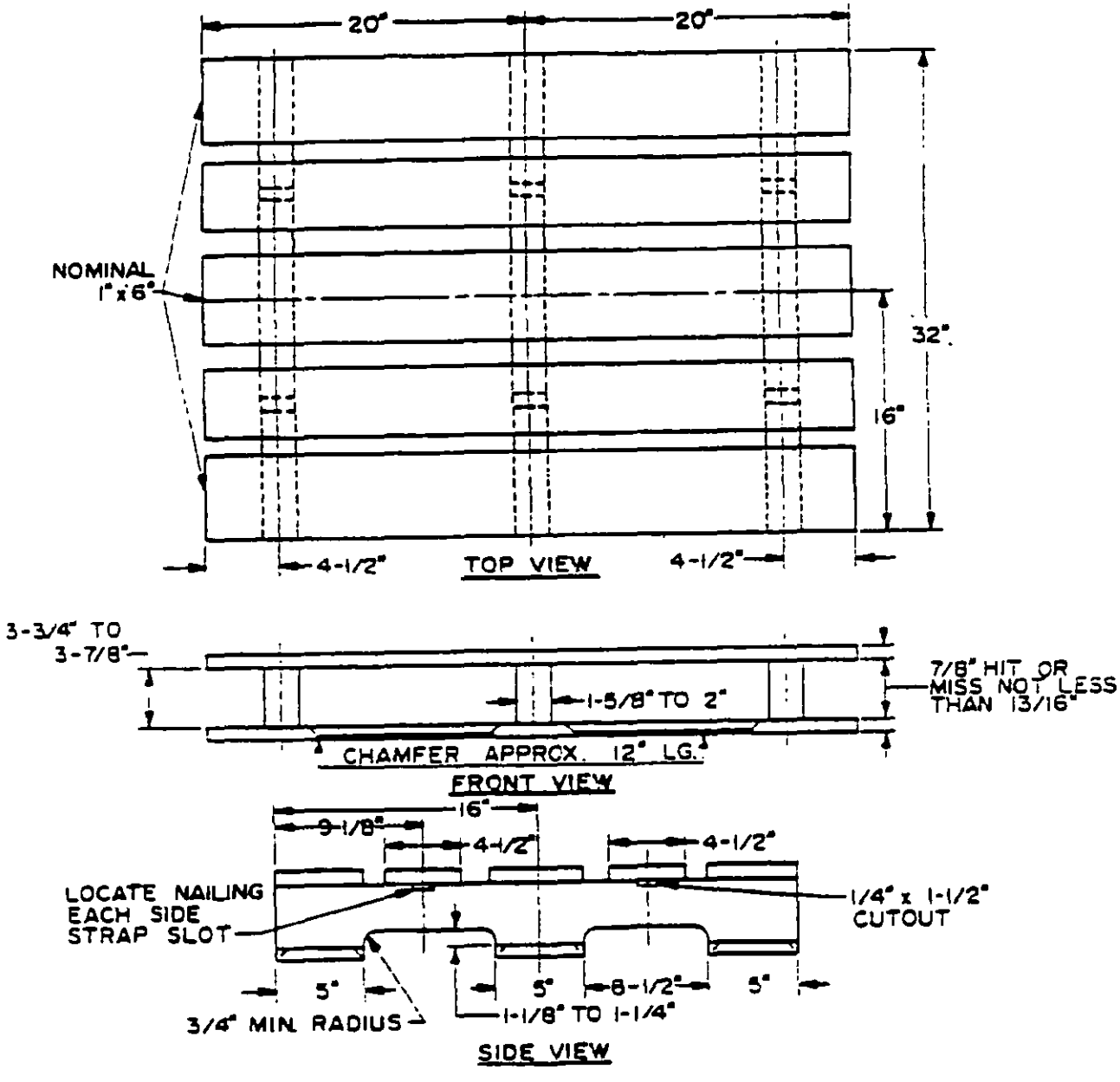

FIGURE 8. TYPE V, 4-WAY PARTIAL WING, SIZE I (DIMENSIONS SHOWN FOR GROUP III & IV WOODS).

X-2420

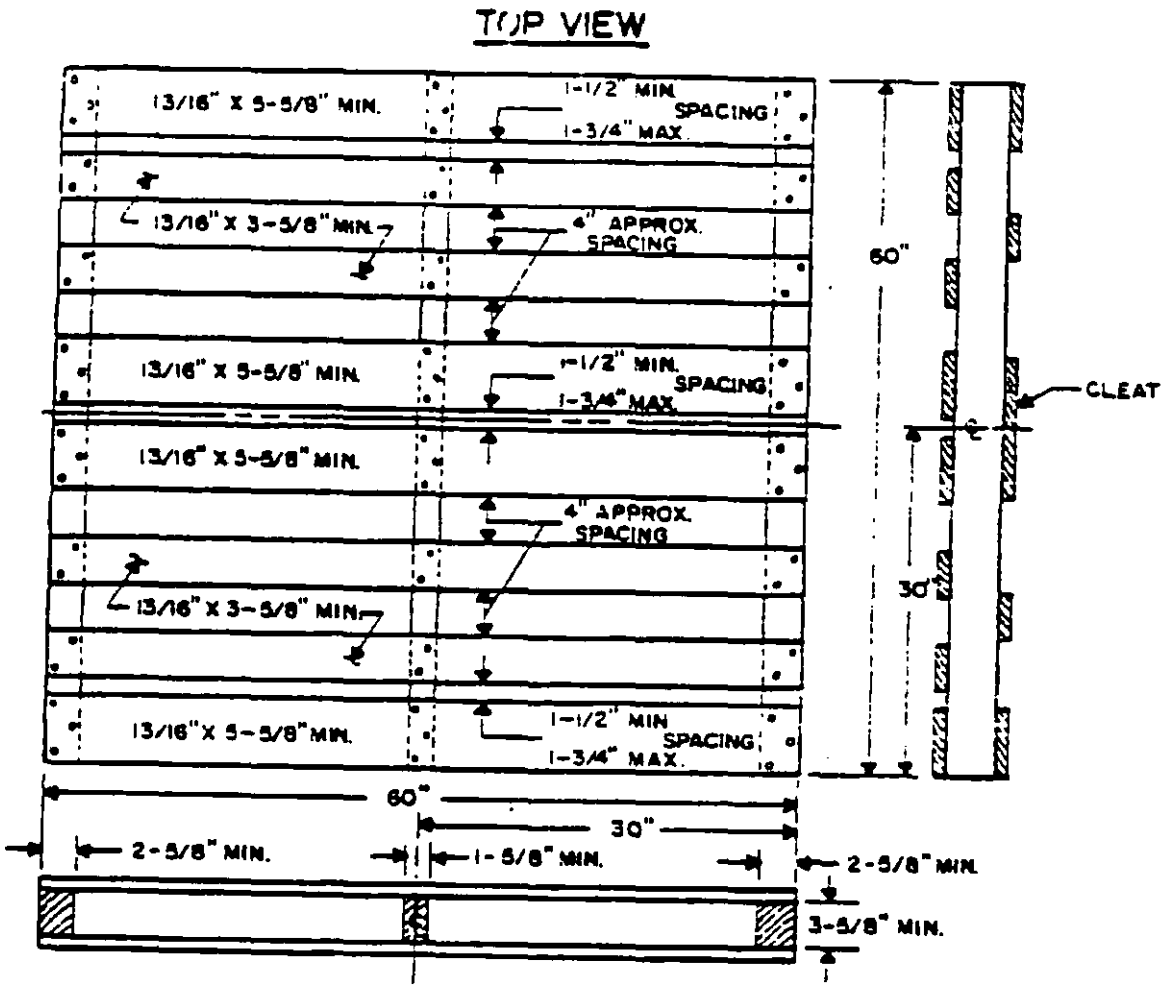

FIGURE 9. TYPE VI TWO-WAY FLUSH PALLET.

X-2421

Downloaded from http://www.everyspec.com

Downloaded from http://www.everyspec.com

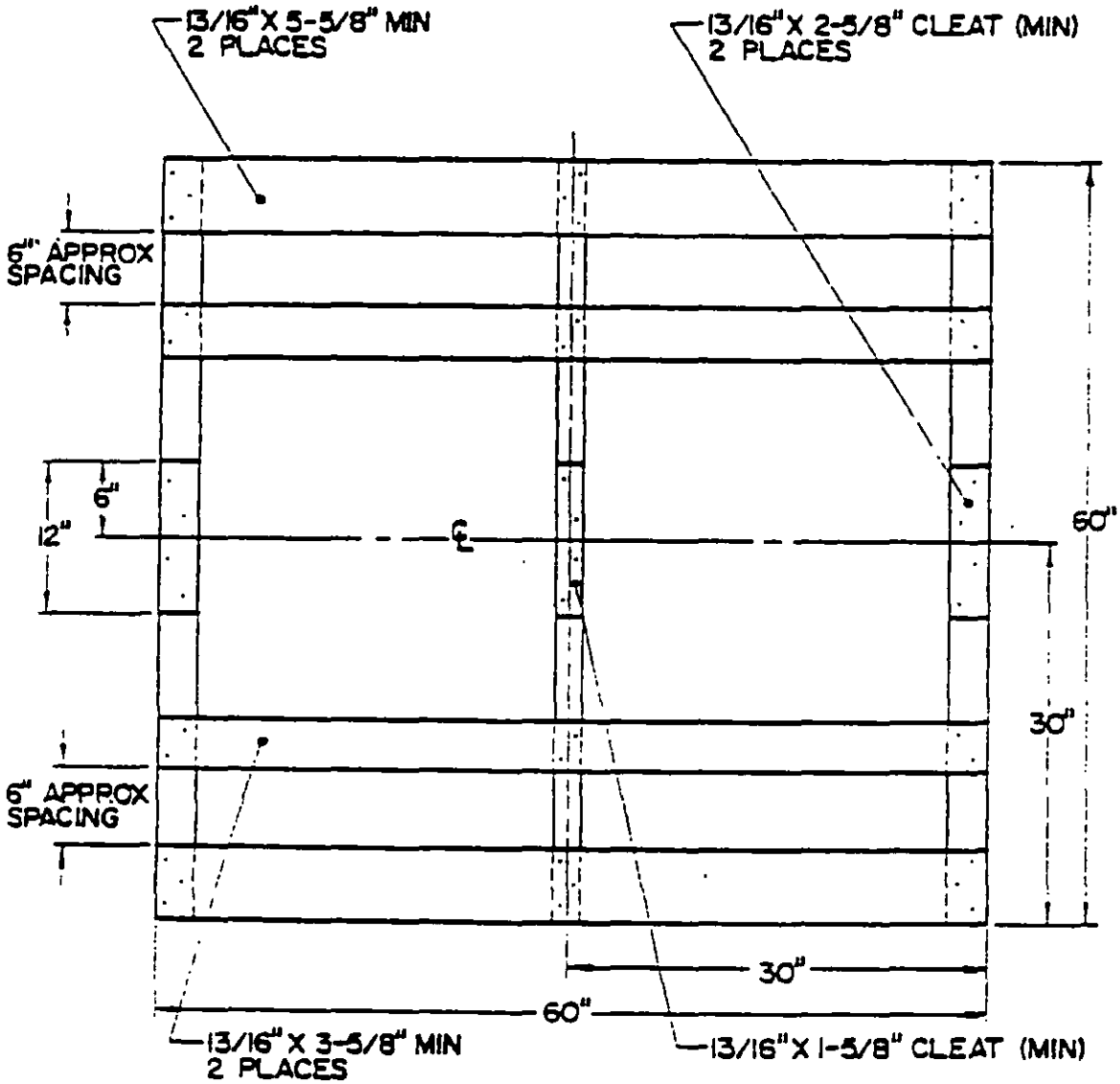

BOTTOM VIEW

FIGURE 10. TYPE VI, TWO-WAY FLUSH PALLET X-2422

Downloaded from http://www.everyspec.com

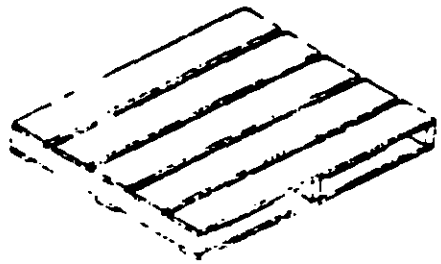

STEP I
ASSEMBLE TWO PALLETS, STYLE AND SIZE AS PER CONTRACT OR ORDER

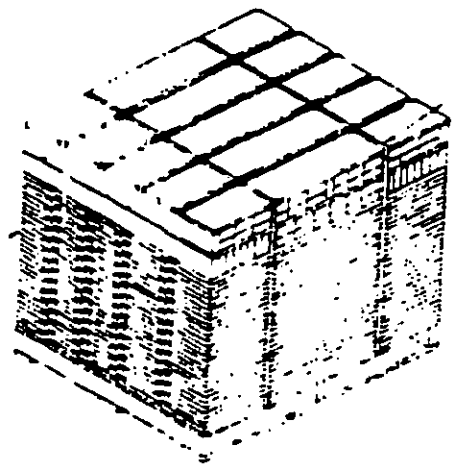

STEP II
DECK BOARDS OF THE 18 UNASSEMBLED PALLETS SHALL BE STACKED AS SHOWN, EXCEPT FOR 4 DECK BOARDS. ATOP THE DECK BOARDS, 30 STRINGERS SHALL BE PLACED AS SHOWN. THE OTHER ASSEMBLED PALLET SHALL NEXT BE PLACED ATOP THE STACKED STRINGERS WITH 24 STRINGERS PLACED WITHIN IT AS SHOWN

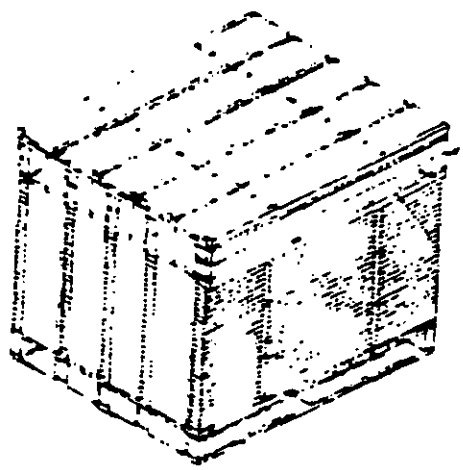

STEP III
FOUR DECK BOARDS SHALL BE NAILED AS SHOWN (2 EACH SIDE) TO RETAIN STRINGERS. NAIL AT MANY RANDOM WITH BOARDS TO LOOK AS REQUIRED TO RETAIN DECK BOARDS. SPACING OF BOARDS NOT TO EXCEED 3-1/4". THESE BOARDS ARE NOT PALLET COMPONENTS

[illegible] TYPE ARRANGEMENT MAY BE ADJUSTED TO ACCOMODATE ANY SIZE PALLET

FIGURE 11. PACKING OF 20 UNASSEMBLED PALLETS FOR SHIPMENT.

X-2423

Downloaded from http://www.everyspec.com

MILITARY INTEREST

Custodians:

Army - ME
Navy - SA
Air Force - 84

Military Coordinating Activities:

Army - GL, SM
DSA - DGSC

Civil Agencies Coordinating Activities:

GSA - FSS
AGR - AFS
COMMERCE - NBS

User activities:

Army - GL, SM
DSA - DGSC

Preparing activity:

Army - DGSC

Project No. 3990-0074

Orders for this publication are to be placed with General Services Administration, acting as an agent for the Superintendent of Documents. See section 2 of this specification to obtain extra copies and other documents referenced herein. Price 30 cents each.

Downloaded from http://www.everyspec.com

INSTRUCTIONS: In a continuing effort to make our standardization documents better, the DoD provides this form for use in submitting comments and suggestions for improvements. All users of military standardization documents are invited to provide suggestions. This form may be detached, folded along the lines indicated, taped along the loose edge *(DO NOT STAPLE)*, and mailed. In block 5, be as specific as possible about particular problem areas such as wording which required interpretation, was too rigid, restrictive, loose, ambiguous, or was incompatible, and give proposed wording changes which would alleviate the problems. Enter in block 6 any remarks not related to a specific paragraph of the document. If block 7 is filled out, an acknowledgement will be mailed to you within 30 days to let you know that your comments were received and are being considered.

NOTE: This form may not be used to request copies of documents, nor to request waivers, deviations, or clarification of specification requirements on current contracts. Comments submitted on this form do not constitute or imply authorization to waive any portion of the referenced document*(s)* or to amend contractual requirements.

(Fold along this line)

(Fold along this line)

DEPARTMENT OF THE ARMY

NO POSTAGE NECESSARY IF MAILED IN THE UNITED STATES

OFFICIAL BUSINESS
PENALTY FOR PRIVATE USE $300

BUSINESS REPLY MAIL
FIRST CLASS PERMIT NO. 13082 WASHINGTON D. C.
POSTAGE WILL BE PAID BY THE DEPARTMENT OF THE ARMY

Commander
US Army Mobility Equipment Research & Development Command
ATTN: DRDME-DS
Fort Belvoir, VA 22060

Downloaded from http://www.everyspec.com

(TO DETACH THIS FORM, CUT ALONG THIS LINE.)

STANDARDIZATION DOCUMENT IMPROVEMENT PROPOSAL

(See Instructions – Reverse Side)

1. DOCUMENT NUMBER

2. DOCUMENT TITLE

3a. NAME OF SUBMITTING ORGANIZATION

4. TYPE OF ORGANIZATION *(Mark one)*

- ☐ VENDOR
- ☐ USER
- ☐ MANUFACTURER
- ☐ OTHER *(Specify)*: _____

b. ADDRESS *(Street, City, State, ZIP Code)*

5. PROBLEM AREAS

a. Paragraph Number and Wording:

b. Recommended Wording:

c. Reason/Rationale for Recommendation:

6. REMARKS

7a. NAME OF SUBMITTER *(Last, First, MI)* – Optional

b. WORK TELEPHONE NUMBER *(Include Area Code)* – Optional

c. MAILING ADDRESS *(Street, City, State, ZIP Code)* – Optional

8. DATE OF SUBMISSION *(YYMMDD)*

DD FORM 82 MAR 1426

PREVIOUS EDITION IS OBSOLETE.