MMM-A-134
August 17, 1970
SUPERSEDING
MIL-A-8623A
April 12, 1957

FEDERAL SPECIFICATION

ADHESIVE, EPOXY RESIN, METAL TO METAL STRUCTURAL BONDING

This specification was approved by the Commissioner, Federal Supply Service, General Services Administration, for the use of all Federal agencies.

1. SCOPE AND CLASSIFICATION

1.1 Scope. This specification covers epoxy resin adhesives for structural bondings such as the fabrication and repair of airframe parts, components, and other applications requiring bonding of a similar quality. (See 6.1)

1.2 Classification. Adhesives covered by this specification shall be furnished in the following types as specified (see 6.3):

Type I - Room temperature setting (see 3.3.2.1.1).
Type II - Intermediate temperature setting (see 3.3.2.1.2).
Type III - High temperature setting (see 3.3.2.1.3).

2. APPLICABLE DOCUMENTS

2.1 The following specifications and standards, of the issues in effect on date of invitation for bids or request for proposal, form a part of this specification to the extent specified herein:

Federal Specifications:

QQ-A-250/5 — Aluminum Alloy, Alclad 2024, Plate and Sheet.

TT-I-735 — Isopropyl Alcohol.

TT-S-735 — Standard Test Fluids; Hydrocarbon.

PPP-B-566 — Boxes, Folding, Paperboard.

Federal Specifications: (Cont'd)

PPP-B-601	—	Boxes, Wood, Cleated - Plywood.
PPP-B-636	—	Box, Fiberboard.
PPP-B-640	—	Boxes, Fiberboard, Corrugated, Triple Wall.
PPP-B-665	—	Box, Paperboard, Metal Stayed (Including Stay Material).
PPP-B-676	—	Boxes, Setup.
PPP-C-96	—	Cans, Metal, 28 Gage and Lighter.

Federal Standards:

FED-STD-123	—	Marking for Domestic Shipment (Civilian Agencies)
Fed. Test Method Std. No. 141	—	Paint, Varnish, Lacquer and Related Materials, Methods of Inspection, Sampling, and Testing.
Fed. Test Method Std. No. 151	—	Metals, Test Methods.
Fed. Test Method Std. No. 175	—	Adhesives, Methods of Testing.

(Activities outside the Federal Government may obtain copies of Federal Specifications and Standards as outlined under General Information in the Index of Federal Specifications and Standards and at the prices indicated in the Index. The Index, which includes cumulative monthly supplements as issued, is for sale on a subscription basis by the Superintendent of Documents, U.S. Government Printing Office, Washington D.C. 20402.

(Single copies of this specification and other product specifications required by activities outside the Federal Government for bidding purposes are available without charge at the General Services Administration Regional Offices in Boston, New York, Atlanta, Chicago, Kansas City, Mo., Fort Worth, Denver, San Francisco, Los Angeles, Seattle, and Washington, D.C.

(Federal Government activities may obtain copies of Federal Specifications and Standards and the Index of Federal Specifications and Standards from established distribution points in their agencies.)

Military Specifications:

MIL-H-5606	Hydraulic Fluid, Petroleum Base, Aircraft, Missile, and Ordnance
MIL-A-9067	Adhesive Bonding, Process and Inspection Requirements for

Military Standards:

MIL-STD-105	Sampling Procedures and Tables for Inspection by Attributes
MIL-STD-129	Marking for Shipment and Storage

(Copies of specifications, standards, drawings, and publications required by suppliers in connection with specific procurement functions should be obtained from the procuring activity or as directed by the contracting officer.)

2.2 Other publications. The following documents form a part of this specification to the extent specified herein. Unless otherwise indicated, the issue in effect on date of invitation for bids or request for proposal shall apply.

AMERICAN SOCIETY FOR TESTING AND MATERIALS

ASTM D1062-51	Cleavage Strength of Metal to Metal Adhesive Bonds

(Application for copies of ASTM standards should be addressed to the American Society for Testing and Materials, 1916 Race Street, Philadelphia, Pennsylvania 19103.

UNITED STATES OF AMERICA STANDARDS INSTITUTE

USAS B46	Surface Texture

(Application for copies of USAS standards should be addressed to the United States of America Standards Institute 10 East 40th Street, New York, New York 10016 or from the American Society of Mechanical Engineers Order Department, United Engineering Center, 345 East 47th Street, New York, New York 10017.)

UNIFORM CLASSIFICATION COMMITTEE

Uniform Freight Classification

(Application for copies should be addressed to the Uniform Classification Committee, 202 Union Station, 516 West Jackson Boulevard, Chicago, Illinois 60606.)

National Classification Board.

National Motor Freight Classification

(Application for copies should be addressed to the American Trucking Associations, Inc., 1616 P Street N.W., Washington, D.C. 20036.)

3. REQUIREMENTS

3.1 Qualification. The adhesive furnished under this specification shall be a product which is qualified for listing on the applicable qualified product list at the time set for opening of bids (see 4.5 and 6.4).

3.2 Material. The adhesives shall contain thermosetting resin of the epoxy type as the basic ingredient. Fillers may be included. Except as other wise specified by the procuring agency, there should be no restrictions on the physical forms (such as liquid, film) used in the adhesives provided they meet the applicable requirements specified herein. Adhesives shall be non-corrosive to th metal surfaces being bonded.

3.2.1 Type I and type II. These adhesives shall be two-part materi: consisting of the adhesive base and an activator which may be an amine type material.

3.2.2 Type III. This adhesive shall be furnished as a one part material either film or wet form. The activator shall be incorporated into the base adhesive.

3.2.3 Liquid form. Adhesives in liquid form shall mix readily to a smooth solution or suspension of a consisteney suitable for application and shall free of lumps. The components shall not settle out during a working period of eight hours.

3.2.4 Film form. Adhesives in the film form shall consist either entirely of adhesive or a carrier impregnated with adhesive. The material and treatment of the carrier shall be designated. If necessary, an activating solvent shall be furnished and used with adhesive in film form.

3.2.5 Formulation changes. The adhesive shall be approved only for the formulation which has passed the qualification tests and shall be used by the fabricator as approved. Any changes by the manufacturer, such as the addin of pigments, hardeners, or fillers, or changing the type or the method of

manufacture, changes in formulation of the base resin, or any other changes, shall be cause for designating the adhesive as a new product which shall not be considered approved. The changed adhesive shall be given a new code number and shall be resubmitted for approval under this specification. Recommendations of the manufacturer for changes in the instruction sheet should be submitted to the qualifying activity for approval.

3.2.5.1 Code number. The manufacturer shall designate each adhesive by a code number which shall be used to identify the adhesive. A trade name, if accompanied by a code number, may also be used.

3.3 Working characteristics.

3.3.1 Application life. The application life of the adhesives when mixed and ready for use at 73.5° ±2° F. (23° ±1° C.) shall be a minimum of 1/2 hour for type I, 2-1/2 hours for type II, and 1 year for type III. Type I and type II adhesives shall be considered to have reached the end of their working life when viscosity reaches 160,000 centipoises (see 4.6.3.2).

3.3.2 Curing time. Unless otherwise approved by the procuring activity, the curing time, temperature, and pressure shall be within the limitations specified herein.

3.3.2.1 Curing time and temperature.

3.3.2.1.1 Type I. When subjected to a temperature not to exceed 164° F. (74° C.) at the bonding line, the type I adhesive shall cure in 1 hour. At a temperature of 86° ±2° F. (30° ±1.1° C.), the cure time shall not exceed 7 days.

3.3.2.1.2 Type II. A period of two hours maximum at a temperature not to exceed 210° ±2° F. (99° ±1° C.) shall be required for type II adhesive to harden at the bond line. This shall be followed by a period of 7 days at a temperature of 73.5° ±2° F. (23° ±1.1° C.) to effect complete curing of the type II adhesive.

3.3.2.1.3 Type III. A bond line temperature of 210° F. (99° C.) is required to harden the type III adhesive. Maximum cure time for type III shall be 7 hours at a temperature not exceeding 350° F. (177° C.).

3.3.2.2 Curing pressure. The pressure required for curing the bonded test panels described in this specification shall not exceed 10 pounds per square

inch. Type I adhesive shall be capable of curing and making satisfactory bonded joints as described within this specification when only contact pressure is applied during the period of cure.

3.3.3 Storage life. The adhesives as furnished by the manufacturer shall be capable of conforming to the minimum shear strength requirements at 73.5° ±2° F. (23° ±1.1° C.) and at 180° ±2° F. (82° ±1.1° C.) and to the requirements for application life after storage for one year at a temperature not exceeding 86° ±2° F. (30° ±1.1° C.) at standard test conditions in the absence of sunlight. (See 4.5.5.11.)

3.4 Mechanical properties. Mechanical properties of test specimens prepared and tested as specified in section 4 shall conform to the respective requirements listed in table I.

3.4.1 Cleavage strength. The cleavage strength of the adhesive shall be a minimum of 1000 pounds for type I and type II, and a minimum of 1500 pounds for type III when tested in accordance with 4.5.5.10.

3.5 Instruction sheet. The manufacturer shall provide a dated, coded, and titled instruction sheet with the test report supplied when requesting qualification (see 4.5.4) and also with each shipment of adhesive (see 5.1.3) outlining instructions for its use. The instruction sheet shall include the following information:

(a) Manufacturer's description of the base polymer, modifier, filler and pigment, if any, used in the adhesive. Solvent (if required) should also be included.

(b) Maximum usable storage and pot life of the adhesive, with and without the addition of activators at 73.5° ±2° F. (23° ±1.1° C.) and at various temperatures between 32° F. (0° C.) and 98.6° F. (37° C.). The pot life of adhesive after the addition of the activator, shall be based on definite quantities of the adhesive.

(c) Mixing instructions including recommended type and percentage of activator, minimum, and maximum percent of activator allowed, and temperature control necessary when mixing and thinning.

(d) Complete recommended pre-bonding treatments and metal cleaning processes including proportions of materials necessary to prepare cleaning media.

Table I. Mechanical properties of bonded joints

Test No.	Property	Test conditions of test panels	No. of specimens to be tested 1/	Test temperatures	Paragraph reference	Minimum average strength requirement (psi) 1/		
						TYPE I 2/	TYPE II 2/	TYPE III 2/
1	Tensile shear	Normal temperature 73.5°±2°F. (23°±1.1°C.)	6	73.5°±2°F. (23°±1.1°C.)	4.5.5.1	2,500 3/	2,500 3/	2,500
2	Tensile shear	60 minutes at 160°±5°F. (71°C.)	6	73.5°±2°F. (23°±1.1°C.)	4.5.5.1	2,500 3/	2,500 3/	2,500
3	Tensile shear	60 minutes at 160°±5°F. (71°C.) 30 minutes at -67° ±2°F. (-55°±1.1°C.)	6	-67°±2°F. (-55°±1.1°C.)	4.5.5.3	1,800	2,000	2,500
4	Tensile shear	30 minutes at 180°±2°F. (83.3°±1.1°C.)	6	180°±2°F. (83.3°±1.1°C.)	4.5.5.2	1,250 3/	1,250 3/	1,500 3/
5	Tensile shear	30 minutes at -67°±2°F. (-55°±1.1°C.)	6	-67°±2°F. (-55°±1.1°C.)	4.5.5.3	1,300	2,500	2,500
6	Creep-rupture strength	Normal temperature 73.5°±2°F. (23°±1.1°C.)	6	73.5°±2°F. (23°±1.1°C.)	4.5.5.5 and 4.5.5.7	1,600	1,600	1,600
						200 hours, 0.025 inch (max.) deformation		
7	Creep-rupture strength	Normal temperature 73.5°±2°F. (23°±1.1°C.)	6	180°±2°F. (83.3°±1.1°C.)	4.5.5.6 and 4.5.5.8	300	300	300
						200 hours, 0.025 inch (max.) deformation		
8	Fatigue strength	Normal temperature 73.5°±2°F. (23°±1.1°C.)	15	73.5°±2°F. (23°±1.1°C.)	4.5.5.4	650	600	600
9	Tensile shear	Normal temperature 73.5°±2°F. (23°±1.1°C.) after immersion for 250 hours in salt-water spray	6	73.5°±2°F. (23°±1.1°C.)	4.5.5.9	2,500 3/	2,250 3/	2,250 3/
10	Tensile shear	168 hours accelerated weathering	6	73.5°±2°F. (23°±1.1°C.)	4.5.5.9	2,000	2,000	2,000
11	Tensile shear	Normal temperature 73.5°±2°F. (23°±1.1°C.) after immersion for 7 days in respective fluids of Table II 4/	6	73.5°±2°F. (23°±1.1°C.)	4.5.5.9	2,400	2,500	2,500

1 Of the 6 specimens, 2 shall be from each of the batches of adhesive (4.5.2). Of the 15 specimens, 5 shall be from each of the batches of adhesive (4.5.2). The average strength shall meet the respective minimum average requirement, and the strength of any individual specimen shall be not less than 90 percent of this minimum average requirement.
2 Tests applicable to types I, II, and III adhesives are to be made with aluminum-alloy specimens (see 4.4).
3 These strength requirements also apply to storage life tests (see 4.5.5.11).
4 See Table II

(e) Application instructions including cleaning procedures, spread method, spread rate, number of coats, weight range, application temperature and relative humidity, acceptable bond-line thickness range before and after cure, and method of cleaning equipment.

(f) Maximum allowable open assembly time and temperature-humidity controls and protective measures necessary during storage for adhesive-coated metal prior to assembly.

(g) Maximum allowable closed assembly time and temperature-humidity controls and protective measures necessary during storage for adhesive-coated and assembled parts prior to cure.

(h) Typical time, temperature, and pressure for each segment of the complete curing cycle giving maximum and minimum limits for each condition.

(i) Maximum storage life (see 3.3.3).

(j) Necessary safety precautions to be observed throughout all operations.

(k) Any other pertinent information relative to the use and storage of the adhesive or curing agent, or both.

4. QUALITY ASSURANCE PROVISIONS

4.1 Responsibility for inspection. Unless otherwise specified in the contract or purchase order, the supplier is responsible for the performance of all inspection requirements as specified herein. Except as otherwise specified in the contract or order, the supplier may use his own or any other facilities suitable for the performance of the inspection requirements specified herein, unless disapproved by the Government. The Government reserves the right to perform any of the inspections set forth in the specification where such inspections are deemed necessary to assure that supplies and services conform to prescribed requirements.

4.2 Classification of tests. The inspection and testing of the adhesive shall be classified as follows:

(a) Qualification tests (4.5)

(b) Quality conformance tests (4.6)

4.3 Test conditions.

4.3.1 Specimen conditioning. Unless otherwise specified in the detailed test method, all specimens shall be conditioned at 73.5° ± 2° F. (23° ± 1.1° C.) and 50 ± 4 percent relative humidity for a period of a least 7 days. Other conditioning shall be as prescribed in table I. Preparation of the test panels shall be in accordance with 4.4 and as described herein. The open assembly period sha . be zero in the preparation of 1/2 of the required panels and shall be 30 minutes or the maximum open assembly period specified by the manufacturer, if greater than 30 minutes, for the remaining panels.

4.3.2 Normal (room temperature conditions). Strength properties shall be determined for room temperature adhesive at 73.5° ± 2° F. (23° ± 1.1° C.) no sooner than 10 minutes after specimens have reached equilibrium at such temperature. If the validity of property values determined within this range is questionable, the test shall then be repeated under a standard 73.5° ±2° F. (23° ±1.1° C.) temperature and 50 ±4 percent relative humidity. Specimens shall then be tested only after being exposed for 7 days to this temperature and humidity.

4.3.3 Elevated temperature conditions. Conditioning of specimens for elevated shear strength tests shall require a suitable oven to maintain the specimen within 2° F. (1.1° C.) temperature range of the test condition requirement prescribed in table I prior to testing.

4.3.4 Low temperature conditions. Conditioning of the specimens for low temperature shear strength tests shall require a suitable conditioning chamber to maintain the specimen at -67° ± 2° F. (-55° ± 1.1° C.) for a period of 30 minutes prior to testing. Where prior conditioning at 160° F. (71° C.) is required, the specimen shall be placed in the cold temperature directly from the prior conditioning temperature.

4.3.5 Salt water spray conditions. Resistance to salt spray shall be determined by exposure of the panels for 250 hours in accordance with Method 811.1 of Fed. Test Method Std. No. 151, except as hereby modified. The bonded test panels shall be vertically suspended from the top by means of glass hooks, waxed strings, or other nonmetallic materials through holes as indicated in figure 1 with the plane of the panel parallel to the principal direction of flow of the salt spray through the chamber. Individual panels shall not contact each other or any metallic material.

4.3.6 Fluid immersion conditions. Panels shall be immersed in the respective fluids listed in table II for 7 days ± 2 hours, except that 30 days ± 2 hours shall be used for the water immersions. The temperature of these fluids should be maintained at 70° to 80° F. (21° to 27° C.). The water immersion panels shall also be suspended from the edge of a hole as shown in figure 1. The remaining panels need not be so suspended. However, all panels must be so suspended or set in the containers as to insure full contact of the respective fluids with the bonded

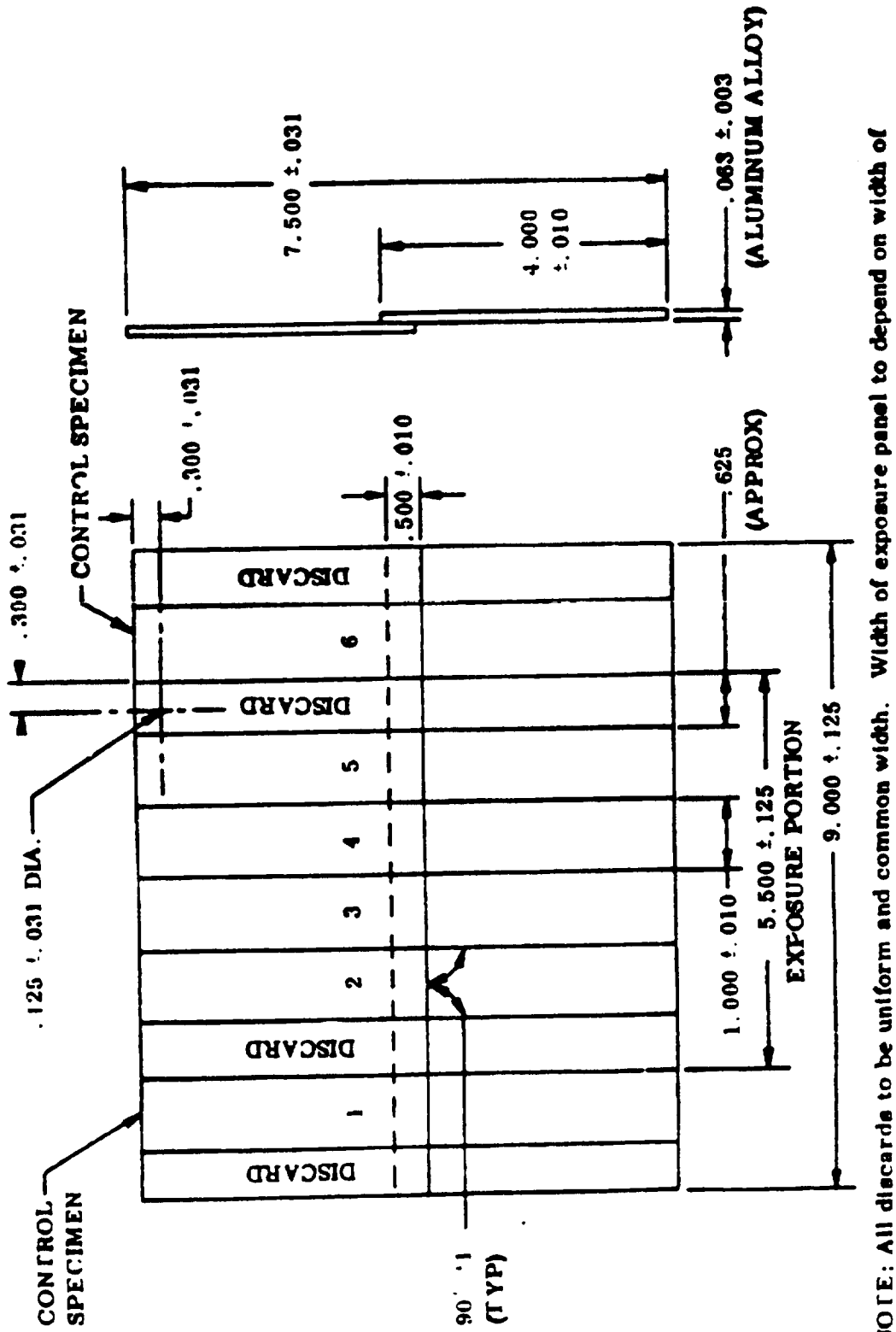

NOTE: All discards to be uniform and common width. Width of exposure panel to depend on width of saw kerfs.

DIMENSIONS IN INCHES.

area of the test panels. Faces of panels immersed in the same container of fluid shall not contact each other; panels shall contact the container only at the panel corners or the 9-inch edges.

TABLE II. Fluids for panel immersion tests

Fluids	Specifications	Immersion
Water	Distilled Water	30 days ±2 hours
Isopropyl alcohol	TT-I-735	7 days ±2 hours
Hydraulic fluid	MIL-H-5606	7 days ±2 hours (for types I and II adhesives)
Standard test fluids	TT-S-735	7 days ±2 hours

4.3.7 Accelerated weathering conditions. The bonded test panels shall be exposed to accelerated weathering for 168 hours in accordance with method 6152 of Fed. Test Method Std. No. 141.

4.3.8 All panels to be exposed to the conditions specified in 4.3.5, 4.3.6, 4.3.7 except those specimens taken from the ends of the panels for control-strength test purposes (4.5.5.9) shall be immersed as bonded (complete, preslotted, or prepunched) (see 4.4 and figure 1), edges unprotected and prior to being cut into specimens.

4.4 Preparation of test panels and specimens. Panels as shown in figures 1 through 4 shall be prepared in sufficient quantities (see 4.4.1), from a given type of adhesive to furnish the necessary number of specimens for all the tests applicable to that particular type of adhesive listed in table I. Panels for testing types I, II, and III adhesives for all applicable table I properties shall be prepared from 0.063-inch clad 2024-T3 aluminum-alloy sheet conforming to QQ-A-250/5. All edges of the metal panels and specimens which will be within (or which will bound) the joints shall be machined true (without burrs or bevels and at right angles to faces) and smooth (RHR 140 maximum, in accordance with USAS B46.1-1966) before the panels are surface treated and bonded. The metal treating and bonding procedure employed shall be in accordance with the adhesive manufacturer's instruction sheet. All test panels shown in figures 1 and 2 shall have an overlap of 0.500 ±0.010 inch except the figure 2 fatigue test panels, which shall have an overlap of 0.375 ±0.010 inch. Panels so prepared shall be cut into 1-inch wide specimens for testing in accordance with the provisions of applicable tests. Panels shall not be cut into specimens until at least 24 hours after bonding. Aluminum-alloy panels may be sawed with a bandsaw, with the setting and spacing of teeth and operational speed adjusted to hold frictional heating of the bond to a minimum.

4.4.1 Number of panels and specimens required for tests.

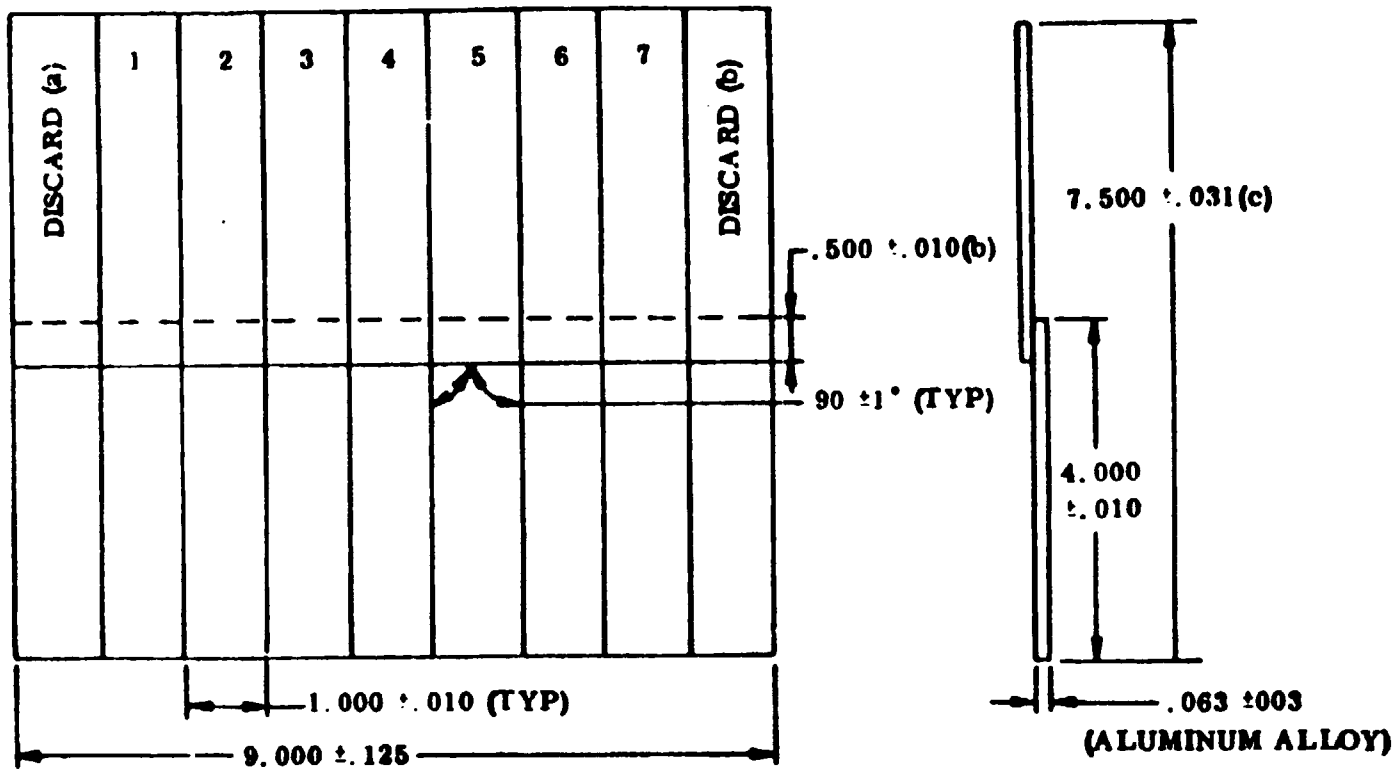

(a) ALL DISCARDS TO BE OF COMMON WIDTH AS DETERMINED BY WIDTH OF CUTTING TOOL

(b) .375 ±.010 FOR FATIGUE SPECIMEN PANEL.

(c) 7.625 ±.031 FOR FATIGUE SPECIMEN PANEL.

DIMENSIONS IN INCHES.

Figure 2. Standard test panel

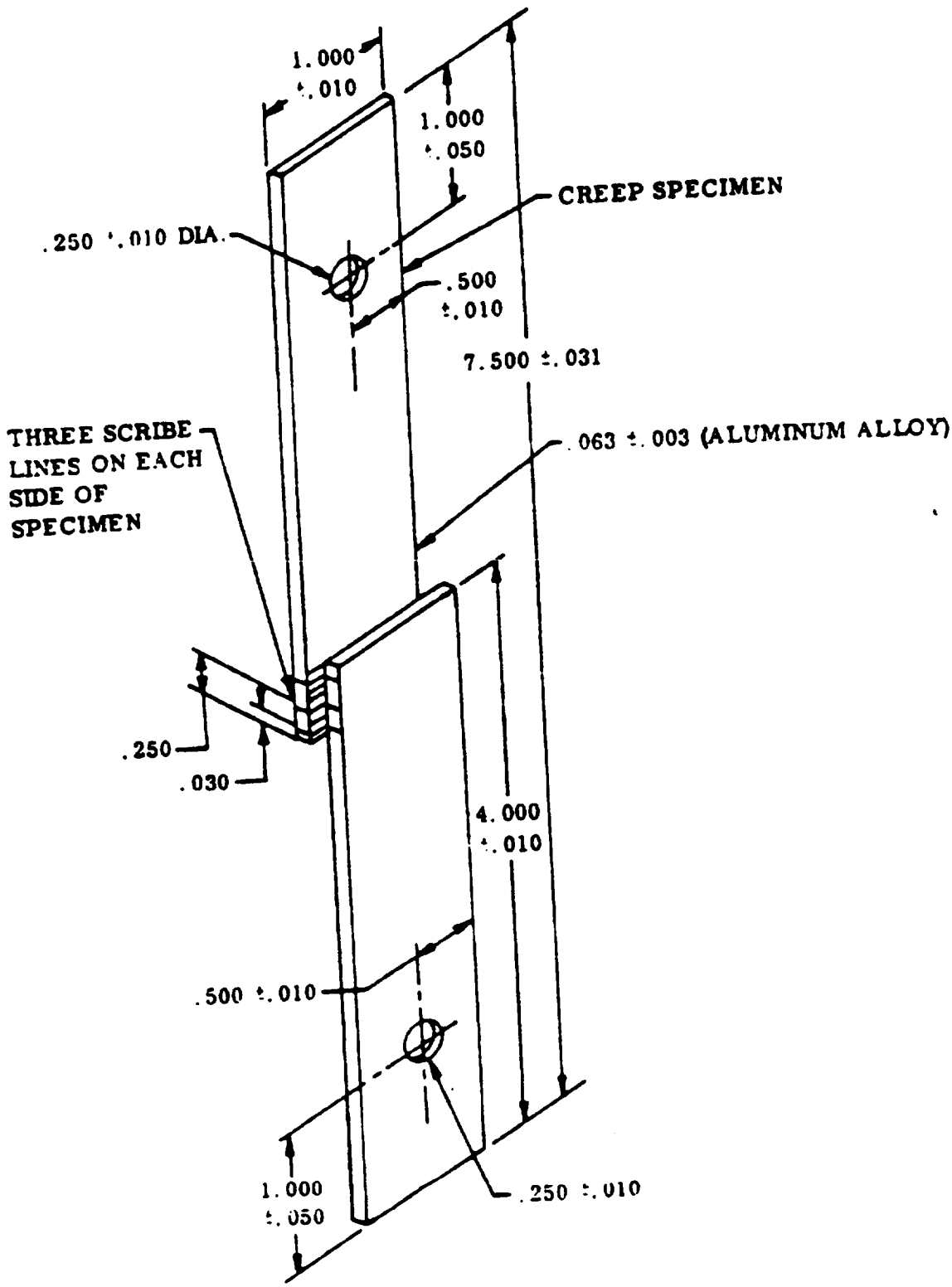

Figure 3 Creep rupture test specimen showing location of scribe lines

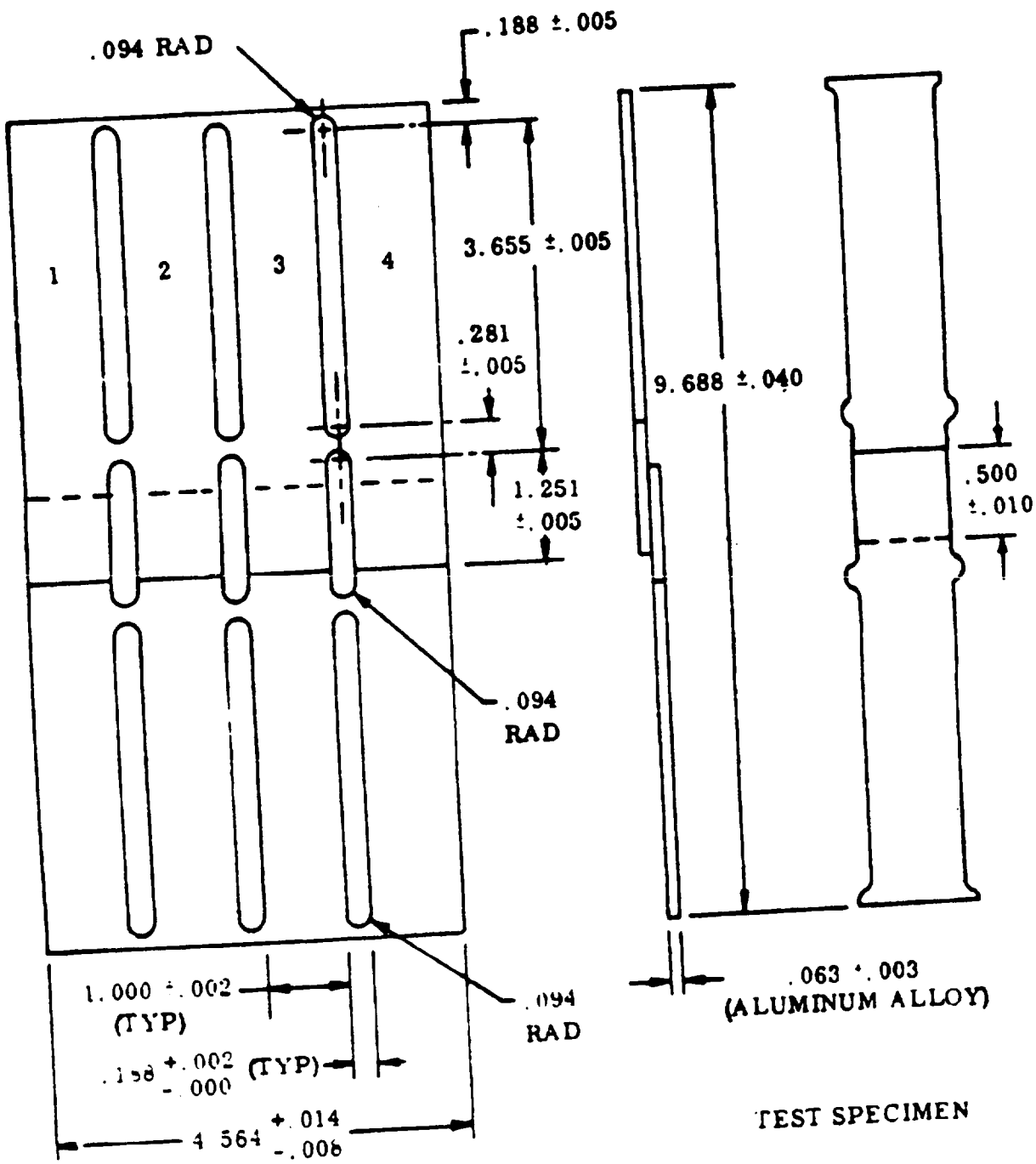

DIMENSIONS IN INCHES.

Figure 4 Optional panel

4.4.1.1 Tensile shear and creep-rupture strength (tests Nos. 1 through 7 of table I). Three panels conforming to the dimensions and marking shown in figure 2 (with 1/2 inch lap joint) shall be prepared from each of three different batches of the adhesive being presented for qualification. Each of the resultant 9 panels shall be cut as shown in figure 2 into seven 1-inch wide specimens. Each of the resultant 63 specimens shall be identified with the particular panel from which it was cut and with the particular batch of adhesive with which it was bonded so that any failure may be traced to either the adhesive or the mechanics or equipment of bonding. Specimens of each of tests Nos. 1 through 7 (when applicable) of table I and necessary retest specimens shall be taken from the 63 specimens. Respective test procedures and numbers of specimens to be tested by each procedure are specified in 4.5.5.1 to 4.5.5.3 and in 4.5.5.5 to 4.5.5.9.

4.4.1.2 Fatigue (test No. 8 of table I). One panel conforming to the dimensions and marking shown in figure 2 shall be prepared with a 3/8-inch lap joint from each of the same three batches of the adhesive used in the preparation of the panel specified in 4.4.1.1. Each of these panels shall be cut as shown in figure 2 into seven 1-inch wide (±0.010 inch) (after machining) specimens. The edges of the specimens shall be machined smooth. Selection and testing of these specimens shall be as specified in 4.5.5.4.

4.4.1.3 Tensile shear after sale water spray, accelerated weathering, and fluid immersion (tests Nos. 9, 10 and 11 of table I). Eight panels shall be prepared as shown in figure 1 with each of the same three batches of adhesive used in the preparation of the panels specified in 4.4.1.1 and 4.4.1.2. Control specimens Nos. 1 and 7 shall be cut in accordance with the procedure specified in 4.4 from each panel and shall be identified as to panel number as well as specimen number. These control specimens shall be tested at elevated temperature 180° ±2°F. (83.3° ±1°C.) after 30 minutes of temperature conditions (No. 4 of table I) as specified in 4.5.5.2. Failure of any one control specimen to meet the specified elevated temperature shear strength requirement of test No. 4 shall void the panel from which the specimen was cut for use in these exposure tests and a replacement panel shall be prepared. The resultant 24 panels (part panels) shall then be exposed at the conditions specified in 4.3.5 through 4.3.7; three panels (one panel representative of each batch of adhesive) shall be exposed at each of the conditions. After exposure, the panels shall be cut into individual specimens and tested in accordance with 4.5.5.9.

4.4.1.4 Cleavage strength. Cleavage panels shall be bonded metal in accordance with ASTM D1062-51. For acceptance tests two panels as shown in figure 2 shall be bonded and prepared.

4.5 Qualification tests.

4.5.1 Qualification retest. Unless otherwise specified by the procuring activity, adhesives which have previously passed the qualification tests but have subsequently been modified in any manner, shall satisfactorily pass retesting of the material in order to retain qualification approval. Qualification tests may be repeated on material previously found satisfactory at any time at the option of the activity responsible for qualification approval.

4.5.2 Sampling instructions. The manufacturer shall submit a duplicate set of bonded panels and specimens which shall be prepared as specified in 4.4 and subparagraphs thereto. These panels shall be prepared with adhesive samples from the same three batches of adhesive and shall be code marked the same as the panels upon which the data given in the test report (4.5.3) were obtained. The manufacturer shall also submit four 1-pint samples of liquid adhesive together with necessary curing agents, or an equivalent amount of material in weight or measure if of another form, from each of three different numbered batches of the adhesive being presented for qualification. These adhesive samples shall each be from batches of most recent production-scale manufacture, and may be from different batches than those used in preparing the above specified set of duplicate panels. Part of the adhesive samples from each batch will be used in preparing test panels for qualification tests and the balance will be used for storage life tests (4.5.5.11). All samples shall be identified as to name of manufacturer, manufacturer's designation, date of manufacture, base polymer and curing agents (as applicable), the date of submittal, and identification of the activity submitting the samples, and forwarded to the Naval Air Development Center (see 6.4). In addition, a statement indicating that the products have not been rebranded shall accompany the samples. If rebranded, the names of the original manufacturers and original designations of the products shall be indicated. All information submitted will be treated as confidential.

4.5.3 Test report. Prior to conducting the qualification tests (4.5.5), a dated and numbered report, certified by notarized affidavit, shall be furnished, giving the results of all applicable tests listed in table I. The individual specimen and average values for each test shall be reported (see 6.4.2). Each value reported shall be shown as being for a definitely numbered specimen, the numbering of which shall be coded in the report in such a manner as to definitely establish the particular panel from which the specimen was cut and the particular batch of adhesive with which said panel was bonded and the date of bonding. Coded identification of the adhesive batches shall include the respective dates of manufacture and sizes of batch. Dates on which the different tests were performed shall be shown in the test report. The test report shall also cover all the requirements of paragraphs in section 3 (except 3.5). The actual pressure, temperature, and time of curing used in the preparation of the test panels shall conform to the description given in the instruction sheet and the report shall so state.

4.5.4 **Instruction sheet.** The manufacturer shall submit attached to the test report (4.5.3) an instruction sheet in accordance with 3.5.

4.5.5 **Tests.** The qualification tests shall consist of all the tests of this specification, and shall include approval of the manufacturer's instructions. These tests will be conducted by the Naval Air Development Center (see 6.4.1). Any changes shall be subject to the approval of that activity.

4.5.5.1 Normal temperature tensile shear test (tests Nos. 1 and 2 of table I). The test specimen shall be gripped tightly and uniformly across the ends in the jaws of the testing machine with the jaws and specimen so aligned that the jaws are directly opposite each other, and in such a position that an imaginary straight line will pass through the center of the bonded area and through the points of suspension. The specimen shall be gripped 2 inches ±1/4 inch from each edge of the lap joint. The load shall then be applied at a rate of 1200 to 1400 pounds per square inch per minute or at an equivalent head speed per minute until failure. The load at failure shall be recorded. The testing machine accuracy shall be within 1 percent. Length and width of shear area shall be measured to the nearest 0.01 inch and shall be recorded. All failing loads shall be expressed in pounds per square inch of actual shear area, calculated to the nearest 0.01 square inch. The nature and percent of failure, such as cohesive failure (failure within the adhesive), adhesion failure (adhesive peeling from the metal), or contact failure (lack of complete adhesive-to-metal contact during bonding), and the adhesive thickness shall also be recorded for each specimen. Adhesive thickness shall be the micrometer thickness, measured to the nearest 0.001 inch, of the overall thickness of lap joint less the combined micrometer thickness of the individual pieces of surface-treated metal, or the adhesive thickness can be measured with a traveling comparator microscope or an equivalent measuring apparatus. A total of 6 specimens, 2 specimens representative of each of the three batches of adhesive from the lots of specimens prepared as specified in 4.4.1.1, shall be tested. The average and minimum strengths of these 6 specimens shall equal or exceed that specified for tests Nos. 1 and 2 in table I. If the strengths, either average or minimum, are less than that specified in table I, two more specimens from each of the three batches of adhesive shall be tested as a retest. If both specimens from the same batch of the adhesive fail to meet the minimum requirements in this retest and those from the other two batches of adhesive are satisfactory, a retest using 3 specimens from that same batch of adhesive shall be run. Like failure in the retest shall cause rejection of the adhesive. The normal temperature shear strengths of all 1/2-inch lap joint specimens tested in accordance with the qualification tests of this specification, except values voided and replaced by retest values, shall be averaged for use in determining the acceptance-test-required normal temperature shear strength (4.6.3.3).

4.5.5.2 Elevated temperature tensile shear test (test No. 4 of table I). The 180° ±2° F. (83.3° ±1.1°C.) shear strength test shall be in accordance with 4.5.5. with the added requirement that a suitable oven or furnace shall be provided to maintain

the specimens at the specified test temperature (see 4.3.3 and table I). Six specimens selected as prescribed in 4.5.5.1 shall be tested for tensile shear strength at 180° F (82° C) for the elevated shear test listed in table I (test No. 4). The average and minimum shear strength of each set of specimens tested shall equal or exceed that specified in the applicable test of table I. Retest provisions shall be as specified in 4.5.5.1.

4.5.5.3 Low temperature tensile shear test (tests Nos. 3 and 5 of table I). The low temperature tensile shear test shall be in accordance with 4.5.5.1 with the added requirement that a suitable chamber shall be provided for maintaining the specimen at -67° ±5° F. (-55° ±2.8° C.) (see 4.3.4). Six specimens selected as specified in 4.5.5.1 shall be tested for tensile shear strength at -67° ± 5° F. (-55° ±2.8° C.). The average and minimum shear strength of these specimens shall equal or exceed that specified for tests Nos. 3 and 5 in table I. Like failure in the retest shall cause rejection of the adhesive.

4.5.5.4 Normal temperature fatigue strength test (test No. 8 of table I). This test shall be performed in accordance with the general provisions of Method 1061 of Federal Test Method Std. No. 175. Specimens having 3/8-inch overlap (see 4.4.1.2) shall have cyclic axial loads applied by a testing machine at a rate not to exceed 3,600 cycles per minute. The specimens shall be held tightly and in alignment as the load is applied by suitable grips, and these grips shall extend to within 1 ±1/8 inch from the edge of the lap joint. The applied cyclic load shall always be in tension and shall range from the maximum selected to 10 percent of the maximum. The loads shall be accurate to ±1 percent. Length and width of the shear area shall be measured to the nearest 0.01 inch and shall be recorded. The test shall be run until the specimen fails or until the maximum required number of repeated stresses have been applied (see 4.5.5.4.1). The number of cycles to failure shall be recorded. The nature and percent of failure, such as cohesive failure (failure within the adhesive), adhesion failure (adhesive pulling from metal), contact failure (lack of complete adhesive-to-metal contact), or tensile metal failure, and the adhesive thickness shall be recorded for each specimen. Adhesive thickness shall be micrometer thickness, measured to the nearest 0.001 inch, of the overall thickness of the lap joint less the combined micrometer thickness of the individual pieces of surface-treated metal, or the adhesive thickness can be measured with a traveling comparator microscope.

4.5.5.4.1 From each panel prepared as specified in 4.4.1.2, two properly identified control specimens shall be taken, one from the center and one from the end, and these specimens shall be subjected to the normal temperature shear test specified in 4.5.5.1. The normal temperature shear strength results obtained on these fatigue control specimens with 3/8-inch overlap shall be reported with the fatigue data. A total of 15 specimens, 5 from each panel, shall be tested in fatigue using maximum selected loads such that failures occur, with approximately regular spacing over a range from 10,000 to 10,000,000 cycles.

Note. The number of cycles of testing to failure at the upper end of the range (10 million) may be reduced, in order to simplify the testing procedure, to 1 million cycles providing the applicable fatigue strength, as determined, conforms to test No. 8 of table I.

The number of cycles to failures and corresponding loads calculated in pounds per square inch, shall be recorded on stress-log cycle coordinates and a smooth curve drawn. The point at which the smooth curve intercepts the 10-million cycle ordinate or 1-million cycle ordinate (see note above), is the fatigue strength. This fatigue strength shall equal or exceed that specified for test No. 8 in table I. If the fatigue strength value falls below that specified, another set of 6 specimens shall be prepared and tested, each with a 600-pound-per-square-inch maximum alternating stress. If any one of these specimens fails to conform to the 10-million cycle requirement, the adhesive shall be rejected.

4.5.5.5 Normal temperature creep-rupture test (test No. 6 of table I). The lap joint specimens (see 4.4) shall be tested in a deadweight loading test apparatus capable of applying loads accurate within 1 percent. The specimens shall be gripped or suspended by means of 0.250-inch-diameter pins placed through drilled holes in the ends of specimens as shown in figure 3. The drilled hole shall be centered (±0.01 inch) in the width of the specimen and placed with its center 1 inch from the end of the specimen. Care must be exercised to avoid eccentricity in the loading of the adhesive joint. The entire assembly of specimen and loading mechanism must be checked for alignment prior to test. Long pull rods will facilitate obtaining proper alignment. Specimens shall remain loaded with a 1,600-pound-per-square-inch stress until rupture occurs or until the stress has been applied for 200 hours. The length and width of the shear area shall be measured to the nearest 0.01 inch and shall be recorded. The specimen bond areas shall be calculated to the nearest 0.01 square inch. Creep shall be measured during test in accordance with 4.5.5.7. The time to failure and the amount of creep of each specimen shall be recorded, as well as the nature and percent of joint failure, if any, and the adhesive film thickness. The type of failure shall be determined and the adhesive film thickness measured as specified in 4.5.5.1 and 4.5.5.4. Six specimens, selected as specified in 4.5.5.1, shall be tested at the 1,600-pound-per-square-inch stress. If one or more of these specimens fails the 200-hour test No. 6 of table I, another set of specimens shall be selected and tested. If any one of these retest specimens fails the test, the adhesive shall be rejected.

4.5.5.6 Elevated temperature creep-rupture test (test No. 7 of table I). The 180°±2° F. (83°±1.1°C.) creep-rupture test shall be in accordance with 4.5.5.5, with the added requirement that a suitable furnace or oven, which does not influence the application of load, shall be provided to maintain the temperature as required. Creep shall be measured on the specimen under stress in accordance with 4.5.5.8.

Six specimens, selected as specified in 4.5.5.1, shall be tested with a 300-pound-per-square-inch stress. If one or more of these specimens fails the 200 hour test No. 7 of table I, 6 more specimens (2 specimens from each of the 3 adhesive batches) shall be tested as a retest. Like failure in the retest shall cause rejection of the adhesive.

4.5.5.7 Normal temperature total creep deformation. As a part of the creep-rupture tests specified in 4.5.5.5, measurements of total deformation (including that due to initial loading) shall be made while the specimen is under stress. The deformation shall be measured to an accuracy of 0.0001 inch at such intervals of time that a smooth time deformation curve may be plotted. The exact time intervals will depend upon the adhesive being tested and the creep rate of the joint. The deformation may be measured directly by observing the displacement of the scribe lines across both edges of the specimen near each end and at the center of the lap joint (figure 3), using a traveling comparator microscope capable of measuring displacement, as required, to the nearest 0.0001 inch or an equivalent measuring apparatus. The deformation of each specimen shall be determined by averaging the deformation measurements at the six prescribed points on the joint. If an extensometer is used, the gage length multiplied by a value equal to the stress in the metal, divided by modulus of the metal used (10.5 times 10^6 pounds per square inch for aluminum alloy) shall be subtracted from all extensometer readings. The average total deformation of the 6 specimens at 200 hours shall be no greater than the maximum deformations specified in table I. All measurements shall be reported. Rejection and retest provisions shall be as specified in 4.5.5.6.

4.5.5.8 Elevated temperature total creep deformation. The elevated temperature total deformation tests shall be made during the elevated temperature creep-rupture tests, 4.5.5.6. The procedure for deformation measurements shall be as specified in 4.5.5.7, except that the testing temperature shall be 180° ±5° F. (82° ±2.8° C.) (see 4.5.5.2), as required in table I. Care shall be taken to insure that these temperatures have no effects on the accuracy of the method of measuring the deformation. Rejection and retest provisions shall be as specified in 4.5.5.6.

4.5.5.9 Tensile shear after salt spray, accelerated weathering and fluid exposure (tests Nos. 9 through 11 of table I). The partial panels (figure 1) which have been exposed to salt spray conditions, accelerated weathering or immersed in fluids as specified in 4.3.5, 4.3.6 and 4.3.7 shall each be cut into four individual specimens as shown in figure 1. The cutting and marking of these specimens shall be done as specified in 4.4. Two specimens randomly selected from each panel (3 panels per exposure condition), 1 panel being prepared with each of the three batches of adhesive (4.4.1.3), shall be tested for shear strength at normal temperatures (tests Nos. 9, 10, and 11 of table I) following the procedures specified in 4.5.5.1. Tests shall be made immediately after removal from the exposure condition. The strengths of the specimens tested at each condition shall equal or exceed that specified in tests Nos. 9 through 11 of table I, as applicable. If original test set fails in this regard, another

group of test panels may be exposed at the particular condition at which the quality was found to be less than that required. Six specimens shall be tested as retest. Like failure in the retest shall cause rejection of the adhesive.

4.5.5.10 Cleavage strength. Cleavage strength of the adhesive shall be determined by testing at least three specimens in accordance with ASTM Method D1062-51. The results shall be recorded in pounds.

4.5.5.11 Storage life tests. One pint package of liquid adhesives, or equivalent amount properly packaged (see 5.1), if of another form, of each of the 3 batches of adhesive being submitted for qualification under this specification shall be stored under temperature and time conditions specific in 3.3.3. At the ends of the respective storage periods, these samples shall be used in the preparation of bonded lap joint panels as required by tests Nos. 1, 2, 4, and 9 of table I, which are applicable to the particular type of adhesive being submitted. These samples shall also be used in the tests for application life. Six specimens, 2 specimens from each of the 3 adhesive batches, shall be tested at each of the applicable test conditions, except for test No. 9 for which 1 partial panel (figure 1) from each of the 3 adhesive batches shall be exposed and tested. The strength of these specimens shall equal or exceed that specified for the applicable tests in table I. If the original test set fails in this regard, another set of specimens may be prepared with the remainder of the sample and tested. Like failure in the retest shall cause rejection of the adhesive or a modification of maximum storage life statement as furnished by the adhesive manufacturer. (See 3.3.3 and 6.4.4.)

4.6 Quality conformance tests.

4.6.1 Sampling.

4.6.1.1 Adhesive. A single sample of not less than 2 quarts of liquid adhesive or an equivalent amount in weight or measure, if of another form, shall be taken at random from each lot and tested. Each sample shall be divided into two equal parts; one part shall be available for required acceptance tests and the other part shall be retained for retests, if necessary. The storage condition for the retained sample shall be that recommended by the adhesive manufacturer (see 3.3.3), and samples shall not be retained beyond the storage life, as recommended by the adhesive manufacturer. Additional samples may be taken if considered necessary to determine conformance of the product to this specification.

4.6.1.2 Filled containers. A random sample of filled containers shall be selected from each lot in accordance with MIL-STD-105 at inspection level I, and at acceptable quality level (AQL) of 2.5 percent defective, to verify conformance to all requirements of this specification regarding fill, closure, and marking.

4.6.2 Lot. A lot shall consist of 500 pounds or fraction thereof of adhesive of one type (and form, if applicable), manufactured at one time in one batch, forming part of one contract or order, and submitted for inspection at the same time and place. A batch shall be defined as that quantity of material which has been manufactured at one time or subjected to some unit chemical or physical mixing process intended to make the final product homogeneous.

4.6.3 Tests. Samples of each submitted lot of adhesive delivered on contract or order shall be subjected to the following quality conformance tests. Test reports, in duplicate, shall be furnished for all quality conformance tests specified in this specification, and shall be signed by an authorized representative of the laboratory making the tests. Acceptance or approval of material during course of manufacture shall in no case be construed as a guaranty of the acceptance of the finished products.

4.6.3.1 Examination of product. The adhesive shall be examined to determine conformance with the requirements of this specification for which no test is listed herein.

4.6.3.2 Application life (types I and II).

4.6.3.2.1 Apparatus. The apparatus shall consist of a Brookfield Synchrolectric Viscometer, (Model HBF, Volts 110, Freq.--60), or approved equivalent. It shall be mounted on a platform which is attached to stand in such a manner that the viscometer is lowered at the rate of 1 inch per minute by means of a motor-driven buttress-type screw. A spindle, attached to the viscometer, bears a notch and disc on its shaft. The notch indicates the depth of penetration. A beaker, (200 ml, 5 inches tall, 2-1/4 inches diameter), shall serve to weigh and mix the base adhesive with the accelerator and suspend it in a cold bath. The cold bath shall serve as the source of refrigeration. The temperature of the bath 50° ±2° F. (10° ±1.1° C.) shall be used to maintain the thermal equilibrium 66° ±2° F. (19° ±1.1° C.) of the adhesive during the test period.

4.6.3.2.2 Procedure. One hundred seventy five grams of the epoxy resin shall be weighed in the beaker, and suspended in a cold bath to bring the base adhesive temperature to 55° ±2° F.(13° ±1.1° C.). An accurately weighed portion of accelerator, as specified by the adhesive manufacturer, shall be thoroughly mixed, in small portions, with the refrigerated epoxy resin for 15 minutes. Readings shall be taken every 30 minutes until a viscosity of 160,000 centipoises is reached to determine compliance with paragraph 3.3.1.

4.6.3.3 Normal temperature tensile shear test (acceptance). The normal temperature tensile shear test shall be in accordance with 4.5.5.1. Two panels as shown in figure 2 (except the panel width shall be 6 inches instead of 9 inches) or two panels as shown in figure 4 shall be prepared. The cleaning and bonding of these panels shall be done in accordance with the approved manufacturer's

instructions. All available specimens therefrom shall be tested. The average normal temperature shear strength value shall equal or exceed the applicable acceptance requirements of this specification or the process specification prepared by the processing activity in accordance with MIL-A-9067, whichever is higher.

4.6.3.4 Elevated temperature tensile shear test (acceptance, type III). The elevated temperature tensile shear tests shall be in accordance with 4.5.5.2. Two panels as specified in 4.6.3.3 shall be prepared for test No. 4 of table I applicable to the type III adhesive. All available specimens therefrom shall be tested. The respective average test values shall be equal to or exceed the applicable acceptance requirements of this specification or the process specification prepared by the processing activity in accordance with MIL-A-9067, whichever is higher.

4.6.3.5 Examination of filled containers. Each sample-filled container, selected in accordance with 4.6.1.2, shall be examined for defects of the container and closure for evidence of leakage, and for unsatisfactory markings. Each sample-filled container shall also be weighed to determine the amount of the contents. Any container in the sample having one or more defects or under required fill, shall be rejected, and if the number of defective containers in any sample exceeds the acceptance number for the specified sampling plan of MIL-STD-105, the lot represented by the sample shall be rejected.

4.6.4 Rejection criteria. If the results of the quality conformance tests show failure to conform to 4.6.3 the lot shall be rejected.

4.7 Inspection of preparation for delivery.

4.7.1 Quality conformance inspection of pack.

4.7.1.1 Unit of product. For the purpose of inspection, a completed pack prepared for shipment shall be considered a unit of product.

4.7.1.2 Sampling. Sampling for examination shall be in accordance with MIL-STD-105.

4.7.1.3 Examination. Samples selected in accordance with 4.7.1.2 shall be examined for the following defects. AQL shall be 2.5 percent defective.

101. Materials, methods and containers not as specified for level A or B. Each incorrect material, method or container shall constitute one defect.

102. Boxes not waterproofed as specified for level A.

103. Two component systems not containerized as a kit.

104. Strapping not zinc coated for level A.

105. Marking missing, illegible, incomplete or incorrect for level A, B, or C.

5. PREPARATION FOR DELIVERY

5.1 Packaging. Packaging shall be level A, B, or C, as specified (see 6.3).

5.1.1 Level A.

5.1.1.1 Liquid adhesives.

5.1.1.1.1 Unit packaging. Liquid adhesives shall be packaged in cans conforming to requirements of PPP-C-96, type V, class 2. Cans shall be the U.S. standard pint, quart, or gallon size, as specified (see 6.3).

5.1.1.1.2 Intermediate packaging. Liquid adhesives packaged as specified in 5.1.1.1.1 shall be intermediate packaged in accordance with requirements in the appendix of PPP-C-96, with containers conforming to the requirements of PPP-B-63($V3_c$ and shall be within the weight limitations specified for the container.

5.1.1.2 Film adhesives.

5.1.1.2.1 Unit packaging. Film adhesives, in roll form of size as specified (see 6.3) shall be wrapped in a suitable release paper and individually packaged in a box conforming to requirements of PPP-B-636, $W6_c$ or $W6_s$ or PPP-B-566, variety 4, style, type and class optional. Each box shall be waterproofed as specifie for the weatherproofing of slotted boxes in accordance with the appendix of PPP-B-636. The film adhesive is to be supplied in rolls of specified width (inches), length (feet), and thickness (mils).

5.1.1.2.2 Intermediate packaging. Rolls of film adhesive, packaged as specified in 5.1.1.2.1 shall be intermediate packaged in quantities of 12 rolls (see 6. in boxes conforming to requirements of PPP-B-636, $V3_c$.

5.1.1.3 Adhesives with curing agents or solvents.

5.1.1.3.1 Unit packaging. When two adhesive components are necessary as a unit, the components shall be packaged as a kit, in boxes sealed and waterproofed as specified in 5.1.1.2.1.

5.1.1.3.2 Intermediate packaging. Components of kits, packaged as specified in 5.1.1.3.1 shall be intermediate packaged in quantities of 4, 6, or 12 kits, as specified in 5.1.1.2.2.

5.1.2 Level B. (Civil Agencies). Packaging for level B shall be as in 5.1.1 except that boxes conforming to PPP-B-665 or PPP-B-676 may also be used, and the boxes conforming to PPP-B-636 shall be class domestic (see 6.3).

5.1.3 Level C. The adhesive, liquid or film, shall be packaged to afford protection against deterioration and damage from the supplier to the initial destination for immediate use. When two adhesive components are necessary as a unit, the components shall be packaged as a kit. The supplier shall use his commercial practice providing it fulfills the requirements for this level.

5.2 Packing.

5.2.1 Level A.

5.2.1.1 Adhesives. Adhesives, intermediate packaged as specified in 5.1.1.1.2 or 5.1.1.2.2 shall be packed in wood cleated plywood boxes conconforming to requirements of PPP-B-601, overseas type, style optional in quantities not to exceed the weight limitation of the container. Box closur and strapping shall be in accordance with the appendix to the box specification. Strapping shall be zinc coated.

5.2.2 Level B. Adhesive, intermediate packaged as specified in 5.1.1.1.2 or 5.1.1.2.2 shall be shipped directly in the intermediate contain no additional overpack is necessary. Boxes shall be strapped in accordance with requirements in the appendix to PPP-B-636.

5.2.3 Level C. Adhesive, packaged as specified in 5.1 shall be packed to assure carrier acceptance and safe delivery to destination at lowest rating in conformance to requirements of Uniform Freight Classification or National Motor Freight Classification.

5.3 Marking.

5.3.1 Civil agencies. Interior and exterior containers shall be marked in accordance with Federal Standard No. 123. Exterior containers shall be marked

with date of manufacture of contents, by month and year, not by code, and shall be marked with a note relative to storage, such as:

> "Adhesives conforming to this specification shall be stored at a temperature of less than 86° F. (30° C.) in the absence of direct sunlight. If transit or normal storage conditions, or both, necessitate exposure of the adhesive to temperatures in excess of 86° F. (30 °C.) the life of the adhesive will be proportionally reduced."

5.3.2 Military agencies. Interior and exterior containers shall be marked in accordance with MIL-STD-129. Exterior containers shall be marked with date of contents, by month and year, not by code, and shall also be marked with a note relative to storage, such as:

> "Adhesives conforming to this specification shall be stored at a temperature of less than 86° F. (30° C.) in the absence of direct sunlight. If transit or normal storage conditions, or both, necessitate exposure of the adhesive to temperatures in excess of 86° F. (30° C.) the life of the adhesive will be proportionally reduced."

5.3.3 Special markings. In addition to marking specified in 5.3.1 and 5.3.2 and the contract or purchase order, each multi-component kit (see 5.1.1 shall be marked with the net volume or net weight of the total adhesive contents, an each component of the kit shall be marked to identify the component and show its net volume or weight as applicable (see 5.1.1).

6. NOTES

6.1 Intended use. Adhesives conforming to this specification are intended for use in the structural bonding of metal to metal parts of aircraft to produce high strength joints when cured under specified conditions. The adhesives are intended principally for use on clad aluminum alloys. Parts or assemblies requiring the use of adhesives covered by this specification should be designed with consideration for the heat and pressure required during the bonding operations The maximum curing pressure specified in 3.3.2.2 is a necessary requirement for determining the suitability of an adhesive for general production use; however, shop facilities permitting higher pressures in accordance with the manufacturer's instructions may be used wherever practicable.

6.1.1 The adhesives covered by this specification are also suitable for bonding other constructions including wood, glass, phenolic, polyester and epoxy resin laminates to each other or in combination.

6.1.2 Designers are cautioned that shear strength values specified herein are based on tests performed with clad aluminum alloy. For use with other materials, strength values of the adhesive shall be further investigated.

6.1.3 Adhesives covered by this specification are not intended for use in bonding sandwich constructions unless they conform to MIL-A-25463.

6.2 Suitability for use with explosives. When suitability for use with a particular explosive is required, a special test shall be conducted at a designated Government laboratory to determine compliance of the adhesive in this respect. The procuring activity shall request this test to be conducted, shall specify the particular explosive to be used and designate the qualifying laboratory.

6.3 Ordering data. Purchasers should exercise any desired options offered herein and procurement documents should specify the following:

(a) Title, number, and date of this specification

(b) Type of adhesive (see 1.2), adhesive code number (see 3.2.8.1)

(c) Form of adhesive required (see 3.2)

(d) Amounts and unit quantities of adhesives required (see 5.1.1)

(e) Quantity of liquid adhesives in cans

(f) Length, width, and thickness of film adhesive

(g) When components shall be packaged as a kit

(h) Number of kits to be packed in intermediate pack (see 5.1.1.3.2)

(i) Level of packaging and packing required (see 5.1 and 5.2)

6.4 Qualification testing.

6.4.1 Qualification. With respect to products requiring qualification, awards will be made only for products which are at the time set for opening of bids, qualified for inclusion in the applicable Qualified Products List whether or not such products have actually been so listed by that date. The attention of the suppliers is called to this requirement, and manufacturers are urged to arrange to have the products that they propose to offer to the Federal Government, tested for qualification in order that they may be eligible to be awarded contracts or orders for the products covered by this specification. The activity responsible for the Qualified Products List is the Naval Air Systems Command, Washington, D.C. 20360; however, information pertaining to qualification of products may be obtained from the Director, Aero Materials Department, Naval Air Development Center, Johnsville, Warminster, Pennsylvania 18974.

6.4.2 In authorizing qualification tests, it should be stated in the Letter of Authorization that the following information and samples should be furnishe at no cost to the Government.

(a) Notarized test report (4.5.3) listing all data obtained with three separate batches of the adhesive in evaluation tests performed in accordance with this specification.

(b) A duplicate set of bonded test panels prepared with the same three batches of adhesive and under the same bonding conditions as used to obtain the data given in the test report. Twelve lap-joint panels (11 with a 1/2-inch overlap and one with a 3/8-inch overlap), with each of the three batches of adhesive will be required. (see 4.4, 4.4.1, and 4.5.2 for panel preparation and identification of panels with adhesive batch.)

(c) Instruction sheet (4.5.4) listing all of the information as required in 3.5 and including storage life recommendations (3.3.3).

(d) Four 1-pint samples of liquid adhesive together with necessary curing agents, or an equivalent amount of material in weight and measure if of another form, from each of three different batches of adhesives. These adhesive samples shall be from batches of recent production scale manufacture and may be from different batches from those used in preparing the above test panels. These samples should each be properly packaged for storag (see section 5) and shall be properly identified (see 4.5.2).

(e) If the recommended method of preparing the metal surface for bonding required the use of chemicals other than standard commercial acids, solvents, or sodium chromate, the manufacturer shall include enough of such chemicals to make 2 gallons of solution.

(f) The manufacturer shall pay the transportation charges to and from the designated point where tests are to be made. In the case of failure of the sample or samples submitted, consideration will be given to the request of the manufacturer for additional test only after it has been clearly shown that changes have been made in the product which the Government considers sufficient to warrant additional tests.

6.4.3 Applications for tests of suitability for use with explosives, may be made to the Commanding Officer, Picatinny Arsenal, Dover, New Jersey, Attention: Samuel Feltman Ammunition Laboratories, Ordnance Corps, Plastic Laboratory.

6.4.4 Adhesives conforming to the other requirements of this specification may, at the option of the qualifying activity, be placed on the Qualified Products list of products qualified under MMM-A-134 (see 6.4.1) prior to the completion of the storage life tests. Modifications of the manufacturer's storage life recommendations or removal of the adhesive from the Qualified Products List will be necessary, if subsequently the adhesive does not pass the storage life test.

MILITARY INTEREST:

Custodians:
Army - MR
Navy - AS
Air Force - 11

Review activities:
Army - MI, MR, AV, EL, GL, ME, MU, WC
Navy - AS
Air Force - 84, 85

User activities:
Navy - YD, CG, SH, OS

CIVIL AGENCIES INTEREST:
GSA - FSS
JUS
HEW
COM-NBS
AGR
VA-DMS

Preparing activity:
Navy - AS

Orders for this publication are to be placed with General Services Administration, acting as an agent for the Superintendent of Documents. See section 2 of this specification to botain extra copies and other documents referenced herein. Price 25 cents each.

INSTRUCTIONS: In a continuing effort to make our standardization documents better, the DoD provides this form for use in submitting comments and suggestions for improvements. All users of military standardization documents are invited to provide suggestions. This form may be detached, folded along the lines indicated, taped along the loose edge *(DO NOT STAPLE)*, and mailed. In block 5, be as specific as possible about particular problem areas such as wording which required interpretation, was too rigid, restrictive, loose, ambiguous, or was incompatible, and give proposed wording changes which would alleviate the problems. Enter in block 6 any remarks not related to a specific paragraph of the document. If block 7 is filled out, an acknowledgement will be mailed to you within 30 days to let you know that your comments were received and are being considered.

NOTE: This form may not be used to request copies of documents, nor to request waivers, deviations, or clarification of specification requirements on current contracts. Comments submitted on this form do not constitute or imply authorization to waive any portion of the referenced document*(s)* or to amend contractual requirements.

(Fold along this line)

(Fold along this line)

DEPARTMENT OF THE NAVY

NO POSTAGE NECESSARY IF MAILED IN THE UNITED STATES

OFFICIAL BUSINESS
PENALTY FOR PRIVATE USE $300

BUSINESS REPLY MAIL
FIRST CLASS PERMIT NO. 12503 WASHINGTON D. C.

POSTAGE WILL BE PAID BY THE DEPARTMENT OF THE NAVY

COMMANDER
NAVAL AIR SYSTEM COMMAND
ENGINEERING DIVISION
STANDARDIZATION SECTION
CODE: AIR 52021
DEPARTMENT OF THE NAVY
WASHINGTON, DC 20361

STANDARDIZATION DOCUMENT IMPROVEMENT PROPOSAL

(See Instructions – Reverse Side)

1. DOCUMENT NUMBER

2. DOCUMENT TITLE

3. NAME OF SUBMITTING ORGANIZATION

4. TYPE OF ORGANIZATION *(Mark one)*

- ☐ VENDOR
- ☐ USER
- ☐ MANUFACTURER
- ☐ OTHER *(Specify)*: _____

5. ADDRESS *(Street, City, State, ZIP Code)*

6. PROBLEM AREAS

a. Paragraph Number and Wording:

b. Recommended Wording:

c. Reason/Rationale for Recommendation:

7. REMARKS

8a. NAME OF SUBMITTER *(Last, First, MI)* – Optional

b. WORK TELEPHONE NUMBER *(Include Area Code – Optional)*

9. MAILING ADDRESS *(Street, City, State, ZIP Code)* – Optional

8. DATE OF SUBMISSION *(YYMMDD)*

DD FORM 1426 PREVIOUS EDITION IS OBSOLETE.