L-P-516a
March 21, 1967

SUPERSEDING
Int. Fed. Spec. L-P-00516 (GSA-FSS)
October 16, 1964
(See 6.3)

FEDERAL SPECIFICATION

PLASTIC SHEET AND PLASTIC ROD, THERMOSETTING, CAST

This specification was approved by the Commissioner, Federal Supply Service, General Services Administration, for the use of all Federal agencies.

1. SCOPE AND CLASSIFICATION

1.1 Scope. This specification covers the requirements for thermosetting resins cast from monomers or from partly polymerized material into sheets, rods, tubes, and other forms, for use in military equipment.

1.2 Classification.

1.2.1 *Types.* The thermosetting resins covered by this specification shall be of the following types, as specified (see 6.2):

G-1 (alkyd copolymer)—General usage (see 6.1.1).

G-3 (allyl)—General usage (see 6.1.2).

E-2 (cross-linked styrene copolymer)—Ultrahigh-frequency usage (see 6.1.3).

M-1 (cast phenolic)—Mechanical usage (see 6.1.4).

2. APPLICABLE DOCUMENTS

2.1 The following specifications and standards, of the issues in effect on date of invitation for bids or request for proposal, form a part of this specification to the extent specified herein:

Federal Specifications:

PPP-B-585—Boxes, Wood, Wirebound.

PPP-B-591—Boxes, Fiberboard, Wood-Cleated.

PPP-B-601—Boxes, Wood, Cleated-Plywood.

PPP-B-621—Boxes, Wood, Nailed and Lock-Corner.

PPP-B-636—Box, Fiberboard.

PPP-B-640—Boxes, Fiberboard, Corrugated, Triple-Wall.

Federal Standards:

Fed. Std. No. 123—Marking for Domestic Shipment (Civilian Agencies).

Fed. Test Method Std. No. 406—Plastics: Methods of Testing.

(Activities outside the Federal Government may obtain copies of Federal Specifications, Standards, and Handbooks as outlined under General Information in the Index of Federal Specifications and Standards and at the prices indicated in the Index. The Index, which includes cumulative monthly supplements as issued, is for sale on a subscription basis by the Superintendent of Documents, U. S. Government Printing Office, Washington, D. C. 20402.

(Single copies of this specification and other product specifications required by activities outside the Federal Government for bidding purposes are available without charge at the General Services Administration Regional Offices in Boston, New York, Washington, D.C., Atlanta, Chicago, Kansas City, Mo., Dallas, Denver, San Francisco, Los Angeles, and Seattle, Wash.

(Federal Government activities may obtain copies of Federal Specifications, Standards, and Handbooks and the Index of Federal Specifications and Standards from established distribution points in their agencies.)

Military Specification:

MIL-P-116—Preservation, Methods of.

Military Standards:

MIL-STD-105—Sampling Procedures and Tables for Inspection by Attributes.

MIL-STD-129—Marking for Shipment and Storage.

(Copies of Military Specifications and Standards required by contractors in connection with specific procurement functons should be obtained from the procuring activity or as directed by the contracting officer.)

3. REQUIREMENTS

3.1 Material. The material shall be cast thermosetting resins so formulated and processed as to meet the requirements of this specification.

3.1.1 *Clarity.* The material shall be colorless, transparent, translucent, or opaque, as specified (see 6.2).

3.1.2 *Form.* The material shall be sheets, rods, tubes, or other forms, as specified, with the dimensions specified (see 6.2).

3.1.2.1 *Dimensional tolerance on sheets.*

3.1.2.1.1 *Length and width.* The length and width of untrimmed sheets may vary 1 inch over or under the manufacturer's standard size. The length and width of trimmed sheets shall be within plus 0.250, minus 0.000-inch of the nominal size. Measurements to determine length and width shall be made at 23° ± 5° C.

3.1.2.1.2 *Thickness.* Permissible variations from standard thickness shall be as follows:

Size of sheet (inches)	Tolerance (percent)
Up to 12 by 24	± 10
Over 12 by 24	± 15

At least 90 percent of the area of the sheet shall be within these variations, and the thickness as measured at any one point shall not vary from the normal by a value greater than 125 percent of the specified variation.

3.1.2.2 *Dimensional tolerance on rods and tubes.* The tolerance on rods and tubes shall be as follows:

Dimension	Tolerance
Length	± 1 inch
Diameter	± 5 percent
Wall thickness	± 15 percent

3.1.3 *Appearance and workmanship.* The material shall be free from foreign matter; shall not have any cracks, breaks, bubbles, wrinkles, scratches, dents, or ragged edges; and shall be clean cut.

3.2 Property values. When specimens are tested as specified herein, the values obtained from each set of specimens for a specific property, after each conditioning procedure specified in table I, shall be averaged, and the results so obtained shall meet the required values specified in table I.

4. QUALITY ASSURANCE PROVISIONS

4.1 Responsibility for inspection. Unless otherwise specified in the contract or purchase order, the supplier is responsible for the performance of all inspection requirements as specified herein. Except as otherwise specified, the supplier may utilize his own facilities or any commercial laboratory acceptable to the Government. The Government reserves the right to perform any of the inspections set forth in the specification, where such inspections are deemed necessary to assure that supplies and services conform to prescribed requirements.

4.2 Sampling for quality conformance inspection. Sampling for quality conformance inspection shall be performed in accordance with the provisions set forth in MIL-STD-105, except where otherwise indicated hereinafter. For purpose of sampling, an inspection lot for inspection and tests shall consist of all material of the same type, form, thickness, and diameter manufactured at one time.

4.3 Quality conformance inspection.

4.3.1 *Inspection of the end item.*

4.3.1.1 *Examination of the end item.* Examination of the end item shall be made in accordance with the classification of defects, inspection levels, and acceptable quality levels (AQLs) set forth. The lot size, for purpose of determining the sample size in

Table I. *Property values for cast thermosetting forms*

Property to be tested	Fed. Test Method Std. No. 406, method No.	Modified by paragraph	Conditioning procedure (see 4.4.2.3)	Value required			
				Type G-1	Type G-3	Type E-2	Type M-1
Water absorption, maximum, percent	7031	4.4.3.1	(See 4.4.3.1)	1.00	0.30	0.08	1.00
Dielectric strength (flatwise), minimum, volts per mil:	4031	4.4.3.2					
Short-time test	4031	4.4.3.2.1	A	----	350	350	----
Step-by-step test	4031	4.4.3.2.2	A	----	275	275	----
Dielectric breakdown, minimum, kilovolts:	4031	4.4.3.3					
Short-time test	4031	4.4.3.3.1	A	----	45	45	----
Step-by-step test	4031	4.4.3.3.2	A	----	40	40	----
Dielectric constant, maximum:	4021	----					
At 1 kilocycle	----	----	A	----	4.30	2.70	----
			D-48/50+D-½/23	----	5.00	2.70	----
At 1 megacycle	----	----	A	3.5	4.30	2.70	----
			D-48/50+D-½/23	----	5.00	2.70	----
At 30 megacycles	----	----	A	----	----	2.70	----
			D-48/50+D-½/23	----	----	2.70	----
Dissipation factor, maximum:							
At 1 kilocycle	----	----	A	----	0.020	0.0010	----
			D-48/50+D-½/23	----	.030	.0025	----
At 1 megacycle			A	0.035	.060	.0010	----
			D-48/50+D-½/23	----	.080	.0025	----
At 30 megacycles	----	----	A	----	----	.0010	----
			D-48/50+D-½/23	----	----	.0025	----
Tensile strength, minmium, pounds per square inch	1011	----	A	6,200	----	----	3,500
Compressive strength, minimum, pounds per square inch	1021	----	A	----	----	----	7,000
Flexural strength (flatwise), minimum, pounds per square inch	1031	----	A	12,500	6,500	9,000	7,000
			E-1/75	6,500	1,000	----	----
Deflection temperature under load, minimum, degrees centigrade	2011	----	A	100	65	100	50
Flammability, maximum, inches per minute	2021	----	A	----	0.75	2.5	----

accordance with MIL-STD-105, shall be expressed in units of plastic sheets, rods, tubes, or other forms, as specified, for the examinations in 4.3.1.1.1 and 4.3.1.1.2, and in units of shipping containers for the examination in 4.3.1.1.3.

4.3.1.1.1 *Examination of the end item for defects in appearance and workmanship.* The sample unit for the examination specified in table II shall be one plastic sheet, rod, tube, or other form, as specified.

Table II. *Examination of the end item for defects in appearance and workmanship*

Examine	Defects
Form	Not in specified form.
Clarity	Not colorless, transparent, translucent or opaque, as specified.
Appearance and workmanship	Not clean, contains dirt, grit, or other foreign matter.
	Any cracks, breaks, bubbles, wrinkles, scratches, or dents.
	Not clean cut, any ragged edges.

4.3.1.1.2 *Examination of the end item for dimensional defects.* The sample unit for the examination specified in table III shall be one plastic sheet, rod, or tube.

Table III. *Examination of the end item for dimensional defects*

Examine	Defects
Length and width, (trimmed sheets)	Any dimension that varies by more than minus 0 or plus 1/4 inch.
Length and width, (untrimmed sheets)	Varies by more than plus or minus 1 inch from the manufacturer's standard size.
Thickness	Varies by more than plus or minus the tolerance specified, (see 3.1.2.1.2).
	Note: Ten thickness determinations randomly scattered throughout the sheet shall be made. In order to comply, at least 9 determinations shall be within the specified tolerances and not more than one determination shall vary from the standard thickness by more than 125 percent of the specified tolerances, (see 3.1.2.1.2).
Rods and tubes — Length, diameter, and wall thickness, (as specified)	Varies by more than plus or minus the tolerance specified, (see 3.1.2.2).

4.3.1.1.3 *Examination of preparation for delivery.* An examination shall be made in accordance with table IV to determine that packaging, packing, and markings comply with the requirements of section 5. The sample unit for this examination shall be one shipping container, fully packed, selected just prior to closing operation. Shipping containers fully prepared for delivery shall be examined for closure defects.

Table IV. *Preparation for delivery*

Examine	Defects
Packaging	Individual sheets, rods, or tubes not packaged as specified.
	Packaging material not as specified.
	Not level specified, not in accordance with contract requirements.
Packing	Not in accordance with contract requirements.
	Container not as specified; closures not accomplished by specified or required methods or materials.
	Any nonconforming component, component missing, damaged, or otherwise defective, affecting serviceability.
	Inadequate application of components such as incomplete closure of case liners, container flaps, loose or inadequate strapping, bulged or distorted containers.
Count	Less than specified or indicated quantity.
Marking	Interior or exterior markings (as applicable), omitted, illegible, incorrect, incomplete or not in accordance with contract requirements.
Weight	Gross or net weight exceeds specified requirements.

4.3.1.1.4 *Inspection levels and AQLs for examinations.* The inspection levels for determining the sample size and the AQLs expressed in defects per 100 units shall be as follows:

Examination paragraph	Inspection level	AQL
4.3.1.1.1	I	1.5
4.3.1.1.2	S-2	2.5
4.3.1.1.3	S-2	4.0

4.3.2 *Testing of the end item.* The end item shall be tested for the applicable properties as indicated in table I from each lot presented for inspection and tests. The lot size shall be expressed in units of sheets, rods, tubes, or other forms, as specified. A test unit shall consist of a unit, portion of unit, or several adjacent units, as required, of sufficient size to conduct all of the required tests, but not less than 75 linear inches for rods and tubes, nor less than 2 square feet for sheets of types G-1 and M-1, nor less than 4 square feet for sheets of types G-3 and E-2, as applicable. Test units shall be randomly selected throughout the lot. Three test units shall be taken from lots up to 500 units, and eight test units from lots of 501 or more units. In addition to the end items, any special casting required as a source of test specimens and prepared as specified in 4.4.2.2.1, shall form a part of the test unit. Failure of any test unit to meet any of the applicable requirements of this specification shall be cause for rejection of the entire lot.

4.4 Test methods.

4.4.1 *Test conditions.* Unless otherwise specified herein, the test specimens shall be conditioned, measured, and tested at 23° ± 1.1° C. (73.5° ± 2° F.), and 50 ± 4 percent relative humidity in accordance with the referenced test methods in Fed. Test Method Std. No. 406. Test equipment and inspection facilities shall be of sufficient accuracy, quality, and quantity to permit performance of the required quality conformance inspection. The manufacturer shall establish adequate calibration of test equipment to the satisfaction of the Government.

4.4.2 *Test specimens.*

4.4.2.1 *Number.* Three specimens per test unit shall be tested for each of the tests described herein. Test reports shall include all values on which the average results are based.

4.4.2.2 *Form and dimensions.* The form and dimensions of the standard test specimens shall be as specified in the applicable method of test.

4.4.2.2.1 *Preparation.* The test specimens shall be cut or machined from the end item and tested in the thickness supplied. Where it is impossible to obtain specimens of the required dimensions for test from the end item, the specimens may be prepared from flat sheets cast at the same time, under as nearly identical conditions as possible, from the same batch of resin used to cast the lot being tested. These castings shall be the same thickness as the end items, with the following exceptions:

(a) Dielectric breakdown tests shall be conducted on 1/2-inch thick material; and all other electrical tests on 1/8-inch thick material.

(b) In the event of dispute, flexural strength and deflection temperature under load specimens shall be 5 by 1/4 by 1/2 inch, and flammability specimens, 5 by 1/8 by 1/2 inch.

4.4.2.2.1.1 Casting of special test sheets and machining of test specimens shall be representative of sound practice. When special test sheets are necessary, three or eight sheets of each required thickness, of sufficient size to provide the requisite number of test specimens, shall be cast to form a part of the individual test units required in 4.3.2. When tests are conducted on items, the amount of material required for tests shall be supplied by the manufacturer in addition to the amount required by the contract or order.

4.4.2.2.2 *Tolerances.* Unless otherwise specified herein, tolerances on dimensions shall be plus or minus 5 percent.

4.4.2.2.3 *Measurements.* Dimensions required to be recorded shall be measured to the nearest 0.001 inch by using a micrometer or vernier caliper. All other dimensions shall be measured to the nearest 1/32 inch. Such measurements shall be made before conditioning in each case and after completion of the test whenever required.

4.4.2.3 *Conditioning.* Specimens shall be conditioned before test as specified in table I.

4.4.2.3.1 *Designation.* The type of conditioning required shall be designated as follows:

Condition:

A—As received; no special conditioning.

D—Immersion conditioning in distilled water.

E—Temperature conditioning.

Des—Desiccation conditioning; cooling over silica gel or calcium chloride in a desiccator at 25° C. for 16 to 20 hours.

4.4.2.3.2 *Procedures.* The conditioning procedure required, with the exception of conditions A and des, shall be indicated by the following combination of symbols:

(a) A capital letter specifying the type of conditioning.

(b) A number indicating in hours the duration of the conditioning.

(c) A number indicating in degrees centigrade the conditioning temperature.

The numbers shall be separated from each other by a slant mark, and from the capital letter by a dash. A sequence of conditions shall be denoted by the use of a plus (+) sign between the successive conditions.

4.4.2.3.3 *Time tolerances.* Conditioning-time tolerances and additional testing information shall be as specified in table V.

4.4.3 *Apparatus and procedure.* The apparatus and procedure shall be as specified in the method of test, and as modified herein.

4.4.3.1 *Water absorption.* The test specimens shall be tested in accordance with procedure A, immersion in water for 24 hours, except that the conditioning period shall be 48 hours at 50° C.

4.4.3.2 *Dielectric strength (flatwise).* The test shall be made under oil at a frequency

Table V. *Conditioning-time tolerances and testing information*

Conditioning procedure 1/	Conditioning-time tolerance			Test temperature, humidity, and tolerances	Remarks
	Oven or air	Hot water	Cool water		
D-48/50 + D-½/23	----	+ 2, -0 hr.	+ 2, -0 hr.		Start test 2 minutes after removing specimens from final conditioning bath.
E-48/50 + des + D-24/23 (for water absorption).	+ 2, -0 hr.	----	+ 2, -0 hr.	23° + 1.1° C., 50 ± 4 percent RH	
E-1/75	+ 1, -0 hr.	----	----	75° + 2° C.	Measure flexural strength without removing specimens from the oven.

1/ After immersion conditioning, surface water shall be removed by wiping the specimen with a damp cloth, followed by wiping with a dry cloth

not exceeding 100 cycles per second. The electrodes shall be metal disks 2 inches in diameter and 1 inch in length with the edges rounded to a radius of 1/4 inch. The test specimens shall be disks, 4 inches in diameter by 1/8 inch in thickness.

4.4.3.2.1 *Short-time test.* The voltage shall be increased uniformly at the rate of 500 volts per second.

4.4.3.2.2 *Step-by-step test.* The voltage shall be increased by the increments specified in table VI. It shall be held at each step for 1 minute and then changed to the next higher one within 10 seconds. This process shall be continued up to failure.

Table VI. *Voltage increment for step-by-step test*

Breakdown by short-time method	Increment
Kilovolts	*Kilovolts*
12.5 or less	0.5
Over 12.5 to 25, incl.	1.0
Over 25 to 50, incl.	2.5
Over 50 to 100, incl.	5.0
Over 100	10.0

4.4.3.3 *Dielectric breakdown.* The test shall be made under oil at a frequency not exceeding 100 cycles per second. Electrodes shall be American Standard No. 3 tapered pins or equivalent. The test potential shall be applied between the pair of electrodes when inserted successively in the numbered holes of the test specimen illustrated in figure 1, and the average of the three readings shall be taken as the reading for the specimen.

4.4.3.3.1 *Short-time test.* The voltage shall be increased uniformly at the rate of 500 volts per second.

4.4.3.3.2 *Step-by-step test.* The voltage shall be increased by the increments specified in table VI. It shall be held at each step for 1 minute and then changed to the next higher one within 10 seconds. This process shall be continued up to failure.

4.4.3.4 *Dielectric constant and dissipation factor.* For tests at 1 kilocycle, a three-electrode system shall be used on specimens 1/8-inch in thickness by either 4 inches in diameter, or 4-inches square. For tests at 1 and 30 megacycles, a micrometer electrode holder shall be used on disk specimens, 2 inches in diameter by 1/8-inch in thickness.

4.4.3.5 *Flexural strength.* From each test unit, two sets of three specimens each shall be tested. One set shall be conditioned and tested in accordance with 4.4.1, and one set shall be conditioned for a period of not less than 1 hour, nor more than 2 hours, at 75° ± 2° C. (167° ± 3.6° F.), in a circulating air oven, and tested at that temperature without removing the specimens from the oven.

4.4.4 *Accuracy of calculations.* Observed or calculated values shall be rounded off to the nearest digit in the last right-hand place of figures used in expressing the specified value, except as follows:

(a) From 500 to 1,000, incl. — to the nearest 5.

(b) From 1,001 to 10,000, incl. — to the nearest 100.

5. PREPARATION FOR DELIVERY

5.1 Preservation and packaging. Preservation and packaging shall be level A or C, as specified (see 6.2).

5.1.1 *Level A.* Plastic sheets and plastic rods and tubes shall be preserved and packaged in accordance with method III of MIL-P-116. Individual sheets shall be covered on both surfaces by a suitably adhered paper that can be readily removed without injury to the surfaces. Rods and tubes shall be individually wrapped or otherwise separated to protect them from abrasion.

5.1.2 *Level C.* Preservation and packaging shall be sufficient to afford adequate protection against deterioration and physical damage during shipment from the supply source to the first receiving activity for immediate use. This level may conform to

the supplier's commercial practice when such meets the requirements of this level.

5.2 **Packing.** Packing shall be level A, B, or C, as specified (see 6.2).

5.2.1 *Level A.*

5.2.1.1 *Plastic sheets.* Two, five, or ten plastic sheets, as specified (see 6.2), packaged as specified (see 6.2), shall be packed in accordance with 5.2.1.2.

5.2.1.2 *Plastic rods and tubes.* Plastic rods and tubes, packaged as specified (see 6.2), shall be packed in a close-fitting container conforming to PPP-B-585, class 3; PPP-B-591, class II; PPP-B-601, overseas type; PPP-B-621, class 2; PPP-B-636, class weather-resistant; or PPP-B-640, class 2, grade A. The shipping containers shall be closed, strapped or banded in accordance with the applicable container specification or appendix. The gross weight of the triple-wall box or the wood boxes shall not exceed 200 pounds. The gross weight of the PPP-B-636 box shall not exceed the box specification limitations.

5.2.2 *Level B.*

5.2.2.1 *Plastic sheets.* Two, five, or ten plastic sheets, as specified (see 6.2), packaged as specified (see 6.2), shall be packed in accordance with 5.2.2.2.

5.2.2.2 *Plastic rods and tubes.* Plastic rods and tubes, packaged as specified (see 6.2), shall be packed in close-fitting shipping containers conforming to PPP-B-585, class 1; PPP-B-591, class I; PPP-B-601, domestic type; PPP-B-621, class 1; or PPP-B-636, class domestic. Closure shall be in accordance with the appendix to the container specification. The gross weight of the wood boxes shall not exceed 200 pounds. The gross weight of the PPP-B- box shall not exceed the box specification limitations.

5.2.3 *Level C.* Plastic sheets and plastic rods and tubes, packaged as specified (see 6.2), shall be packed in containers at the lowest rates, to insure acceptance by common carrier and will afford protection against physical or mechanical damage during direct shipment from the supply source to the first receiving activity for immediate use. This level shall conform to regulations as applicable to the mode of transportation and may be the supplier's commercial practice when such meets the requirements of this level.

5.2.4 *General.* Insofar as possible and practical, exterior containers shall be uniform in shape and size, and shall be of minimum cube and tare consistent with the protection required.

5.3 **Marking.**

5.3.1 *Civil agencies.* In addition to any special marking specified in the contract or order, shipping containers shall be marked in accordance with Fed. Std. No. 123.

5.3.2 *Military agencies.* In addition to any special marking required by the contract or order, unit packages, intermediate packages, and exterior shipping containers shall be marked in accordance with MIL-STD-129 (see 6.2).

6. NOTES

6.1 **Intended use.**

6.1.1 *Type G-1 (alkyd copolymer).* Parts machined from this material are intended for general usage. They possess good machinability, excellent abrasion resistance, and high heat resistance. Models made from this material may be used for the optical study of stress distribution.

6.1.2 *Type G-3 (allyl).* Parts machined from this material are intended for general usage. They have good optical properties, good loss factor, high dielectric strength, and high resistivity; however, care must be taken in machining and handling.

6.1.3 *Type E-2 (cross-linked styrene copolymer).* Parts machined from this material are intended for ultrahigh-frequency applications and show practically no change

in dielectric constant, and only slight change in dissipation factor, at the higher frequencies.

6.1.4 *Type M-1 (cast phenolic).* Parts machined from this material are intended for such applications as knobs, pointers, dials, and similar mechanical components of electronic equipment where good mechanical, rather than electrical, properties are essential.

6.2 Ordering data. Purchasers should select the preferred options permitted herein and include the following information in procurement documents:

(*a*) Title, number, and date of this specification.
(*b*) Type required (see 1.2).
(*c*) Clarity required (see 3.1.1).
(*d*) Form, with dimensions, required (see 3.1.2).
(*e*) Selection of applicable levels of packaging and packing required, and applicable marking (see 5.1, 5.2, and 5.3).
(*f*) Number of sheets to be packed in each shipping container (see 5.2.1.1 and 5.2.2.1).

6.3 Supersession data. This specification includes the requirements of MIL-P-77C, dated March 29, 1958.

6.4 International standardization agreement. Certain provisions of this specification are the subject of international standardization agreement ABC-NAVY-STD-17C. When amendment, revision, or cancellation of this specification is proposed which will affect or violate the international agreement concerned, the preparing activity will take appropriate reconcilation action through international standardization channels including departmental standardization offices, if required.

MILITARY INTEREST:

Custodians:
Army—MR
Navy—SH
Air Force—11

Review activities:
Army—EL, MI, MR, MU
Navy—SH
Air Force—11, 17, 69

User activities:
Army—GL
Navy—MC, WP, YD

Preparing activity:
Navy—SH

Review and user information is current as of the date of this document. For future coordination of changes to this document, draft circulation should be based on the information in the current Federal Supply Classification Listing of DOD Standardization Documents.

CIVIL AGENCY INTEREST:

Interested activities:

GSA-FSS
COM—NBS
DC

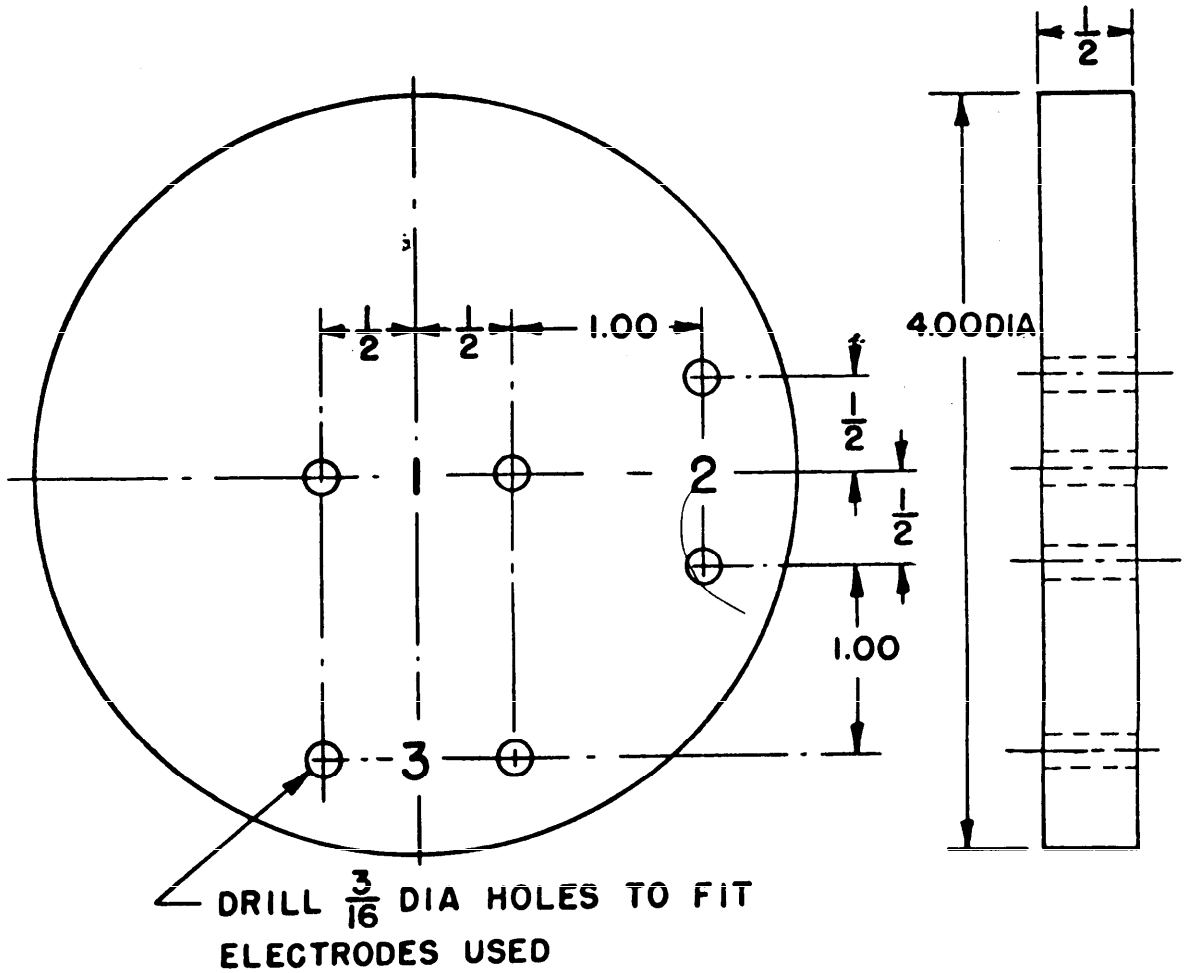

ALL DIMENSIONS IN INCHES

Figure 1. Specimen for dielectric-breakdown test.

Orders for this publication are to be placed with General Services Administration, acting as an agent for the Superintendent of Documents. See section 2 of this specification to obtain extra copies and other documents referenced herein. Price 10 cents each.

STANDARDIZATION DOCUMENT IMPROVEMENT PROPOSAL

INSTRUCTIONS

1. The preparing activity must complete blocks 1, 2, 3, and 8. In block 1, both the document number and revision letter should be given.

2. The submitter of this form must complete blocks 4, 5, 6, and 7.

3. The preparing activity must provide a reply within 30 days from receipt of the form.

NOTE: This form may not be used to request copies of documents, nor to request waivers, or clarification of requirements on current contracts. Comments submitted on this form do not constitute or imply authorization to waive any portion of the referenced document(s) or to amend contractual requirements.

I RECOMMEND A CHANGE:	**1. DOCUMENT NUMBER** L-P-516a	**2. DOCUMENT DATE (YYYYMMDD)** 2001JAN22

DOCUMENT TITLE
PLASTIC SHEET AND PLACTIC ROD, THERMOSETTING, CAST

4. NATURE OF CHANGE *(Identify paragraph number and include proposed rewrite, if possible. Attach extra sheets as needed.)*

5. REASON FOR RECOMMENDATION

6. SUBMITTER

a. NAME *(Last, First, Middle Initial)*	b. ORGANIZATION	
c. ADDRESS *(Include Zip Code)*	d. TELEPHONE (Include Area Code) (1) Commercial (2) DSN *(if applicable)*	**7.DATE SUBMITTED** (YYYYMMDD)

8. PREPARING ACTIVITY

a. NAME Defense Supply Center Richmond	b. TELEPHONE *Include Area Code)* (1) Commercial (804) 279-5019 (2) DSN 695-5019
c. ADDRESS *(Include Zip Code)* ATTN: DSCR-VBD (C. Hammond) 8000 Jefferson Davis Highway Richmond, VA 23297-5610	**IF YOU DO NOT RECEIVE A REPLY WITHIN 45 DAYS, CONTACT:** DEFENSE STANDARDIZATION PROGRAM OFFICE (DLSC-LM) 8725 John J. Kingman Road, Suite 2533 Fort Belvoir, Virginia 22060-6221 Telephone (703) 767-6888 DSN 427-6888