Downloaded from http://www.everyspec.com

U.S. General Services Adminstration

Federal Specification for the Star-of-Life Ambulance

KKK-A-1822E

GENERAL SERVICES ADMINISTRATION
Federal Supply Service
June 1, 2002 - GSA Automotive

Downloaded from http://www.everyspec.com

Downloaded from http://www.everyspec.com

FEDERAL SPECIFICATION FOR
AMBULANCES
KKK-A-1822E

Attached is the Federal Specification for the "Star-of-Life Ambulance," KKK-A-1822E, Dated June 1, 2002

This document supersedes KKK-A-1822D, dated November 1, 1994; and includes numerous changes intended to provide for a more reliable, functional, and safer ambulance. Further, this revision includes NOTES, NOTICES, and WARNINGS to inform purchasers of particularly important areas that can directly impact safety, reliability, and the ability of the ambulance to complete its mission.

PURCHASERS SHOULD CAREFULLY READ THIS SPECIFICATION PRIOR TO ORDERING AN AMBULANCE, AND SHOULD AVOID REQUIRING THE AMBULANCE MANUFACTURER TO SUPPLY EQUIPMENT OR DESIGNS THAT ARE CONTRARY TO THE REQUIREMENTS AND INTENT OF THIS SPECIFICATION.

Downloaded from http://www.everyspec.com

Copies of this specification are available from the following sources:

This specification may be downloaded at no cost from the internet at: FSS.GSA.GOV/VEHICLES/BUYING

Printed copies can be obtained from:

Department of Defense:
Naval Publications and Forms Center
5801 Tabor Avenue
Philadelphia, PA 19120
Telephone: (215) 697-3325

Bidders and Government Contractors:

Copies may also be requested from the GSA Business Service Centers at the regional offices in Boston, New York, Washington (DC), Philadelphia, Atlanta, Chicago, Kansas City (MO), Fort Worth, Houston, Denver, San Francisco, Los Angeles, and Seattle.

Comments, information, and questions should be sent to:

Director, Vehicle Engineering and Commodity Management Division, (FFAE)
Office of Vehicle Acquisition and Leasing Services
General Services Administration
Washington, DC 20406

Downloaded from http://www.everyspec.com

Table of Contents

1. SCOPE, PURPOSE, AND CLASSIFICATION.....1

2. APPLICABLE DOCUMENTS.....4

3. REQUIREMENTS.....8

4. QUALITY ASSURANCE PROVISIONS.....71

5. PREPARATION FOR DELIVERY.....77

6. NOTES.....78

Figure 1:
Type I, Conventional, Cab-Chassis with
Modular Ambulance Body.....88

Figure 2:
Type II, Standard Van,
Integral Cab-Body Ambulance.....90

Figure 3:
Type III, Cutaway Van, Cab-Chassis with
Integrated Modular Ambulance Body.....92

Figure 4:
Star of Life Symbol®.....94

Figure 5a:
12 Volt Electrical System with
Battery Disconnect Switch.....95

Figure 5b:
12 Volt Electrical System without Battery
Disconnect Switch.....96

Figure 6:
115 Volt AC Electrical System.....97

Figure 7:
Portable Equipment Battery Charging Circuit...98

ALPHABETICAL INDEX.....99

Downloaded from http://www.everyspec.com

THIS PAGE INTENTIONALLY LEFT BLANK.

Downloaded from http://www.everyspec.com

1. Scope, Purpose, and Classification

1.1 SCOPE.

This document covers certified, tested, commercial type, Emergency Medical Services (EMS) ambulances (except military field ambulances) built on chassis that are suitable for the intended application and meet the requirements herein. The ambulances are front or rear wheel driven (4x2) or four wheel driven (4x4) and warranted as specified in Section 6. This document may be used to procure an ambulance and the applicable additional systems and equipment. Purchasers should follow the ordering data in Paragraph 6.2 to aid them with the preparation of their specification, requisition, and contract.

1.1.1 DEFINITION OF AMBULANCE.

The ambulance is defined as a vehicle for emergency medical care which provides: a driver's compartment; a patient compartment to accommodate an emergency medical technician (EMT)/paramedic and two litter patients (one patient located on the primary cot and a secondary patient on a folding litter located on the squad bench) so positioned that the primary patient can be given intensive life-support during transit; equipment and supplies for emergency care at the scene as well as during transport; two-way radio communication; and, when necessary, equipment for light rescue/extrication procedures. The ambulance shall be designed and constructed to afford safety, comfort, and avoid aggravation of the patient's injury or illness.

1.1.2 PURPOSE.

The purpose of this document is to describe ambulances which are authorized to display the "Star of Life" symbol.® It establishes minimum specifications, test parameters, and essential criteria for ambulance design, performance, equipment, appearance, and to provide a practical degree of standardization. The object is to provide ambulances that are nationally recognized, properly constructed, easily maintained, and, when professionally staffed and provisioned, will function reliably in pre-hospital or other mobile emergency medical service.

1.1.3 CERTIFIED "STAR OF LIFE".

The ambulance manufacturer/contractor shall furnish the purchaser(s) citing this specification an authenticated certification and label (see 3.19) that certifies a "Star of Life" ambulance and equipment complying with this specification and applicable amendments (if any) in effect on the date of manufacture (see 4.3). Ambulance vehicles so certified may display the registered "Star of Life" symbol® as defined by the U.S. Department of Transportation (DOT), National Highway Traffic Safety Administration (NHTSA), see Figure 4.

Downloaded from http://www.everyspec.com

1.2 CLASSIFICATION.

1.2.1 AMBULANCE TYPES, CLASSES, AND FLOOR CONFIGURATIONS.

The authorized "Star of Life" ambulances shall be of the following types, classes, and configurations (to specify, see 6.2-b & c):

NOTE: FOR OPTIONAL ADVANCED LIFE SUPPORT (ALS) APPLICATIONS,USERS SHOULD CONSIDER SPECIFYING A MODULAR (TYPE I OR III) AMBULANCE. MODULAR AMBULANCES PROVIDE ADDITIONAL SPACE AND COMPARTMENTATION FOR CARDIAC MONITORS, DRUG CASES, ETC. THE BASIC LIFE SUPPORT (BLS) CONFIGURATION IS STANDARD ON ALL TYPES.

Type I - Conventional truck, cab-chassis with modular ambulance body (3.1.2 and Figure 1).

CLASS	CONFIGURATION
1 - Two rear wheel driven (4x2).	A or B.
2 - Four wheel driven (4x4).	A or B.

Configuration A - Elevating cot and squad bench for ALS (3.1.5.1 and 3.11.4).

Configuration B - Elevating cot and a squad bench for BLS (3.1.5.2).

Type I -AD (Additional Duty-with increased GVWR, storage and payload capacity) - A or B or Neonatal, Critical Patient Transport, or A or B with Rescue and/or Fire Suppression Package. (3.1.2)

CLASS	CONFIGURATION
1 - Two rear wheel driven (4x2).	A or B or *
2 - Four wheel driven (4x4).	A or B or *

* As specified by purchaser. The configuration shall provide for a neonatal, critical patient transport, configuration A or B with fire suppression package and/or rescue capability when specified.

Type II - Standard Van, integral cab-body ambulance (3.1.3 and Figure 2).

CLASS	CONFIGURATION
1 - Two rear wheel driven (4x2).	A** or B.
2 - Four wheel driven (4x4).*	A** or B.

* Requires conversion of chassis to four wheel drive (4x4) (see 3.1.6).

** On a Type II, ALS features are limited, (see 6.2-c).

Downloaded from http://www.everyspec.com

Type III - Cutaway Van, cab-chassis with integrated modular ambulance body (3.1.4 and Figure 3).

CLASS	CONFIGURATION
1 – Two rear wheel driven (4x2).	A or B.
2 - Four wheel driven (4x4). *	A or B.

* Requires conversion of chassis to four wheel drive (4x4) (see 3.1.6).

Configuration A - Elevating cot and squad bench for ALS (3.1.5.1 & 3.11.4).

Configuration B - Elevating cot and squad bench for BLS (3.1.5.2)

Type III - AD (Additional Duty-with increased GVWR, storage and payload capacity) - A or B or Neonatal, Critical Patient Transport, or A or B with Rescue and/or Fire Suppression Package. (3.1.4.1)

CLASS	CONFIGURATION
1 - Two rear wheel driven (4x2).	A or B or *
2 - Four wheel driven (4x4).	A or B or *

* As specified by purchaser. The configuration shall provide for a neonatal, critical patient transport, configuration A or B with fire suppression package and/or rescue capability when specified.

Downloaded from http://www.everyspec.com

2. Applicable Documents

2.1 The following documents form a part of this specification, to the extent specified. Unless a specific issue is identified, the issue in effect, on date of invitation for bids or request for proposal, shall apply.

FEDERAL SPECIFICATIONS:

L-S-300 - Sheeting and Tape, Reflective, Non-exposed Lens, Adhesive Backing.

RR-C-901/3 - Cylinders, Compressed Gas: With Valve or Plug and Cap; ICC3aa.

FEDERAL STANDARDS:

Federal Standard No. 297 - Rustproofing of Automotive Vehicles

Activities outside the Federal Government may obtain copies of Federal Specifications, Standards, and Handbooks as outlined under General Information in the Index of Federal Specifications and Standards and at the prices indicated in the Index. The Index, which includes cumulative monthly supplements as issued, is for sale on a subscription basis by the Superintendent of Documents, U.S. Government Printing Office, Washington, DC 20402.

Single copies of this document and other Federal Specifications required by activities outside the Federal Government for bidding purposes are available from Business Service Centers at the General Services Administration Regional Offices in Boston, New York, Philadelphia, Washington (DC), Atlanta, Chicago, Kansas City (MO), Fort Worth, Denver, San Francisco, Los Angeles, and Seattle (Auburn, WA).

Federal Government activities may obtain copies of Federal Specifications, Standards, and Handbooks, and the Index of Federal Specifications and Standards from established distribution points in their agencies.

MILITARY STANDARDS:

MIL-STD-461 Interface Standard - Requirements for the Control of Electromagnetic Interference Characteristics of Subsystems and Equipment.

MIL-STD-1223 Non-tactical Wheeled Vehicles, Painting, Identification Marking and Data Plate Standards.

Copies of Military Specifications and Standards required by suppliers in connection with specific procurement functions should be obtained from the procuring activity or as directed by the contracting officer.

LAWS AND REGULATIONS:

29 CFR 1910.1030: Bloodborne Pathogens

40 CFR 86: Control of Air Pollution from New Motor Vehicles and New Motor Vehicle Engines.

47 CFR, PART 89: Public Safety Radio Services (FCC)

Downloaded from http://www.everyspec.com

49 CFR 393: Federal Motor Carrier Safety Regulations (FMCSR)

49 CFR 571: Federal Motor Vehicle Safety Standards (FMVSS)

The Code of Federal Regulations (CFR) and the Federal Register (FR) are for sale on a subscription basis by the Superintendent of Documents, U.S. Government Printing Office, Washington, DC 20402. When indicated, reprints of certain regulations may be obtained from the Federal agency responsible for issuance thereof.

2.2 OTHER PUBLICATIONS.

The following documents form a part of this specification to the extent specified. Unless a specific issue is identified, the issue in effect on date of invitation for bids or request for proposal shall apply.

STATE OF CALIFORNIA MOTOR VEHICLE CODE

Application for copies should be addressed to: Department of Motor Vehicles, 2570 24th Street, Sacramento, California 95809.

THE TIRE AND RIM ASSOCIATION, INC., YEARBOOK:

Application for copies should be addressed to The Tire and Rim Association, Inc., 175 Montrose W. Ave., Suite 150, Copley, Ohio 44321. Phone (216) 666-8121.

SOCIETY OF AUTOMOTIVE ENGINEERS (SAE), INC., STANDARDS AND RECOMMENDED PRACTICES:

Technical Division, SAE, 400 Commonwealth Dr. Warrendale, PA 15096

J163 - Low Tension Wiring and Cable Terminals and Splice Clips.
J537 - Storage Batteries.
J541 - Voltage Drop for Starting Motor Circuits.
J551 - Measurement of Electromagnetic Radiation from Motor Vehicles and Devices.
J553 - Circuit Breakers.
J561 - Electrical Terminals, Eyelet and Spade Type.
J575 - Tests for Motor Vehicle Lighting Devices & Components.
J576 - Plastic Materials, For Use In Optical Parts Such As Lenses and Reflectors of Motor Vehicle Lighting Devices.
J578 - Color Specification for Electric Signal Lighting Devices.
J595 - Flashing Warning Lamps for Authorized Emergency, Maintenance, and Service Vehicles.
J638 - Test Procedure and Ratings for Hot Water Heaters for Motor Vehicles.
J639 - Safety Practices for Mechanical Vapor Compression Refrigeration Equipment or Systems Used To Cool Passenger Compartment of Motor Vehicles.
J689 - Approach, Departure, and Ramp Breakover Angles.
J682 - Rear Wheel Splash and Stone Throw Protection.
J683 - Tire Chain Clearance.
J771 - Automotive Printed Circuits.
J858 - Electrical Terminals, Blade Type.
J928 - Electrical Terminals, Pin and Receptacle Type.
J994 - Backup Alarms, Performance Test and Application.
J1054 -Warning Lamp, Alternating Flashers.
J1127 -Battery Cable.
J1128 -Low Tension Primary Cable.

Downloaded from http://www.everyspec.com

J1292 -Automobile, Truck, Truck-Tractor, Trailer, and Motor Coach Wiring.
J1349 -Engine Power Test Code, Spark Ignition and Diesel.
J1318 -Strobe Warning Lights.

NATIONAL TRUCK EQUIPMENT ASSOCIATION / AMD:

AMD Standard 001 - Static Load For Ambulance Body Structure Test.

AMD Standard 002 - Body Door Retention Components Test.

AMD Standard 003 - Oxygen Tank Retention System Test (Main and Portable Bottles).

AMD Standard 004 - Litter Retention System Test.

AMD Standard 005 - Ambulance 12 Volt DC Electrical Systems Test.

AMD Standard 006 - Sound Level Test Code.

AMD Standard 007 - Carbon Monoxide Levels For Patient Compartment Interiors.

AMD Standard 008 - Ambulance Patient Compartment Grab Rail (Load Test).

AMD Standard 009 - Alternating Current (AC) Electrical Systems .

AMD Standard 010 - Water Spray Test For Ambulances

AMD Standard 011 - Ambulance Equipment Temperature Test

AMD Standard 012 – Ambient Temperature Tests (Heating and Air Conditioning)

AMD Standard 013 - Weight Distribution Test

AMD Standard 014 - Cooling System Test

AMD Standard 015 - Ambulance Main Oxygen System Test

Application for copies should be addressed to the Ambulance Manufacturer's Division (AMD) of the National Truck Equipment Association, 37400 Hills Tech Drive, Farmington Hills, MI 48331.(248) 489-7090, FAX (248) 489-8590. WWW.NTEA.COM

AMERICAN COLLEGE OF EMERGENCY PHYSICIANS (ACEP):

Guidelines for Ambulance Equipment.. Copies can be obtained from:
ACEP, P.O. Box 619911, Dallas, TX 75261-991**1**

AMERICAN SOCIETY FOR TESTING AND MATERIALS (ASTM) STANDARDS:

F 920 Standard Specification for Minimum Performance and Safety Requirements for Resuscitators Intended for Use with Humans.

F 960 Standard Specification for Medical and Surgical Suction and Drainage Systems

NATIONAL EMSC (Emergency Medical Services for Children) RESOURCE ALLIANCE:

–COMMITTEE ON AMBULANCE EQUIPMENT AND SUPPLIES,
Guidelines for pediatric equipment and supplies for Basic and Advanced life support ambulances (reprint) (0540) A check list is also available, item 0813 Minimum listing of ambulance equipment and supplies (ALS and BLS) for infants, children,

Downloaded from http://www.everyspec.com

and young adults. Copies of the list can be obtained by phone at: (202) 884-4927, or at www.ems-c.org/products/frame.htm and request item 0540 or 0813.

AUTOMOTIVE MANUFACTURERS EQUIPMENT COMPLIANCE AGENCY (AMECA):

Approval of Motor Vehicle Safety Equipment (emergency lights and sirens)

P.O. Box 76960, National Capitol Station Washington, D.C. 20013 or 1090 Vermont Avenue, N.W., Suite 1200, Washington, D.C. 20005.

Technical society and technical association specifications and standards are generally available for reference from libraries. They are also distributed among technical groups and using Federal agencies.

2.3 ORDER OF PRECEDENCE.

In the event of a conflict between the text of this specification and the references cited herein, the text of this specification shall take precedence.

Downloaded from http://www.everyspec.com

3. Requirements

3.1 GENERAL VEHICULAR DESIGN, TYPES, AND FLOOR PLAN.

3.1.1 DESIGN.

The ambulance and the allied equipment furnished under this specification shall be the manufacturer's current commercial vehicle of the Type, Class, and Configuration specified. The ambulance shall be complete with the operating accessories, as specified herein. It shall be furnished with such modifications and attachments as may be necessary to enable the vehicle to function reliably and efficiently in sustained operation. The design of the vehicle and the specified equipment shall permit accessibility for servicing, replacement, and adjustment of component parts and accessories with minimum disturbance to other components and systems. The term "heavy-duty", as used to describe an item, shall mean in excess of the standard quantity, quality, or capacity and represents the best, most durable, strongest, etc., part, component, system, etc., that is commercially available on the OEM chassis.

3.1.2 TYPE I AMBULANCE.

Type I vehicle, Class 1 or 2, Configuration A or B, shall be a chassis furnished with a 2-door enclosed cab. The chassis-cab shall be suitable for subsequent mounting of a transferable, modular, ambulance body conforming to the requirements specified herein (see Figure 1).

3.1.2.1 TYPE I - AD (Additional Duty) AMBULANCE.

Type I-AD, Class 1 or 2, Configuration A, B, or other user specified configurations such as for critical patient or neonatal transport, shall be a conventional truck, cab-chassis with modular body, and increased GVWR, storage, and payload. Additionally, other on board systems or equipment may be specified for rescue or fire suppression or combination of applications. The chassis shall be suitable for mounting of a transferable modular ambulance body conforming to the requirements herein.

3.1.3 TYPE II AMBULANCE.

Type II vehicle, Class 1 or 2, Configuration A or B, shall be OEM chassis manufacturer's commercial, long wheelbase, integral van. This vehicle shall be suitable for subsequent ambulance conversion/modification in compliance with the requirements herein (see Figure 2).

3.1.4 TYPE III AMBULANCE.

Type III, Class 1 or 2, Configuration A or B shall be a "cutaway" van with a transferable, modular, ambulance body or unitized cab-body mounted on a

Downloaded from http://www.everyspec.com

chassis. The chassis with unitized cab-body or front section cab-chassis shall be suitable for the subsequent fabrication, conversion, or modification into an ambulance incorporating the requirements and the equipment specified herein (see Figure 3).

3.1.4.1 TYPE III- AD (Additional Duty) AMBULANCE.

Type III-AD, Class 1 or 2, Configuration A, B, or other user specified configurations such as for critical patient or neonatal transport, shall be a cutaway cab-chassis with modular body, and increased GVWR, storage, and payload. Additionally, other on board systems or equipment may be specified for rescue or fire suppression or combination of applications. The chassis shall be suitable for mounting of a transferable modular ambulance body conforming to the requirements herein.

3.1.5 CONFIGURATION OF PATIENT COMPARTMENT.

Unless otherwise specified (see 6.2-c), Configuration "B", Basic Life Support (BLS) shall be provided in the patient compartment. All litters shall be loaded to position the patient's head forward in the vehicle.

3.1.5.1 CONFIGURATION "A" (ALS).

When specified for Types I or III (see 6.2-b), Advanced Life Support (ALS) applications, one primary patient shall be on a wheeled elevating cot and a secondary patient lying on a folding stretcher or combination stretcher chair on the squad bench, or one primary patient and three secondary seated patients on the squad bench (see 3.11.4) or EMTs/ Paramedics. The primary cot shall be center mounted or, when specified (3.15.4 M-21), a dual position mount shall be furnished. Unless otherwise specified (see 3.15.3-28), a (CPR) seat conforming to all specification requirements shall be furnished on the left (street) side of the body facing the patient's thoracic region, and include a seat belt and padding at the EMT's head region. Space shall also be furnished in the action wall/counter area for placement of a cardiac monitor/ defibrillator. When specified (see 3.15.4 M-25), a crash stable mounting bracket for securing the cardiac monitor/defibrillator shall be furnished. A locking drug kit compartment per 3.15.3-14 and high intensity light per 3.15.3-8 shall also be furnished. Two each, I-V hangers (per 3.11.9) shall be provided for the primary patient and secondary patient, one at the patient's head and one at the patient's lower extremities.

3.1.5.2 CONFIGURATION "B" (BLS).

Unless otherwise specified (see 6.2-c), Configuration "B" shall provide for one primary patient on a wheeled elevating cot and one secondary patient on a folding stretcher or combination stretcher/chair on a squad bench, which is also capable of accommodating three seated patients (see cots 3.11.5) or EMTs (see 3.10.3).

NOTE: IT IS PREFERABLE THAT THE PRIMARY PATIENT'S COT BE POSITIONED ON THE LEFT (STREET) SIDE OR CENTERED IN THE AMBULANCE PATIENT COMPARTMENT. A PATIENT WILL BE LESS LIKELY TO ASPIRATE FLUIDS OR OTHER STOMACH CONTENTS IF THEY ARE PLACED ON THEIR LEFT SIDE (RECOVERY POSITION) WITH THE RIGHT SIDE UP. THIS POSITION ALSO PERMITS EASIER VISUAL MONITORING OF THE PATIENT.

Downloaded from http://www.everyspec.com

3.1.6 FOUR WHEEL DRIVE, CLASS 2, 4x4.

When a 4x4 chassis is specified (see 6.2-b), the additional curb weight of the 4x4 chassis above the 4x2 chassis will reduce the payload proportionally. When available, a Class 2 ambulance shall be an original chassis manufacturer's (OEM) 4x4 chassis for Type 1 ambulances, or an OEM 4x2 model with a professionally engineered conversion to a four wheel drive (4x4) conforming to all applicable requirements herein. All workmanship, welding, mechanical fit, grade, and quality of components and materials used in conversions shall be equal to or greater than OEM manufacturer's production 4x4 units. Conversion components shall not interfere with other body, chassis, or mechanical parts through the complete range of suspension and wheel angle travel and allow proper alignment of axles. The tracking and wheelbase of the front/rear axles shall be identical on both sides of the vehicle. When available, the chassis manufacturer's OEM components used on the chassis manufacturer's other models with the same or greater GAWRs and GVWRs shall be furnished, including, but not limited to: spring hangers, shackles, drive axle, integral transmission/transfer case, universal joints, steering linkage, stabilizer bars, radius and torque rods, transfer case shaft linkage, brake calipers, pads, rotors, shock absorbers, and springs. When available, the chassis manufacturer's guidelines/requirements for 4x4 conversions shall be followed. The design of the 4x4 conversion shall minimize the height of the vehicle's chassis. The 4x4 converter shall include a complete chassis modifier FMVSS certification and sticker.

The 4x4 converter shall provide to the purchaser a full parts and labor warranty covering all added 4x4 parts and materials, including workmanship and design. The warranty shall also cover all OEM components affected or modified by the conversion process. This warranty shall be at least equivalent, in mileage and time, to the OEM chassis manufacturer's warranty, including any extended warranties required or furnished.

Accompanying each conversion shall be complete manuals showing operation, maintenance, and repair procedures, chassis manufacturer's part numbers, drawings for components used in the conversion, and dimensioned drawings for manufactured parts, alignment procedures, and specifications.

3.2 VEHICLE, AMBULANCE COMPONENTS, EQUIPMENT, AND ACCESSORIES.

The emergency medical care vehicles; including chassis, ambulance body, equipment, devices, medical accessories, and electronic equipment shall be standard commercial products, tested and certified to meet or exceed the requirements of this specification. The ambulance shall comply with all Federal Motor Vehicle Safety Standards (FMVSS) and other Federal and state regulations applicable or specified for the year of manufacture. The chassis, components, and optional items shall be as represented in the chassis manufacturer's current technical data. The ambulance body, equipment, and accessories shall be as represented in their respective manufacturer's current technical data. Data shall be limited to specifications and technical materials identical to that furnished to the authorized company representatives and shall be furnished to the engineering/technical offices of the procuring activity and the supplier's (contractor's) offices prior to acceptance of the ambulance. The supplier shall provide total

Downloaded from http://www.everyspec.com

standardization and interchangeability between similar vehicles, equipment, items, and accessories specified for all ambulance units under each contract.

3.3 RECOVERED MATERIALS.

All equipment, material, and articles required under this specification are to be new or fabricated from new materials produced from recovered materials. The term "recovered materials" means materials which have been collected or recovered from solid waste and reprocessed to become a source of raw materials, as opposed to virgin raw materials. None of the above shall be interpreted to mean that the use of used or rebuilt products is allowed under this document.

3.4 VEHICLE OPERATION, PERFORMANCE, AND PHYSICAL CHARACTERISTICS.

3.4.1 OPERATION AND PERFORMANCE.

Unless otherwise specified by the purchaser, all requirements in Section 3.4 shall be met with the ambulance loaded to meet or exceed the minimum specified payload including all specified equipment and devices installed and operating at the maximum power-consuming condition, i.e., air conditioning, lights, radio(s), etc., with the chassis performing in accordance with the specified chassis manufacturer's technical data. The vehicle shall be capable of operating safely and efficiently under environmental conditions outlined herein or as specified in the invitation for bid, contract, or order. When specified by the purchaser for ambulances requiring higher GVWR's to carry additional specialty equipment, e.g. medical; rescue; neonatal; (see 6.2-d), lower performance levels are acceptable in Paragraphs 3.4.6 through 3.4.8.2.

3.4.2 TEMPERATURE CONDITIONS.

The ambulance, including all required systems, equipment, and permanently installed medical devices (except when medical devices are regulated by another agency) furnished inside the ambulance, when serviced and maintained in accordance with the OEM manufacturer's recommendations (4.4), shall be capable of being stored without damage or deterioration in ambient temperatures of -34° C to 52° C (- 30° F to 125° F). Testing shall be in accordance with AMD Standard 011.

1) The ambulance and ambulance equipment shall be cold soaked for 6 hours at -34° C (-30° F) followed by a 1 hour cold soak at -18° C (0° F). All of the vehicle's non-engine powered equipment systems shall then be tested and operated at the -18° C (0° F) temperature. The engine shall then be started and all remaining chassis and ambulance systems shall be tested.

2) The ambulance and ambulance equipment shall be heat soaked at 53° C (125° F) for 6 hours followed by 1 hour heat soak at 43° C (110° F). All the vehicles non-engine powered systems shall then be tested and operated at the 43° C (110° F) temperature. The engine shall then be started and all remaining chassis systems and equipment shall be tested.

Downloaded from http://www.everyspec.com

Medical devices, such as resuscitation and suctioning apparatus, shall be cold tested for the required flow performance on 12 volt DC vehicle power and 115 volt AC power modes (see 3.12.1.1). Type certification from medical and other equipment manufacturers is acceptable.

3.4.3 NOISE AND SOUND LEVEL LIMITS, EXTERIOR.

Unless more stringent sound levels are regulated by the states and municipalities where the ambulance will be based, the exterior noise level produced by the vehicle, except siren, shall not exceed Federal regulations.

3.4.4 VEHICLE PERFORMANCE.

The ambulance shall provide a smooth, stable ride, with minimum noise and without abnormal vibration. The ambulance to be certified shall be tested under conditions in paragraph 4.4.4.

3.4.5 BRAKES.

The ambulance braking system as delivered to the user shall comply to performance values required by Federal Motor Vehicle Safety Standards (FMVSS), and when available from the chassis manufacturer shall include ABS.

3.4.6 SPEED.

The vehicles shall be capable of a sustained speed of not less than 105 km/hr (65 mph) over dry, hard surfaced, level roads, at sea level, and passing speeds of 113 km/hr (70 mph) when tested under normal ambient conditions.

3.4.7 ACCELERATION.

Vehicle shall have a minimum average acceleration, at sea level, of 0-88 km/hr (0-55 mph) within 25 seconds. Test shall be performed under normal ambient conditions. Test under 4.4.4.

3.4.8 GRADEABILITY.

At full payload, the vehicle shall be capable of meeting the following requirements. The determination shall be made by actual test or chassis manufacturer's certified computer prediction or chassis manufacturer's certification.

3.4.8.1 GRADEABILITY AT SPEED.

Minimum gradeability at speed shall be 89 km/hr (55 mph) on a 3% (1.72 degrees) grade.

3.4.8.2 MINIMUM LOW SPEED GRADEABILITY.

The minimum low speed gradeability of 8 km/hr (5 mph) on a 35% (19.3 degrees) grade is required for Class I (4x2) vehicles and 45% (24.2 degrees) grade for Class 2 (4x4) vehicles in the low 4x4 range.

3.4.9 FUEL RANGE.

Unless otherwise specified (see 6.2-e), the ambulance shall be capable of being driven for at least 402 km (250 miles) without refueling under the conditions in 4.4.4.

Downloaded from http://www.everyspec.com

3.4.10 FORDING.

The vehicle shall be capable of three fordings, without water entering patient and equipment compartments while being driven through a minimum of 20 cm (8 in.) of water, at speeds of 8 km/hr (5 mph), for a distance of at least 30.5 m (100 feet). Test under 4.4.4.

3.4.11 VEHICLE PHYSICAL DIMENSIONAL REQUIREMENTS.

3.4.11.1 LENGTH.

Overall length of the ambulance shall not exceed 671 cm (22 ft), including bumpers, but excluding rear step and bumper guards. Purchaser may specify (see 6.2-f) additional length if necessary to accommodate special equipment or larger bodies and crew cabs but should consult with the manufacturer to determine that other safety, handling, and functional characteristics are not compromised.

3.4.11.2 WIDTH.

Unless otherwise specified (see 6.2-g), the overall (OA) width of ambulance bodies having single rear wheels shall be between 200 and 213 cm (79 and 84 in.), excluding mirrors and lights. The ambulance body sides, on a chassis with dual rear wheels, shall be within+/- 6.35 cm (+/- 2.5 in.) of the overall width of the tires (outside sidewalls) (see 3.5.6, 3.6.5.6, and 3.9.7). Tires shall not extend beyond the fenders. Unless approved by the purchaser and permitted by state laws, the maximum ambulance body width shall not exceed 244 cm (96 in.), excluding mirrors, lights, and other safety appurtenances. The wide track axle shall be furnished on dual rear wheeled vehicles, unless a narrow ambulance body is specified by the purchaser (see 6.2-g).

3.4.11.3 HEIGHT.

Unless otherwise specified (see 6.2-h), overall height of the ambulance at curb weight (see 3.5.1) shall not exceed 279 cm (110 in.), including roof mounted equipment, but excluding two-way radio antenna(s).

3.4.11.4 GROUND CLEARANCE.

With the exception of the chassis manufacturer's furnished and installed components, the lowest part of the vehicle, when loaded to the GVWR, shall have a minimum of 20 cm (8in.) of ground clearance, and 15 cm. (6") for chassis mounted components.

3.4.11.5 ANGLE OF APPROACH, RAMP BREAKOVER, AND DEPARTURE.

With the exception of the chassis manufacturer's furnished and installed components ,t,he ambulance, loaded to the GVWR (including payload 3.5.2) with bumpers and rear step (down if folding style), shall provide not less than the following clearance, measured in accordance with SAE J689

Approach angle	20 degrees
Ramp breakover	10 degrees
Departure angle	10 degrees

Downloaded from http://www.everyspec.com

3.4.11.6 TURNING RADIUS.

Shall not be greater than chassis OEM standard.

3.4.11.7 FLOOR HEIGHT.

The finished floor (loading) heights shall not exceed 84 cm (33 in.) on Class 1 (4x2) vehicles and 97 cm (38 in.) for Class 2 (4x4) vehicles. The height shall be measured at curb weight plus full payload but minus patients and personnel. The use of an automotive "dump valve" on air suspension vehicles is acceptable to achieve the loading height requirement. The system shall include an interlock that only permits vehicle lowering when the vehicle is in neutral or park, and the parking brake is set.

3.5 VEHICLE WEIGHT RATINGS AND PAYLOAD.

3.5.1 CURB WEIGHT.

Curb weight is the total weight of the complete ambulance and is defined as: chassis (including batteries, spare tire, jack tire changing tools), cab, body, minimum required equipment per this specification, and a full complement of fuel, lubricants, and coolant, excluding optional equipment in 3.15.3 and 3.15.4, and any non-portable vehicle mounted rescue (extrication) equipment, permanently mounted fire suppression system and equipment including nozzles, hoses, tanks, pumps, etc. and including a full complement of water and related foam, chemicals, etc..

3.5.2 PAYLOAD ALLOWANCE.

Each vehicle's payload allowance shall be determined and displayed in accordance with the weight/payload certification form (sticker) depicted on page 14. Sticker shall be located in a conspicuous location in the vehicle. Payload shall be over and above the specified curb weight (see 3.5.1) of the vehicle and include specified options, miscellaneous medical equipment, and communications equipment that is appropriately distributed within the vehicle. The usable payload for modular Type I AD, or Type IIIAD (with increased GVWR e.g. 14,000 lbs.) ambulances shall be specified by the customer.

WARNING: DUE TO POTENTIAL HAZARDS AND DAMAGE TO VEHICLE'S CHASSIS, THE AMBULANCE SHALL NOT BE OVERLOADED. THE PURCHASER SHOULD CONSULT WITH THE AMBULANCE AND/OR CHASSIS MANUFACTURER(S) TO DETERMINE ACTUAL RESERVE CAPACITY ABOVE THIS SPECIFIED MINIMUM REQUIRED HEREIN.

Unless additional payload is specified (see 6.2-I) by the purchaser, the required minimum payload per vehicle shall be as follows:

1. Single, rear wheeled, modular ambulances (Type I or III).— 680 kg (1500 lbs.)
2. Single, rear wheeled, van ambulances (Type II).— 771.11 kg (1700 lbs.)
3. Dual, rear wheeled, modular ambulances (Type I or III).— 793.79 kg (1750 lbs.)

Downloaded from http://www.everyspec.com

4. Additional Duty Modular Ambulances (Type I or IIIAD) — payload as specified by customer.

The payload shall be evenly distributed throughout the vehicle and shall consist of the following:

1. Driver and EMT at 79 kg (175 lbs.) each.
2. Two patients at 79 kg (175 lbs.) each.
3. Main and portable oxygen bottles.
4. Stretchers, cots, and patient handling equipment.
5. Portable, removable, medical devices.
6. Durable and disposable medical items.
7. Optional vehicle equipment such as battery charger, inverter, or any other optional items or equipment not supplied as a base vehicle requirement.
8. Communications equipment.
9. Extrication and rescue equipment.
10. Portable fire extinguishers in addition to units required in 3.15.2 as specified by purchaser.

Downloaded from http://www.everyspec.com

NOTICE: **THIS VEHICLE, AS MANUFACTURED, CONFORMS TO THE PAYLOAD REQUIREMENTS OF THE FEDERAL AMBULANCE SPECIFICATION KKK-A-1822. USERS SHALL NOT LOAD VEHICLES ABOVE THE GVWR. USERS SHOULD DETERMINE THAT THE ACTUAL LOAD, TO BE PLACED ON THE VEHICLE, DOES NOT EXCEED THE USABLE PAYLOAD.**

Ambulance Manufacturer's Name _____

Chassis Model, Year of Manufacture_____

1. Vehicle Type and Class_____ kg(lbs.)

2. Chassis Manufacturer GAWR-Front _____ kg(lbs.)

3. Chassis Manufacturer GAWR-Rear _____ kg(lbs.)

4. Chassis Manufacturer GAWR _____ kg(lbs.)

5. Minimum Payload per KKK-A-1822 Or
   As Specified. (Para. 3.5.2) _____ kg(lbs.)

6. Curb Weight-Front Base Vehicle _____ kg(lbs.)

7. Curb Weight-Rear Base Vehicle _____ kg(lbs.)

8. Curb Weight Base Vehicle
   (Item 6 Plus Item 7) (Para. 3.5.1) _____ kg(lbs.)

9. Payload of Basic Vehicle
   (Item 4 Minus Item 8)
   Must Meet or Exceed Item 5 _____ kg(lbs.)

10. Total Weight of Options as Specified On Vehicle _____ kg(lbs.)

11. REMAINING USABLE PAYLOAD
    (ACTUAL WEIGHT USER MAY ADD)
    (Item 9 Minus Item 10) _____ kg(lbs.)

CAUTION:

THIS STICKER/PLATE SHALL BE MOUNTED ON THE BODY (MODULE) IN A CONSPICUOUS LOCATION.

The certification sticker is shown here as a suggested format. Deviation in dimensions are acceptable. All text must be included in manufacturer's stickers.

Downloaded from http://www.everyspec.com

3.5.3 GROSS VEHICLE WEIGHT RATING (GVWR).

The ambulance gross vehicle weight rating shall equal or exceed the combination of the vehicle's curb weight and payload weight. The chassis manufacturer's rating label shall show the actual gross vehicle weight rating (GVWR) and the gross axle weight rating (GAWR) of the vehicle (also see 3.19).

3.5.4 WEIGHT DISTRIBUTION.

To provide for maximum safety, purchasers and manufacturers shall locate vehicle mounted components, equipment, and supplies to provide a vehicle that is laterally balanced and has front/rear loading that is proportional to axle ratings. The weight distribution of a properly loaded ambulance on a level surface shall permit conformance to the braking requirements in FMVSS 105 and for air brake vehicles FMVSS 121. The right and left wheel of each axle (at curb weight see 3.5.1) of a completed ambulance shall be weighed to determine weight distribution. The weight between the right and left side of a given axle, when on a level surface, shall be within 5 percent when calculated in accordance with 4.4.3.1 and tested in accordance with AMD Standard 013. The ambulance manufacturer shall locate the center of gravity (CG) of the ambulance/ambulance body to determine and assure the purchaser that the CG of the completed ambulance does not exceed the maximum limits set by the chassis manufacturer. To meet the above weight distribution requirements, consideration shall be given by the purchaser and manufacturer to locate equipment and components to permit inherently proper lateral balance, front/rear axle loading, and center of gravity.

WARNING: AMBULANCE PURCHASERS SHOULD PAY PARTICULAR ATTENTION TO THE FRONT/REAR WEIGHT DISTRIBUTION OF THE VEHICLE IN ORDER TO MAXIMIZE HANDLING CHARACTERISTICS, TRACTION, AND BRAKING PERFORMANCE. WEIGHT DISTRIBUTION SHOULD BE PROPORTIONAL TO THE FRONT AND REAR GAWR'S.

3.5.5 RATINGS.

Vehicle and component ratings shall be the chassis manufacturer's published ratings and shall not be raised above the chassis manufacturer's rating. When ratings are not published or chassis has been modified, the verification data of the component manufacturer's rating shall be made available to the appropriate offices of the procuring activity.

3.5.6 CAB TO AXLE (CA), TYPE I AND III VEHICLES.

Cab to axle (CA) dimension of the vehicle chassis shall permit a minimum of 50 percent of the outside body length (including cab extensions) forward of the rear axle centerline, plus cab to body clearance. Bodies designed with wheel openings shall have the rear wheels centered, +/- 5 cm (2 in.) longitudinally, within the opening, and +/- 13 mm (0.5 in.) laterally.

3.6 CHASSIS, POWER UNIT, AND COMPONENTS.

3.6.1 CHASSIS-FRAME.

The chassis shall include the chassis manufacturer's ambulance component package or, if not available, chassis manufacturer's heavy duty components that will enhance vehicles reliability,

Downloaded from http://www.everyspec.com

durability, safety, and comfort. The chassis-frame and components shall be constructed to withstand the strains of on-off road service and any special service and equipment requirements specified herein. All chassis (including cab) components shall be as represented in the chassis manufacturer's technical data.

3.6.2 VEHICLE LUBRICATION.

The chassis components, devices, accessories, and added equipment requiring lubrication shall be fully equipped with lubrication fittings, as provided by the chassis or equipment manufacturer.

3.6.3 POWER UNIT, ENGINES.

3.6.3.1 POWER UNIT.

The power unit shall meet or exceed the required vehicle performance specified herein (see 3.4), at not more than the engine manufacturer's recommended operating engine speed. It shall be of such design and construction that it will provide a smooth flow of power, at all rpm's, without undue vibration, strain, or overheating of engine parts.

3.6.3.2 ENGINE LOW TEMPERATURE STARTING.

The engine shall start satisfactorily without the aid of engine block preheating devices (except glow plugs or combustion air preheater) at - 18° C (0° F), for the diesel engine, and - 28.9° C (- 20° F) when a gasoline engine is specified (see 6.2-j). When specified by the purchaser, auxiliary engine/battery heating and/or starting devices (see 3.6.3.2.1) shall be provided to meet other starting requirements. Verification test shall be performed during the environmental test.

3.6.3.2.1 POWER PLANT HEATERS, MINIMUM - 34° C (- 30° F) STARTABILITY.

In addition to the chassis manufacturers standard block heater on diesel engines, when specified (see 3.15.3-16)), the manufacturer's standard power plant heater(s) (coolant or immersion type crankcase heaters and battery heaters) shall be furnished for the gasoline engine, which permits starting an engine at - 34°C (- 30° F).

3.6.3.3 DIESEL ENGINE.

Unless otherwise specified by the purchaser, the chassis manufacturer's standard or optional horsepower/displacement diesel engine and power train shall be provided, complying with requirements of 3.4. Net horsepower rating shall conform to SAE J1349. Additionally, the chassis manufacturer's block heater shall also be furnished. For type I-AD vehicle's the power train shall meet the performance requirements specified herein or as specified or approved by the purchaser.

3.6.3.4 GASOLINE ENGINE.

When specified (see 6.2-j), a gasoline engine shall be furnished which permits warranted operation on unleaded gasoline, when operated in accordance with OEM's manual. When specified (see 6.2-yy) or required for export, the vehicle shall be capable of warranted operation on either leaded or unleaded gasoline. Engine horsepower and torque requirements shall be sufficient to comply with the requirements specified in 3.4. Net

Downloaded from http://www.everyspec.com

horsepower ratings shall conform to SAE J1349. Vehicle(s) being offered/supplied with catalytic converters shall be identified to all purchasers.

NOTICE: PURCHASERS SHOULD BE AWARE THAT, BECAUSE OF THE SEVERE OPERATING CONDITIONS TO WHICH AN AMBULANCE IS EXPOSED, THE USE OF A GASOLINE ENGINE RESULTS IN SUBSTANTIALLY HIGHER UNDERHOOD AND UNDER VEHICLE TEMPERATURES WHICH COULD SERIOUSLY IMPACT VEHICLE RELIABILITY, DEPENDABILITY, SAFETY, AND MAY RESULT IN SOME MANUFACTURER'S CHASSIS WARRANTY BEING VOIDED.

3.6.4 POWER UNIT COMPONENTS.

3.6.4.1 OIL FILTER.

The oil filter shall be the chassis manufacturer's standard for the engine offered.

3.6.4.2 AIR FILTER.

The air filter shall be the chassis manufacturer's standard for the engine offered.

3.6.4.3 AIR POLLUTION CONTROL (see 6.2-k).

Vehicles destined for the 50 states, the District of Columbia, Puerto Rico, the Virgin Islands, Guam and American Samoa shall comply with the Environmental Protection Agency (EPA) regulations governing Control of Air Pollution from New Motor Vehicles and New Motor Vehicle Engines in effect on date of manufacture of the chassis/engine. In addition, vehicles destined for California shall comply with State of California regulations governing air pollution control in effect the date of manufacture. When specified (3.15.3-17), the vehicle shall comply with the EPA high altitude regulations. For export vehicles, the chassis/engine manufacturer's export vehicle emission package shall be furnished that complies with destination requirements.

3.6.4.4 FUEL SYSTEM.

The fuel system shall conform to FMCSR, Subpart E, 393.65 and 3.4.9 herein. Unless otherwise specified (see 6.2-e), fuel tank(s) capacity shall meet the range requirements in part 3.4.9. When more than one tank is furnished, tanks shall be interconnected and, when available from the chassis manufacturer, separately controlled and shall have a dash-mounted fuel gauge controlled by a selector switch which will permit separate fuel level readings for each tank. When available from the chassis manufacturer, the Class 2 ambulance shall have the fuel tank(s) protected by a metal shield (skid-plate) and shall be located in an area which will be free from hazards encountered in off-road, cross-country operation. A permanent plate at the fuel filler opening shall be furnished specifying type of fuel required.

3.6.4.5 COOLING SYSTEM.

The engine cooling system shall be a closed, air free, liquid state type with a coolant overflow recovery tank. The supplier shall provide the heaviest duty components and maximum size cooling system available from the chassis manufacturer. The cooling system design shall maintain the engine at safe operating temperatures at all drivable altitudes and grades encountered during

Downloaded from http://www.everyspec.com

on and off road vehicle use. Verification test: the cooling system shall be capable of maintaining a safe stabilized engine operating temperature for a minimum of one hour, at a minimum ambient temperature of 38° C (100° F), at all altitudes up to 3048 m (10,000 ft). For gasoline engines, the cooling system shall be capable of maintaining a safe operating temperature for not less than 40 minutes, at sea level, in a minimum ambient temperature of 35° C (95° F). Testing shall be at the engine speed required to maintain the generating systems as specified in 3.7.6 and shall be tested in accordance with AMD Standard 014.

3.6.4.5.1 ANTIFREEZE.

The cooling system shall be protected with the chassis manufacturer's recommended type and concentration of permanent type antifreeze.

3.6.4.6 EXHAUST SYSTEM.

Vehicle shall be equipped with an exhaust system in accordance with Federal Motor Carrier Safety Regulations, Part 393.83. The exhaust system shall be suspended using not less than three hangers, excluding the manifold attachment. The exhaust shall discharge at the vertical side(s) of the ambulance at a maximum distance of 25 mm (1 in.) beyond the side of the module and be angled /positioned to project the exhaust away from the door(s) to minimize fumes and contaminants entering the interior. On modular vehicles, the tailpipe outlet shall not terminate within 15 cm (6 in.) of the vertical axis of the fuel tank filler opening(s). Modifications or extensions made to the OEM exhaust system shall meet or exceed chassis manufacturer's requirements in terms of backpressure, components, design, and workmanship.

3.6.5 DRIVE TRAIN.

3.6.5.1 DRIVE TRAIN COMPONENTS.

The drive train and component's torque capacity shall meet or exceed the maximum torque developed in the lowest gear ratio by the engine. Transmission and controls shall comply with FMVSS 101 and 102.

3.6.5.2 AUTOMATIC TRANSMISSION.

Unless otherwise specified (see 6.2-l), the chassis manufacturer's automatic transmission shall be provided. The transmission shall provide not less than four speeds forward and one reverse and shall be equipped with the chassis manufacturer's heaviest duty oil cooler.

3.6.5.2.1 AUTOMATIC TRANSMISSION AUXILIARY HEAVY-DUTY OIL COOLER.

When specified (see 3.15.3-20), a heavy-duty, fin type auxiliary transmission oil cooler in addition to the OEM basic cooler (3.6.5.2) shall be provided and installed, in series, in a suitable location except behind the radiator.

3.6.5.3 TRANSFER CASE FOR CLASS 2 AMBULANCE.

Unless otherwise specified (see 6.2 l), a part-time four wheel drive system shall be provided for Class 2 vehicles. These vehicles shall be furnished with 2 speed transfer case that is integral with the main transmission. A shift pattern located on the shift knob or decal, within the cab, shall be provided. Front-wheel drive hubs (see 3.6.5.9) and special traction rear-end differential (see 3.6.5.8), shall also be furnished on 4x4 vehicles. When furnished as

Downloaded from http://www.everyspec.com

part of a Class 2 conversion, the differential shall be identical to or heavier duty than the unit furnished on the OEM's original 4x4 Type I, Class 2 chassis.

3.6.5.3.1 HEAVY-DUTY SKID PLATE (CLASS 2, (4X4)).

Unless otherwise specified (see 6.2-l) and when available from the chassis manufacturer, a heavy-duty skid plate shall be installed protecting engine, transmission, and transfer case from ground contact if there is less than 38 cm (15 in.) of clearance to the ground. Skid plate shall be demountable for servicing the engine and transmission. Openings shall be provided to enable draining of transmission and servicing the underside of the engine. For fuel tank protection, see 3.6.4.4.

3.6.5.4 CLUTCH.

Vehicles with manual transmissions shall be furnished with the manufacturer's largest, heavy-duty clutch available for the engine and model offered.

3.6.5.5 DRIVE-LINE.

The driveline (driveshaft, U-joints, etc.) shall be balanced and supported to perform throughout the design speed range without whipping or vibrating. Modifications resulting from lengthening the wheelbase or from 4x4 conversion shall be of chassis manufacturer's approved design.

3.6.5.6 AXLE, RATINGS, RATIOS.

Axle ratings shall exceed the load imposed on each axle, measured at the ground, when vehicle is loaded. When specified (see 6.2-l) that the vehicle is used in mountainous terrain, manufacturer shall provide the highest numerical axle ratio. The chassis OEM "wide dual" rear axle shall be furnished on dual rear wheel chassis, unless otherwise specified (see 6.2-m) for a narrow modular body.

3.6.5.7 BRAKE SYSTEMS, SERVICE AND PARKING.

Chassis manufacturer's heaviest duty, power assisted brakes, linings, and parking brake shall be furnished on the chassis model offered. ABS brakes shall be furnished when available. When air brakes are furnished, the system shall be designed to provide braking proportional to the front - rear weight distribution of the fully loaded vehicle. Additionally an air drier with moisture ejector shall be furnished and shall include a heater to prevent icing.

3.6.5.8 SPECIAL TRACTION (REAR END) DIFFERENTIAL.

Unless otherwise specified (see 6.2-l) or if not available from chassis manufacturer, all vehicles shall have a positive traction, limited slip differential or automatic, locking type differential.

3.6.5.9 DRIVE HUBS, FRONT WHEEL, (4X4, CLASS 2).

Unless otherwise specified (see 6.2-l), and when available from the chassis manufacturer, automatic type front wheel locking hubs shall be provided. Additionally, when a 4x4 conversion is furnished, the heaviest duty front hubs available from the axle manufacturer shall be furnished.

Downloaded from http://www.everyspec.com

3.6.5.10 SUSPENSION.

Vehicle shall be equipped with laterally matched sets (front and rear) of spring, torsion, or air suspension system components. Components shall have a rated capacity in excess of the load imposed on each member. For better riding quality, vehicle springs shall have chassis manufacturer's lowest clamped deflection rating (smoothest riding suspension) for the model offered. Suspension stabilizer bar(s) shall be furnished for front and rear, when available from chassis manufacturer for the model chassis furnished. Only corrections permitted by the chassis manufacturer to compensate for lean due to normal spring tolerance variations are permitted. Correction of lean due to imbalance is not permitted. VEHICLE SHALL BE BALANCED.

3.6.5.11 SPRING STOPS.

The chassis manufacturer's standard spring bumpers and axle stops shall be furnished. The stops/bumpers shall prevent the wheel and axles from striking the engine, oil pan, fenders, and body under all conditions of operation. Additionally, when a 4x4 conversion is furnished, spring stops/bumpers shall be provided and, at a minimum, be of OEM quality.

3.6.5.12 SHOCK ABSORBERS.

Shock absorbers, double-acting type, heaviest duty available from chassis manufacturer for model offered, shall be furnished on the front and rear axles. Class 2 (4x4) vehicles shall additionally be furnished with quad front shocks when available from chassis manufacturer.

3.6.6 STEERING.

The OE chassis manufacturer's standard, power assisted steering shall be furnished.

3.6.7 WHEELS.

Unless otherwise specified (see 6.2-m), Types I and III vehicles shall be equipped with dual rear wheels. Type II vehicles shall be equipped with single, front and rear wheels. Wheels shall conform to the recommendations of the Tire and Rim Association, Inc., and shall be identical in type, size, and load rating for all wheels on the vehicle, including the spare.

3.6.8 TIRES.

Tires shall be as furnished by the chassis manufacturer and shall be OEM tubeless, steel belted radials. All tires furnished shall comply to FMVSS 120.

3.6.9 RESERVED.

3.6.10 SPARE TIRE AND STORAGE.

Unless otherwise specified by the purchaser (see 6.2-o), one inflated spare wheel/tire assembly identical to those on the vehicle shall be furnished. The spare assembly shall be stored in an accessible weather protected compartment or area. When available from the chassis manufacturer, the spare tire shall be located under the rear of the vehicle. The spare tire assembly shall be accessed by the chassis manufacturer's winch type carrier. An equivalent winch carrier assembly may be retrofitted on other chassis. When locating spare tire assembly under the vehicle, all other specification requirements (e.g. departure angle, ground clearance, weight distribution) shall be in compliance. Access door shall be fitted with suitable latch and lock when accessible from outside the vehicle. Loose or removable

Downloaded from http://www.everyspec.com

panel(s)/door(s) shall not be acceptable. The spare tire assembly shall be accessible without removal of the patients from the compartment. The spare assembly and tools shall have restraining device(s) to eliminate rattling and dislocation in case of an accident. The carrier design shall enable removal and mounting of the spare assembly using only the tools specified in 3.6.13 (see 3.11.3).

3.6.11 TIRE CHAINS AND CLEARANCE.

Tire chain clearance on the furnished body shall be provided for all driving wheels per SAE J683. Additionally, sufficient chain clearance shall be provided to permit off road operation with the ambulance loaded to the maximum payload. When specified (see 6.2-ggg), an automatic tire chain system shall be furnished and installed. The system shall be engaged by the driver. When disengaged, the chain system shall swing up and away from the tire to provide ground clearance. The system shall not interfere with any other system or equipment, nor the normal operation of the vehicle.

3.6.12 WHEEL TIRE BALANCING.

Wheel/tire, hubs, and brake drum assemblies of the vehicle shall be in balance to a minimum of 112 km/hr (70 mph).

3.6.13 TOOLS (TIRE CHANGING).

When provided as original equipment from the chassis manufacturer vehicle shall be furnished with tools required for exchanging mounted tire assembly with the spare assembly and shall include at least a jack, jack handle, and wheel nut wrench. The jack height, when closed, shall permit its location under the axle or other satisfactory lift point at any wheel with the tire flat. The jack, without having to block the jack, shall be capable of raising any wheel of the loaded vehicle to a height adequate to permit removal and replacement of the wheel and tire assembly. Tools shall be stored in accordance with 3.6.10.

3.6.14 HUBCAPS.

Manufacturer's (OEM) standard hubcap or wheel cover shall be fitted on each wheel except the spare. Vehicles with dual wheels and Class 2 modular vehicles (see 3.1.6) do not require hubcaps.

3.7 ELECTRICAL SYSTEM AND COMPONENTS.

3.7.1 ELECTRICAL SYSTEM (REFERENCE FIGURE 5A or 5B).

The ambulance electrical system shall be equipped with, but not limited to, the following: dual, chassis manufacturer's 12 volt batteries; generating, starting, lighting, visual and audible warning systems; specified electronics equipment and devices (including master consoles located in the cab and patient compartment); and other specified accessory wiring. The electrical systems and equipment shall comply with all applicable FMVSS, Federal Motor Carrier Safety Regulations (FMCSR), and shall also conform to all the applicable SAE recommended standards and practices, whether or not specifically referenced in this document, while complying with the subparagraphs herein. ALL ELECTRICAL AND ELECTRONIC COMPONENTS SHALL BE SELECTED TO MINIMIZE ELECTRICAL LOADS THEREBY NOT EXCEEDING

Downloaded from http://www.everyspec.com

THE VEHICLE'S GENERATING SYSTEM CAPACITY. All electrical system components and wiring shall be readily accessible through access panels for checking and maintenance. All switches, indicators, and controls shall be located and installed in a manner that facilitates easy removal and servicing. All exterior housings of lamps, switches, electronic devices, connectors, and fixtures shall be corrosion resistant and weatherproofed.

Electrical fixtures attached to the sides of the ambulance below the 191 cm (75 in.) level shall be near flush mounted and not protrude more than 51 mm (2 in.), except for such items as spotlights and ventilators. All electrical devices and equipment installed, including the electromagnetic coils of high current solenoids, and relays etc, which produce RFI, shall include filters, suppressers, or shielding to prevent electromagnetic radiation and the resultant interference to radios and other electronic equipment (see 3.7.12). Vehicles equipped with electronic engine controls shall be immune from interference caused by radio transmissions.

WARNING: ELECTRICAL LOADS SHALL BE MINIMIZED. ADDITIONAL ELECTRICAL LOADS ABOVE THOSE REQUIRED BY THIS SPECIFICATION SHOULD BE AVOIDED BECAUSE HEAVY LOADS CAUSE ALTERNATOR AND BATTERY FAILURES. FAILURE OF THESE COMPONENTS WILL LIKELY RESULT IN THE AMBULANCE NOT BEING ABLE TO COMPLETE ITS MISSION.

The electrical system shall include patient compartment outlets for 12 volt power (see 3.7.7.3) for medical equipment. A driver compartment console-mounted "module disconnect switch or device" (see 3.7.7.4) shall be provided which controls the equipment as defined in Figure 5, page 87.

3.7.1.1 WARNING INDICATORS.

The electrical system shall incorporate a warning light panel located in the driver's compartment. It shall provide indicator lights for showing: open patient compartment entry door(s) (see 3.10.8); open equipment compartment door(s); and when batteries are turned on by the battery disconnect switch (when furnished) (see 3.7.7). The "Door Open" warning lights shall be red, flash, and approximately 13 mm (1/2 in.) in diameter, or equal, in area. The battery indicator light shall be green with a lens approximately 13 mm (1/2 in.) in diameter, or equal, in area. Electronic displays that are visible in all ambient light, that projects narrative information may be used in lieu of discrete, colored, indicator/warning lights provided the projected message is at least as visible as the basic required warning light and complies with FMVSS 101 for displays.. The use of "high intensity" LEDs in lieu of the 13 mm warning light is acceptable. Warning indicators shall be identified and marked per 3.7.11.

3.7.2 WIRING INSTALLATION.

The ambulance body and accessory electrical equipment shall be served by circuit(s) separate and distinct from vehicle chassis circuits. All wiring provided by the ambulance manufacturer shall be copper and conform to all the SAE J1292 requirements and shall have type SXL or GXL high temperature cross linked polyethylene, or better, insulation conforming to SAE J1127 and J1128. The use of multi conductor or ribbon cables are permitted provided they are not exposed to under hood or under vehicle temperatures/conditions. The wiring shall be

Downloaded from http://www.everyspec.com

permanently color coded or marked the entire length of the wire for identification with easily read numbers and/or letters and routed in conduit or high temperature looms with a rating of 149° C (300° F). When cables are supplied by a component manufacturer to interconnect system components, these cables need not be continuously color coded/identified. They shall be coded/identified at the termination or interconnection points. All added wiring shall be located in accessible, enclosed, protected locations and kept at least 15 cm (6 in.) away from exhaust system components. Electrical wiring and components shall not terminate in the oxygen storage compartment except for the oxygen controlled solenoid, compartment light, and switch plunger or trigger device. Wiring necessarily passing through an oxygen compartment shall be protected from damage (see 3.11.3). All conduits, looms, and wiring shall be secured to the body or frame with insulated metal cable straps in order to prevent sagging and movement which results in chafing, pinching, snagging, or any other damage. All apertures on the vehicle shall be properly grommeted for passing wiring and conform to SAE 1292. All items used for protecting or securing the wiring shall be appropriate for the specific application and be standard automotive, aircraft, marine, or electronic hardware. Cable ties shall not be used to support harnesses, but may be used for bundling purposes.

Electrical panels that are accessible to accidental contact shall have a protective cover, shield, etc. to prevent shorts that can result in injury, fire, or damage to the electrical system.

3.7.2.1 WIRING CRITERIA.

All wiring (including grounds), devices, switches, outlets, etc., except circuit breakers, shall be rated to carry at least 125 percent of the maximum ampere load for which the circuit is protected.

A service loop of wire or harness shall be provided at all electrical components, terminals, and connection points that permits at least two replacements of the wire(s) termination. All splices and terminals provided shall comply with SAE J163, J561, or J928 as applicable. All wiring between the cab/chassis and module in Type I and III ambulances shall be connected to a terminal strip(s), block(s), or multi-pin connector(s) near the point of entry to the patient module. All terminals shall be permanently numbered or coded. Terminal strip(s), block(s), or multi-pin connector(s) shall be readily accessible for checking and service. All exterior wiring to lights or any other component shall utilize sealed connectors or splices.

Circuit Breaker Rating (AMPS) / Minimum Wire Size (AWG)	
10 A - 16 GA	50 A - 6 GA
15 A - 14 GA	75 A - 4 GA
20 A - 12 GA	100 A - 2 GA
30 A - 10 GA	125 A - 0 GA
40 A - 8 GA	150 A - 00 GA

The ambulance electrical system shall incorporate a master circuit breaker panel with circuit breakers or other electronic, non-disposable, current protection devices, in each circuit, which comply with SAE J553 Type I, or Type III (if circuit breaker is readily accessible for resetting by the driver or EMT). When multiconductor cables/ribbon cables are used for low current (self limiting) circuits, additional fuses/circuit breakers are not required. Additionally, one 15 ampere circuit breaker shall be provided for future use. For high current circuits, where SAE Type I breakers are not

Downloaded from http://www.everyspec.com

commercially produced, protection for these circuits may be provided with other types of circuit breakers. All circuit breakers shall be securely mounted, easily removable, and readily accessible for inspection and service. All electrical and electronic components, switches, connectors, circuit breakers, lamps, and indicators, including the vehicle batteries, shall be marked with an easily read identification code number and/or letter. Complete, highly legible, wiring diagrams and schematics, including identification codes and parts list for the ambulance's standard and optional equipment furnished, shall be included in the service manual and be supplied with each ambulance in accordance with paragraph 6.8

3.7.2.2 PRINTED CIRCUITS.

When printed circuits are utilized, they shall conform to SAE J771. Printed circuit boards shall be securely mounted and protected from physical damage and accidental shorts. Printed circuit board connections and components shall conform to all other specification requirements.

3.7.3 GROUNDING.

A. Dedicated grounds for all appliances, circuits, etc. shall be furnished. The use of appliance mounting screws/hardware shall not be used for grounding purposes unless specifically designed for such use by the appliance manufacturer.

B. To provide RF grounding and minimize potential interference with chassis manufacturer's computers, the module and chassis cab shall be connected to the chassis frame with a separate dedicated minimum 19 mm (3/4"), braided ground strap with soldered ends that are secured to cleaned metal surfaces on the body and frame with star washers, etc. To prevent corrosion, both ends of the attached ground strap shall then be sealed with either rustproofing compounds or non-hardening battery terminal sealer. (Note: Regular stranded copper wire, while providing a DC ground, does not provide RF grounding.)

3.7.4 WINDSHIELD WIPERS AND WASHERS.

Vehicle shall be equipped with dual, electric, multi-speed, windshield wipers and washer complying with FMVSS 104. When specified (see 6.2-p), the OEM intermittent wipers shall be furnished.

3.7.5 HORNS.

The chassis manufacturer's dual electric horns shall be furnished. (see siren section for switching arrangements, (3.14.6)).

3.7.6 ELECTRICAL GENERATING SYSTEM (REFERENCE FIGURE 5A or 5B).

Unless otherwise specified (see 6.2-q), the ambulance shall, when available from the chassis manufacturer, be equipped with standard or optional generating system designed for ambulance applications, and shall be nominally rated at 14 volts, with a minimum under hood temperature of 93° C (200° F). As a minimum, the generating system shall be capable of supplying at its regulated voltage, at 93° C (200° F), the continuous electrical load which consists of the following electrical equipment and systems: engine/transmission control system; headlights (low beam); all FMVSS 108 lights; windshield wipers (low speed); cab air conditioning (at coldest setting with highest blower speed); radio in receiving mode (or equal load, if not equipped);

Downloaded from http://www.everyspec.com

patient module dome lighting (in the high intensity setting); patient module air conditioning (at coldest setting with highest blower speed); emergency warning lighting system (in the daytime "primary" mode) (3.8.2); and 20 amp medical load or equal.

WARNING: 1. ADDITIONAL (OPTIONAL), CONTINUOUS LOAD, ELECTRICAL DEVICES OR SYSTEMS, (ADDITIONAL WARNING LIGHTS, ON BOARD 115 VOLT AC SUPPLY, ETC.), ARE PERMITTED, PROVIDING RESERVE OR ADDITIONAL GENERATING CAPACITY IS AVAILABLE OR ADDED.

2. MANUFACTURERS/PURCHASERS SHOULD NOTE THAT THE "COLD", MAXIMUM RPM, OUTPUT RATING OF THE ALTERNATOR MAY BE SUBSTANTIALLY HIGHER THAN THE HOT 93° C (200° F) OPERATIONAL SPEED RATINGS.

The generating system shall supply the maximum electrical load, at the regulated voltage, at 93° C (200° F) under hood temperature, and with an engine speed not exceeding of the furnished engine manufacturer's high idle setting in order to maintain battery charge at the regulated voltage. The throttle control device, specified in 3.7.6.1, shall control the engine RPM necessary to maintain the heating and air conditioning systems, at full operating capacity, and to maintain the generating system's required output when the vehicle is stationary. The 12 volt electrical system shall incorporate an ammeter (see 3.7.6.2), and a voltmeter or voltage warning device (see 3.7.6.3) which are functionally connected as shown in Figure 5A or 5B. The final stage manufacturer/supplier shall test each ambulance prior to delivery and provide, to the purchaser, a written certification (tag) indicating the amount of generating capacity remaining, at the regulated voltage, at 93° C (200° F), after supplying the total electrical load as manufactured (including the purchaser options). Testing and tagging shall be in accordance with "AMD Standard 005, Ambulance Electrical System."

3.7.6.1 ENGINE HIGH-IDLE SPEED CONTROL, AUTOMATIC.

An engine high-idle speed control shall be furnished on all vehicles which automatically increases the engine speed (RPM) to the engine manufacturer's recommended setting to sustain the ambulance's total continuous electrical load at the regulated voltage, and provide maximum heating/air conditioning output. The device shall be preset so that, when activated, it will operate the engine at the appropriate RPM (see 3.7.6). The device shall operate only when switched to the "ON" position and the transmission is in "NEUTRAL", "PARK" and the parking brake is applied (when required by the chassis manufacturer). For transmissions without a "PARK" position, the device shall only function with the transmission in "NEUTRAL" and with the parking brake applied. The device shall disengage when the operator depresses the service brake pedal or the transmission is placed in gear, and automatically re-engages when the service brake is released or when the transmission is placed in neutral or park. The device shall be furnished by the chassis manufacturer when available.

Downloaded from http://www.everyspec.com

NOTE: DIESEL ENGINE MANUFACTURERS STATE THAT THEIR ENGINES SHOULD BE SET AT AN ELEVATED SPEED DURING EXTENDED IDLE PERIODS. ADDITIONALLY, THE ELEVATED IDLE SPEED REDUCES TORSIONAL VIBRATION WHICH CAUSES ALTERNATOR BELT SLIP PAGE.

3.7.6.2 AMMETER.

The electrical system (see Figure 5A or 5B) shall incorporate a center scale ammeter or equivalent electronic digital display which is capable of indicating a current of +/- 150 amperes or greater to exceed the worst case ampere load. The ammeter shunt, Hall Effect, or other current sensing device shall be electrically located in the electrical system to indicate all the current going to (charging) or from (discharging) the vehicle's batteries. When specified, furnished, (see 6.2) or when the chassis manufacturer disallows the cutting of power leads, a "Hall Effect" or other similar current sensing device shall be furnished in place of the ammeter shunt. The shunt or other current monitoring device shall not exceed 150 MV drop at maximum current. The ammeter and shunt, or equivalent device, shall have a combined accuracy of +/- 10 percent of the full scale reading. The meter shall be mounted in a location highly visible to the vehicle operator and shall be illuminated for night operation. The shunt or monitoring device shall be protected against physical damage, weather, road spray, and shall be mounted in an easily accessible location, and shall minimize the length of the power cables.

3.7.6.3 VOLTMETER OR VOLTAGE MONITOR.

A voltmeter, or equivalent electronic device, illuminated for nighttime operation, which constantly monitors the 12 volt electrical system or a warning device and indicates abnormally high or low electrical system voltages, shall be furnished. The device furnished must be mounted so it is clearly visible to the driver at all times.

3.7.7 BATTERY SYSTEM.

Two 12 volt batteries (or additional batteries as required by the chassis manufacturer) for ambulance use shall be furnished. When installed by the chassis manufacturer, a labeled "Battery Disconnect Switch" (or a switch operated solenoid) shall be furnished per Figure 5A. All electrical loads added by the ambulance manufacturer shall be controlled by an illuminated "Module Disconnect" switch or an illuminated, switch controlled, solenoid as shown in Figure 5A or 5B. Unless otherwise specified (see 3.15.3-5), the batteries shall be equivalent to the chassis OEM batteries. When high cycle batteries are specified (Delco / Delphi 1150 or 1151, or equal), ratings for each battery shall not be less than 700 cold cranking amps, and 180 minutes reserve capacity.

Battery ratings shall conform to SAE J537. Batteries shall be located in a ventilated area, sealed off from occupant compartments, and shall be readily accessible for servicing and removal. When batteries are mounted in the engine compartment, they shall be provided with a heat shield as a safeguard against high under hood temperatures.

If the chassis manufacturer furnishes and installs the "Battery Disconnect Switch"(Fig.5A), it shall be clearly visible to the driver, in the seated position. If the switch is not visible, a green indicator light, shall be furnished indicating the batteries are "ON" (see 3.7.1.1).

Downloaded from http://www.everyspec.com

Battery switch / device wiring and added/ modified starting motor circuit wiring shall meet or exceed the SAE J1127 for high temperature SGX wire and SAE J541 for maximum voltage drop requirements for 12 volt heavy-duty applications.

When specified (see 6.2-R), the batteries, on Types I & III vehicles, shall be located in the module, sealed from the interior, or on Type II vehicles, in a compartment or lower skirt. Batteries shall be on a slide out tray or be readily available for service. When relocating batteries, the method of relocation shall be approved by the chassis manufacturer.

NOTES: **1. MODULE BATTERY LOCATIONS CAN PROVIDE FOR IMPROVED FRONT/REAR AND LATERAL WEIGHT DISTRIBUTION AND FOR A LOWER CENTER OF GRAVITY.**

2. PURCHASERS SHOULD SPECIFY A BATTERY CONDITIONER TO RECHARGE WHEN NECESSARY, AND TO MANTAIN CHASSIS BATTERIES IN THEIR FULL STATE OF CHARGE REGARDLESS OF PARASITIC LOADS. (THE BATTERY CONDITIONER WILL RECHARGE PORTABLE EQUIPMENT BATTERIES WITHOUT DRAINING CHASSIS BATTERIES. SEE 3.7.7.2)

3.7.7.1 BATTERY CHARGER OR CONDITIONER.

When specified (see 3.15.3-7), either a 12 volt DC taper type battery charger or automatic charger/conditioner shall be provided. The charger/conditioner shall be listed by an organization meeting the requirements in Paragraph 3.7.8 and connected to the 12 volt DC battery system as shown in Figure 5A or 5B, and Figure 7. The charger shall be capable of supplying a minimum of 10 amperes charging current. The charger/conditioner shall be permanently mounted, in the vehicle, in a properly ventilated, accessible location and wired to the 115 volt AC utility power as specified in 3.7.8 and Figure 6.

When a battery conditioner is provided, it shall monitor the battery state of charge and, as necessary, automatically charge or maintain the batteries without gassing, depleting fluid level, overheating, or overcharging.

3.7.7.2 PORTABLE EQUIPMENT CHARGING CIRCUIT.

A circuit shall be furnished (Figure 7) for charging all portable battery powered devices, i.e. suction units, hand lights, defibrillators, portable radios, etc. This circuit shall prevent discharge of chassis batteries by only permitting the charging of portable devices when the vehicle is either running or the battery conditioner is connected to shore power(operational). Circuit breaker protection shall be provided and shall have a minimum of 10 amp capability. An additional tagged, identified lead shall be furnished in both the cab and module for connection of additional (future) portable equipment that requires recharging. When specified by the purchaser, (see 3.15.3-7) additional leads shall be furnished, and shall be located in areas as designated by the purchaser. A permanently mounted decal or engraved plate shall be furnished in a conspicuous location in the cab stating, “This vehicle is equipped with a battery conditioner to maintain batteries in a full state of charge, and a dedicated 12 volt recharging circuit for portable battery powered equipment. For operation, vehicle shall be plugged into 115 volt AC shore power during periods of non-use”.

Downloaded from http://www.everyspec.com

3.7.7.3 INTERNAL 12 VOLT DC POWER (REFERENCE FIGURE 5A or 5B).

Unless otherwise specified by the purchaser, two automotive "Power Point" type connectors shall be furnished (see 6.2-s),in the patient compartment. Each connector shall be rated for 12 volt DC, 20 ampere capacity, and be on a separately protected circuit. This circuit shall also include a (low voltage drop) "Schottky" diode to isolate medical equipment batteries from any electrical loads that the remainder of the ambulance electrical system may impose. The "Schottky" diode shall be heat-sink mounted, have an inverse voltage rating of at least 45 volts and also be rated to carry the maximum short circuit current, until the circuit breaker opens. The diode shall be physically located in an accessible location and be electrically connected between the circuit breaker and the "action wall" mounted connectors. When specified (see 6.2-s), the receptacles shall be a military type connector of the following generic designation, MS3112E12-3S or its interchangeable commercial equivalent. The polarity of the connector shall be as follows: Pin A (+ 12V), Pin B (Ground), Pin C (not used). The receptacles shall be located on a vertical surface of the "action wall" or other location specified by the purchaser. The mating plug attached to the medical equipment shall be an MS3116F12-3P or its interchangeable commercial equivalent. The polarity for the plug shall be the same as above. Two unwired plugs shall be furnished and tagged with polarity requirements, and shall be plugged into the connectors. (NOTE: These connectors are widely available directly from most major industrial electronics distributors.)

3.7.7.4 MASTER MODULE DISCONNECT SWITCH OR DEVICE.

This switch (see Figure 5A or 5B) shall be located in the driver's compartment, be legibly marked, illuminated when "ON", and rated to carry at least 125 percent of the circuit's maximum current.

3.7.8 115 VOLT OR 115/230 AC UTILITY POWER (REFERENCE FIGURE 6).

Unless otherwise specified, the ambulance shall be furnished with a 2-wire plus ground 115 volt AC wiring system that is separate and distinct from the vehicle's 12 volt DC wiring system(s). The AC electrical system, including wiring and associated equipment, shall comply with AMD Standard 009. Listing shall be by a nationally recognized testing laboratory, recognized by OSHA under Appendix A to 29 CFR 1910.7. The AC system is to be utilized while the vehicle is stationary for powering maintenance devices, medical equipment battery chargers, and when specified (see 3.15.3 & 6.2), vehicle battery conditioner/charger, and any other device(s) deemed necessary by the purchaser. The AC system shall incorporate a ground fault circuit interrupter (GFCI) device and a minimum 15 ampere circuit breaker which can be used as a master AC disconnect switch. The GFCI and circuit breaker may be an integral unit. The AC wiring shall utilize stranded wire in armored cable, nonmetallic sheathed cable, "Type SO" or better flexible cable rated at 600V and 90° C., covered with a minimum 149° C (300° F). flame retardant wire loom, or approved wire in conduit.

When an onboard AC supply is specified (see 3.7.8.3), an automatic transfer switch shall be furnished which turns off this onboard AC supply (interlock) and disconnects its output, when the AC utility power is applied.

When the 12 VDC battery charger (see 3.15.3-7) and any power plant heater(s) (see 3.15.3-16) are furnished and connected to this system, they shall be wired so that they can be energized only from the utility power, and not the onboard AC supply. The onboard AC system shall not be utilized for operational ambulance interior lighting, such as dome and cot lights.

Downloaded from http://www.everyspec.com

3.7.8.1 UTILITY POWER CONNECTOR.

Unless additional capacity is required, a 115 volt AC (male) plug (NEMA 5-15P), rated at 15 amps (similar to a Levitan 4937, Arrow-Hart 527WP or equal), with spring loaded cover assembly suitable for wet locations, shall be installed on the driver's side of the ambulance body in close proximity to driver's door. The connection shall be permanently labeled with the following:

THIS CONNECTION IS FOR 115 VOLT AC, 60 Hz, 15 AMPERE SUPPLY.

NOTE: THE ABOVE LABEL SHALL REFLECT ACTUAL VOLTAGE AND CURRENT CONNECTIONS IF OTHER THAN SHOWN.

This receptacle shall energize the vehicle's internal AC circuit(s) from an external power source (utility power). The purchaser's stationary utility power circuit supplying the ambulance's 115 volt AC power should incorporate ground fault protection. A proper mating, weatherproof, 15 ampere or more when required, female receptacle (NEMA 5-15R) shall also be furnished without cable and tagged specifying the size, type of wire necessary, and the polarity of the future hookup.

3.7.8.2 ELECTRICAL 115 VOLT AC RECEPTACLES.

The patient compartment shall be furnished with a pair of 2 wire plus ground duplex 115 volt AC receptacles. Receptacles shall be near flush, vertically mounted. One outlet shall be located on the primary patient action wall and the other shall located in the right front cabinet / storage area. Both outlets shall be at least 31 cm (12 in.) from any oxygen outlet. An indicator shall be located within each 115 volt AC receptacle as a line monitor indicating a live (hot) circuit. The receptacles shall be labeled with the following: "115 VOLT AC."

3.7.8.3 SOLID STATE INVERTER FOR ON BOARD 115 VOLT AC POWER.

When specified under 3.15.3-6, a DC to AC inverter shall be provided in conjunction with the onboard 115 volt AC wiring system (3.7.8.) The device furnished shall be capable of continuously delivering at least 750 watts of sine wave type regulated AC power to safely power all types of electrical or electronic loads and maintain a frequency of 60 +/-4 Hz. The single phase output sine wave type regulated voltage, with minimal harmonic distortion, shall not rise to more than an RMS value of 135 volts nor drop to less than 105 volts from no load to full load, at an 80 percent power factor, over the 12.8 to 14.8 range of the DC input voltage. The device shall be capable of operating all types of AC loads, including resistive and reactive (either inductive or capacitive) over the temperature range in 3.4.2. The installation shall include an "ON-OFF" switch to activate the device. This switch shall be located on the EMT's control panel or cab console, have a red "ON" indicator, and be labeled with the following: "115 VOLT AC Inverter." A decal shall be provided near this switch, which states that "WHEN OPERATING THE 115 VOLT AC SYSTEM, ALL UNNECESSARY 12 VOLT DC ELECTRICAL LOADS SHOULD BE TURNED OFF." The inverter shall have integral GFCI protection and shall be wired per Figures 5A or 5B, and 6.

Downloaded from http://www.everyspec.com

3.7.9 DRIVER COMPARTMENT CONTROLS.

In addition to the left-hand drive controls and switches, the final stage ambulance manufacturer shall provide and locate, within easy normal reach of the driver, the specified controls and instruments. The battery switch (when furnished), and module disconnect switch or device (see 3.7.7.4) shall be different in feel from each other and be supplied with a handle or knob, which feels different to the touch than the other switches, or be physically isolated from them.

3.7.10 PATIENT COMPARTMENT CONTROLS.

Unless otherwise specified by the purchaser (see 6.2-t), the patient compartment controls, switches, and instruments shall be panel mounted and located within normal reach of the seated EMT (3.10.3).

3.7.11 MARKING OF SWITCHES, INDICATORS, AND CONTROL DEVICES.

All switches, indicators, and control devices supplied by the end product manufacturer of the ambulance shall be clearly visible to the ambulance personnel. They shall be perceptively and permanently identified with at least 12 point letters for the noun or function, and 8 point letters for the remainder of the legend. The identifications shall be contrasting colors etched or engraved in plastic or metal, or printed and laminated in see through plastic, and grouped according to function, and mounted in illuminated or backlit panel(s) or the console.

3.7.12 ELECTROMAGNETIC RADIATION AND SUPPRESSION.

In addition to OEM chassis, all added electrically operated or electrical generating devices, including alternators, air conditioning, warning light systems, electromagnetic coils of high current solenoids and relays, and medical equipment, shall be electromagnetic radiation suppressed, filtered, or shielded to prevent interference to radios and telemetry equipment aboard the vehicle and the surrounding area and shall not exceed SAE J551 limits. Type certification for these devices is acceptable. When specified by the purchaser (see 6.2-u), the completed ambulance vehicle shall be tested and certified to demonstrate that the RFI does not exceed the maximum limits of SAE J551. When specified by the purchaser, electrically operated medical equipment, both installed and portable, furnished shall comply to MIL-STD-461, Interface Standard Requirements for the Control of Electromagnetic Interference Characteristics of Subsystems and Equipment.

3.8 LIGHTING, EXTERIOR AND INTERIOR.

3.8.1 AMBULANCE EXTERIOR LIGHTING.

The basic exterior ambulance lighting shall comply to FMVSS No. 108 and the requirements herein, and include daytime running lights when standard from the chassis manufacturer, amber colored front and rear directional signals and hazard warning lights (except on Type II ambulances, if amber lenses are not available from OEM). The lower front and rear side marker lights shall flash in conjunction with the directional signals. Backup lights/loading light(s), clearance lamps (when applicable), ambulance emergency lights (3.8.2), floodlights (3.8.3), and spotlight(s) (3.8.4) (see Figures 1, 2, and 3), shall be furnished as specified. The ambulance manufacturer shall furnish light assemblies that are stainless steel, plastic, or other weather resistant materials, that are installed in a manner that will not cause electrolysis of light housings or vehicle body.

Downloaded from http://www.everyspec.com

NOTE: TO MINIMIZE ELECTRICAL SYSTEM LOADING AND REDUCE MAINTENANCE, LIGHT EMITTING DIODE (LED) STOP/TAIL, DIRECTIONAL AND MARKER LIGHTS SHALL BE FURNISHED WHEN SPECIFIED BY THE PURCHASER, (SEE 6.2 - FFF) ON MODULAR BODIES.

3.8.2 AMBULANCE EMERGENCY LIGHTING.

As specified (see 6.2-v), a strobe, halogen, HID, LED, or any other source of light for the emergency lighting system shall provide the ambulance with 360 degrees of conspicuity for safety during its missions. The system shall display highly perceptible and attention-getting signals that function in a modal system, and convey the message in the "PRIMARY MODE" - "Clear the Right-of-Way" and in the "SECONDARY MODE" - "Hazard, Vehicle Stopped on Right-of-Way." The ambulance standard warning light system shall not impose a continuous average electrical load exceeding 40 amperes at 14.2 volts and 42 amperes with the optional second amber rear light.

WARNING: PURCHASERS SHOULD NOT SPECIFY WARNING LIGHTS BEYOND THOSE REQUIRED HEREIN. ADDITIONAL LIGHTING WILL UTILIZE RESERVE ALTERNATOR CAPACITY AND COULD RESULT IN OVER LOADED ELECTRICAL SYSTEMS. (SEE WARNINGS IN PARAGRAPHS 3.7.1. AND 3.7.6)

Additional warning lights are not required but, if specified (see 6.2-v), shall not obscure the light output of the standard warning light system. Additional warning light systems furnished shall be separately switched. Any warning devices furnished, in addition to the specified system, shall be compensated for with reserve or additional generating capacity as required in 3.7.6.

3.8.2.1 EMERGENCY LIGHTING SYSTEM CONFIGURATION.

The ambulance standard emergency warning light system shall contain twelve fixed red lights, one fixed clear light and one or two fixed amber or SAE "selective yellow" light(s), (see 6.2-v).

These lights shall function in a dual mode system as shown in Table I below and meet the physical and photometric requirements of 3.8.2.2. The upper body warning lights shall be mounted at the extreme upper corner areas of the ambulance body, below the horizontal roofline. The single clear light shall be centered between the two front facing, red, upper corner lights or in a dedicated housing mounted forward of the body on the cab roof (see Figures 1, 2, and 3). If due to limited body dimensions and physical size of the outboard forward facing lights, the lights may also be mounted in dedicated housings on the cab roof. The standard warning lights shall not be obstructed by doors or other ancillary equipment. The amber light(s) shall be symmetrically located between the two rear facing red lights. The red "grille" lights shall be located at least 76 cm (30 in.) above the ground and below the bottom edge of the windshield and be laterally separated by at least 46 cm (18 in.), measured from centerline to centerline of each lamp. The lateral facing intersection

Downloaded from http://www.everyspec.com

TABLE 1

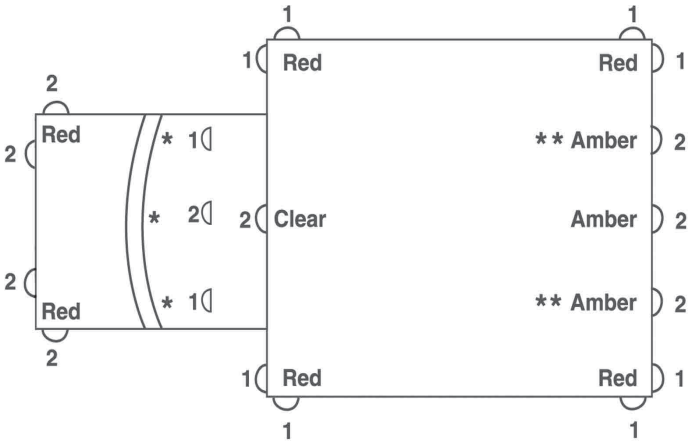

FLASH PATTERN

* Optional forward facing light locations on cab roof for two red and single center clear lights.

** Optional rear amber lights in lieu of single center light.

1 - Indicates lights flashing at the same time.
2 - Indicates lights flashing 180 degrees out of phase with 1.

MINIMUM FLASH ENERGY, Cd-S PER FLASH, PER FIXTURE

COLOR	RED		CLEAR	AMBER
LOCATION	GRILL & FENDERS	UPPER BODY CORNERS	FRONT CENTER	REAR CENTER*
DAY	160 Cd-S @ HV	240 Cd-S @ HV	900 Cd-S @ HV	600 Cd-S @ HV
	80 Cd-S @ $\pm 5^0$ H Points	120 Cd-S @ $\pm 5^0$ H Points	450 Cd-S @ $\pm 5^0$ H Points	300 Cd-S @ $\pm 5^0$ H Points
	12 Cd-S @ All 5^0 V - 45^0 H Points	32 Cd-S @ All 5^0 V - 45^0 H Points	96 Cd-S @ All 5^0 V - 45^0 H Points	72 Cd-S @ All 5^0 V - 45^0 H Points
NIGHT	10 - 30% of the above			

* Single center rear or combined dual rear (Optional)

MODAL EMERGENCY LIGHTING SYSTEM

COLOR & LOCATION / MODE OF OPERATION	RED	CLEAR	AMBER	RED
	Front and Rear Corners	Front Upper Center	Rear Center	Grille and Fender
PRIMARY "Clear the Right-of-Way"	ON	ON	ON	ON
SECONDARY "Hazard-Vehicle Stopped on Right-of-Way""	ON	OFF	ON	OFF

Downloaded from http://www.everyspec.com

lights shall be mounted as close as possible to the front upper edge of each front fender and may be angled forward a maximum of 30 degrees. All warning lights furnished shall be mounted to project their highest intensity beams on the horizontal plane, (see 3.8.2.4).

3.8.2.2 PHOTOMETRIC, CHROMATICITY, AND PHYSICAL REQUIREMENTS.

Each emergency light shall flash 75 to 125 times per minute. The chromaticity values of the lights shall conform to SAE J578, for their respective color, except for the red lights, which in addition may conform to the following expanded boundary limits of: y =0.34; y = 0.32; x = 0.62. All warning lights shall project a beam spread of at least 5 degrees up and 5 degrees down and at least 45 degrees left and right of H-V. Each light shall produce flash energy, (Cd-s) per flash, measured from the H-V to all the extreme test point coordinates and shall be tested at all 5° increments. At no point shall the Cd-s values drop to less than the minimum values as shown in the table above when tested at 14.2 volts. Flash energy shall be determined in accordance with the SAE J845 method for determining the flash energy of a light. Testing shall be conducted on the device(s) as manufactured including use of the actual light source and all other related system components.

3.8.2.3 SWITCHING ARRANGEMENTS.

The emergency light switches shall be wired and arranged to provide the warning light signal modes and combinations as specified. All emergency light switches shall be labeled (see 3.7.11) and each Primary/Secondary mode switch shall have an amber or red indicator light to show the driver which mode is activated. When strobe lights are furnished or, when specified (see 6.2-v) for incandescent lights, a day-night switch shall be provided. When specified (see 6.2-v) from the lighting system manufacturer, an automatic switch to the ”Secondary Mode” when the gear selector is placed in the “Park/ Neutral” position, with a manual override to the “Primary Mode” shall be furnished. Additionally, when specified (see 6.2-v) from the lighting system manufacturer, the lighting system shall provide an ambient light sensing circuit to automatically switch to the ”Night” position while in the ”Secondary Mode”. A manual override to the daytime (bright) mode shall be provided. Operators manual (3.20) shall include suggestive management instructions for the warning systems.

3.8.2.4 HARDWARE CONSTRUCTION AND INSTALLATION.

The emergency lighting system shall be comprised of components and devices that comply to the general requirements and tests of SAE J575g, J576d, J578, and J551, as applicable for the unit. Warning lights shall be firmly fastened to reinforced body surfaces in accordance with the lighting manufacturer’s requirements and recommendations and include aiming wedges to compensate for sloped body surfaces, grill, hood and fender angles or mold release angles on roof caps. The ambulance manufacturer shall aim the lights to assure that all lighting performance requirements herein are met. The lights shall be aimed either mechanically or optically on the horizontal axis with a tolerance of +0 degrees to -3 degrees. All switches, connectors, and wiring shall be rated to carry a minimum of 125 percent of their maximum ampere load. When halogen or other long duty cycle light source is used, the duty cycle of any device shall not exceed 50 percent. When strobe lights are furnished, all high voltage leads and connections shall be insulated and enclosed, or weather proof connectors, with the proper voltage rating shall be used.

Downloaded from http://www.everyspec.com

3.8.2.5 TESTS, WARNING LIGHT SYSTEM.

The lighting manufacturers shall furnish and certify or the ambulance manufacturer shall measure and record the total average current load of the standard emergency warning light system on the vehicle as manufactured at the regulated voltage of 14.2 V, when operated in the mode which draws maximum current. This load current test shall be conducted during the "ambulance's electrical system test" (3.7.6 and AMD Std. 005). The warning light system and related components and devices shall conform to temperature conditions in 3.4.2 and be tested and approved by an Automotive Manufacturers Equipment Compliance Agency (AMECA) accredited laboratory independent from the lighting device manufacturer's own labs and listed with the AMECA for compliance with the requirements in this specification.

3.8.3 FLOOD AND LOADING LIGHT (EXTERIOR).

Flood and loading lights shall be not less than 191 cm (75 in.) above the ground and unobstructed by open doors. Floodlights shall be located on the sides, and a patient loading light on the rear of the ambulance. They shall be firmly fastened to reinforced body surfaces, below the roofline. When specified by the purchaser (see 6.2-w) two flood lights shall be furnished on each side, and two patient loading lights shall be furnished on the rear. These flood lights shall be mounted on fixed body surfaces, and should have the maximum possible spacing between them. The lamp(s) H-V shall be projected downward, either mechanically or optically, at an angle of 12 to 18 degrees from the horizontal plane and the lighting on each side of the ambulance shall provide a minimum of 800 beam candle power and produce a flood light pattern similar to a H7619 sealed beam lamp. Floodlight switches shall be located on the cab console and control each side independently. Loading light(s) shall provide a minimum of 500 candle power beam and shall illuminate the area surrounding the back loading doors. The light(s) shall produce a light pattern equivalent to a 4406 sealed beam. Loading light(s) shall automatically be activated when rear doors are opened and may be incorporated with the FMVSS backup lighting system.

3.8.4 SPOTLIGHT.

A hand held spotlight shall be provided with a minimum 100,000 CP lamp, corrosion-proof housing with momentary switch, and minimum 244 cm (8 ft.) heavy-duty coiled cord. It shall be hard wired to the vehicle 12 volt DC system (for anti-theft reasons) and stowed in a holder in a compartment/area, accessible to the driver and passenger. When specified (see 3.15.3-25), a remote controlled spotlight shall be furnished, having an "ON"/ "OFF" panel switch and variable speed fingertip control. Searchlight shall be a minimum 13 cm (5 in.) diameter, 100,000 CP sealed beam. Lights shall be operable over 360 degrees horizontal sweep and approximately 90 degrees vertical range. Remote control, exterior, light housings shall be chrome plated, bronze, brass, or other materials with intrinsically corrosion resistant construction.

3.8.5 AMBULANCE INTERIOR LIGHTING.

The basic interior ambulance lighting configuration shall be designed to minimize electrical loads and include: A driver's compartment dome light; instrument panel lights; master switch panel; and console light(s). When specified (see 3.15.3-33), a map light for the front seat passenger shall be furnished. Lighting shall be designed and located so that no glare is reflected into the driver's eyes or his line of vision, from switch control panels or other

Downloaded from http://www.everyspec.com

areas that are illuminated while the vehicle is in motion. The patient compartment dome lighting (3.8.5.1) shall be sufficient to illuminate the step-well (3.10.12). The EMT's control panel shall be separately illuminated. All lights shall have lamp shells and housings grounded.

3.8.5.1 PATIENT COMPARTMENT ILLUMINATION.

Normal white illumination (dome and EMT's switch panel lighting) in the patient compartment shall not be less than 15 foot candle intensity, measured along the centerline of the clear floor without any outside ambient light. The primary cot shall be provided with a minimum of 35 foot candles of illumination measured on at least 90 percent of the cot's surface area. Blue light(s) or lenses shall not be used. Patient compartment lights shall not be powered by the vehicle's 115 volt AC system if so equipped. The patient compartment dome lighting (in the dim setting) and loading lamp(s) shall be automatically activated when the patient compartment doors are opened. All interior dome lighting, including "checkout" lights, shall be near flush mounted and not protrude more than 3.8 cm (1.5 in.). The use of fluorescent lighting which operates on 12 volts DC, meets the above performance and interference requirements of paragraph 3.7.12, can be used in lieu of incandescent lighting. Fluorescent fixture(s) shall have a removable cover that positively locks in place. The fluorescent tube shall be positively locked in place to preclude loosening due to vehicle movement or vibration.

Dome lighting shall not consume more than 15 amps in the bright setting and shall have two separately protected and controlled circuits. Switches, electronic controls, or fireproofed rheostats may be used to control lighting.

3.8.5.2 PATIENT COMPARTMENT "CHECKOUT LIGHTS".

When specified (see 3.15.3-9), two "patient compartment checkout lights" shall be furnished with 6 candle power lamps, or equal, and 5 minute timer switch that is wired directly to the ammeter shunt (battery side of load disconnect switch). (See Figure 5A and 5B). One of the light fixtures shall be located towards the front of the patient compartment and one towards the rear. The checkout lights may be integrated into the standard patient compartment lighting by activating two of the lamps in the "dim" circuit.

NOTE: USE OF CHECKOUT LIGHTS MINIMIZES BATTERY CYCLING, PRECLUDES THE NECESSITY FOR TURNING ON BATTERIES, AND USE OF HIGHER POWER COMPARTMENT LIGHTING.

3.9 CAB-BODY DRIVER COMPARTMENT AND EQUIPMENT.

3.9.1 DRIVER'S COMPARTMENT, CAB-BODY STRUCTURE.

All cab compartments shall be of sufficient size to accommodate a driver and assistant, with space to perform driving and control activities. The cab (Type I) or the cab-body (Types II and III) shall be organized and designed with the specified and required equipment and accessories for ease of operation and safety.

Downloaded from http://www.everyspec.com

The partition and door, when provided between cab and patient compartment on Type II and Type III vehicles, shall not interfere with or restrict the OEM's full range of front seat adjustment.

The cab and cab-body shall comply with Federal Motor Vehicle Safety Standards 101, 102, 103, 104, 105, 107, 108, 111, 113, 115, 120, 124, 205, 206, 207, 208, 209, 210, 211, 212, 219, 301, and 302. Types II and III vehicles, of the integral cab-body design, shall be equipped with front doors and window openings equal to the Type I conventional truck cab and conform to 3.9.2 thru 3.9.8. All ambulance Types shall be provided with a partition between the cab or driver's compartment and the patient's compartment (see 3.10.2 and 3.10.15).

3.9.2 CAB-BODY PROVISIONS.

Cab-body section shall provide a right and left side, weatherproofed, forward hinged door with opening side windows and, when available from the OEM: crank or push open vent windows; door stops; external key operated door locks with two sets of keys; trim or closed panels and headliner (washable vinyl upholstery, or flooring type materials); floor covering (OEM's heat, noise and appearance trim packages); panel mounted instruments; and seat(s). All exposed interior surfaces shall be painted. Hardware and other exterior exposed metal trim shall be chrome plated, stainless steel, or anodized aluminum. When specified by the purchaser (see 3.10.15.2 and 3.15.3-29), a console shall be furnished that will contain a map book, clip board, radio control head(s) speaker(s), etc. The console shall be furnished per purchaser's specifications. Additionally, the vehicle shall be furnished with at least the following equipment:

a. Dual sun visors (padded).

b. Armrests, mounted on each side door.

c. Compartment ventilation, other than windows.

d. Key operated ignition/starter switch.

e. Ammeter and voltmeter (see 3.7.6.2 and 3.7.6.3).

f. Fuel gauge(s).

g. Oil pressure gauge.

h. Engine temperature gauge.

i. Speedometer with odometer.

j. Environmental controls (heater-defroster/air conditioner, etc.).

k. Seatbelts and shoulder harness for driver and passenger, when available from chassis manufacturer.

l. Dual outside mirrors (3.9.5).

m. Cab lighting and controls.

n. Tinted windshield.

o. Dual electric horn(s).

p. Throttle control (see 3.7.6.1).

Downloaded from http://www.everyspec.com

3.9.3 CAB COMPARTMENT DRIVER AND ASSISTANT SEAT.

Unless otherwise specified (see 6.2-x), the driver's compartment shall be furnished with at least two individual bucket-type seats (driver and assistant) or, when specified (see 6.2-x), bench style seating for three. The seats shall be frame constructed with cushioned springs or foam rubber, padded and upholstered to provide maximum riding comfort. Unless otherwise specified (see 6.2-x), the seats shall be covered with fire-retardant (per FMVSS-302), washable, non-absorbent material. Driver's seat shall have the OEM's full, unobstructed range of longitudinal adjustment, and a minimum of 30 percent of the range of inclination, but not less than the angle furnished on the chassis manufacturer's standard non-reclining high back seat.

3.9.4 CONTROLS AND OPERATING MECHANISM.

All controls and operating mechanisms shall be located for left-hand drive. Lever controls, equipment, items, and devices shall be installed, located, and stowed for the convenience of the purpose intended and shall not interfere with the ambulance personnel or patient's ingress or egress of respective compartments.

3.9.5 OUTSIDE REARVIEW MIRRORS.

Unless otherwise specified (see 6.2-y), dual, firmly secured, vibrationless, rearview mirrors, having a combination flat/convex mirror system, shall be furnished. Convex shall be a minimum 13 cm (5 in.) diameter [appox.130 sq. cm, (20 sq. in.)]. Mirrors shall have the largest usable reflective area practical for the designed ambulance, totaling at least 806 square centimeters (125 square in.) per vehicle. Unless the mirror assembly is manufactured as an integral assembly, all four mirror head faces shall be independently adjustable. Hardware and mirror heads shall be chromed, polished stainless steel, or polished aluminum.

3.9.6 BUMPERS AND STEPS.

Chassis manufacturer's standard chrome bumper shall be furnished in the front of the chassis. The rear of the ambulance shall be furnished with a sturdy, full-width, rear bumper, with step secured to the vehicle's chassis-frame. The rear bumper and step shall be adequate to support a test weight of 227 kg (500 pounds) without flexing. A step shall be furnished at the back (loading) door opening, if the patient compartment floor is more than 46 cm (18 in.) above the ground. Unless otherwise specified by the purchaser for Class 2 vehicles (see 6.2-z), the step installation shall be equal distance +/- 5 cm (2 in.) between the ground and the floor. The bumper-step shall be designed to prevent the accumulation of mud, ice, or snow and made of anti-skid open grating metal (a folding style step if specified in 3.15.3-21). These steps shall not be located or exposed to the interior of the ambulance when the door(s) are closed. All necessary steps shall be at least the width of the door opening for which they are provided. The step's tread shall have a minimum depth of 13 cm (5 in.) and a maximum depth of 25 cm (10 in.). If the step protrudes more than 18 cm (7 in.) from the rear of the vehicle, a foldup step shall be furnished.

3.9.6.1 OVERRIDE FRONT GRILLE GUARD.

When specified and permitted by the chassis manufacturer (see 3.15.3-22), an override protection (high-rise heavy-duty grille guard) shall be furnished to protect the vehicle grille, siren speakers, grill lights, radiator, and air conditioner condenser. The heavy-duty grille guard shall be custom fit to the front bumper and bolted to the vehicle frame. The grille guard shall be of all steel

Downloaded from http://www.everyspec.com

construction with not less than 9.5 mm 10 mm (3/8") thick side plates and two horizontal 5.0 cm (2 in.) diameter tube crossmembers. The grille guard shall be of a height to extend from the bottom edge of the front bumper to not less than 20.3 cm (8 in.) above the top edge. Unless otherwise stated in ordering data, the grille guard shall be chrome plated or painted to match the vehicle exterior color.

WARNING: PURCHASERS SHOULD BE AWARE THAT GRILLE GUARDS ADD ADDITIONAL FRONT END WEIGHT AND SHOULD NOT BE ORDERED UNLESS ABSOLUTELY NECESSARY.

3.9.6.2 BUMPER GUARDS.

When specified and permitted by the chassis manufacturer (3.15.3-22) or required for protection of grille mount siren speakers which extend beyond the face of the bumper, a set of bumper guards shall be furnished. Bumper guards shall be rubber faced, 30 cm (12 in.) to 36†cm (14 in.) high, polished aluminum, chromed steel, or polished stainless steel. They shall bolt or clamp to the bumper or chassis, and shall protect the bumper, siren speakers, grill lights, etc.

3.9.7 BODY PROTECTION.

3.9.7.1 FENDERS.

Fenders and wheel housings (see 3.10.13) shall be provided to cover all tires. Fender extension(s) over dual rear tires are permitted on ambulance bodies to cover tires, providing they are less than 20 cm (8 in.) wide, reinforced, secured, and may be painted black, unless polished metal is specified (see 3.4.11.2 and 6.2-aa).

3.9.7.2 RUNNING BOARDS.

When specified (see 3.15.3-30), bright finish, aluminum running boards shall be provided from the rear of the front wheel opening to the rear of the cab (Type I); to the front of the rear wheel opening (Type II); and to the front of the modular body (Type III). All running boards shall be securely attached to the cab and/or body, as required, and include nonmetallic spacers to prevent contact of dissimilar metals and prevent trapping of dirt and water between the running board and the cab body. All running boards shall be gusseted and provide brackets to prevent flexing, sagging, and damage. Design of the running boards may incorporate mud flaps. Running board installation shall conform to chassis manufacturer's recommendation.

3.9.7.3 MUD FLAPS.

When specified (see 3.15.3-31, mud flaps, at least as wide as the tire(s), shall be provided per SAE J682 behind the front and rear wheels and shall be reinforced at the point of attachment to the vehicle. Mud flaps may be incorporated into the running boards.

3.9.7.4 MUD/STONE GUARDS.

When specified (see 3.15.3-15), bright finish, aluminum diamond plate shall be provided to protect the lower part of Type I and Type III ambulances.

Downloaded from http://www.everyspec.com

3.9.7.5 RUB RAIL.

When specified on Type I and III bodies (see 3.15.3-19), a body rub rail, minimum 25.4 mm (1") thick x 50.8 mm (2") wide, shall be provided that extends the full length of the right and left sides of the lower third section of the module. The rub rail shall be firmly attached to the body.

3.9.7.6 FUEL FILL SPLASH PLATES.

The painted surface of the ambulance body shall be protected from discoloration due to spilled fuel during refueling. Protection shall be provided by a drain in the fuel fill housing(s) or by splash plate(s) under the fuel fill opening.

3.9.8 ENGINE HOOD.

Engine hood and cowl shall be fitted to prevent precipitation, heat, odors, and noise from entering the interior of the cab and body. Cab compartment engine covers, on Types II and III ambulances, shall be removable for easy access to engine and components.

3.9.9 CAB CONNECTING BELLOWS FOR TYPE I VEHICLE.

A flexible, weather-tight bellows, fabricated from EPDM, Hypalon, sheet or molded rubber, or other durable materials that meet the temperature requirements herein and resist ozone, sunlight, oil, fungus, and will not crack, rot or deteriorate, shall be provided between the Type I cab and the modular body. Bellows shall be designed for proper fit and finish and be able to absorb lateral, vertical, and torsional displacement due to body/cab movement. Window in the cab or body shall be of the sliding type, shall be aligned, and connect with the modular body window opening (see 3.10.2, 3.10.14 and 3.10.15) and shall conform to requirements of the partition.

3.10 AMBULANCE BODY AND PATIENT AREA.

3.10.1 BODY ACCOMMODATIONS.

The ambulance body and patient compartment shall be sufficient in size to transport occupants, as specified in Configuration A or B (see 3.1.5), and accommodate and store all the stretchers, cots, and litters through the range of dimensions as specified in Table II. There shall be space around the patients to permit a technician to administer life support treatment to at least one patient during transit (see dimensional parameters 3.10.4).

Downloaded from http://www.everyspec.com

TABLE II AMBULANCE STRETCHERS, COTS, AND LITTERS			
Stretchers, Cots, and Litters	**Length Minimum**	**Dimensions cm/In. Width Minimum**	**Bed Height Maximum (Collapsed)**
Style 1 —Wheeled Cot (Elevating)	191/75	56/22	38/15*
Style 2 —Wheeled Cot (Elevating with Additional Front Roll-In Wheels)	200/79	33/13	56/22
Style 3 —Folding Stretcher or Combination Stretcher Chair	189/73.5	48/19	21/8.25
Style 4 —Navy Stokes Litter (Resting On Floor)	215/84.75	60/23.5	19/7.5
Style 5 —Standard Army and NATO Litters (With Poles) **	227/90	58/23	17/6.75

Notes: * Measured to top of positioned 7.6 cm (3 in.) thick mattress.
** Dimensions of Army and NATO litters are in accordance with North Atlantic Treaty Organization, Standardization agreement STANAG No. 2040.

3.10.2 CAB/PATIENT COMPARTMENT ACCESS WINDOW.

The ambulance and body bulkheads shall have an aligned window opening of at least 968 square centimeters (150 square in.), for visual checking and voice communications between the cab and the patient's compartment for Type I vehicles and, when specified (see 3.10.15.2), in lieu of walkthru door on Types II & III. The window shall be latchable from the cab side and shall be an adjustable, transparent, shatterproof panel (see 3.9.9 and 3.10.14).

3.10.3 EMERGENCY MEDICAL TECHNICIAN (EMT) SEATING.

The EMT shall be provided with a seat conforming to FMVSS 207, when applicable FMVSS 210, and be equipped with a safety belt and a padded back and a padded headrest. Unless otherwise specified (see 6.2-bb), the seat shall be not less than 46 cm (18 in.) deep by 46 cm (18 in.) wide and 38 to 46 cm (15 to 18 in.) high, measured to the top of the seat cushion (see 3.11.1.1) and adjustable a minimum of 10 cm (4 in.) (front to rear) when a bucket type seat is furnished. The EMT shall be seated at the head of the primary patient, near the bulkhead or partition behind cab compartment, facing rearward (see 3.1.5.) The space under the seat may be designed as a storage compartment or utilized for other equipment. The EMT seat shall be upholstered per 3.11.4. When an ambulance manufacturer's fabricated seat is furnished, the padded backrest shall be the maximum practical width and height. When specified and available (see 6.2-BB), an EMT seat with integral infant/child safety seat shall be furnished and conform with all requirements including FMVSS 213.

Downloaded from http://www.everyspec.com

3.10.4 PATIENT COMPARTMENT INTERIOR DIMENSIONAL PARAMETERS.

The patient compartment shall provide, but not be limited to, a minimum of 9.2 cubic meters (325 cubic feet) of space, less 1 cubic meter (35 cubic feet) for cabinets, while complying with the following:

Length: Unless otherwise specified or permitted by the purchaser (see 6.2-cc), length, measured from the partition to the inside edge of the rear loading doors at the floor, shall be at least 310 cm (122 in.). This length in the compartment shall provide at least 64 cm (25 in.) and not more than 76 cm (30 in.) of unobstructed space at the head of the primary patient, measured from the face of the backrest of the EMT seat to the forward edge of the cot. A minimum of 25 cm (10 in.) shall be provided, from the end of the mattress to the rear loading doors, to permit clearance for traction or long board splints.

Width: The width of the compartment, after installation of the cabinets, shall provide 46 cm (18 in.) +/- 15 cm (6 in.) of clear aisle walkway between cot and base of squad bench, with the cot located in the street side (non-centered) position. Height: Unless otherwise specified by the purchaser (see 6.2-dd), the patient compartment shall provide at least 152 cm (60 in.) height, over the primary patient area, measured from floor to ceiling panels.

3.10.5 BODY, GENERAL CONSTRUCTION.

For modular construction, the body shall be all welded aluminum or, when specified or approved by the purchaser (see 6.2-ee), other lightweight, inherently corrosion resistant materials of equal, or greater, strength. The exterior of the body shall be finished smooth with symmetrically radiused corners and edges, including rub-rails when specified (see 3.15.3-19), and shall include doors and windows specified herein. Ambulance body, as a unit, shall be designed and built to provide impact and patient compartment penetration resistance and shall be of sufficient strength to support the entire weight of the fully loaded vehicle on its top or side, if overturned, without separation of joints or permanently deforming roof bow or reinforcements, body posts, doors, stringers, floor, inner linings, outer panels, rub-rails, and other reinforcements. Wood, or wood products, shall not be used for structural framing. As evidence that the ambulance body meets the above criteria, the manufacturers body (fabricated, modified, or converted), excluding the conventional cab, shall furnish for each body model (Type) a certification that the ambulance body meets Static Load Test for Ambulance Body Structure, AMD Standard No. 001.

Additionally, the roof structure, liner, and outer skin or cap shall be designed and constructed to prevent separation and the possible ejection of patients or crew in the event of an accident and shall include welded and, if necessary, reinforced attachments to the body.

WARNING: ANY ABSORBENT MATERIAL SUCH AS CARPETING, FABRIC, OR INSIDE/OUTSIDE PLASTIC TYPE CARPETING, ETC. THAT RESISTS CLEANING AND DECONTAMINATION SHALL NOT BE USED IN ANY STORAGE OR PATIENT COMPARTMENT.

3.10.6 AMBULANCE BODY STRUCTURE.

All parts of the ambulance body and attachments shall be fastened with rust-resistant fasteners in a manner which will preclude loosening. Cabinets, benches, partitions, oxygen cylinder holders, guide rails, and cot holders shall be attached to metal tapping plates and/or framing welded to

Downloaded from http://www.everyspec.com

the body structure. These components shall be fastened by welding, bolting, or self-tapping (threading) machine screws, on at least 46 cm (18 in.) centers or less, as applicable to the component being installed. Sheet metal, self-tapping wood/metal screws, nails, staples, etc. shall not be used in assembling the ambulance structure, except for self-threading sheet metal screws used for light trim panels and for retention of wood or composite sub-flooring.

Vehicles furnished with fiberglass/plastic, exterior roof panel shall have the center section embedded with metal wire screening (see 3.14.3 for a radio antenna ground plane). Ambulance bodies with an extended roof shall have the roof structural members permanently fastened to structural members of the body (welded, bolted, and sealed) to prevent separation in an accident. Body structure shall, as necessary, include gusseting to provide diagonal strength. Drip rail(s) shall be provided around the entire modular body and have drain points at each corner. Drip rails shall also be furnished over each entry and compartment door. When structure permits, drip rail shall extend 2.5 cm (1 in.) beyond the edge of the doors.

Body skirt(s) shall not extend more than 8 cm (3 in.) below the vehicle cab/body. The body, roof, and panel joints shall be watertight. All openings between the chassis-body and occupant carrying compartments, including the bulkhead between cab and body of Type I and III (see 3.9.9), shall be sealed to prevent intrusion of water, dust, and exhaust gases.

3.10.7 BODY MOUNTING.

On Types I and III ambulance bodies, to reduce stress on body and frame, minimize height above the frame, and isolate the patient compartment from noise and vibration, full floating, automotive style, rubber body mounts or other chassis manufacturer's approved body mounting systems shall be furnished with a minimum four per side on bodies up to 371 cm (146 in.) and five per side on bodies over 371 cm (146 in.). Reinforcements or filler blocks shall be used where mounting device(s) may deform frame flanges. Mounting devices shall be locked units which will minimize loosening, but which may be re-tightened, if necessary. Modular bodies shall be interchangeable with other chassis of the same manufacturer having the same cab to axle (CA) dimension (reference 3.5.6).

3.10.8 DOORS.

Two patient compartment door openings shall be provided. There shall be a door opening on the right forward side, and at the rear of the body for loading a patient on a cot. The side opening shall have a single forward hinged or sliding door for Types I and III, double hinged doors for Type II, or if specified (see 6.2-ff) a sliding type door for Type II vehicles shall be furnished. Door(s) shall provide a minimum right side clear opening of 76 cm (30 in.) wide and of 160 cm (63 in.) high for Types I and III and the chassis manufacturer's standard opening for Type II vehicles. Should the rear doors be rendered inoperable, the side door and interior configuration shall permit emergency removal of the patient either on a backboard or other device used for spinal immobilization. Unless otherwise specified (see 6.2-ff), e.g. wide offset, rear loading door(s) shall cover a clear opening of not less than 117 cm (46 in.) in height for Type II and a minimum height of 117 cm (46 in.) for Types I & III and 112 cm (44 in.) in width for Types I and III and the chassis manufacturer's standard opening for Type II vehicles. All ambulance body doors shall be equipped with not less than 1613 sq. cm (250 square in.) of safety glass area per door. Doors shall be designed for easy release and meet the requirements of 3.10.9. A "Door-Open" warning

Downloaded from http://www.everyspec.com

device shall signal (indicate in the cab) when doors are not closed (see 3.7.1.1). Each door shall have effective compression or overlapping seals to prevent leakage of exhaust fumes, dust, water, and air. Doors may contain and be equipped with recessed compartments as applicable to the interior for storage of supplies and devices.

Patient compartment doors, on Types I & III, shall be flush or near flush style, full box type construction with removable inner panel. Inner panel shall be finished with a durable, washable type material and include trim moldings around all unfinished, exposed edges.

A red light or reflector, minimum 7.6 cm (3 in.) diameter, shall be installed, one on the interior surface of the side, and each rear door. The reflectors shall be so positioned as to provide maximum visibility when the doors are in the fully open position. At the manufacturer's option, red reflective tape, with the equivalent surface area, conforming to FMVSS 108 may be furnished in lieu of the reflector.

3.10.8.1 PROTECTION OF PATIENTS AND CREW.

Upholstered padding/cushions shall be provided at the upper interior areas of the door frames. Similar padding/cushions shall also be furnished at other areas that may be capable of causing injury.

3.10.9 DOOR LATCHES, HINGES, AND HARDWARE.

Door latches, hinges, and hardware furnished by chassis and ambulance manufacturers shall comply with FMVSS 206. When doors are open, the hinges, latches, and door-checks shall not protrude into the access area. All doors shall have hardware or devices to prevent inadvertent opening and closing. To facilitate entry and exit from the vehicle, a minimum 15 cm (6 in.), tubular or semi-oval, minimum 19 mm (3/4") wide (diameter), grab handle shall be provided on the inside of each door or the adjacent body structure (in addition to a door operating handle). Door stops, to prevent damage to body sides, and a handle with latches, operable from inside (even if key locked externally) and from outside of the body after unlocking, shall be furnished. One external operated lock, with key per door opening, shall be provided. All patient compartment door locks shall be identically keyed. Hardware shall be chrome plated, bright finish, stainless steel, anodized aluminum, or other powder coated metal. Inside door latch handles shall be designed and placed so they cannot be operated when accidentally hit or used as a grab handle. Ambulance body, side and rear door hardware, installed by the ambulance body manufacturer, shall be tested to ensure installation meets or exceeds the requirements of AMD Standard 002 - Body and Door Retention Components Tests.

3.10.10 FLOOR.

Floor shall be at the lowest level permitted by the chassis/body, but not exceed the height permitted in 3.4.11.7. It shall be flat, except when the area near the rear entrance door is sloped for a lower entering height, and with the exception of cot related hardware, shall be unencumbered in the door(s) access and work area. All floor areas shall withstand a distributed load of 73 kg/ 1000 sq. cm (150 lbs./sq. ft.). Metal floors shall be reinforced to eliminate "oil canning" and insulated against outside heat and cold. The subfloor of the Types I and III patient compartment shall be water resistant. When plywood is utilized, it shall be water resistant, not less than 13 mm (1/2 in.) thick, 5 ply minimum, and be supported by body framework. Under the subfloor of the Type I and III vehicles shall be a aluminum heatshield/ splash pan, minimum 1.3 mm (0.050"),

Downloaded from http://www.everyspec.com

with silicone or other non-hardening sealant evenly distributed around it's perimeter. The subfloor of the Type II patient compartment shall be not less than 13 mm (1/2 in.) thick density, marine or exterior grade plywood. Fiberglass, aluminum, or other non-hydroscopic composites, with at least the equivalent strength of plywood may be used as the subfloor. Particle board or equivalent type materials are not acceptable. Additionally, noise/thermal insulation shall be provided under the floor as necessary.

Voids or pockets, where water or moisture can become trapped to cause rotting and unsanitary conditions, are not acceptable. Voids and pockets shall be filled with sealer or caulking compound. Flooring shall extend the full length and width of the patient compartment or body (including space under the cabinets, unless otherwise insulated).

3.10.11 FLOOR COVERINGS AND COLOR.

Floor covering shall be easily cleaned, sanitized, and harmonize with the interior color and decor of the patient compartment. The floor covering shall be seamless, one piece, no wax type, solid linoleum, vinyl, or poured epoxy or acrylic not less than 1.6 mm (1/16 in.) thick and permanently applied to the subfloor. The floor material shall cover the entire length and width of the compartment's working area. The covering of joints (corners, etc.), where the sidewalls and covering meet, shall be sealed and bordered with corrosion resistant cove molding or the covering shall extent at least 7.6 cm (3 in.) up the sidewalls. Cabinets at floor level shall be finished with floor covering material. Floor covering shall comply with FMVSS 302.

3.10.12 STEPWELL (SIDE DOOR).

Steps shall be provided in the door openings, if the floor is more than 46 cm (18 in.) above the ground. Stepwell, when applicable, shall be the enclosed two-step type. Height of the bottom step shall not exceed 46 cm +/- 5 cm (18 +/- 2 in.) (Types I and III vehicles), and 56 cm (22 in.) (Type II) with the exception of Class 2 vehicles. Stepwells shall be lighted by interior lights and all step surfaces shall be fabricated from reinforced, bright finish, aluminum diamond plate or covered with anti-slip material.

3.10.13 WHEELHOUSINGS.

Wheel housings of Type I and III vehicles shall include metal or plastic splash shields between the body wheel housing and the wheel(s) (see 3.9.7) extending over the top of the tires to the bottom of the body side skirting. Wheel house openings shall comply with SAE J683 to allow for tire chain usage and easy tire removal and service. Chassis manufacturer's standard wheel housings will be acceptable. Wheel housings shall be undercoated or rustproofed.

3.10.14 WINDOWS.

Glazing shall comply to FMVSS 205 and unless otherwise specified (see 3.15.3-12), the patient's compartment shall not have windows, except the viewing panel in the partition or bulkhead(s) (see 3.10.15) and in the side and rear doors (see 3.10.8). All windows shall be tinted and when specified (see 6.2-gg), upper windows shall open and, when vertical windows are furnished, shall have provisions to prevent accidental closure.

Downloaded from http://www.everyspec.com

3.10.15 BULKHEAD/ PARTITION FOR TYPE II AND III VEHICLES.

A full height and width partition or bulkhead (with or without compartments), having rollbar characteristics and a walkthru opening with a door shall be placed between the driver and patient's compartment. This partition shall be located directly behind the driver and companion seats when in the rearmost position. The partition shall be secured on the sides, ceiling, and floor by welding or bolting to tapping plates.

3.10.15.1 DOOR / WALKTHRU.

Unless otherwise specified by the purchaser to delete walkthru or to specify or approve alternate door opening dimensions (see 6.2-hh), the door opening shall be at least 43 cm (17 in.) wide and 117 cm (46 in.) high and shall provide an aisle between the compartments. The door shall have at least a 968 sq. cm (150 square in.), transparent, shatterproof viewing panel in the center section at the driver's eye level. The door shall be secured with a driver's side self-latching device in the open and closed positions. (see 3.10.2).

3.10.15.2 WALKTHRU DELETION.

When specified (see 6.2-hh), the partition door shall be deleted and a window, as specified in 3.10.2, shall be furnished. When specified (see 6.2-hh), additional compartments shall also be furnished in the space normally occupied by the door opening, including the area above the required pass thru window. Further, a console (see 3.15.3-29) may be specified between the driver and passenger seat.

NOTE: PURCHASER SHOULD CONSIDER DELETING THE WALKTHRU BECAUSE, IN ADDITION TO PROVIDING INCREASED SPACE FOR COMPARTMENTS AND THE CAPABILITY OF ADDING A RADIO CONTROL HEAD/MAP BOOK CONSOLE (SEE 3.9.2 and 3.15.3-29) BETWEEN THE FRONT SEATS, THE DELETION OF THE DOOR ALSO PROVIDES FOR ISOLATION OF THE DRIVER FROM VIOLENT PATIENTS AND THE SEPARATION OF INDIVIDUALS THAT MAY BE ACCOMPANYING THE PATIENT WHO COULD INTERFERE WITH PATIENT CARE.

3.10.16 INSULATION.

The entire body, sides, ends, and roof of the patient's compartment shall be completely insulated to enhance the performance of the environmental systems, specified in 3.4.2 and 3.13, and prevent external noise from entering the vehicle interior. The insulation shall be a non-settling type, vermin-proof, mildew-proof, fire retardant, non-toxic, and non-hygroscopic. If fiberglass insulation is used, it shall not be exposed to water, e.g. door panels.

3.10.17 INTERIOR SURFACES.

The interior of the body shall be free of all sharp projections. All hangers or supports for equipment and devices shall be mounted as flush as possible with the surrounding surface. The finish of the entire patient compartment, including interiors of storage cabinets, shall be: impervious to soap and water, disinfectants, mildew, fire resistant, comply with FMVSS 302; and be easily cleaned/disinfected (carpeting, cloth, and fabrics are not acceptable). Interior body lining and cabinetry materials, excluding the cab compartment (see 3.9), shall be selected to minimize dead weight and shall be plastic laminated or painted aluminum

Downloaded from http://www.everyspec.com

panels or plastic laminated wood or of other lightweight, equivalent strength materials such as fiberglass, composites, and fiberglass reinforced plastics. Panels shall be installed in a manner that prevents sagging, deflection, warpage, or vibration. The ceiling/headliner shall be of similar lightweight materials. For interior colors, see 3.16.2.

3.11 STORAGE COMPARTMENTS.

Storage compartments shall be furnished for all items required by this specification and/or specified by the purchaser and include storage for, but not be limited to, backboards, portable cots/litters, stair chairs, and any other specified patient handling devices.

Any absorbent material such as carpeting, fabric, or inside/outside plastic type carpeting, etc. that resists cleaning and decontamination shall not be used in any storage or patient compartment.

3.11.1 INTERIOR STOWAGE ACCOMMODATIONS.

Unless otherwise specified by the purchaser (see 6.2-ii), the interior of the patient compartment shall provide a minimum volume of 1 cubic meter (35 cubic feet) of enclosed stowage cabinetry, compartment space, and shelf space which shall be conveniently located for medical supplies, devices, and installed systems as applicable for the service intended. Enclosed compartments and spaces shall be located at, in, or on the partition, sidewalls, overhead, squad bench, technician seat, and doors. Compartment(s) under the floor, with opening panel(s) inside the patient compartment, shall not be acceptable. At a minimum stowage shall be required for the items as shown below:

ITEM	MINIMUM VOLUME CUBIC METERS	CUBIC FEET
Medicine dispensary cabinet(s)	0.17	6
Medical supplies cabinet	0.25	9
Linen supplies	0.11	4
Trash receptacle compartment and sharps disposal container	0.06	2
Oxygen installation (main) (see 3.12)	0.17	6
Oxygen unit (portable)	0.06	2
Telemetry equipment	0.06	2
Radio equipment & antenna	0.03	1
Storage, miscellaneous	0.06	2
Vacuum aspirator unit	0.03	1
Air conditioning unit	As Required	
Heating system	As Required	

Downloaded from http://www.everyspec.com

3.11.1.1 LOCATION OF MEDICAL EQUIPMENT AND SUPPLIES.

Location of medical supplies and equipment shall be dictated by their relative importance and shall be readily accessible to the Emergency Medical Technician (EMT). Priority shall be given to items necessary to cope with life threatening conditions at the scene and in transit. The equipment and supplies necessary for airway maintenance, ventilation, oxygenation, and suction shall be at the head of the primary litter (action area). When items for cardiac monitoring/ defibrillation, mechanized CPR, administration of intravenous fluids/medications, and the monitoring of blood pressure are furnished, they shall also be readily available to the EMT at the action area. Supplies, devices, tools, etc., shall be stored in enclosed compartments and drawers designed to accommodate the respective items. All medical devices and equipment shall be stowed or properly fastened in/on the action area or in cabinets or to the rail system(s) brackets, when specified (3.15.4 M1), to prevent items from becoming projectiles in the patient compartment that can cause injury while the vehicle is in motion or involved in an accident.

3.11.1.2 INTERIOR COMPARTMENT WITH EXTERIOR ACCESS.

When specified by the purchaser, on Types I and III vehicles (see 3.15.3-32), an interior/ exterior compartment with 2 shelves, or other interior configuration as specified by the purchaser, shall be provided in the front, right corner of the body or other location as specified. This compartment shall also have an exterior door and, unless otherwise specified (see 3.15.3-32) or permitted by the purchaser, a roll-up, inside door with an enclosed, roller assembly. When viewed from the vehicle's interior, this compartment shall have the following minimum dimensions: W 76 cm (30"), D 46 cm (18"), and H 102 cm (40"). The door shall be equipped with the necessary gaskets, seals or other vibration and noise silencing devices, a positive mechanical latch and a grab handle to facilitate opening and closing. The shelves shall be adjustable and have an approximate 3/4" lip covered with automotive edge molding.

3.11.1.3 WASTE AND SHARPS DISPOSAL.

The following shall be furnished: A trash receptacle compartment, with closure over opening, for general waste shall be furnished with a plastic/rubber trash can and disposable plastic liners, with 12 spare liners. The trash compartment shall be accessible to the EMT seat and to the head of the squad bench. The consignee shall furnish bags/liners that meet OSHA requirements, for disposing regulated medical waste (as defined by OSHA).

A sharps receptacle compartment/storage or a commercially available container mounted in a convenient area shall be furnished for retention of a sharps container that meets OSHA requirements.

3.11.2 EXTERIOR STORAGE ACCOMMODATIONS.

On Types I & III and when specified (see 6.2-ii) on Type II vehicles, outside entered, weatherproof, storage compartments shall be provided in the ambulance body for extrication, spare tire, oxygen, and miscellaneous equipment. When specified, (see 6.2-ii), additional exterior storage compartments shall be furnished. Exterior compartment doors and hardware shall be flush or near flush style construction. All doors shall have spring or gas tube type, hold open devices that permit one hand closure. Hardware (hinges, locks, latches, etc.) shall be rust resistant. All exterior compartments shall have latches with locks and shall be keyed alike. All exterior compartments, except the long narrow backboard storage compartment,

Downloaded from http://www.everyspec.com

shall be automatically lighted when opened. When top and vertically hinged doors are furnished, they shall employ ratchet or spring loaded or gas tube hold open devices.

3.11.2.1 EXTRICATION EQUIPMENT AND STORAGE.

The extrication equipment compartments, maximum of two, shall provide at least 0.28 cu meters (10 cu feet) of storage accommodations. Small hand-tools shall be contained in a single pouch type carrying device. An example of items and other miscellaneous extrication equipment which shall be stored in the extrication storage compartment(s) follows. The contractor shall furnish specific items as specified under 3.15.3-18:

a. One wrench; 30 cm (12"), adjustable, open end.
b. One screwdriver; 30 cm (12"), regular blade (slot).
c. One screwdriver; 30 cm (12"), Phillips type.
d. One hacksaw; with 12, wire blades (carbide).
e. One pliers; 25 cm (10"), vise grip and one pair, channel lock pliers.
f. One hammer; 1.4 kg (3 lb.), 38 cm (15") handle (engineer style).
g. One fire ax; flat head.
h. One crowbar; 130 cm (51"), pinch point.
i. One wrecking bar; 61 cm (24"), combination tool.
j. One bolt cutter; 91 cm (36"), jaw opening of 32 mm (1 1/4") or greater.
k. One power jack; portable, hydraulic and spreader tool kit, hand powered, minimum 4,064 kg (4 ton) capacity.
l. One shovel; pointed blade (folding type).
m. One tin snip; double action, minimum 20 cm (8").
n. Two ropes; synthetic, kernmantle, 15 m (50') x 19 mm (3/4") diameter each.
o. Three pairs gloves; leather (gauntlets).
p. Three pairs goggles; clear eye protective.
q. One cold chisel; and one center punch; 13 mm (1/2") x 305 mm (12").
r. One cold chisel; 25 mm (1") x 305 mm (12").
s. One seatbelt cutter.
t. Two utility knives; curved blade.
u. One rope; weighted, polypropylene, 30 m (100 ft.) , 13 cm (1/2") diameter.
v. One pair lineman’s rubber gloves with leather shells.
w. Two lights; portable, battery operated.
x. One fire blanket and case (min. 152 cm (5 ft.) x 183 cm (6 ft.)).
y. Two baling hooks.
z. Three hard-hats with face and eye protection device.
aa. One spring loaded, window punch.
bb. Twelve (12) hardwood, shoring blocks, 51 mm (2") x 102 mm (4") x 254 mm (10") with rope handles.
cc. Four blocks; hardwood, cribbing, 102 mm (4") x 102 mm (4") x 304 mm (12") with rope handles.
dd. Four blocks; hardwood, cribbing, wedge shaped, with rope handles.
ee. One come-along, 1814 kg (2 ton), chain type with hooks.

Downloaded from http://www.everyspec.com

ff. Two alloy steel, rescue, pull chains, 3 m (10 ft.) minimum, with grab hooks and rings.

gg. One gun kit; air cutting, 1722 kPa (250 psi), with cylinder and chisels.

hh. One truck jack, hydraulic, 2722 kg (3 ton).

ii. Two extrication straps, synthetic fabric, 2.7 m (9 feet), with quick release buckles.

jj. One extrication, loop sling, 2.5 cm (1") wide nylon, or equal, 183 cm (6 ft.) circumference with closure ring.

3.11.3 STORAGE COMPARTMENTS AND CABINETS DESIGN.

Storage cabinets, drawers, and kits shall be easily opened but shall not come open in transit. For rapid identification of contents, medical supply cabinets above the litter patients, shall have shatterproof, transparent or lightly tinted, sliding doors provided with two recessed metal finger cups, near flush grip, or low profile handles. Storage compartments shall be divided into sections, shelves shall be adjustable, drawers shall be marine style slide or tilt, and all shall be removable. Sliding doors for cabinets designed to carry light weight items such as dressings, bandages, etc. shall automatically latch or be fitted with friction holding devices when in a closed position. Other compartments designed to carry heavier items such as first aid and drug kits, portable and spare oxygen bottles, suction units, etc. shall have positively locked latches that are bolted to the door and the door frame structure and are designed to remain closed in an accident, including rollovers. Use of sheet metal or wood screws is not acceptable. Side cabinet shelves shall be no more than 51 cm (20 in.) in depth, when located above the vehicle belt level. Storage compartments, cabinets, and support equipment area interior surfaces shall be finished in accordance with 3.10.17. To preclude injury, in the event of an accident, all cabinets shall be firmly anchored (bolted or welded) to tapping plates of the body structure (3.10.6). Tops of the cabinets and shelves shall be surrounded by a lip of not less than 13 mm (1/2") in height covered in a soft, pliable molding. All shelves shall be continuously adjustable. Storage for the main oxygen cylinder (see 3.12.1) shall be accessible for replacement from an outside position. The oxygen compartment shall be provided with at least a 58 sq. cm (9 sq. in.) louvered device to dissipate/vent leaking oxygen to the outside of the ambulance. Oxygen cylinder compartment shall not be utilized for storage of any other equipment. Any wiring and electrical devices within this compartment shall comply with 3.7.2. Oxygen cylinder(s) shall be mounted with a restraining device(s), as required for the crashworthiness tests of AMD Standard 003, Oxygen Tank Retention System.

3.11.4 SQUAD BENCH, SEATS, AND BACKRESTS.

Unless otherwise specified by the purchaser (see 6.2) the squad bench shall have post cups and/or wheel cups to prevent lateral and longitudinal movement and support the Style 3 folding stretcher, combination stretcher chair specified (see 3.10.1 and 3.11.5), or other purchaser specified stretcher (3.15.4 M16, or Style 5). Unless otherwise specified, (see 6.2) the squad bench top shall be between 48 cm (19") and 56 cm (22") wide, a minimum of 183 cm (72") long, and a height of between 43 cm (17") and 51 cm (20") measured from the floor to the top of the padded seat. Top opening squad bench platform(s) shall be fitted with an automatic hold open device, and when closed, a latching device for safety. All seats in the patient compartment shall be padded, at least 46 cm (18") wide, and have the largest practical padded backrest. Padding furnished shall be rubber or polyester urethane foam of a medium to firm density, in covered, finish thickness of at least 6.3 cm (2.5 in.) for

Downloaded from http://www.everyspec.com

seats, and approximately 5.1 cm (2 in.) for head and backrests. All padding and upholstery shall be fire retardant and meet FMVSS 302. Additionally, the upholstery shall be non-absorbent, washable and impervious to disinfectants. Non-OEM seats shall have 40 oz. reinforced vinyl upholstery. To facilitate cleaning and disinfecting, all seats furnished and installed by the ambulance manufacturer shall be cleanable to OSHA standards, and all exposed surfaces shall be free of vent devices that would permit the entrapment of biological contaminates.

Squad bench shall be furnished with at least three sets of lap (Type I) safety belts for seated occupants and for retention of a cot/stretcher when positioned on the squad bench. The belts shall be positioned at the patient's chest, hips, and legs. Seatbelts shall comply to FMVSS 209. The anchorages for the side facing seatbelt assembly shall withstand a minimum of 1134 kg (2,500 lbs.) force when tested in accordance with FMVSS 210-S5.1. Other side facing seats shall have a Type I lap safety belt.

Sealed storage shall be provided for the specified oxygen bottle, when located under the rear of the squad bench, with separate compartment under the front of the bench, and the maximum possible cubic foot volume. The squad bench cover latching device(s) shall be a quick release, slam type latch similar to a Cleveland Model 3300 TL with 3400-15 striker pin. For configuration A (ALS) or, when specified (see 3.15.3-28), a side facing seat located on the street side of the vehicle at the patients thoracic region shall be furnished. This seat shall also be furnished with a seat belt meeting the above requirements and shall have rear and lateral padding at the head areas.

3.11.5 STRETCHERS, COTS AND LITTERS.

When specified (see 3.10.1, 3.15.4 - M10, & 6.2-jj), the ambulance supplier shall provide the following: a Style 1 or Style 2 (with roll-in feature) cot for the primary patient, and a Style 3 folding stretcher or a combination stretcher chair, each with legs and two wheels designed to permit a patient to be carried (or wheeled) on stairways and through other narrow areas (see 3.11.5.1). Stretchers, cots, and litters shall conform to the dimensions of Table II (see 3.10.1). Length and width measurements shall be taken at the metal framing, excluding joint fittings. Wheeled cots shall include foot and head pulls, when available from the cot manufacturer, and a polyester foam mattress at least 8 cm (3 in.) thick or an equivalent mattress covered with vinyl coated, nylon fabric or other non-porous fabric conforming to FMVSS 302, or equivalent, and restraint straps per 3.11.8.1.

3.11.5.1 COMBINATION STRETCHER CHAIR.

When specified in 3.15.4 M16, a Combination Stretcher Chair, shall be furnished, in lieu of the stored stairway stretcher specified in 3.11.5. The stretcher shall conform to the dimensions of Style 3 in Table II (see 3.10.3). Stretcher shall have posts, wheels, folding handles at foot-end, straps, and convert to a stair chair or stretcher.

3.11.6 SEAT SAFETY BELTS AND ANCHORAGES.

All seats shall comply with FMVSS 207. Safety belts and anchorages shall comply with FMVSS 208, 209, and 210, except as otherwise specified (3.11.4). Seatbelts shall have retractor devices for all seat positions in the vehicle, including the squad bench.

3.11.7 LITTER FASTENERS AND ANCHORAGES.

A crash stable side or center mounting cot fastener assembly with quick release latch shall be furnished. It shall secure the Style 1 or Style 2 wheeled cot or infant transporter to the ambulance

Downloaded from http://www.everyspec.com

body. Style 4 and Style 5 litters need not be provided with fastening devices unless otherwise specified (see 6.2-jj). The installed cot fastener device(s) for wheeled cots shall be tested to comply with a 2200 lb. pull test in accordance with AMD Standard 004, Litter Retention System. Additional cot related hardware is permitted, provided the patient compartment exit/entry is not encumbered with the cot in place. The furnished devices shall have a bright colored finish, if the device presents a tripping hazard in the entry/exit area when the cot is removed.

WARNING: USERS SHALL NOT USE OR INSTALL ANY COT OR INFANT TRANSPORTER THAT IS NOT SPECIFICALLY DESIGNED FOR USE/ INTERFACE WITH THE FASTENER ASSEMBLY/AMBULANCE, AND IS MANUFACTURED, INSTALLED AND TESTED/ CERTIFIED AS REQUIRED HEREIN AND AMD 004.

3.11.8 PATIENT RESTRAINTS.

3.11.8.1 COT STRAPS.

At least three strap type restraining devices (chest, hip, and knee) shall be provided per stretcher, cot, and litter to prevent longitudinal or transverse dislodgment of the patient during transit. Additionally, the head of the cot shall be furnished with upper torso (over shoulder) restraints that mitigate forward motion of the patient during severe braking or in a frontal impact accident. Restraining straps shall incorporate metal-to-metal quick release buckles, be not less than 51 mm (2 in.) wide, and fabricated from nylon or other materials easily cleaned and disinfected.

3.11.8.2 INFANT/CHILD CARRIER.

When specified (see 3.15.4 M26) an infant/child spinal immobilization/carrier device shall be furnished that safely secures those patients to the cot.

3.11.9 I.V. HOLDERS FOR INTRAVENOUS FLUID CONTAINERS.

Two near flush style, I.V. ceiling holders specifically designed for holding I.V.'s, with a Velcro type strap to hold and control I.V. bags/bottles, shall be provided. The ceiling holders shall not protrude more than 2.5 cm (1 in.), be located on or adjacent to the side wall, one at the head of the primary patient and one at the head of the secondary patient's cot (squad bench). When an ALS configuration (see 3.1.5.1) is specified, one additional I.V. hanger shall be furnished for each patient, at the lower extremities. When specified (3.15.4 M2), a fold down, rigid, telescoping I.V. pole and holder shall be provided on the left side of the cot.

WARNING: SWING DOWN I-V HANGERS THAT CAN CAUSE INJURY SHALL NOT BE SPECIFIED OR FURNISHED.

Downloaded from http://www.everyspec.com

3.12 OXYGEN AND SUCTION SYSTEMS AND EQUIPMENT.

The ambulance manufacturer, as required, shall furnish devices/equipment under 3.12 through 3.12.4 complying to this specification or to other Medical Associations approved standard(s) (e.g. ASTM). The specified device shall be tested and certified by an independent, medical testing laboratory for EMS use.

3.12.1 OXYGEN, MAIN SUPPLY AND INSTALLATION.

The ambulance shall have a hospital type piped medical oxygen system capable of storing and supplying a minimum of 3,000 liters (see cylinder data 6.7) of medical oxygen. Unless otherwise specified (see 6.2-kk for additional sizes or aluminum or composite bottles), the main oxygen supply shall be from a single "M" size cylinder which consignee will provide and install at the time the vehicle is placed in service. Cylinder(s), when furnished, shall conform to Federal Specification RR-C-901, DOT Specification 3AA2015 and MS-39226-8. Unless otherwise specified by the purchaser (see 6.2-kk), the oxygen cylinder shall be located in an area that provides for proper balance and weight distribution (see Paragraph 3.5.4).

The cylinder controls shall be accessible from the inside and outside of the vehicle. The bottle pressure gauge or equivalent device shall be visible from the EMT's seat and/or the squad bench. The oxygen bottle shall be accessible for changing from the exterior of the body and, on Type II vehicles, through a sealed door. Access to the bottle, when located under the squad bench, shall also be through the rear half of a two section, squad bench cover.

If necessary, or when specified (see 3.15.4 M8), a remote bottle pressure indicator, such as a multi-light indicator showing "Full", "3/4", "1/2" and "1/4", and "Empty" or a digital indicator or other analog type that displays bottle capacity, in at least 25 percent increments, shall be furnished and mounted on the EMT panel. Systems with audible alarms shall have a resetable, audible alarm that sounds when the capacity is down to 20-25 percent. A shutoff valve or solenoid, when specified, shall be furnished in the 344 kPa (50 psi) line, and shall be located on the EMT panel. If a solenoid is utilized, a readily accessible, emergency bypass valve shall be furnished and identified. The purchaser shall specify the type of quick disconnect, action wall device (see 6.2-ll) to be used to interface the flow meter and oxygen powered, manually triggered (resuscitator) valve (see 3.15.4 M7 and M20). E.g. DISS, NCG, or an Ohmeda type connector.

A cylinder changing wrench shall be furnished, chained, and clipped within the oxygen cylinder compartment. The contractor shall install all other components and accessories required for the piped oxygen system which shall include, but not be limited to: a pressure regulator preset to 344 +/- 34 kPa (50 +/- 5 psi) line pressure, non-ferrous piping and/or low pressure, electrically conductive, hose approved for medical oxygen at the flow rate specified in 3.12.1.1. INDUSTRIAL OR WELDING TYPE OXYGEN HOSE SHALL NOT BE USED. Oxygen piping shall be concealed and not exposed to the elements, securely supported to prevent damage, and be readily accessible for inspection and replacement. Oxygen shall be piped to a self-sealing duplex oxygen outlet station for the primary patient and, when specified (see 3.15.4 M9), for the secondary patient. Oxygen outlet shall be located within 89 cm (35") from the center of the patient's head when in the supine position with the cot located in the position closest to the action wall. One of the outlets shall be for a flow meter/humidifier, and the second oxygen outlet shall be used for

Downloaded from http://www.everyspec.com

quick disconnect plug-in devices not requiring humidification. Outlets shall be adequately marked and identified (see 3.7.11) and not interfere with the suction outlet. The entire system shall be leak tested in accordance with AMD Standard 015 (see 4.4.6).

3.12.1.1 OXYGEN PRESSURE REGULATOR AND FLOWMETER.

The medical, oxygen pressure reducing and regulating valve with inlet filter at the cylinder shall have line relief valve set at 1378 kPa (200 psi) maximum, and a gauge or digital monitor with a minimum range of 0 to 17225 kPa (0 to 2,500 psi) [27,560 kPa (4,000 psi) tested] with the gauge or display scale graduated in not more than 100 PSI increments. The regulator shall be easy to connect and preset, with a locking adjustment, at 344 +/- 34 KPa (50 +/- 5 psi) line pressure, permitting a minimum 100 LPM flow rate at a bottle pressure of 689 kPa (150 psi) (empty). In order to show actual oxygen flow rate, the flow meter, when specified (3.15.4 M7), shall be a pressure compensated type (with floating ball indicator-Thorpe type). It shall have calibrations and be continuously adjustable over a minimum range of 0 to 15 liters per minute (LPM). The flow meter shall withstand a minimum 1378 KPa (200 psi) inlet pressure without failure or damage. Flowmeter(s) shall be installed vertically and shall be readable from the EMT seat and squad bench. Both the oxygen regulator and flowmeter, when specified (see 3.15.4 M7), shall have standardized connections, be electrically conductive from inlet to outlets (rated hose), and incorporate an inlet filter. These devices shall maintain accurate readings and calibrations under ambulance operation and shall be unaffected by temperature conditions of 3.4.2. All settings, calibrations, safety valves, limiters for pressure, and flowmeters shall maintain accuracy to within +/- 10 percent. Servicing, parts, and instructional manuals shall be provided and included in 3.20. Each device shall be color coded green and also be approved for use by recognized national medical associations and societies. The oxygen regulator and flowmeter shall each be permanently identified with the manufacturer's name, model number, calibrated conditions, and specific markings including warning/caution information.

3.12.2 PORTABLE OXYGEN UNIT.

When specified (3.15.4 M17), a portable oxygen unit of at least 300 liters ("D" size cylinder, see 6.7) shall be provided having a yoke regulator with pressure gauge, dual 344 kPa (50 psi) ports, regulator/dial type flowmeter, delivery tube, and oxygen mask(s). The unit shall be capable of delivering an oxygen flow of at least 15 liters per minute through the flowmeter and 100 liters per minute to the manually triggered, oxygen (resuscitator) valve in 3.12.2.2. A full spare cylinder of oxygen for this unit shall be furnished and stored. Portable cylinder(s) and kit shall be secured and, when located in patient compartment, shall include a crash stable, quick release bracket that meets the test requirements in the AMD Oxygen Tank Retention Standard 003. A quick release mounting bracket(s) shall also be provided for the portable oxygen unit and spare bottle(s) when located in a secure compartment (see 3.11.1.2) or other purchaser specified (see 6.2-mm) location not requiring a crash stable mounting system..

3.12.2.1 SQUEEZE BAG-VALVE-MASK SYSTEM.

When specified (3.15.4 M6), a portable squeeze bag-valve-mask kit shall be furnished. The bag-valve-mask system shall comply with the following:

a. Two self-refilling bags without sponge rubber inside. One bag of 1,000 cc +/- 10% volume for adults and one bag of about 700 cc, but not more than 750 cc volume, for children and infants.

Downloaded from http://www.everyspec.com

b. Three see through inflatable face-masks, one each in adult, child, and infant sizes. Two masks covering the full range of adult through pediatric sizes may be furnished in lieu of three masks.

c. Standard 15 mm/22 mm fittings.

d. A true non-breathing valve.

e. An oxygen reservoir system for delivery of 80-100 percent oxygen through an ancillary oxygen inlet. The system shall be capable of accepting at least 15 liters/min. of oxygen without valve jam.

3.12.2.2 OXYGEN POWERED, MANUALLY TRIGGERED (RESUSCITATOR) VALVE.

When specified (3.15.4 M20), an oxygen powered manually triggered (resuscitator) valve shall be provided. This device shall have a see through inflatable face mask, interface with the action wall outlet, via the specified quick disconnect device, and/or the dual port regulator/ flowmeter of the portable oxygen system, and meet the following requirements:

a. Provide oxygen for breathing and non-breathing patients.

b. Provide manually triggered flow rates in accordance with the American Heart Association (AHA), ASTM, or other recognized medical/standards organization(s).

c. Provide not less than 85 percent oxygen.

d. Be equipped with a safety valve having a release pressure setting of 60 cm of water for adults.

3.12.2.3 AUTOMATIC RESUSCITATOR.

When specified (3.15.4 M29), an automatic resuscitator/volume ventilator shall be furnished. The device's features and performance shall conform to AHA or other medical/standards organization requirements. The device shall be furnished with a connection hose and ambulance and/or portable oxygen system compatible quick disconnect fittings.

3.12.3 SUCTION ASPIRATOR, PRIMARY PATIENT.

Unless otherwise specified (see 6.2 nn), an electrically powered suction aspirator system shall be furnished with an illuminated switch and a panel mounted, labeled, quick disconnect inlet device on the EMT panel. The suction pump shall be located in an area that is accessible but sound and vibration insulated from the patient compartment. The pump shall be vented to the vehicle's exterior. When specified by the purchasers (see 6.2) for gasoline powered vehicles, an engine powered suction system may be furnished and shall include a hospital type self sealing plug-in outlet. The system shall include a corrosion resistant reservoir having a volume of not less than 10.5L (640 cu. in.) which is connected to the engine manifold through a check valve. All components, electrical, pressure and/or vacuum, and other lines and accessories, shall be securely mounted yet readily accessible. The electric type aspirator system shall be connected per Figure 5A or 5B. The aspirator system shall provide a free air flow of at least 30 LPM and achieve a minimum of 300 mm (11.81 in.) Hg vacuum within four seconds after the suction tube is closed. The rate of flow and pressure of the engine vacuum aspirator system shall be attainable continuously during the entire normal range of vehicle operation (i.e., accelerating, decelerating, at rest, climbing hills, etc.). A vacuum control and a shut-off valve, or combination thereof, shall be provided to adjust vacuum levels and to discontinue aspiration instantly. A vacuum indicator gauge of 76 mm +/-13 mm (3" +/-0.5") in diameter, with numerical markers at

Downloaded from http://www.everyspec.com

least every 100 mm Hg and a total range of 0 to 760 mm Hg, shall be provided. The collection bottle or bag shall be nonbreakable and transparent with a minimum 1,000 ml capacity. The following accessories shall be furnished: one suction rinsing water bottle; one semi-rigid pharyngeal suction tip, with thumb suction control port, (nonmetallic) of sufficient diameter to allow aspiration of semi-solid gastric contents; a 3 meter (10 foot) length of transparent or translucent, non-kinking suction tubing which shall not collapse under high suction; and a minimum of ten spare collection bags when the bag type system is furnished.. To assure high air flows and free passage of aspirate, minimum inside diameter for the suction tubing and tubing connectors shall be at least 6.4 mm (1/4 in.). The other suctioning catheters shall be provided by the user. An operator's manual containing clearly illustrated instructions for operation, cleaning, assembly/disassembly, decontamination/sterilization, troubleshooting, parts list, etc., shall be provided. The apparatus shall be clearly marked with manufacturer's name, address, and any applicable standards ratings (see 3.20).

3.12.4 PORTABLE SUCTION ASPIRATOR.

When specified (3.15.4 M18), a portable suction aspirator having the following characteristics shall be provided. The unit shall be capable of operation from the vehicle's 12 volt DC electrical system (see Figure 7). It shall also operate from an integral battery supply which is rechargeable and which will allow the unit to meet the air flow and suction requirements of this paragraph for at least 20 minutes of continuous operation. Gas powered portable suction aspirators are acceptable if they meet the performance requirements specified herein. The portable suction aspirator shall provide an air flow of at least 30 liters per minute at the end of the suction tube and a vacuum level of at least 300 mm Hg to be reached within 4 seconds after the tube is clamped. The portable aspirator shall be provided with the following accessories: one suction rinsing water bottle, one nonmetallic pharyngeal suction tip with thumb suction control port of sufficient diameter to allow aspiration of semi-solid gastric contents. The suction tubing shall be translucent and shall not kink or collapse under high suction. The inside diameter of the tubing shall be at least .64 mm (1/4"). The other suctioning catheters shall be provided by the user. The internal battery supply shall be rechargeable from the vehicle's 12 volt DC electrical system, (see Figure 7) and from 115 volts AC. The 115 volt AC charging system need not be integral to the portable suction unit. The unit shall be provided with applicable power cords and plugs (see 3.7.7.3). If the military style plug is furnished, the polarity shall be as follows: Pin A (+12 volts), Pin B (ground), Pin C (not used). An operator's manual containing clearly illustrated instructions for operation, cleaning, assembly / disassembly, decontamination/sterilization and troubleshooting, parts list, etc., shall be provided. The apparatus shall be clearly marked with manufacturer's name, address, and any applicable standards ratings (see 3.20).

3.13 ENVIRONMENTAL: CLIMATIC AND NOISE PARAMETERS.

3.13.1 ENVIRONMENTAL SYSTEMS.

All ambulances shall be equipped with a complete climate environmental system(s) to supply and maintain clean air conditions and specified level of inside temperature in both driver and patient compartments. The various systems for heating, ventilating, and air conditioning may be separate or combination systems which shall permit independent control of the environment within each compartment. All ambulances shall be equipped with heating, ventilating, and air

Downloaded from http://www.everyspec.com

conditioning systems that can be made to collectively operate using re-circulated air and outside ambient air and shall be capable of maintaining interior temperature of 20° C to 26° C (68° F to 78° F) when operated between -18° C to 35° C (0° F to 95° F) outside ambient temperature. Ambulance shall be tested in accordance with AMD Standard 012.The air systems shall be high volume capacity with low velocity delivery for minimum draft circulation while providing a positive pressure within each closed compartment (positive pressure may be attained through the fresh air ventilation system either apart from or as an integral part of the heating/air conditioning system). Environmental system components shall be readily accessible for servicing at the installed location(s). Connecting hoses for heating and the air conditioning system shall be supported by rubber insulated metal clamping devices at least every 30 cm (12 in.). The driver and patient compartment environments shall not in any way be dependent upon each other.

3.13.2 DRIVER'S COMPARTMENT ENVIRONMENTAL EQUIPMENT.

The driver's compartment shall be furnished with the chassis manufacturer's hot water, fresh air, high capacity, heater, defroster, and air conditioning system. The patient compartment heater shall be installed in a manner that does not adversely affect the chassis manufacturer's FMVSS 103 performance certification for windshield defrosting.

3.13.3 PATIENT COMPARTMENT ENVIRONMENTAL EQUIPMENT.

The patient compartment shall be heated, ventilated, and air conditioned in accordance with the criteria specified herein. During the performance testing (see 4.4.2) of the heating and air conditioning systems, the use of fans or blowers, within the test chamber, is only permitted to provide air circulation to help maintain the required ambient test temperature. The use of these fans or blowers to direct air through the vehicle's radiator and/or condenser(s) is not permitted.

3.13.4 HEATING CRITERIA.

The heating system(s) shall have sufficient capacity to simultaneously raise the temperature at the midpoints, in each compartment, to a minimum dry bulb temperature of 20° C (68° F), at all twelve test points (9 patient compartment and 3 cab) within 30 minutes. Test conditions: the ambulance (with doors open) shall be cold soaked for three hours in an ambient temperature of (0° F), then the engine started and allowed to run at the high-idle setting (see 3.7.6) while the transmission is in park or neutral. Three verification readings shall be made (start, middle, and final) by nine equally spaced test thermocouples in the patient compartment, and three in the cab compartment. Heating equipment may be in the recirculating mode and all compartment openings, including partition doors/windows and exhaust vents, shall be closed. Heater(s) furnished shall comply to applicable Motor Carrier Safety Regulation 393.77. Heater(s) shall, to the maximum extent possible, be connected to the chassis manufacturers furnished interconnection points. When interconnection points are not furnished, chassis manufacturers unused engine water pump supply ports shall be utilized. All added heater hose shall meet or exceed chassis manufacturers requirements and when specified (see 6.2-fff), silicone hoses shall be furnished.

3.13.5 AIR CONDITIONING CRITERIA.

The air conditioning system(s) shall have sufficient capacity to simultaneously lower the temperature at the midpoints in each compartment to a maximum dry bulb temperature of 26° C (78° F), at all twelve (9 patient compartment plus 3 cab) test points within 30 minutes. Test conditions: the

Downloaded from http://www.everyspec.com

ambulance (with doors open) shall be heat soaked for three hours in an ambient temperature of 35° C (95° F), then the engine started and allowed to run at high-idle setting (see 3.7.6), while the transmission is in park or neutral, with test verification and thermocouples placement as specified in 3.13.4. Air conditioning equipment may be in the recirculating mode and all compartment openings, including partition doors/windows, shall be closed. When available, chassis manufacturers interconnection points shall be utilized.

3.13.5.1 AUXILIARY AIR CONDITIONING CONDENSER.

When specified by the purchaser (see 6.2-oo) or required for high temperature geographic areas or furnished as standard equipment, an auxiliary condenser shall be provided which will allow for maximum system performance, based on the air conditioning and ambulance manufacturer's recommendations. If the condenser is located above the cab, it shall not block the emergency lights. All added refrigeration lines and fittings shall be mechanical fittings compatible with OEM components furnished by the chassis manufacturer. An auxiliary condenser may be furnished or specified to function in lieu of the chassis manufacturer's condenser provided it meets or exceeds all other system performance requirements.

3.13.6 VENTILATION CRITERIA.

Ventilation system(s) of the driver and patient compartments shall provide a complete change of ambient air within each compartment at least every two minutes with the vehicle stationary. Ventilation shall be separately controlled within each compartment. Fresh air intakes shall be located towards the front of the vehicle and exhaust vents shall be located on the upper rear of the vehicle. Exhaust vents may be located on the rear lower half of the module/body, provided the vent/device incorporates a reverse flow damper to prevent backdraft and intrusion of vehicle engine exhaust, dust, dirt, or road spray. The patient compartment shall be ventilated by the air delivery system of the environmental equipment (heater-air conditioner) or by separate system(s), such as power intake, exhaust ventilator(s).

3.13.7 ENVIRONMENTAL CONTROLS.

Adjustable, manual or thermostatically operative controls shall permit heating and/or air conditioning and ventilation in either compartment without affecting the other compartment. Switches and controls shall be located in EMT's panel and/or remote panel and identified for function and operating position (see 3.7.9 through 3.7.11). Switches, wiring and control components shall be rated at a minimum of 125 percent of the maximum electrical load of the blower(s) and other components (see 3.7.2). Blower or fan system shall have at least three speeds (excluding "OFF"). Separate non-corroding brass, bronze, stainless steel, plastic or other inherently corrosion proof shutoff valves, for the patient compartment hot water heating system, shall be provided to allow servicing and shutoff. The use of vacuum operated shutoff valves is acceptable provided the above criteria is met and the valve provides inherent sealing when vacuum is removed. This sealing shall prevent engine cooling system pressure and water pump pressure from causing any leakage when vacuum is removed. Air systems shall have adjustable louvers to direct the flow of air.

3.13.8 PATIENT COMPARTMENT SOUND LEVEL CRITERIA.

Unless otherwise specified (see 6.2-pp) by Federal or State regulations, the patient compartment decibel level shall not exceed 80 dB and shall be tested in accordance with AMD STANDARD 006.

Downloaded from http://www.everyspec.com

3.14 COMMUNICATIONS.

3.14.1 COMMUNICATION EQUIPMENT.

The ambulance and console(s) shall be configured for two-way radio(s) (mobile and portable), intercom, public address, electronic siren, and telemetry system(s). These systems, when specified (see 6.2-qq), herein or purchaser furnished/specified shall be installed and ready to use. Switches and controls shall be panel mounted and conform to 3.7.9 thru 3.7.11. Communications equipment shall meet the applicable FCC rules and required state and local area EMS radio communications.

3.14.2 RADIO (MOBILE) PROVISIONS.

All ambulances shall be provided with sufficient ventilated space for a two-way radio (including convenience features), antenna openings, ground plane, terminal wiring for 12V power and ground, and mounting panels (see 3.14.3) required for the installation and servicing of mobile radios. Unless otherwise specified (see 6.2-qq), the consignee will locally install mobile radio unit(s) or shall provide any additional data, equipment and a coordinator to insure compatibility of specified systems.

3.14.3 ANTENNA, CABLE, AND MOUNTING.

The contractor shall provide each ambulance with a ground plane, antenna opening, and coaxial lead-in wire from the ventilated radio storage area/compartment to a temporarily sealed antenna port. The antenna and/or mounting shall be on the centerline of the patient compartment roof. An antenna port shall be provided in the patient's compartment directly under the mounting area. The port shall provide at least a 10 cm x 10 cm (4" x 4") opening, and be marked as specified in 3.7.11. All nonmetallic roofs shall be equipped with at least a 102 cm x 102 cm (40" x 40") metal ground plane molded into the roof (see 3.10.6). A conduit and fish lead shall be provided when necessary to fish the cable from the antenna to the radio. Unless otherwise specified (see 6.2-qq), the antenna cable (lead-in) shall be a labeled, RG/58U or equal. Approximately 46 cm (18") of extra cable shall be provided at the antenna base (port) and at least 91 cm (3 feet) at/in the radio compartment provided with a PL-259 connector soldered to the end of the cable. Purchaser shall specify any changes or additional requirements.

3.14.4 TWO-WAY (MOBILE) RADIO EQUIPMENT.

When specified (see 6.2-qq), a solid state, mobile, two-way radio, meeting all purchaser requirements, shall be furnished. The transmitter power output shall be as specified.

3.14.5 INTERCOM SYSTEM.

When specified (3.15.3-4), solid state intercom equipment shall be provided between the driver and patient compartments. The driver shall have the capability to place the patient compartment in standby "talk" mode and to control any necessary talk/listen switching. The intercom system shall be independent of the two-way radio equipment. Cab compartment intercom shall be mounted in accordance with 3.7.9 and patient compartment intercom in accordance with 3.7.10, and comply to 3.7.11.

Downloaded from http://www.everyspec.com

3.14.6 SIREN - PUBLIC ADDRESS SYSTEM.

A combination electronic siren with integral public address system and other upgrading features, including radio interface capability, shall be provided. Dual speakers shall be installed, outside the vehicle, in the bumper/hood area. Speakers shall not protrude beyond the face of the bumper or bumper guards. The microphone shall be a noise canceling type. The siren's control shall permit the following sounds, Manual, Wail, and Yelp. Other applicable sounds such as "Rapid Yelp", "Air Horn" or composite type sounds, etc. may be specified (see 6.2-rr) or furnished. The system shall provide plug-in connections and connecting cables; with control capability from the passenger seat and driver's horn ring by means of a siren/horn switch or, when specified (see 6.2-rr), by a foot switch; and all other necessary hardware for the siren/public address operation. The public address amplifier shall be independent of the two-way radio, except that a common microphone and control housing group may be employed. The illuminated (in siren mode) "Horn/Siren" switch shall be provided on the driver's console, or the siren may be switched automatically with the use of the emergency light switch.

The siren, with the exception of cancellation effects due to dual speakers, when tested in a full anechoic chamber that conforms to ANSI Standard S1.13-1971, with test equipment and methods conforming to California Administrative Code, Title 13, Article 8, shall be capable of producing a continuous warning sound at a minimum level of 123 dB, A-weighted, at 3 meters (10 feet) on axis in the "Wail mode" with "Yelp" falling within 1 dba with 13.6 volts +/- 1% input, at a fundamental frequency in the range of 500 to 2,000 Hz maximum.

The output over the sweep range shall not drop to less than 116 dba. The speakers shall be located in the configuration that is representative of the vehicle on which they will be mounted.

In the "Wail" mode the siren shall have a sweep rate of 10-18 cycles per minute and in the "Yelp" mode, a sweep rate of 150 to 250 cycles per minute. All sweep modes shall cover a range of at least one octave.

In voice (P.A.) operation, the unclipped sine wave output shall be at least 55 watts RMS into a resistive load matching the nominal speaker system impedance at 1000Hz. The frequency response of the amplifier shall be from 500 to 3,000 Hz +/- 3 dB, when measured from 1,000 Hz reference. Total harmonic distortion shall not exceed 10 percent, at 20 watts RMS, over the specified frequency range when measured with the load shown above.

In addition, the electronic siren furnished with the exception of cancellation effects attributable to dual speakers shall comply to all the other requirements included in the State of California Vehicle Code Section 1020 thru 1029, Title 13, Article 8, the latest issue for Class A sirens. The electronic siren shall be tested, approved, and listed with the Automotive Manufacturers Equipment Compliance Agency (AMECA).

3.14.7 AIR HORNS.

When specified (3.15.3-36) by the purchaser, air horn(s) shall be furnished. Horns shall be activated as specified by the purchaser. Horn(s) shall be mounted forward of the cab compartment.

Downloaded from http://www.everyspec.com

3.15 ADDITIONAL SYSTEMS, EQUIPMENT, ACCESSORIES, AND SUPPLIES.

3.15.1 ADDITIONAL AND OPTIONAL EQUIPMENT.

When specified (see 6.2-ss), additional or optional system(s), equipment, accessories, and supplies shall be furnished, in addition to the standard ambulance component systems and devices specified herein. These items shall be selected by the purchasers. Optional items may be further described in authoritative procurement documents. In no event shall the specified or furnished optional item(s) reduce the quality and intent of the ambulance but shall enhance its design and purpose. The materials, devices, items, and fabrication, if not specifically described, shall be not less in quality, strength, performance, and service than those normally provided by the most reputable manufacturers.

3.15.2 STANDARD MANDATORY MISCELLANEOUS EQUIPMENT.

Unless otherwise precluded in the contract, each ambulance shall be equipped with, but not limited to the following:

a. Fire extinguishers: Two, ABC dry chemical, carbon dioxide) minimum 2.3 kg (5 lb.) unit, in a quick-release bracket, one mounted in the driver/cab compartment or in the body reachable from outside the vehicle and one in the patient compartment. When located in either the driver or patient compartments, the mounting bracket shall be a stable design.

b. "No Smoking Oxygen Equipped" and "Fasten Seat Belts" signs: Conspicuously placed in the cab and patient compartment.

c. Overhead grabrail, minimum 152 cm (60 in.) long, maximum 10.2 cm (4 in.) depth, on the ceiling over the primary patient. Grabrail shall be stainless steel, aluminum, or other corrosion resistant material, and have padded or curved up ends, and rounded corners. Mounting brackets shall be chromed, stainless steel, polished cast aluminum or other corrosion resistant materials. The grabrail(s) shall be installed in a manner that precludes loosening and shall meet a 136 kg (300 lb.) pull test in all three axis. The grabrail shall be tested in accordance with AMD Std. 008.

d. Backup alert alarm, (audible warning device) activated when the vehicle is shifted into reverse. Device must meet OSHA and SAE J994 requirements, and shall be rated (SAE) for Type C or B (97 or 107 dba at 122 cm (4 feet)) or purchaser may specify (see 6.2-ss) alarms that automatically adjust to ambient noise levels.

Downloaded from http://www.everyspec.com

3.15.3 OPTIONAL EQUIPMENT.

When specified (see 6.2-ss), the ambulance shall be equipped with, but not limited to the following. Additional weight, resulting from specified options, shall be deducted from the specified payload allowance (see 3.5.2).

1. **Reserved.**
2. **Tachograph;** 145 km/ hour (90 mph), with 24-hour chart, warning light, and siren recording.
3. **Intercom, Silent;** The system shall consist of amber, red, and green lights in the driver's compartment controlled by the EMT. It shall include an alerting buzzer in the driver's compartment.
4. **Intercom;** voice intercommunication system between driver and technician compartments as per paragraph 3.14.5.
   3.7.7, similar to Delco/ Delphi, Gould, or equal.
5. **Batteries;** 12VDC, heavy-duty "high cycle life," maintenance-free automotive type per**1.**
6. **115 VAC;** onboard electric power supply, Inverter (specify brand or equal) per 3.7.8.3.
7. **12 VDC battery charger or conditioner and portable equipment battery charging circuit;** specify conditioner or charger, and locations of additional portable equipment battery charging circuit lead termination point(s) per 3.7.7.1, 3.7.7.2, and 3.7.8.

(*)8. **High intensity cot light;** with flexible or adjustable shaft located near head of primary cot per 3.1.5.1.

9. **Checkout lights;** for patient compartment (see 3.8.5.2).
10. **Patient fan;** located near primary cot, minimum 250 CFM rating, 12VDC.
11. **Rear step storage compartment;** for Types I and III when available on specified chassis.
12. **Window;** tinted, right side panel of patient compartment, minimum 2774 sq. cm (430 sq. in.) per 3.10.14.
13. **Reserved.**

(*) 14. **Drug kit compartment;** locking, security compartment located near primary patient with piano hinge and non-exposed fasteners, door with key lock, minimum size 56 cm (22")W x 36 cm (14")D x 46 cm (18")H per 3.1.5.1.

15. **Stone/mud guard;** to protect lower front end of body (for Type I and III) (see 3.9.7.4).
16. **Power plant heaters;** minimum -34° C (- 30° F) startability per 3.6.3.2.1 for severely cold areas only per 3.6.3.2.1.
17. **High altitude operations;** engine adjustments and/or emission control(s), and test if available and applicable per 3.6.4.3.
18. **Extrication equipment;** specified in 3.11.2.1. (This equipment may normally be carried on the ambulance unless it is routinely accompanied by a rescue vehicle. Select which items, (a through jj) and fully detail specific items wanted by brand, model, size, quantity, as required.
19. **Body rubrails;** for Types I and III, as specified in 3.9.7.5.
20. **Automatic transmission heavy-duty oil cooler;** additional unit (for very hot areas only), per 3.6.5.2.1 when not furnished from the chassis manufacturer.
21. **Folding style step;** at ambulance body rear loading doors, per 3.9.6.
22. **Front bumper override**; grille, and radiator protection, per 3.9.6.1 (grille guard) and 3.9.6.2 (bumper guards).
23. **Emergency safety kit**; in sturdy metal/plastic carrying case containing: 3 bi-directional reflective triangles (approved FMVSS 125), 6 fuses, minimum 15 minutes each with holders, 2 sets of chassis circuit electrical system spare fuses.
24. **Towing devices;** not less than 2 towing devices on the front of the vehicle. (if permitted by chassis manufacturer).
25. **Spotlight**; 360 degree horizontal and 90 degree vertical adjustment, remote controlled per 3.8.4.
26. **Radio-Chassis manufacturers**; AM/FM, as specified. Additional speakers shall be furnished as specified.
27. **Reserved.**

(*)28. **Seat;** on left, street side of vehicle (right side of patient) (see 3.1.5.1 & 3.11.4).

29. **Cab Console;** between driver and passenger seat. Purchaser shall specify layout and dimensions (see 3.9.2 & 3.10.15.2).
30. **Running boards;** (see 3.9.7.2).
31. **Mud flaps;** (see 3.9.7.3).
32. **Interior/exterior compartment;** two shelves, at the front right corner of the body with exterior access per 3.11.1.2 (for Types I & III).
33. **Map light;** dash or ceiling mounted as required by the purchaser and shall be separately switched. Purchaser shall specify type or model required (see 3.8.5).
34. **Siren system;**. Specify features e.g. foot switch or other requirements (see 3.14.6).
35. **Audible warning indicator;** in the cab, that sounds only when the patient or equipment compartment(s) are open and when the vehicle is placed in forward or reverse gear.
36. **Air horns; (see 3.14.7)**

(*) Items furnished as standard equipment when Configuration "A" (ALS) is specified (see 3.1.5.1).

Downloaded from http://www.everyspec.com

3.15.4 MEDICAL, SURGICAL, AND BIOMEDICAL EQUIPMENT.

Ambulance purchaser's and operating authorities should, at a minimum, provision their ambulances (for ALS or BLS) with durable equipment and disposable supplies as recommended by the American college of Emergency Physicians,(ACEP), and the National EMSC Resource Alliance (see section 2.2 for addresses).

When specified (see 6.2-ss), the ambulance shall be equipped with the following:

M1. **Rail system;** a medical device(s) attaching aluminum rail, with quick release mounting mechanisms, fastened securely in the action area at the side of the primary cot. Rail length 152 cm to 229 cm (60 to 90 in.) long. Medical devices shall be rail mounted, and 3 spare mounting devices supplied per 3.11.1.1.

M2. **I.V. telescoping pole;** for primary cot (see 3.11.9).

M3. **Electric clock;** 12 volt DC chassis powered, with sweep second hand, illuminated (when module is turned on), 10 cm (4 in.) minimum dial. Clock shall be located on the action wall and shall be visible to the EMT from both the EMT seat and squad bench. Other types of clocks as specified or approved by the purchaser may be furnished.

M4 **{Reserved}**

M5. **Sphygmomanometer;** 15 cm (6 in.) dial type, wall mounted or rail mounted, when M1 is specified, cuff, stethoscope, inflating bulb and mounting. Specify size, obese, adult, child, or pediatric.

M6. **Squeeze bag-valve-mask system;** portable, for artificial ventilation (see 3.12.2.1).

M7. **Oxygen flowmeter;** (pressure compensated) and humidifier (see 3.12.1.1), with specified disconnect fittings. Specify quantity.

M8. **Remote oxygen indicator;** for main bottle. Specify type (see 3.12.1).

***M9.** **Oxygen outlet;** A second, self sealing, duplex oxygen outlet for the secondary patient to be located at patients head area (see 3.12.1). Additional outlets may also be specified.

M10. **Cot;** for primary and secondary patients (per 3.11.5). Specify desired models. Cot straps per 3.11.8.1.

M11. **A lower-extremity traction splint;** with all necessary straps, attachments, and case. Specify type and adult, pediatric size or universal type).

M12. **Emergency medical jump kit or drug kit;** specify model (case only).

M13. **Scoop stretcher;** specify model.

M14. **Backboards;** wood, aluminum, or plastic, one long-minimum size 183 x 41 cm (72 x 16 in.), one short minimum size 81 cm x 41 cm (32 x 16 in.) with three straps. Boards shall be translucent to X-Rays. Specify type and quantity.

M15. **Reserved**

M16. **Combination stretcher;** in lieu of folding stretcher (see 3.11.5.1 & 3.11.4).

M17. **Oxygen;** portable unit (see 3.12.2).

M18. **Suction aspirator;** portable; battery or gas powered (see 3.12.4). Specify type.

M19. **Mast;** pneumatic trouser kit, compartmentalized individually inflatable sections, complete with carrying case. Specify adult, pediatric and model.

M20. **Oxygen-powered;** manually triggered, positive pressure valve with mask (see 3.12.2.2). Specify type of valve and quick disconnect fitting required.

M21. **Dual position cot fastener mounting assembly;** quick detachable type for center and side positions. Specify type (see 3.1.5 & 3.11.7).

M22. **Extrication device, adult, vest type;** (wrap around) extrication device to provide spinal immobilization for seated patient, complete with all necessary belts, head straps, padding, etc., and case. Specify type.

M23. **Extrication collar;** specify type and size (pediatric, extra small, short, medium, tall, etc.).

M24. **Automatic external defibrillator (AED) or monitor defibrillator;** (specify desired model)

M25. **Cardiac Monitor/defibrillator mounting bracket**. Specify type of bracket.

M26. **Pediatric, spinal immobilization/ transport device;** with cot interface capability. Device shall be complete with all straps, attachment devices, and case. Specify desired model (see 3.11.8.2).

M27. **Reserved.**

M28. **Infant/ child carrier;** per 3.11.8.2.

M29. **Automatic Resuscitation/ ventilator;** (see 3.12.2.3). Specify type desired and type oxygen system interface device (see 6.2-ll).

(*) Items furnished as standard equipment when Configuration "A" (ALS) is specified (see 3.1.5.1).

Downloaded from http://www.everyspec.com

3.16 PREPARATION FOR PAINTING, COLOR, AND MARKINGS.

3.16.1 PREPARATION FOR PAINTING.

Ambulance body and all attached equipment exterior surfaces, except polished metal parts, shall be thoroughly cleaned, treated, and coated with a firm primer and preservative with rust inhibiting properties, and painted in the finish color as specified (see 6.2-tt). Ferrous metal interior surfaces shall be painted or, when not exposed for painting, shall be treated or coated to resist corrosion. Chassis and chassis frame components shall be preserved and finished in accordance to industry's standard practice.

3.16.2 COLOR, PAINT, AND FINISH.

Unless otherwise specified, (see 6.2-tt), the exterior color of the ambulance shall be gloss white in combination with a solid uninterrupted orange stripe and blue lettering and emblems. The stripe should be as close to parallel as possible with the road but a stripe transition angle is acceptable to connect the module beltline stripe with the chassis stripe. The exterior finish on painted metal modular bodies and metal roofs on Type II ambulances shall be an acrylic composition urethane or polyurethane paint. The final stage manufacturer's painted components shall have a paint film not less than 1.25 mils. thick and a minimum total thickness of 4 mils., including primers. The orange stripe shall not be less than 15 cm (6 in.) wide, nor more than 36 cm (14 in.) wide and shall encircle the entire ambulance body at the belt line below the bottom edge of cab windows but may exclude the front of the hood panel. The orange stripe, as specified by the purchaser (see 6.2-tt) may be reflective tape conforming to Para. 3.16.4 or be painted and may be edged/pin striped in black or blue. This single, solid band (except when interrupted by windows, locks, etc.), when viewed horizontally, shall appear as a stripe near parallel to the road. The interior finish shall be the manufacturer's standard light color harmonizing with the color of upholstery. The final film of painted surfaces shall be smooth and uniform, free of grit, streaks, blushing, runs, sagging, blisters, "fish-eyes, "orange peel", pinholes, or other surface irregularities. Exterior finish paint shall not be required on the underbody and inside surface of the body skirting.

NOTE: USERS SHOULD AVOID SPECIFYING DARKER OR ALTERNATE COLORS BECAUSE OF THE ADVERSE EFFECT ON VEHICLE VISIBILITY, AND INCREASED HEAT LOAD THAT THE DARKER COLORS IMPOSE ON THE AIR CONDITIONING SYSTEM. SPECIFICALLY, THE WHITE/ORANGE COMBINATION PROVIDES THE MOST VISIBLE VEHICLE UNDER DIFFERENT LIGHT CONDITIONS, (E.G. MERCURY AND SODIUM VAPOR LIGHTS), AS WELL AS PROVIDING, ON AN INTERNATIONAL BASIS, THE MOST EASILY RECOGNIZED COLOR CONFIGURATION.

3.16.2.1 COLOR STANDARDS AND TOLERANCES.

The exterior surface including the wheels shall be manufacturer's standard gloss white. The ambulance colors orange, stripe or band and blue markings shall be the same as specified Orange and Blue in American National Standard Z535.1, Safety Color Code. They shall comply with the tolerances expressed in terms of Munsell hue, value (lightness), and chroma (saturation).

Downloaded from http://www.everyspec.com

Color tolerance charts containing the color standards and tolerances for Ambulance Orange and Ambulance Blue are available from the Department of Transportation, Research and Special Programs Administration, http://hazmat.dot.gov/commsupp.htm

3.16.3 SALT SPRAY RESISTANCE.

Treated exterior sheet metal of the ambulance body (except OEM Type II van) shall be capable of withstanding 250 hours of salt spray tested in accordance with ASTM B 117-64. The specimen used for the salt spray test shall be run through all steps of the cleaning and treating process, including priming. The primed specimen shall be scored from corner to corner using a sharp knife. After the test, the specimen panels shall exhibit no failure and not more than 3 mm (1/8 in.) rust or blister creepage from the scored lines.

3.16.4 EMBLEMS AND MARKINGS.

The material for the emblems and markings shall be applied using reflectorized material conforming to Federal Specification L-S-300, Type I, Class 1 or 3 reflectivity 1. The reflective color used shall be blue (color a) and white (color i) when applicable. The emblems and markings shall be of the type, size, color, and location as follows:

A. Front markings

1. The word "AMBULANCE", mirror imaged, shall be in block, blue, die cut style letters, not less than 10 cm (4 in.) high, centered above the grille, on the orange or white background. The placement of the word ambulance on the curved surface of the hood or on a flat plastic type bugscreen is permitted.

2. A "Star of Life" in 7.6 cm (3 in.), blue, die cut style, with a white border, conforming to Figure 4 (size A) shall be located both to the right and left of the word "AMBULANCE."

B. Side and rear markings

1. The word "AMBULANCE" shall be in block, blue, die cut style letters of not less than 15 cm (6 in.) in height, centered, with a white border, alongside or under the "Star of Life" on each side and rear of the vehicle body.

2. A "Star of Life", not less than 40.6 cm (16 in.), in blue, die cut style, with a white border, conforming to Figure 4 (size C), on the right and left side panels. A "Star of Life" emblem, size B, shall be provided on each rear door.

3. All additional lettering and markings (required by the purchaser) should be below the word "AMBULANCE", except the units abbreviated identification lettering/number, which may be located on the uppermost white space of the front, rear, and sides.

C. Top markings

A "Star of Life", of not less than 81 cm (32 in.) (size D) in blue, die cut style, conforming to Figure 4 (may be without the white Staff of Aesculapius), shall be provided on the ambulance rooftop.

Downloaded from http://www.everyspec.com

3.17 UNDERCOATING.

Unless the ambulance is rustproofed, the vehicle shall be undercoated for sound deadening, corrosion, and stone damage protection. A commercial, sandless, petroleum base undercoating or other materials providing equivalent protection, shall be applied to the underbody and under chassis sheet metal surfaces to a thickness of 1.6 mm to 3.2 mm (1/16 to 1/8 in.), except to the drive shafts, drain holes, lubrication points, engine/transmission oil pans, fuel tanks, heavy castings, suspension components, heat shields, heat diffusing devices, catalytic converters, and areas 30.5 cm (12 in.) or less from the exhaust system(s) as well as other areas specifically excluded by the chassis manufacturer. These areas shall be kept free of coating material. Chassis frame, underside of engine compartment hood, and underbody surfaces in excess of 3.2 mm (1/8 in.) thickness, or that are inaccessible without removing vehicle fuel tank(s) or other major components shall not require undercoating.

3.18 RUSTPROOFING

When specified (see 6.2-uu), ambulance shall be rustproofed in accordance with Fed. Std. No. 297.

3.19 MARKINGS, DATA PLATES, WARRANTY NOTICE, ETC.

Unless otherwise specified (see 6.2-vv), final stage manufacturer's caution plates and identification plates shall be conspicuously installed for all equipment, etc., furnished requiring such notices. Other than the manufacturer's trademark(s) names, no other identification than that authoritatively specified shall be shown on exterior of the vehicle. The ambulance/vehicle manufacturer's "Star of Life" certification shall be provided on a placard or label as shown below, permanently affixed and easily visible in the ambulance oxygen compartment (see 4.3).

SAMPLE LABEL

CERTIFIED "STAR OF LIFE" AMBULANCE

MFG BY _____ DATE OF MANUFACTURE MO, YR_____

ADDRESS _____

CITY _____ STATE___ ZIP _____

This Ambulance conforms to Federal Specification KKK-A-1822 in effect on the date of manufacture shown above.

AMBULANCE IDENTIFICATION NUMBER _____

TYPE - CLASS - FLOOR PLAN - SERIAL NO.

CURB WEIGHT	PAYLOAD MAX	GROSS WT. MAX
_____ kg/lbs.	_____ kg/lbs.	_____ kg/lbs.

Downloaded from http://www.everyspec.com

Additionally, all ambulances shall display a decal or sticker providing at least the following information: contract number; purchaser order number; date of delivery, month and year; and the warranty time, in months and miles (GSA Form 1398 or equal). Apply this data to the right or left front door lock face or door jam after final inspection and acceptance by the purchaser. As specified (see 6.2vv) by the procuring activity for the appropriate military service, identification markings and data plates, shall be provided conforming with MIL-STD-1223.

3.20 MANUALS, AND HANDBOOK OF INSTRUCTION.

The supplier shall furnish with each ambulance, at the time of ambulance's acceptance, one copy of the reference handbook as specified in 6.8 and herein. This reference handbook shall provide instructions for the operation, care, and repair for all ambulance related accessory, component equipment, and system(s) furnished as part of the emergency medical care vehicle. This handbook shall also contain all installation instructions, drawings, schematics wiring diagrams, illustrations, and safety precautions to insure proper management, operation and maintenance. The chassis manufacturer's repair manual and parts book shall be furnished when specified (see 6.2-ww).

3.21 PREDELIVERY INSPECTION AND SERVICING.

The supplier prior to acceptance and inspection of the ambulance(s) shall service and inspect each vehicle in accordance with the chassis manufacturer's approved predelivery form, and the ambulance manufacturer's predelivery (test, inspection, and road test) form. A signed copy of these forms (check sheets) shall be furnished with the vehicle (see 6.8). Servicing shall comply to ambient temperatures and conditions applicable with the route of transport to the consignee's ultimate destination (see 5.1). Servicing shall include all tank(s) full of fuel; checking to determine satisfactory and complete operation of all mechanical and electrical features, equipment and system; elimination of rattles, noises, and squeaks; cleaning the interior and exterior. Thus the vehicle shall be delivered ready to use.

3.22 SPECIAL REQUIREMENTS.

Purchaser shall specify (see 6.2-xx) additional requirements and state unusual operating conditions, miscellaneous items, permissible exceptions, marking, etc., not specified herein. If in conflict with the manufacturer's standards and options, those specified shall take precedence. Contractor shall comply to the requirements of paragraph 6.3.

3.22.1 OVERSEAS VEHICLE REQUIREMENTS.

When specified (see 6.2-yy), the following equipment changes, items, devices, and adjustments to systems shall be furnished:

a. Left dip headlights (as used on right-hand drive vehicles) adjusted for driving on the left side of the road (prior to shipment).

b. Speedometer-odometer, calibrated in kilometers.

3.22.2 EXPORT VEHICLE SAFETY AND EMISSIONS REQUIREMENTS.

Unless otherwise specified (see 6.2-yy), export vehicle(s) shall conform to applicable safety standards of U.S.A. Vehicles exported to countries marketing only leaded gasoline

Downloaded from http://www.everyspec.com

Vehicle modifications needed for leaded fuel operation shall be made prior to shipment. Vehicle(s) being offered/supplied with catalytic converters shall be identified in each bid.

3.22.3 TIEDOWN POINTS.

When specified (see 6.2-yy), hard points (tow hooks, bumpers, axles, or other component points) suitable for use as tiedown points for the vehicle shall be identified. Identification of the points shall be provided by stenciling instructions and applying data plates to the vehicle or by supplementary instructions included with each copy of the owner's-operator's manual. Each identified tiedown or hard point shall be capable of withstanding its proportionate share of the GVWR.

3.22.3.1 LIFT POINTS.

When specified (see 6.2-yy), a minimum of four hard points for use as lift-points shall be identified. Identification of the points shall be provided by stenciling instructions and applying data plates to the vehicle or by supplementary instructions included with each copy of the owner's-operator's manual. Each identified hard point shall withstand without permanent deformation a working load equal to its proportionate share of the GVW and shall have an ultimate strength of at least 1.5 times the GVW. In addition, slinging provisions shall be located so that:

a. Attached sling legs shall converge over the center of gravity of the vehicle when at its GVW.

b. The attached sling apex does not exceed a height of 7.3 m (24 feet) above the lowest extremity of the equipment when suspended with each sling leg at a 45 degree maximum true angle.

3.23 WORKMANSHIP.

Defective components shall not be furnished. Parts, equipment, and assemblies, which have been repaired or modified to overcome deficiencies shall not be furnished without the approval of the purchaser. Welded, bolted, and riveted construction utilized shall be in accordance with the highest standards of industry. Component parts and units shall be manufactured to definite standard dimensions with proper fits, clearances, and uniformity. General appearance of the vehicle shall not show any evidence of poor workmanship.

The following shall be reason for rejection:

1. Rough, sharp or unfinished edges, burrs, seams, sharp corners, joints, cracks, and dents.
2. Non-uniform panels. Edges that are not radiused, beveled, etc.
3. Paint runs, sags, orange peel, "fish eyes", etc., in addition to 3.16.2 and any other imperfection or lack of complete coverage.
4. Body panels that are uneven, unsealed, or have voids.
5. Misalignment of body fasteners, glass, viewing panels, light housings, other items with large or uneven gaps, spacing etc. such as door, body panels, and hinged panels.
6. Improper body design or interface with the chassis that could cause injury during normal use or maintenance.

Downloaded from http://www.everyspec.com

7. Improperly fabricated and routed wiring or harnesses.
8. Improperly supported or secured hoses, wires, wiring harnesses, mechanical controls.
9. Loose, vibrating, abrading body parts, components, subassemblies, hoses, wiring harnesses or trim.
10. Interference of chassis components, body parts, doors, etc.
11. Leaks of any gas or fluid lines, (AC, coolant, oil, oxygen, etc.)
12. Noise, panel vibrations, etc.
13. Sagging, non-form fitting upholstery or padding.
14. Incomplete or incorrect application of rustproofing.
15. Inappropriate or incorrect use of hardware, fasteners, components, or methods of construction.
16. Incomplete or improper welding, riveting.
17. Visual deformities.
18. Lack of uniformity and symmetry where applicable.
19. Unsealed appurtenances or other body components, gaskets, etc.

In addition, any deviation from specification requirements or any other item, whether or not stipulated herein, that affects form, fit, function, durability, reliability, safety, performance or appearance shall be cause for rejection.

Downloaded from http://www.everyspec.com

4. Quality Assurance Provisions

4.1 RESPONSIBILITY FOR INSPECTION AND TESTS.

The contractor is responsible for the performance of all inspections and test requirements specified herein. The supplier may use his own or any other facilities suitable for the predelivery and acceptance inspections unless disapproved by the purchaser. The purchaser reserves the right to perform any of the inspections and tests set forth in the specification where such inspections are deemed necessary to assure supplies and service conform to the specification and contract. The contractor shall provide the purchaser's inspection representatives with the manufacturers readily available instruments and all such assistance as they may find necessary.

4.1.1 PURCHASER VERIFICATION.

Quality assurance operations performed by the supplier will be subject to purchaser verification at unscheduled intervals. Verification will consist of observation of the operations to determine that practices, methods, and procedures of the supplier's inspection are being properly applied. Failure of the supplier to promptly correct observed deficiencies shall be cause for suspension of acceptance of the ambulance(s) until conformance to specification criteria has been demonstrated.

4.2 CLASSIFICATION OF INSPECTION (FOR PURCHASER'S ACCEPTANCE).

Purchasers should select either or both of the following methods of inspections (to specify see 6.2-zz):

1. Source inspection (see 4.2.1).
2. Destination examination (see 4.2.2).

4.2.1 SOURCE INSPECTION.

Ambulance(s) shall be inspected upon completion by the purchaser prior to shipment from manufacturer's factory or assembly plant and may consist of the following:

a. Workmanship inspection (see 3.23).

b. Quality conformance inspection (see 4.2.3)

c. First production ambulance inspection (see 4.2.5).

Downloaded from http://www.everyspec.com

4.2.2 DESTINATION EXAMINATION.

When specified (see 6.2-zz), the contracted ambulance shall be examined at the destination. The vehicle(s) shall be visually examined to determine compliance to the contract requirements and the quality conformance inspection of 4.2.3. Vehicle component chassis failures and other minor defects may be accepted subject to correction by the contractor/ manufacturer of those points.

4.2.3 QUALITY CONFORMANCE INSPECTION.

Quality conformance inspection applies to all ambulance(s) offered for acceptance under the contract. Quality conformance inspection shall consist of (a) through (d) as follows:

a. Workmanship inspection (see 3.23).

b. Operational checks (see 4.2.4).

c. Water spray test (see 4.4.5).

d. Examine ambulance handbook (see 3.20).

4.2.4 OPERATION CHECKS.

Operational checks of the ambulance shall cover all controls, electrical systems, and devices, doors, windows, cabinets, accessories, in and outside the ambulance. Ambulance shall be driven at highway speeds, turns made at minimum radii, brakes tested for dependability, checked for rattles and squeaks, and compliance to 3.21. All controls and mechanisms shall function and operate as intended.

4.2.5 FIRST PRODUCTION AMBULANCE INSPECTION.

When specified (see 6.2-aaa), the first production ambulance of each Type and Class specified under contract shall be inspected. This first ambulance shall be completely representative of the balance of the vehicles to be delivered under the contract. The purpose of the inspection shall determine vehicle conformity to the contract. The ambulance shall be inspected by the contractor at his plant under the direction and in the presence of purchaser's representative(s). Inspections shall be conducted during normal weekday working hours. The cost of inspections, examination, all tests, and vehicle support, exclusive of personal expenses incurred by participating purchaser's representatives shall be borne by the contractor. Acceptance of the first production vehicle shall not constitute a waiver by the purchaser of any rights under the provisions of the contract.

4.2.6 INSPECTION FAILURE OF AMBULANCE(S).

Failure of a production ambulance to have the certifications required or successfully complete the examinations and tests shall be cause for non acceptance of any of the contract quantity, until deficiencies and evidence of the corrective action preclude recurrence of similar deficiencies. Failure of the vehicle to successfully complete inspection shall not constitute an excusable delay in meeting scheduled deliveries.

4.2.7 PRODUCTION SAMPLE.

Upon acceptance of the first production ambulance, it shall remain at the manufacturing facility as a production sample and shall be the last vehicle shipped on the contract. The contractor shall maintain the vehicle in a serviceable condition for the duration of the

Downloaded from http://www.everyspec.com

contract. Vehicle shall be then cleaned, serviced, and refurbished to the extent required for delivery of a new vehicle to the purchaser.

4.3 "STAR OF LIFE" CERTIFICATION REQUIREMENTS.

4.3.1 QUALIFYING PROVISIONS.

The manufacturer/supplier is obligated to certify to the Government/ purchasers that the ambulance bearing the "Star of Life," its components, and equipment meet or exceed all the requirements and tests set forth in this specification. The certification and "Star of Life" label (3.19), verify that the ambulance conforms to this specification on the date of manufacture. Compliance for a "Star of Life" label is defined as certification backed by confirmed verifications of inspections and tests. The verifications shall be in possession of the issuer and presented if and when challenged. For the benefit of purchaser's procuring activity evaluation and review, prior to or with each proposed bid (solicitation), the bidder/supplier shall provide and forward representative material of their "Star of Life" ambulance(s). This material shall include: a letter certified by a company officer, stating that the delivered ambulance(s) shall comply with paragraphs 4.3.2 thru 4.3.6. Failure to provide certification, at the time the vehicle is presented for inspection, will deem the vehicle unacceptable and shall constitute grounds for termination in accordance with the terms of the contract. Also included shall be: general specification data, exterior and interior pictures, dimensional drawings/data, etc., and other information as requested.

4.3.2 DOCUMENTATION OF "STAR OF LIFE" CERTIFICATION.

The ambulance manufacturer shall compile complete certified documentation of verifications for all the tests required under 4.4 conforming to 4.3.4 and 4.3.6 in a booklet similar to that described in paragraph 6.8, for each Type and Class ambulance intended to be marketed to the Emergency Medical Care industry as a "Star of Life" ambulance.

4.3.4 CRITERIA OF CERTIFICATIONS.

The testing and inspection(s) required for certification shall be performed by either an independent testing facility or the ambulance manufacturer's own testing facility. In-plant tests shall be supervised by a staff registered professional engineer, or consulting registered professional engineer. The individual certifications will remain valid so long as they are applicable to the vehicle model, component(s) and equipment offered as tested under this specification, and are furnished without alterations, for five years, then shall be recertified. Certifications that appear on the vehicle need not be re-submitted (i.e., Department of Transportation, (DOT); Environmental Protection Agency, (EPA), etc.). Certification(s) will be acceptable in lieu of actual verification test during inspections (4.2) providing supporting verifying data complying to 4.3.6 is on file for examination. Certification from chassis manufacturer and individual equipment manufacturers are acceptable providing they are not part of a system(s) or altered and in accordance with 4.3.5. Type certifications of individual components and equipment products are acceptable.

Downloaded from http://www.everyspec.com

4.3.5 CERTIFICATION LETTER FORMAT.

Certification letters submitted for the ambulance model, components, and equipment being certified shall contain the following information on supplier's letterhead stationery: to whom certifying, date, units or items, manufacturer and address, date product tested, model number, and specification data, applicable specification references and test requirement, summary of the test report, a certifying statement, and official signature.

4.3.6 CERTIFICATION VERIFICATION DATA REPORTS.

The testing facility (see 4.3.4) for each certification shall supply supportive verification data and information on letterhead stationery, for whom tested, report date, name of sample product or device, manufacturer's address, serial and model number(s), specification referral and amendment number(s), and test requirement(s), test facilities used and location, test equipment used, test procedure, test results, verifying test data, photographs, test conclusion(s), witness(es), and authorized signature.

4.4 TESTS.

4.4.1 TEST CRITERIA.

The ambulance shall be prepared for operation in accordance with chassis manufacturer's recommendations and 3.21. The ambulance shall be manned and loaded when applicable, to simulate the maximum payload required for the Type, Class, and plan being tested. Road tests and test course(s) shall be documented with pictures and route map. Test room(s) designed and equipped to simulate ambient temperature environments shall be used to perform tests.

4.4.2 PERFORMANCE TESTS.

The following ambulance items, systems, and equipment shall be inspected, tested, and verified for conformance to the specification:

a. Ambulance physical dimensions (see 3.4.11 through 3.4.11.6 and 3.10 to 3.11.4).
b. Vehicle weight distribution (see 4.4.3 and 4.4.3.1).
c. Road test and performance tests (see 4.4.4).
d. Exterior mounted devices tested for temperature conditions (see 3.4.2).
e. Cooling system (see 3.6.4.5).
f. Electrical systems and components, inspect and verify compliance (see 3.7 to 3.8.5.2).
g. Electrical generating system (see 3.7.6 through 3.7.6.3).
h. Electromagnetic radiation and suppression (see 3.7.12), "type approval" is acceptable.
i. Warning light and siren system(s) (see 3.8.2 to 3.8.2.3, and 3.14.6).
j. Tests of ambulance body structure (see 3.10.5 and 3.10.9).
k. Patient compartment interior surfaces, FMVSS 302 (see 3.10.17).
l. Oxygen system and tests (see 3.11.3, 3.12.1, and 3.12.1.1).
m. Litter fastener and anchorage test (see 3.11.7).
n Suction aspiration system test (see 3.12.3 and 3.12.4).

Downloaded from http://www.everyspec.com

o. Environmental systems tests (see 3.13.1 to 3.13.7, and 3.6.3.2).

p. Patient compartment sound level test (see 3.13.8).

q. Painting, color, and marking (see 3.16 to 3.16.4).

r. Manuals and handbook (see 3.20 and 6.8).

4.4.3 VEHICLE WEIGHTS.

The vehicle shall be weighed to determine curb weight and distribution of curb weight on front and rear axle. The imposed loading on front and rear axle shall be computed using the curb weight and the payload as specified in 3.5 through 3.5.6. Calculated imposed loads on front and rear axle shall be utilized to ascertain that suspension, axles, and tires furnished are of adequate capacity to meet contract requirements.

4.4.3.1 WEIGHT DISTRIBUTION TOLERANCE.

The mathematical method to calculate the weight distribution shall be in accordance with AMD Standard 013.

a. Find the curb weight on each wheel of a given axle;

b. Divide the weight of each wheel by the total curb weight of both wheels (i.e., curb weight of the axle), times (X) 100 = percentage of weight on each side;

c. Subtract the smaller percentage from the larger percentage;

d. This is the percent difference between the left and right side of the axle. If this difference is 5 percent or less, that particular axle's weight distribution has met the provisions of 3.5.4.

4.4.4 ROAD TEST.

The vehicle shall be subjected to a minimum 241 km (150 mile) road test of which 121 km (75 miles) shall be continuous miles on paved highways at highway speeds up to 113 km/hr (70 mph); 48 km (30 miles) on city streets; 24 km (15 miles) on gravel or dirt roads at speeds up to at least 56 km/hr (35 mph); and not less than 8 km (5 miles) in simulated or actual cross-country operation at speeds applicable to the terrain. Cross-country operation is defined as travel over open fields, rolling and side-sloping hills, rough and muddy terrain. Class 2 vehicles shall demonstrate cross-country operation in 4-wheel drive for an additional 32 km (20 miles). Ambulances shall meet performance requirements specified in 3.4.4 through 3.4.10 during road tests or by certification. Balance of the 241 km (150 miles) road test may be accumulated during other tests and checks requiring vehicle movements. After completion of the road test, vehicle shall be subjected to the water spray test (see 4.4.5). Road test may be performed at any ambient temperature.

4.4.4.1 TEST FAILURE OF FIRST AMBULANCE.

Vehicle utilized for the road test shall successfully complete 241 km (150 miles) of test. Rejection of the test vehicle shall be for deficiencies, including but not limited to the following:

a. Damage caused by collision.

b. Failure of any major component.

c. Vibration due to misalignment of wheels, frame, driveshaft, or defective tires, etc.

Downloaded from http://www.everyspec.com

d. Vibration due to type of body construction or mounting.

e. Evidence of abnormal tire wear due to misalignment or unbalanced wheels/tires.

f. Failure of any vehicular safety device such as brakes, steering assembly, windshield washers and wipers, or electrical circuits.

g. Evidence of structural weakness in any part of the vehicle, vehicle components, or accessories.

h. Loose mountings of parts or accessories due to workmanship or vehicular operation.

i. Failure of any vehicular performance requirements.

4.4.5 WATER SPRAY TEST.

The ambulance shall be subjected to a water spray test in accordance with AMD Standard 010 for a minimum of 15 minutes. The spray shall be delivered by nozzles operating at 172 kPa (25 psi) water pressure, sufficient in number and placed approximately 91 cm (3 ft) from the body to afford full coverage of sides, roof, front, rear, and undercarriage of the vehicle. Ambulance undergoing quality conformance inspection (see 4.2.3) shall be subjected to water spray test for not less than 2 minutes duration. Evidence of water leakage shall be cause for rejection until leaks are corrected.

4.4.6 OXYGEN SYSTEM TEST.

The installed medical oxygen piping and outlet system (see 3.12.1) shall be leak tested at 1033 kPa (150 psi) pressure, for a time period of four hours. The system shall be tested in accordance with AMD Standard 015 with dry air or nitrogen gas or equal and kept decontaminated. After the successful completion of tests, the system shall be capped then tagged with date and signature of person and firm performing the tests.

Downloaded from http://www.everyspec.com

5. Preparation for Delivery

5.1 PREPARATION.

Unless otherwise specified (see 6.2-bbb), the ambulance(s) shall be preserved and packaged for mobile delivery in accordance with the supplier's standard commercial practice, insuring carrier acceptance and safe delivery to destination in compliance with regulations applicable to the mode of transportation.

Downloaded from http://www.everyspec.com

6. Notes

6.1 INTENDED USE OF SPECIFICATION.

The intended use of this specification is to define and procure a certified "Star of Life" ambulance.

6.1.1 FEDERAL SPECIFICATION COVERAGE.

This Federal specification does not include all the varieties of Emergency Medical Services vehicles commercially available as may be indicated by the title of the document. This specification covers only the ambulances approved to display the "Star of Life" symbols® and purchased, to provide ambulance services, under contract, and funded /authorized by the Federal and State Governments of the United States.

6.1.2 PRECAUTIONS AND OBSERVATIONS..

Purchasers should read the entire document before requisitioning an ambulance, in order to be knowledgeable of just what equipment is standard, and which options need to be exercised. Due to the variety of ambulance equipment or features, some options may be incompatible with the model desired (reference chassis and ambulance manufacturer's data books).

6.1.3 DEFINITION OF GOVERNMENT-PURCHASER

Government or purchaser as used in the context of this document means the Federal, State, or political subdivision Government, or any purchaser who cites this specification.

6.2 ORDERING DATA.

Purchasers should prepare their procurement document(s) (specification, requisition, contract) in the following sequence. Select the preferred options and provide the necessary information requested:

a. Title, number, and date of this specification and amendment number, if any.

b. Quantity, Type (I, II or III, I-AD, III-AD), and Class (1 or 2), of the ambulance required (see 1.2.1) and chassis brand if desired. See 3.1.2 thru 3.1.4.

c. Patient compartment configuration A (ALS) or B (BLS). B (BLS is standard on all types). If ALS is required (on Types I & III), specify Configuration A (see 3.1.5).

Downloaded from http://www.everyspec.com

NOTE: TYPE II VEHICLES MAY BE ORDERED WITH SOME ALS FEATURES DEPENDING ON MANUFACTURER.

d. Special performance requirements and/or other chassis that may be needed for special use applications such as carrying additional rescue/extrication equipment or heavily equipped patient/neonatal transport ambulances (see 3.4.1).

e. Fuel range. OEM manufacturers maximum fuel tanks shall be standard. Specify if reduced fuel capacity required (see 3.4.9 & 3.6.4.4).

f. Length. Standard maximum length is 671 cm (22 ft.). Specify if additional length is required for specific applications (see 3.4.11.1).

g. Width. For modular units, wide bodies on wide track axles are standard. Specify if a narrower body on a dual or single rear wheel chassis is required (see 3.4.11.2).

h. Height. 279 cm (110") is the maximum standard height. Specify if other heights are required, e.g. for air transportability (see 3.4.11.3).

i. Payload. Purchaser may specify additional payload if available from manufacturer for a specific model or a medium-duty chassis when available (see 3.5.2).

j. Engine power unit (diesel is standard). Only if absolutely necessary should a gasoline engine be specified (see 3.6.3 to 3.6.3.4).

k. Air pollution controls. Cite where ambulance will operate, State and county, and/or if for export, name country (see 3.6.4.3 and 3.22.2).

l. Drive train and transmission. Automatic transmission is standard for all models. Specify if a manual transmission or other drive train options are required, other than that specified. Check manufacturer's data (see 3.6.5 through 3.6.5.9).

m. Wheels/Axles. Wide, dual rear wheel axles are standard equipment on all Type I and III units (3.6.5.6). Specify if a narrow dual, or a single rear wheel axle is specifically desired. NOTE: Ambulance body widths are established in 3.4.11.2. Specify if narrow, modular type bodies with single or dual rear wheels is required.

n. Tires. "All Season" steel belted radials are standard for all models. Chassis manufacturer's O.E. mud and snow, or all purpose type tires may be desirable and specified on 4x4 vehicles (see 3.6.8 to 3.6.12).

o. Spare. Purchaser may state specific location of spare/wheel, when furnished, or delete requirement for spare tire. NOTE: Purchaser should consult with ambulance manufacturer since moving spare can affect weight distribution of the vehicle (see 3.6.10).

p. Intermittent wipers. Specify if required. See 3.7.4.

q. Electrical generating system. Suppliers are required to provide adequate generating capacity in ambulances as manufactured; if reserve generating capacity is desired for owner installed electrical devices beyond that already provided, specify minimum, additional, generating capacity required (see 3.7.6).

r. Battery location. Specify other locations (see 3.7.7).

Downloaded from http://www.everyspec.com

s. 12 Volt DC power. Specify if other than standard 12 volt DC outlets, military type connector, or higher current capacity is required to power medical equipment, etc. (see 3.7.7.3).

t. Patient compartment controls. Specify if other than standard EMT panel/controls, instruments, etc. are required (see 3.7.10).

u. Electromagnetic Radiation Type Certification by equipment and ambulance manufacturers is standard. Specify if entire vehicle shall be tested. (see 3.7.12).

v. Warning lights. Red, clear, and amber lights are standard. Specify other color(s) only if required by State or local regulations. Specify strobe, LED, HID, or quartz halogen. Specify if other automatic switching arrangements are required (see 3.8 through 3.8.2.5). Specify if automatic primary to secondary mode and automatic day/night switching arrangements are required. Standard system includes manual "Primary" and "Secondary" mode switch and, on strobe systems, a day/night dimming switch (see 3.8.2.3). Specify if a second rear amber is required.

NOTE: ADDITIONAL WARNING LIGHTS/ SYSTEMS ARE NOT NECESSARY AND SHOULD NOT BE SPECIFIED IN ORDER TO AVOID OVERLOADING THE ELECTRICAL SYSTEM, AND REDUCING USABLE PAYLOAD.

w. Flood and Loading Lights. Specify if two flood lights per side and two patient loading lights on the rear are required. (See 3.8.3)

x. Seats. Specify if bench type seat is desired or permitted on Type I vehicles. Specify if high back bucket type seats are required and specify if other than vinyl type upholstery is desired or acceptable (see 3.9.3).

y. Mirrors. Specify if other than standard mirrors are required, e.g. West Coast, integral convex, heated mirrors, etc. (see 3.9.5).

z. Bumpers and steps. On Class 2 vehicles, specify if other than standard step height is necessary for increased departure angles, e.g. severe off road use, air transportability (see 3.9.6).

aa. Fenders. Required per specification. Specify type (see 3.9.7.1).

bb. EMT Seating. Specify other than standard requirements. Specify if integral EMT/ child safety seat is required (see 3.10.3).

cc. Patient compartment length. 310 cm (122") is minimum required. Specify additional requirements (see 3.10.4).

NOTE: COMPARTMENT LENGTHS LESS THAN 310 cm (122") COULD RESULT IN REAR DOOR INTERFERENCE WITH TRACTION SPLINTS ON TALL PATIENTS.

Downloaded from http://www.everyspec.com

dd. Patient compartment height. Minimum height of 152 cm (60") required, specify additional requirements (see 3.10.4).

ee. Body construction. Aluminum is standard for modular ambulances. Specify if other materials are required or permitted (see 3.10.5 and 3.10.6).

ff. Dual hinged doors are standard on Type II. Specify if sliding door is required (see 3.10.8). Specify if other door opening widths/configurations are required for specific applications.

gg. Windows. Specify if other than standard, tinted, or when opening windows are required or permitted (see 3.10.14).

hh. Walkthru on Type II & III is standard. Specify if walkthru deletion is required (see 3.10.15 thru 3.10.15.2). When walkthru is deleted, a pass thru window shall be furnished and additional compartments above and below the window can be furnished as specified by the purchaser.

ii. Interior and exterior storage accommodations. Specify any specific additional requirements (see 3.11.1 to 3.11.4).

jj. Stretchers, cots, and litters. Specify specific cot fastening device, item(s) required, and any upgrading features preferred (see 3.10.1, 3.11.5 to 3.11.7, and 3.15.4 M10, M16, M21). Cots are optional and not standard with vehicle. Cot fastener is standard. Specify specific model.

kk. Oxygen system (on board). Specify if other than “M” size bottle and other than manufacturer’s standard location (see 3.12.1).

ll. Oxygen. Quick disconnect fitting for action wall and specified accessories. Specify type (see 3.12.1)

mm. Portable oxygen unit. Specify location of portable oxygen unit and spare bottle if other than location in 3.12.2.

nn. Suction aspirator system, electrically powered type, is standard. Gasoline powered vehicles may use engine vacuum systems (see 3.12.3 to 3.12.4).

oo. Air conditioning. Auxiliary Condenser. Specify if auxiliary condenser is required (see 3.13.5.1).

pp. Patient compartment sound level criteria. Specify if more stringent patient compartment sound level limits are required (see 3.13.8).

qq. Communication equipment. Two-way radio, telemetry modulator (local purchase of radio equipment and installations is recommended). Specify if contractor is to furnish and install the radio(s), and cite brand(s) acceptable, power output, frequencies needed, etc. Give complete details and provide a coordinator name, address, and telephone number (see 3.14 to 3.14.4). One antenna lead is standard. Specify additional antenna leads and locations. Specify location(s) of portable radio battery charging circuit leads (see 3.7.7.1, and 3.7.7.2).

rr. Siren. Specify if foot switch, or other siren upgrading features are required (see 3.14.6).

Downloaded from http://www.everyspec.com

ss. Additional systems, equipment, accessories, and supplies (see 3.15 through 3.15.4). Cite additional parameters, brand, model numbers, and/or equal, and details. User should be aware that additional equipment reduces usable payload capacity and if electrically operated reduces spare or reserve capacity that may be available and requires additional generating capacity (see 3.15.1).

1. Specify if automatically adjustable backup alarm is required. (Fixed sound level is standard) (see 3.15.2 d.)
2. Select optional vehicle equipment desired (see 3.15.3).
3. Select optional medical equipment desired (see 3.15.4).

tt. Paint. White-Orange is standard. Only if absolutely necessary, specify other requirements. Reflective tape may be specified for the orange band (see 3.16.2).

uu. Rustproofing. If required. Undercoating is standard, (see 3.18).

vv. Markings, data plates, and warranty notices. Specify if additional or military markings are required (see 3.19).

ww. Manuals and handbooks. State if chassis manufacturer's complete repair manual and/or parts book(s) are required (see 3.20).

xx. Special requirements. State any other additions and permitted changes or deletions in the specification (see 3.22).

yy. Overseas vehicle requirements. Select requirements (see 3.6.3.4 and 3.22.1 through 3.22.3.1), include tiedown points, liftpoint requirements, additional safety requirements and fuel requirements for the consignees location.

zz. Quality assurance provisions. Specify classification of inspection desired (see 4 through 4.2.7).

1. Source inspection (see 4.2.1) or
2. Destination examination (see 4.2.2).

aaa. First production ambulance inspection. State if required. If quantity contract see 4.2.5.

bbb. Preparation for delivery. Specify if different (see 5.1). State mode of delivery preferred.

ccc. Procurement requirements (see 6.3). Specify other purchaser's contractual requirements.

ddd. Foreign use. State any additional or different warranty requirements for foreign use applications see 6.4.3).

eee. Statement of origin. Specify if other ownership documents are required and locations to which they shall be forwarded.

fff. Light Emitting Diodes (LED) Stop, Tail, Directional, and Marker Lights (see 3.8.1). Specify LED lighting for reduced current draw and lifetime durability.

ggg. Automatic tire chains. Specify if an automatic tire chain system is required. (see 3.6.11).

Downloaded from http://www.everyspec.com

6.3 PROCUREMENT REQUIREMENTS.

Unless otherwise specified (see 6.2-ccc) in the invitation for bids, contract, or orders, the following are contractual requirements (see 6.4 through 6.6), except in those instances where it is determined by the purchaser that inclusion thereof would not be to the best interests of the Government or purchaser.

6.4 WARRANTY.

6.4.1 WARRANTY COVERAGE.

The contractor shall warrant the vehicle and furnished equipment against parts failure or malfunction due to design, construction, or installation errors, defective workmanship, and missing or incorrect parts (exceptions, see 6.4.4) for a minimum period of 12 months, and 15 months for vehicles outside the contiguous (48) United States and District of Columbia from date of acceptance*, or 12,000 miles of operation, exclusive of any authorized accumulated driveway mileage, whichever occurs first. However, if the contractor received from any supplier or subcontractor additional warranty on the whole or any component of the vehicle, in the form of time and/or mileage, including any prorata arrangements, or the contractor generally extends to his commercial customers a greater or extended warranty coverage, the Government/purchaser shall receive corresponding warranty benefits.

*The warranty begins when the Government/purchaser accepts the vehicle from the contractor FOB point of origin/destination (see 3.19).

6.4.2 DOMESTIC USE.

When vehicles are used within the 50 States of the United States, the District of Columbia, Puerto Rico, and the Virgin Islands, the warranty shall include the furnishing, without cost to the Government/purchaser (FOB contractor's nearest dealer or branch to vehicle's location or station) new parts and assemblies to replace any that failed or malfunctioned within the warranty period. In addition, when the Government/purchaser elects to have the work performed at the contractor's plant, branch, dealer, or with the contractor's approval, (i) to correct the defect itself or (ii) to have it corrected by a commercial facility, the cost of the labor involved in the replacement of the failed or malfunctioned parts or assemblies shall be borne by the contractor.

6.4.3 FOREIGN USE.

Unless otherwise specified (see 6.2-ddd), when vehicles are used outside the 50 States, the District of Columbia, Puerto Rico, and the Virgin Islands, the warranty shall include the furnishing of new parts or assemblies to replace any returned to the contractor which failed or malfunctioned within the warranty period. The replacement parts or assemblies shall be delivered by the contractor to the port of embarkation in the United States designated by the purchaser. The contractor shall not be required to bear the cost of the labor involved in correcting defects in vehicles operated in foreign countries.

Downloaded from http://www.everyspec.com

6.4.4 WARRANTY EXCLUSIONS.

Unless within the additional coverage under 6.4.1, the following items are considered normal maintenance and repair for which the contractor need not assume liability for reimbursing the Government/purchaser regardless of the vehicle age or mileage:

a. Abuse, negligence, or un-approved alteration of original parts;

b. Damage from accidents;

c. Standard brake and clutch adjustments;

d. General tightening, headlamp adjustments;

e. Wheel alignment or tire balancing;

f. Tires, batteries, medical supplies and equipment, and radio(s) (if warranted by their manufacturers;

g. Miscellaneous expense such as fuel, towing, telephone, travel, lodging, or loss of personal property.

6.4.5 WARRANTY EXTENSION.

In addition to the warranty provisions specified, the following shall also apply:

a. The ambulance chassis, chassis components (power train, etc.) and applicable body and cab shall be warranted and implemented in accordance with the original chassis manufacturer's standard warranty.

b. For vehicle(s) located within a country which has branch, dealer, or approved contractor service facilities, the cost of labor, parts, and materials involved in correcting warranted defects shall be borne by the contractor (see 6.4.3).

c. If action to effect repairs under warranty (except item a, chassis above) is not initiated within seven (7) working days by a dealer or supplier and completed within a reasonable length of time, or if the contractor does not have repair facilities in the city or county in which the vehicle operates, and in the event of emergency or dire need for the vehicle, the Government/purchaser reserves the right to make such repair, and be reimbursed by the contractor as follows:

   If work is performed at a Government/purchaser facility, at the rate of $25.00 per hour for labor based on the manufacturer's flat rate time schedule, and full cost of expenditures for parts and material; or actual labor time and materials, for repairs of nonscheduled operations, or when warranty services are performed at a commercial facility because no contractor facility is available, the new cost of the correction will be billed to the contractor.

6.5 REPAIR PARTS AND SERVICE.

As a continuous operation of the vehicle described by this specification is of utmost importance for the successful bidder to be in a position to render prompt service and to furnish replacement parts. Accordingly, bidders shall indicate the extent of their ability to render prompt service by furnishing a list of branch offices or agencies where complete stocks of repair parts are maintained and can be secured within a reasonable time after

Downloaded from http://www.everyspec.com

ordering by part number from the manufacturer's part book and at such discount as may be quoted from year to year by the manufacturer of the vehicle purchased under this specification.

6.6 STATEMENT OF ORIGIN OR BILL OF SALE.

A manufacturer's Statement of Origin or Bill of Sale showing the applicable purchase order number is required for each vehicle procured under this specification. Unless otherwise specified (see 6.2-eee), such documents shall be forwarded to the consignee.

6.7 OXYGEN TANKS.

Following are the approximate dimensions, weights, and capacities of the various size oxygen cylinders referenced in this specification:

OXYGEN CYLINDERS	D	M	H
Outside diameter (cm/inch)	11/4.5	18/7	23/9
Overall Heights, without valve (cm/inch)	51/20	119/47	142/56
Capacity (gallons)	95	800	1,825
Capacity (liters)	360	3,000	6,900
Capacity, flow @ 10 liters/min. (minutes)	30	325	700
Capacity (cubic feet)	13	106	244
Weight, empty (kg/pounds)	5.9/13	34/75	54/119
Weight, full (kg/pounds)	6.3/14	37.6/83	61.3/135

6.8 REFERENCE HANDBOOK.

The handbook and all the material referenced in this specification (see 3.20) for the model ambulance furnished shall be provided in an 21.6 x 28 cm (8 1/2 x 11 in.), 3-ring, hard cover, loose-leaf binder, inscribed with the complete address and telephone number of the manufacturer and shall contain the following:

1. Table of contents.
2. Copy of supplier's invoice/date of delivery including chassis.
3. Manufacturer's "Star of Life" certification of compliance statement.
4. Ambulance manufacturer's illustrative, pictorial literature and a copy of predelivery inspection/test form signed by inspector.
5. Complete specification KKK-A-1822E and all amendments including purchaser's specifications and modifications, in effect for date of manufacture.

Downloaded from http://www.everyspec.com

6. Conditions of sale and contract (unless otherwise specified).
7. Shipping papers.
8. List of ambulance manufacturer's service points (see 6.5).
9. Copy of chassis manufacturer's warranty and owner manual.
10. Final stage manufacturer's components and equipment information (hardware, fixture, etc.) including supplier's part numbers.
11. Complete wiring diagrams and schematics (3.7.2).
12. Manufacturer's operating and servicing instructions for the entire ambulance, electrical system(s) of the ambulance, components, devices, and equipment aboard, etc., including each equipment manufacturer's data.

All contents of the handbook that cannot be punched with three holes shall be secured in plastic leaves.

6.9 CHANGES AND AMENDMENTS.

When a using agency or purchaser considers that this specification requires revision, a written request for change or additions to the document supported by adequate justification should be sent to the General Services Administration, Automotive Center, Engineering Division (FFAE), Washington, DC 20406, for appropriate action. The agency will be informed of action taken. New and revised information regarding this specification may be issued from time to time under an amendment to the Federal Specification. These amendments are identified by the same number and title as the document and are on green paper. Amendments should be retained until such time as the entire document is revised.

Military Coordination Activity:

Army - AT

Activities:

Air Force - 84-99

Army - AT-EL-CR-ER-MD

Navy - YD-MC

Non-Federal Activities:

Ambulance Manufacturers Division, National Truck Equipment Association

(AMD/NTEA);

American Ambulance Association (AAA)

Custodian & Preparing Activity:

GSA-FSS-FFAE

Civil Agency Activities:

USDA - APHIS

Interior - BIA

State Department - AID

DOT - NHTSA-EMS

DOE

HHS-EMS-IHS

VA-OSS

DC Government

Federal Interagency Committee on Emergency Medical Services (FICEMS)

Downloaded from http://www.everyspec.com

FIGURES

Downloaded from http://www.everyspec.com

FIGURE 1

TYPE I
Conventional, Cab-Chassis With Modular Ambulance Body

For vehicles of 203 cm (80 in.) or more overall width.

Recommended lamp and refelctor location in accordance with the Federal Motor Vehicle Safety Standard No. 108 and Federal Ambulance Specification KKK-A-1822.

NOTE:
Lamps and reflectors may be mounted at other practical locations provided location and visibility requirements of Federal Motor Vehicle Safety Standard No. 108 and Federal Ambulance Specification KKK-A-1822 are met. (Drawings not to scale.)

LEGEND

AMBULANCE TYPE 1
FMVSS NO. 108

1. Headlamp, (2) white (4 white optional)
* 2. Front side marker lamp, (2) amber
3. Front side reflector, (2) amber
4. Front turn signal, (2) amber, (includes vehicular hazard warning signal flahser)
5. Front identification lamps, (3) amber
6. Front clearance lamp, (2) amber
* 7. Rear side marker lamp, (2) red
8. Rear side reflector, (2) red
9. Rear identification lamps, (3) red
10. Rear clearance lamp, (2) red
11. Rear relfector, (2) red
12. Rear, stop, tail, lamp, (2) red

12a. Rear turn signal, (2) amber. Includes vehicular hazard warning signal flasher. (optional location)

13. Rear backup lamp, (1) white
14. Rear license plate lamp, (1) white
15. Front warning light, (2) red

15a. Front warning light, (1) white

16. Rear warning light, (2) red

16a. Rear warning light, (1) amber

17. Side warning light, (2) red per side
18. Grille light, (2) red
19. Intersection lights, (1) red per side
20. Side floodlight, (2) white

20a. Rear floodlight, (1) white

21. Spotlight, (white hand held)

21a. Sportlight, (white, optional location)

*Flashes with front/rear turn signal & vehicular hazard warning signal flasher.

Downloaded from http://www.everyspec.com

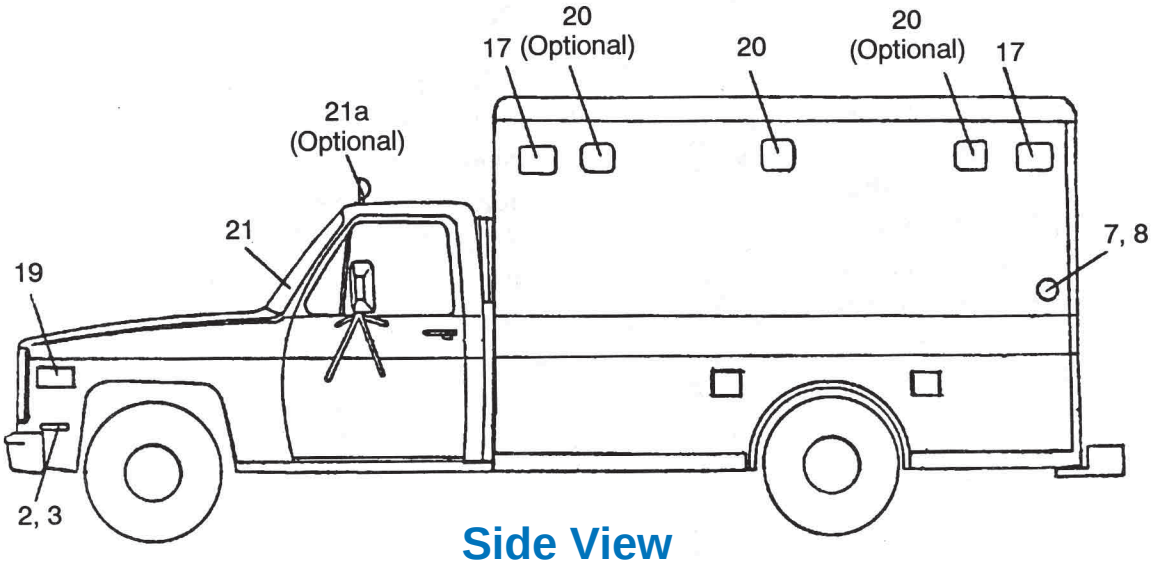

Side View

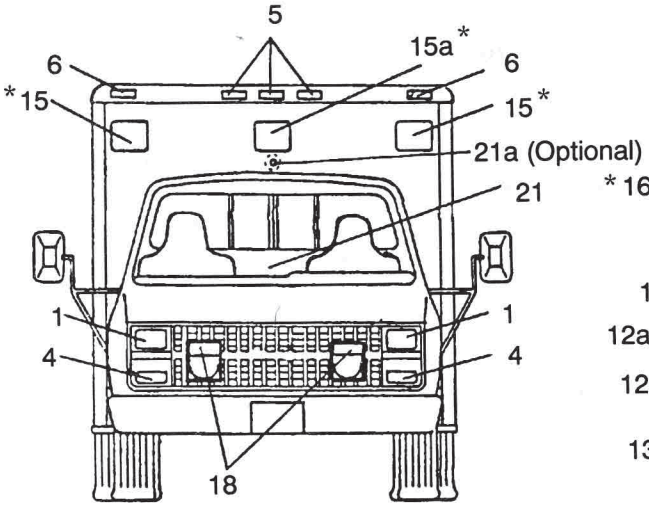

Front View

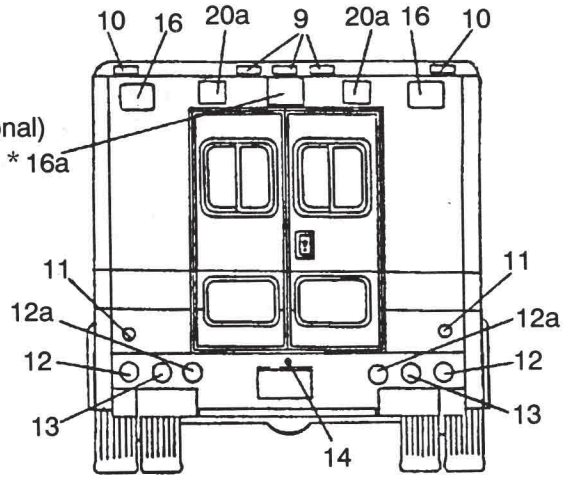

Back View

*** For optional mounting location see 3.8.2.1 and Table 1 (Flash Pattern)**

Downloaded from http://www.everyspec.com

FIGURE 2

TYPE II
Standard Van, Integral Cab-Body Ambulance

For vehicles of 203 cm (80 in.) or more overall width.

Recommended lamp and refelctor location in accordance with the Federal Motor Vehicle Safety Standard No. 108 and Federal Ambulance Specification KKK-A-1822.

NOTE:
Lamps and reflectors may be mounted at other practical locations provided location and visibility requirements of Federal Motor Vehicle Safety Standard No. 108 and Federal Ambulance Specification KKK-A-1822 are met. (Drawings not to scale.)

LEGEND

AMBULANCE TYPE II
FMVSS NO. 108

1. Headlamp, (2) white (4 white optional)
* 2. Front side marker lamp, (2) amber
3. Front side reflector, (2) amber
4. Front turn signal, (2) amber, (includes vehicular hazard warning signal flahser)
5. Rear side marker lamp, (2) red
6. Rear side reflector, (2) red
7. Rear relfector, (2) red
8. Rear stop, tail & turn signal lamp, (2) red, (turn signal section may be amber, includes vehicular hazard warning signal flasher)
9. Rear backup lamp, (1) white
10. Rear license plate lamp, (1) white
11. Front warning light, (2) red

11a. Front warning light, (1) white

12. Rear warning light, (2) red

12a. Rear warning light, (1) amber

13. Side warning light, (2) red per side
14. Grille light, (2) red
15. Intersection lights, (1) red per side
16. Side floodlight, (2) white

16a. Rear floodlight, (1)

17. Spotlight, (white hand held)
18. Spotlight, (white, optional location)

*Flashes with front/rear turn signal & vehicular hazard warning signal flasher.

Downloaded from http://www.everyspec.com

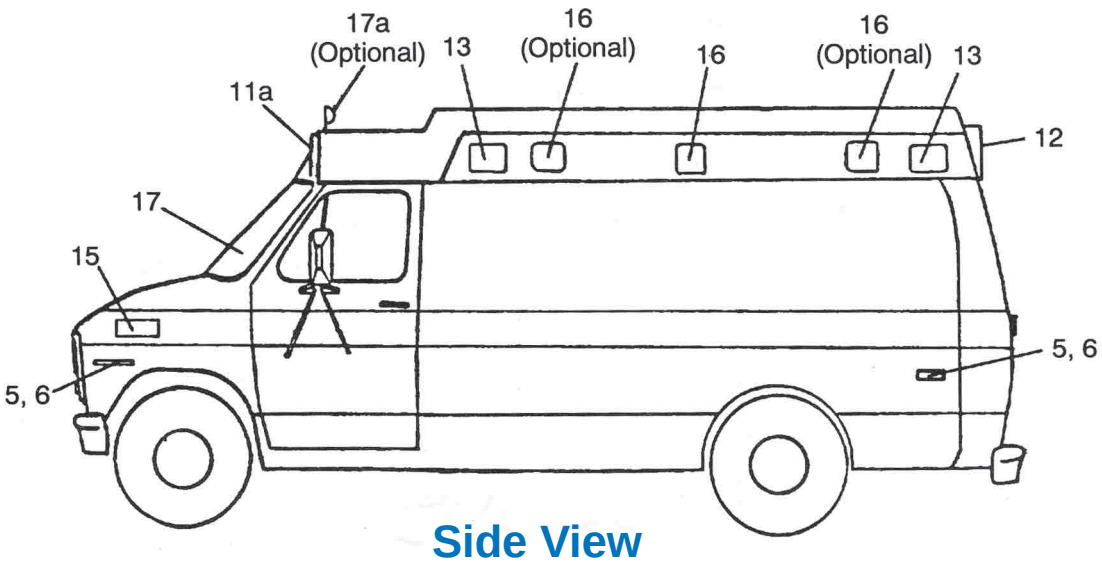

Side View

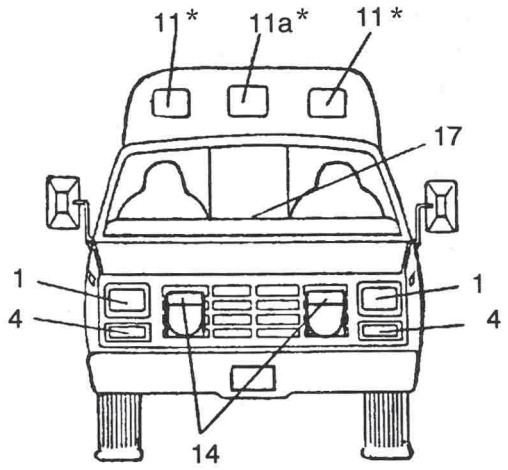

Front View

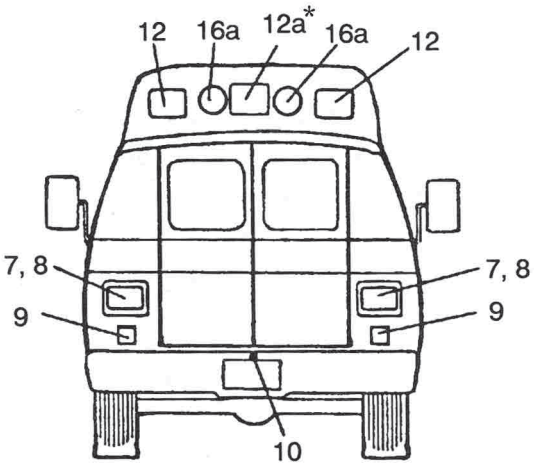

Back View

*** For optional mounting location see 3.8.2.1 and Table 1 (Flash Pattern)**

Downloaded from http://www.everyspec.com

FIGURE 3

For vehicles of 203 cm (80 in.) or more overall width.

Recommended lamp and refelctor location in accordance with the Federal Motor Vehicle Safety Standard No. 108 and Federal Ambulance Specification KKK-A-1822.

NOTE:
Lamps and reflectors may be mounted at other practical locations provided location and visibility requirements of Federal Motor Vehicle Safety Standard No. 108 and Federal Ambulance Specification KKK-A-1822 are met. (Drawings not to scale.)

TYPE III
Cutaway Van, Cab-Chassis with Integrated Modular Ambulance Body

LEGEND

AMBULANCE TYPE III
FMVSS NO. 108

1. Headlamp, (2) white (4 white optional)
* 2. Front side marker lamp, (2) amber
3. Front side reflector, (2) amber
4. Front turn signal, (2) amber, (includes vehicular hazard warning signal flahser)
5. Front identification lamps, (3) amber
6. Front clearance lamp, (2) amber
* 7. Rear side marker lamp, (2) red
8. Rear side reflector, (2) red
9. Rear identification lamps, (3) red
10. Rear clearance lamp, (2) red
11. Rear relfector, (2) red
12. Rear, stop, tail, lamp, (2) red

12a. Rear turn signal, (2) amber. (Includes vehicular hazard warning signal flasher; optional location)

13. Rear backup lamp, (1) white
14. Rear license plate lamp, (1) white
15. Front warning light, (2) red

15a. Front warning light, (1) white

16. Rear warning light, (2) red

16a. Rear warning light, (1) amber

17. Side warning light, (2) red per side
18. Grille light, (2) red
19. Intersection lights, (1) red per side
20. Side floodlight, (2) white

20a. Rear floodlight, (1) white

21. Spotlight, (white, hand held)

21a. Sportlight, (white, optional location)

*Flashes with front/rear turn signal & vehicular hazard warning signal flasher.

Downloaded from http://www.everyspec.com

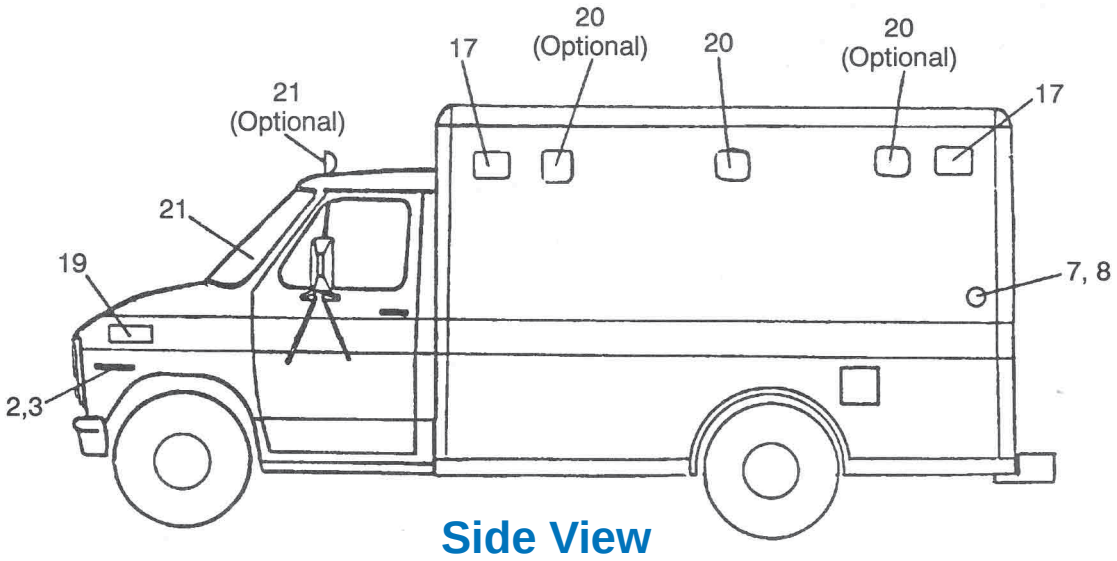

Side View

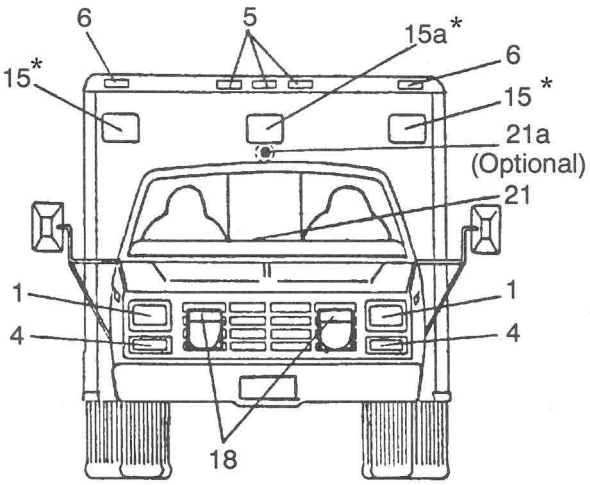

Front View

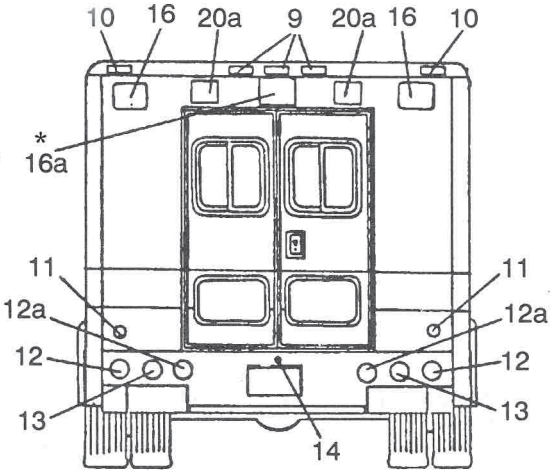

Back View

*** For optional mounting location see 3.8.2.1 and Table 1 (Flash Pattern)**

Downloaded from http://www.everyspec.com

Figure 4

"Star of Life" Symbol®

THE "STAR OF LIFE" IS A SIX-BARRED CROSS UPON WHICH IS SUPER-IMPOSED THE STAFF OF AESCULAPIUS (es'cu-la'pi-us) WHO, IN BOTH GREEK AND ROMAN MYTHOLOGY, WAS THE GOD OF MEDICINE AND HEALING.

NOTE:
THE STAR OF LIFE SYMBOL® IS A REGISTERED TRADEMARK OF THE U.S. DEPARTMENT OF TRANSPORTATION

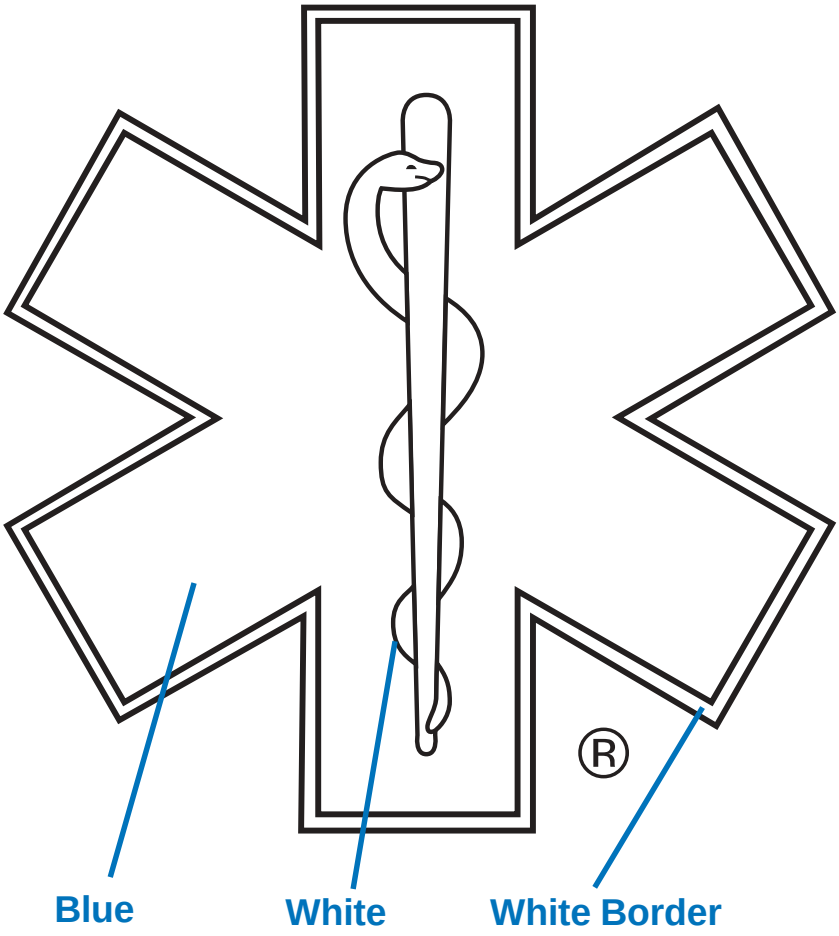

DIMENSIONS

Dimensions (min.):	Size A	Size B	Size C	Size D
Length of Bar	76 mm (3")	30.5 cm (12")	40.6 cm (16")	81.3 cm (32")
Width of Bar	19 mm (.75")	76 mm (3")	10.2 cm (4")	20.3 cm (8")
Length of staff	63 mm (2.5")	24.1 cm (9.5")	31.7 cm (12.5")	63.5 cm (25")
White border	2.4mm (0.09")	9.5mm (0.375")	12.7mm (0.5")	-

All angles 60°

Deviations must be proportionate

Downloaded from http://www.everyspec.com

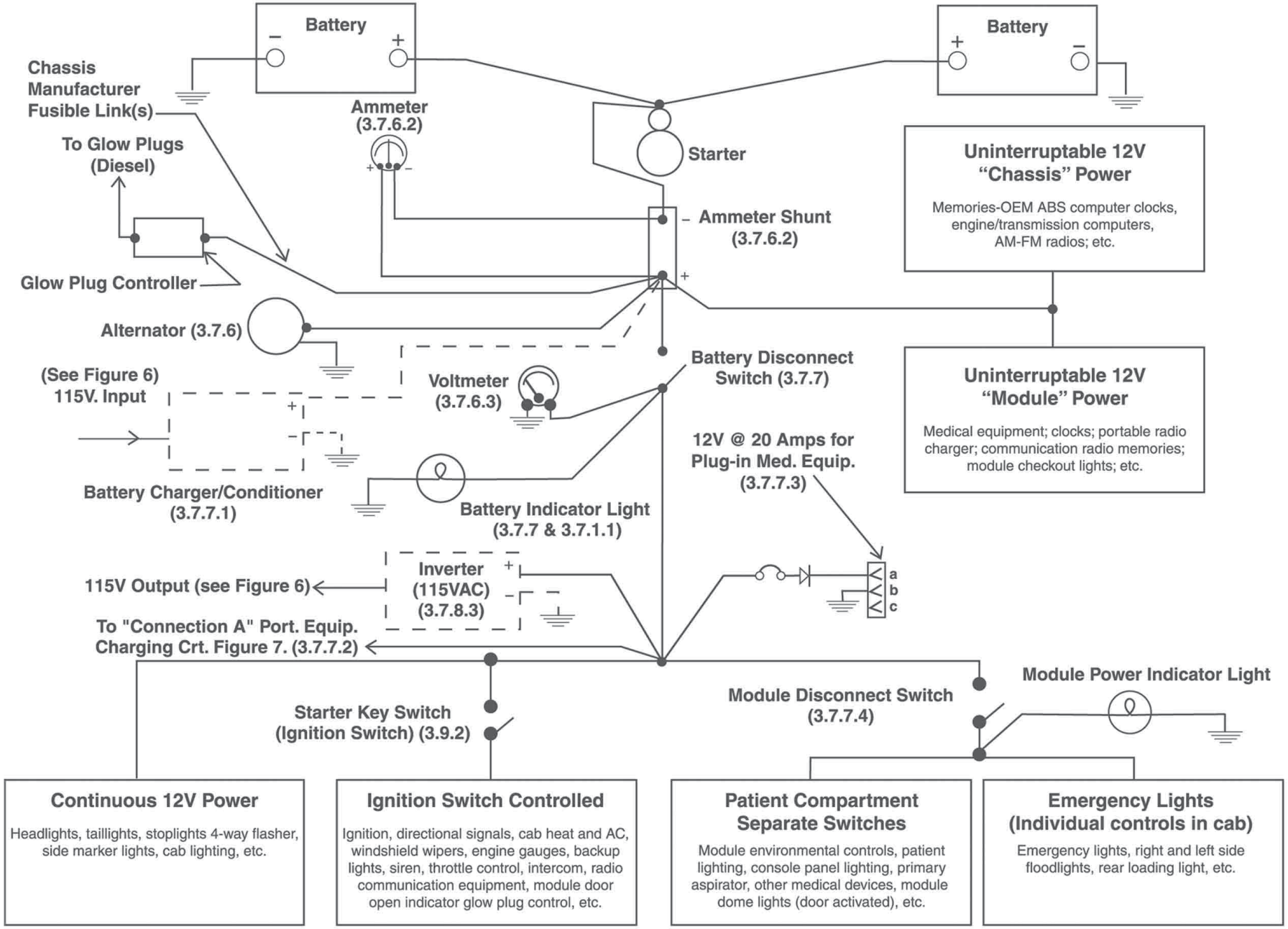

Figure 5A 12 Volt Electrical System - With Battery Disconnect Switch - Functional Diagram

Downloaded from http://www.everyspec.com

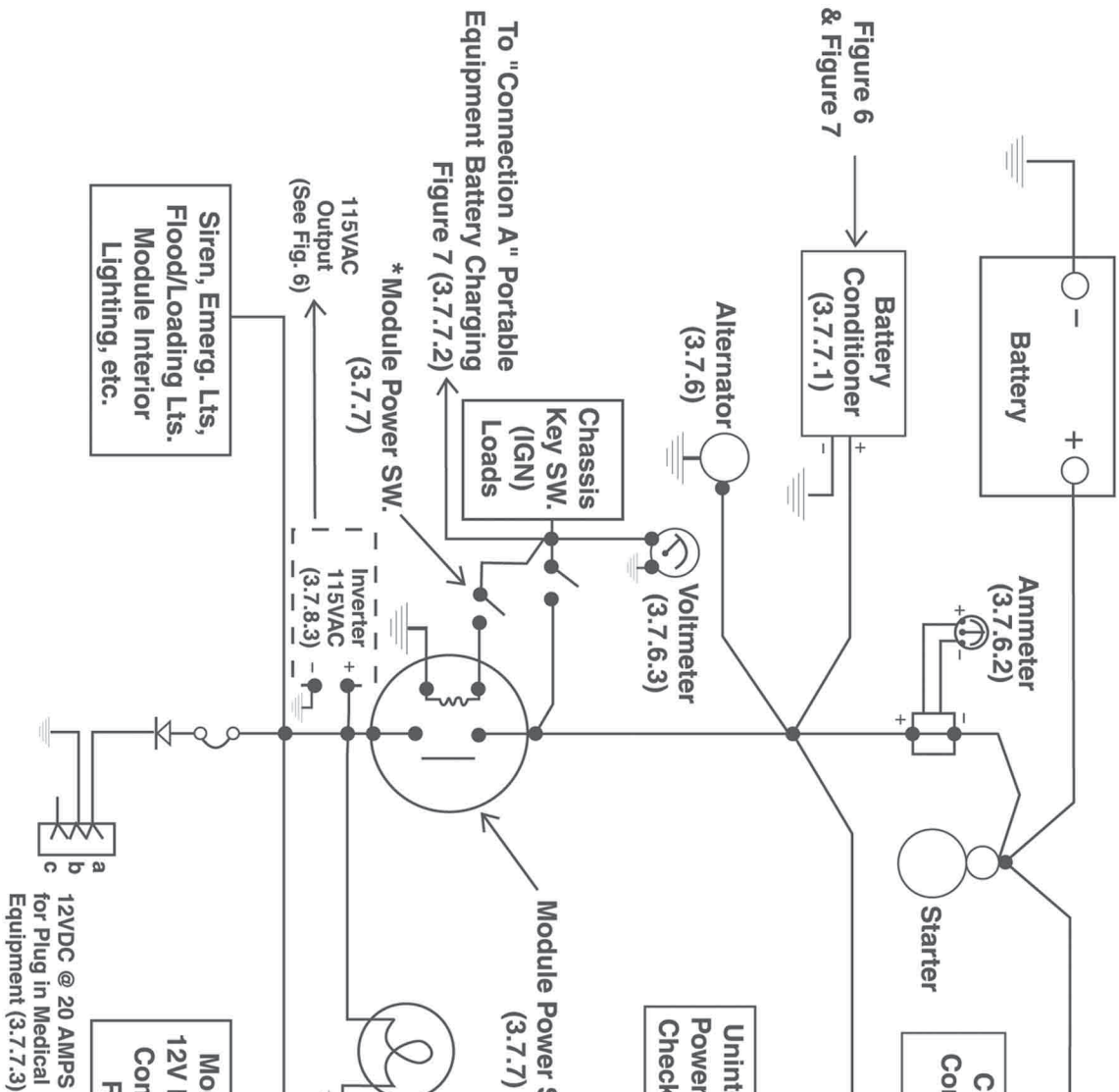

12 Volt Electrical System - Without Battery Disconnect Switch

Figure 5B

Downloaded from http://www.everyspec.com

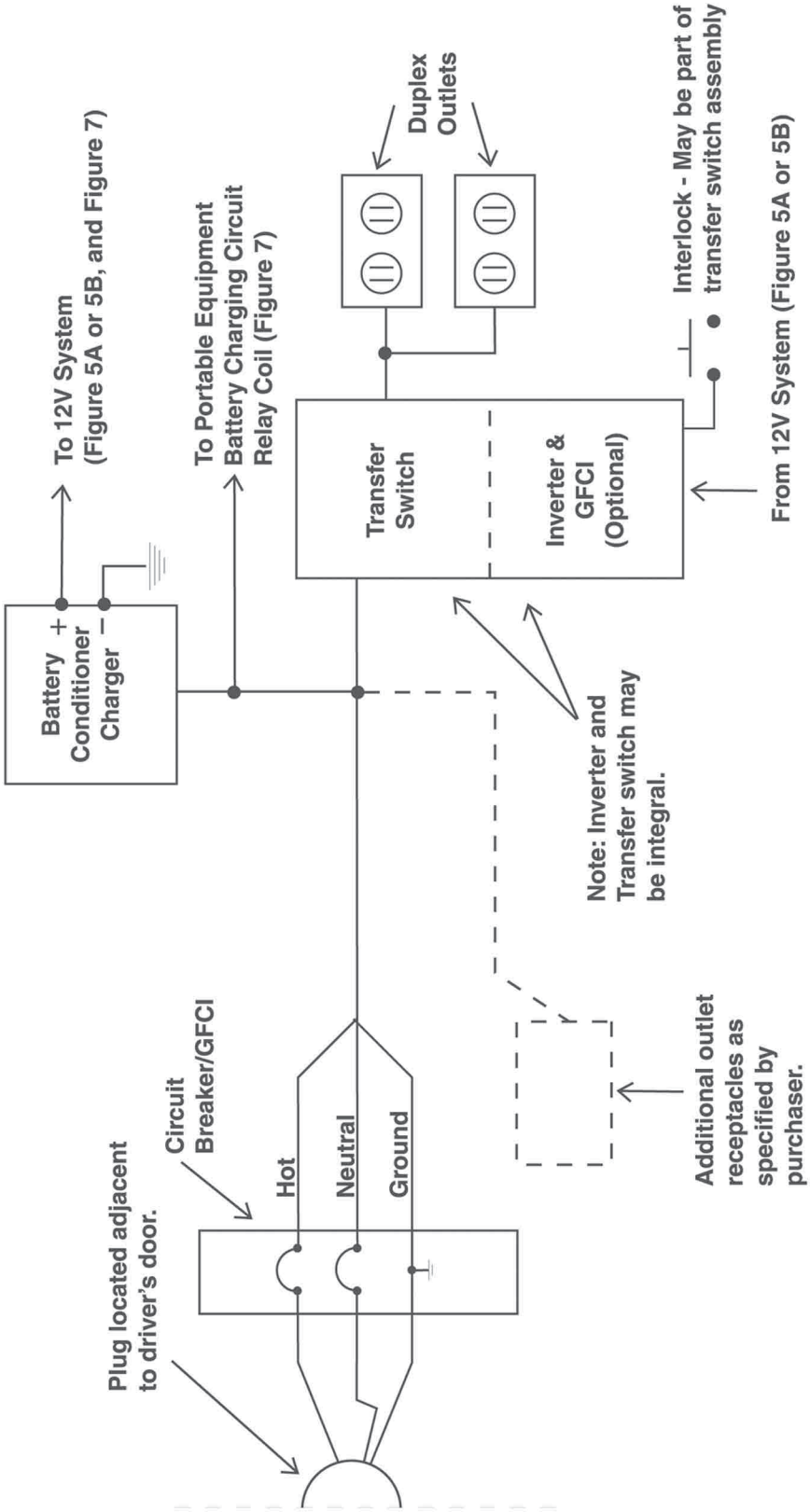

Figure 6 115 Volt AC Electrical System - Functional Diagram

Downloaded from http://www.everyspec.com

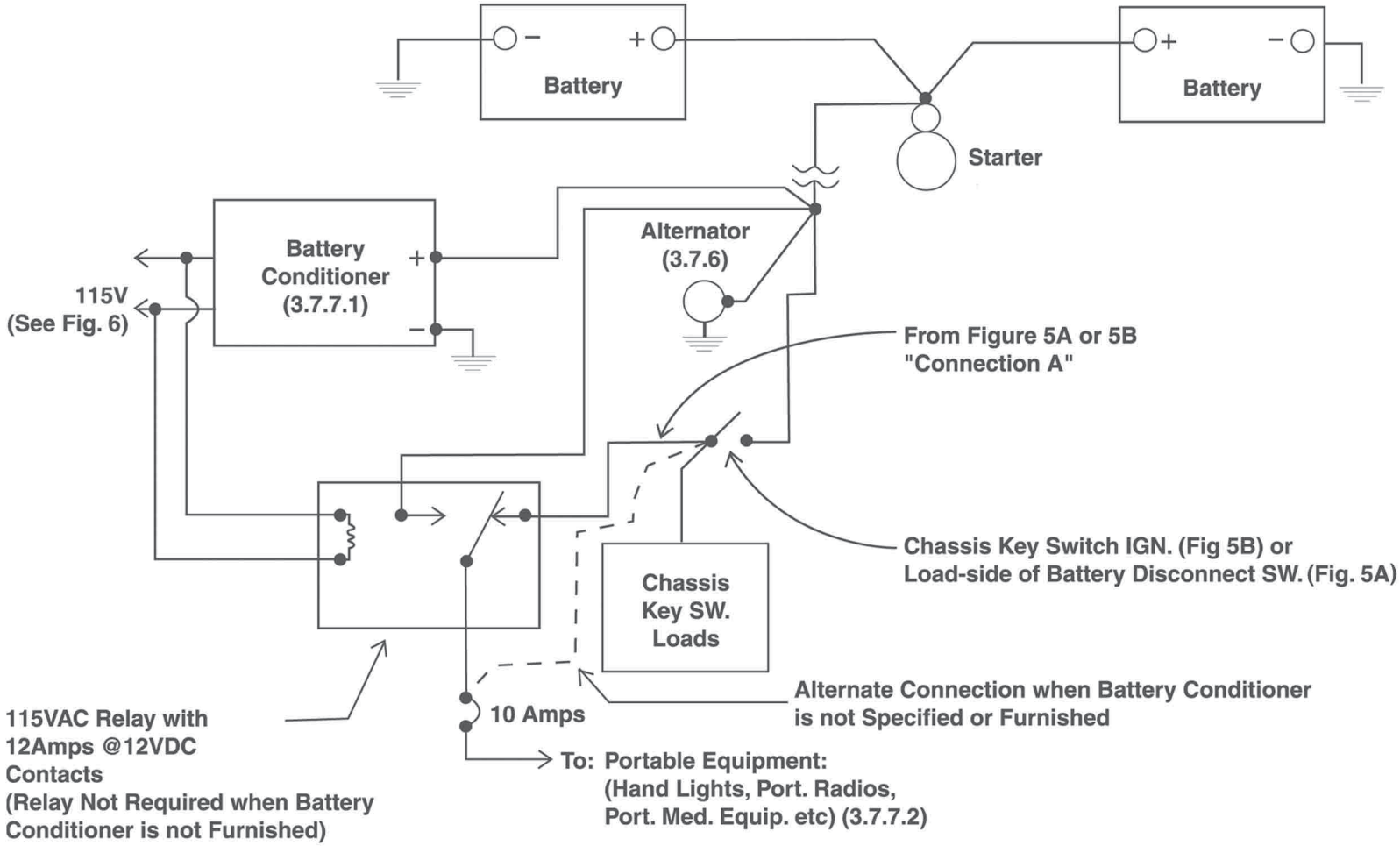

Portable Equipment Battery Charging Circuit

Figure 7

Downloaded from http://www.everyspec.com

ALPHABETICAL INDEX

REFERENCES ARE TO PARAGRAPHS

A

Acceleration. 3.4.7
Additional systems, equipment,
accessories, and supplies 3.15
Air conditioning criteria 3.13.5
Air conditioning-Auxiliary 3.13.5.1
Air filter 3.6.4.2
Air pollution controls 3.6.4.3
AC 115 volt electric utility power 3.7.8
AC 115 volt onboard power device. 3.7.8.3
Alternator 3.7.6
Ambulance, definition 1.1.1
Ambulance, Types I, II, III 1.2
Ammeter……. 3.7.6.2
Angle of approach, ramp breakover, and
departure 3.4.11.5
Antenna cable and mounting
(purchaser furnished radio) 3.14.3
Antifreeze 3.6.4.5.1
Applicable documents 2.1
Artificial ventilation devices (portable) 3.12.2.1
Aspirator, suction systems 3.12.3; 3.12.4
Automatic transmission 3.6.5.2
Automatic transmission, oil cooler(s) 3.6.5.2.1
Axle, ratings, ratios 3.6.5.6

B

Backup alert alarm 3.15.2-d
Battery 3.7.7
Battery, charger/conditioner 3.7.7.1,3.7.7.2
Body, accommodations. 3.10.1
Body, cab provisions. 3.9
Body, patient area, dimensions 3.10.4
Body, general construction 3.10.5
Body mounting 3.10.7
Body protection……..... 3.9.7
Body structure 3.10.6
Body rubrails 3.9.7.5
Brake systems, service and parking. 3.6.5.7
Brakes 3.4.5
Bulkhead/partition for Types II and III. 3.10.15
Bumper, front override guard 3.9.6.1

Downloaded from http://www.everyspec.com

Bumper guards 3.9.6.2
Bumpers and steps 3.9.6

C

Cab body, driver compartment and equipment ... 3.9
Cab body, provisions 3.9.2
Cab connecting bellows, for Type I vehicle 3.9.9
Cab to axle (CA), Types I and III 3.5.6
Ceiling IV hooks 3.11.9
Certifications 1.1.3; 4.3
Certification criteria…… 4.3.4
Certification letter format…… 4.3.5
Certification verification data reports… 4.3.6
Changes and amendments 6.9
Chassis frame 3.6.1
Chassis, power unit, and components 3.6
Checkout lights 3.8.5.2
Classification, Class 1, Class 2 ..... 1.2
Classification of inspection 4.2
Clock, electric 3.15.4 M3
Clutch 3.6.5.4
Color, paint, and finish 3.16.2
Color standards and tolerances 3.16.2.1
Color, warning lights 3.8.1
Combination stretcher chair 3.11.5.1
Communications…… 3.14
Communications equipment 3.14.1
Configuration A 1.2.1; 3.1.5.1
Configuration B …… . 1.2.1; 3.1.5.2
Controls and operating mechanisms 3.9.4
Cooling system 3.6.4.5
Cots 3.11.5
Cot light 3.15.3-8
Cot straps 3.11.8.1
CPR (street side) seat 3.15.3-28
Curb weight 3.5.1

D

Data and caution plates 3.19
Definition of Government, purchaser 6.1.3
Design 3.1.1
Diesel engine 3.6.3.3
Disconnect switch 3.7.7.4
Documents 2.1
Domestic use 6.4.2
Door latches, hinges, and hardware 3.10.9
Doors 3.10.8
Drive hubs, front wheels (4x4 Class 2) 3.6.5.9
Driveline 3.6.5.5
Drive train 3.6.5
Drive train components…… 3.6.5.1
Driver compartment, cab body structure 3.9.1
Driver compartment
environmental equipment 3.13.2
Driver compartment controls 3.7.9
Drug compartment 3.15.3-14

E

Effective intensity (Candela) 3.8.2.2
Electrical 115 VAC receptacles 3.7.8.2
Electrical generating system 3.7.6
Electrical systems and components 3.7
Electromagnetic radiation and suppression .. 3.7.12
Emblems and markings 3.16.4
Emergency lighting, modes 3.8.2
Emergency light photometrics and
physical requirements 3.8.2.2
Emergency lighting system configuration 3.8.2.1
Emergency safety kit 3.15.3-23
Emission control 3.6.4.3
EMT seating 3.10.3
Engine, diesel 3.6.3.3
Engine, gasoline 3.6.3.4
Engine, high-idle speed control 3.7.6.1
Engine hood 3.9.8
Engine, low temperature starting 3.6.3.2
Environmental systems, drivers &
patient compartment 3.13.1-3.13.3
Environmental controls 3.13.7
Examination, destination 4.2.2
Exhaust system 3.6.4.6
Export-vehicle requirements 3.22.2
Exterior lighting 3.8.1
Exterior storage accommodations 3.11.2
Extrication equipment and
stowage accommodations 3.11.2.1

F

Fan, patient 3.15.3-10
Federal specification coverage 6.1.1
Fenders 3.9.7.1
Figures 1-2 (Type I and II) 3.1.2; 3.1.3
Figures 3-4 (Type III and Star of Life) . 3.1.4; 3.16.4
Fire extinguishers 3.15.2,a
First production ambulance 4.2.5
Flood and loading lights (exterior) 3.8.3

Downloaded from http://www.everyspec.com

Floor 3.10.10
Floor coverings and color 3.10.11
Fording 3.4.10
Foreign Use 6.4.3
Four wheel drive 3.1.6
Fuel fill splash plates 3.9.7.6
Fuel range 3.4.9
Fuel system 3.6.4.4

G

Gasoline engine 3.6.3.4
Grab rail 3.15.2.c
Gradeability 3.4.8
Gradeability, low speed minimum 3.4.8.2
Grade at speed 3.4.8.1
Gross vehicle weight rating (GVWR) 3.5.3
Grounding…… 3.7.3
Ground clearance 3.4.11.4

H

Hardware, construction & installation 3.8.2.4
Head cushions 3.10.8.1
Heating criteria 3.13.4
Height, floor 3.4.11.7
Height (patient compartment) 3.10.4
Height (vehicle) 3.4.11.3
High altitude operations 3.6.4.3
Horns 3.7.5; 3.14.7
Hubcaps 3.6.14

I

Ignition system 3.7.3
Illustrations and drawings 3.20
Indicator, lights 3.7.1.1
Infant/child carrier 3.11.8.2
Inspection, classification 4.2
Inspection, destination 4.2.2
Inspection failure of first ambulance 4.2.6
Inspection, purchaser verification 4.1.1
Inspection, operation checks 4.2.4
Insulation 3.10.16
Intended use 6.1
Intercom system 3.14.5
Interior lighting 3.8.5
Interior compartment with
exterior access…… ……3.11.1.2
Interior stowage accommodations 3.11.1
Interior surfaces 3.10.17
Internal 12 Volt D.C. power…… 3.7.7.3
Inverter 115 VAC 3.7.8.3
IV holders and hooks 3.11.9

L

Label, certification 3.19
Length (patient compartment) 3.10.4
Length (vehicle) 3.4.11.1
Lift-points, vehicle 3.22.3.1
Lighting ambulance exterior and interior 3.8
Litter fasteners and anchorages 3.11.7
Loading allowance 3.5.2
Location of equipment and supplies 3.11.1.1

M

Manuals and handbooks of
instructions 3.20; 6.5; 6.8
Markings 3.19
Marking of switches, indicators, etc 3.7.11
Materials, recovered 3.3
Medical, surgical, and biomedical
equipment 3.15.4
Mirrors 3.9.5
Module disconnect switch 3.7.7.4
Mud flaps 3.9.7.3
Mud/stone guards 3.9.7.4

N

Noise and sound level limits, exterior 3.4.3
Noise, patient compartment sound level 3.13.8
Notes (section) 6

O

Oil filter 3.6.4.1
Operation and performance 3.4.1
Operation checks 4.2.4
Optional equipment 3.15.1; 3.15.3
Ordering data 6.2
Outside rearview mirrors 3.9.5
Override front grille guard 3.9.6.1
Overseas vehicle requirements 3.22.1
Oxygen and suction systems and
equipment 3.12
Oxygen, automatic resuscitator 3.12.2.3
Oxygen demand valve 3.12.2.2
Oxygen, main supply and installation. 3.12.1
Oxygen, portable unit. 3.12.2

Downloaded from http://www.everyspec.com

Oxygen powered manually triggered
(resuscitator) valve…….. ..... 3.12.2.2
Oxygen pressure regulator 3.12.1.1
Oxygen, squeeze bag valve mask
system 3.12.2.1
Oxygen system test 3.11.3; 4.4.6
Oxygen tanks 3.11.3; 6.7

P

Partition with access between
compartments (Type II and III) 3.10.15
Patient compartment
environmental equipment 3.13.3
Patient compartment facilitations..... 3.11.1
Patient compartment illumination 3.8.5.1
Patient compartment interior
dimensional parameters 3.10.4
Patient compartment controls..... 3.7.10; 3.7.11
Patient compartment sound level 3.13.8
Patient restraints 3.11.8
Payload allowance 3.5.2
Performance 3.4.4
Performance tests 4.4.2
Photometric requirements, warning lights 3.8.2.2
Power unit components 3.6.4
Power unit, engines 3.6.3
Power unit, engine, heater,
minus (-) 30 F. 3.6.3.2.1
Precautions and observations 6.1.2
Pre-delivery inspection and servicing 3.21
Preparation for delivery 5
Preparation for painting,
color, and markings 3.16
Printed circuits..... 3.7.2.2
Procurement requirements 6.3
Production sample..... 4.2.7
Public address system 3.14.6
Purchaser verification 4.1.1
Purpose of ambulance 1.1.2

Q

Qualifying provisions for Star of Life 4.3
Quality assurance provisions..... 4
Quality conformance inspection 4.2.3

R

Radio, AM/FM 3.15.3-26
Radio equipment 3.14.2; 3.14.4
Radio interference suppression 3.7.12
Ratings (components) 3.5.5
Recovered materials..... 3.3
Reference handbook 6.8
Repair parts and service 6.5
Requirements section..... 3
Responsibility for inspection 4.1
Road test 4.4.4
Rub rails 3.9.7.5
Running boards 3.9.7.2
Rustproofing 3.18

S

Salt spray resistance 3.16.3
Scope and classification 1.1; 1.2
Seats, driver and assistant…… 3.9.3
Seat, EMT 3.10.3
Seat safety belts and anchorages 3.11.6
Servicing and adjusting 3.21
Shock absorbers 3.6.5.12
Siren public address system, speakers 3.14.6
Skid plate 3.6.5.3.1
Source inspection 4.2.1
Spare tire and storage 3.6.10
Special requirements 3.22
Special traction (rear end) differential 3.6.5.8
Speed 3.4.6
Splash shields, fuel fill 3.9.7.6
Spotlights 3.8.4
Spring stops 3.6.5.11
Squad bench, seats, and backrests 3.11.4
Standard mandatory
miscellaneous equipment 3.15.2
Star of Life (emblem) 3.16.4; 4.3
Statement of Origin or Bill of Sale 6.6
Steering 3.6.6
Step, folding style 3.9.6
Stepwell (side door) 3.10.12
Storage compartments…… 3.11
Storage compartments and
cabinets design 3.11.3
Stowage, interior…… 3.11.1
Stowage, rear step 3.15.3-11
Stretchers, cots, and litters 3.10.1; 3.11.5
Suction aspirator 3.12.3
Suction aspirator, portable 3.12.4
Suspension 3.6.5.10

Downloaded from http://www.everyspec.com

Switches, indicators, and
control devices (markings) 3.7.11
Switching arrangements-lights 3.8.2.3

T

Table II, stretchers, cots, and litters 3.10.1
Tachograph 3.15.3-2
Technician seating 3.10.3
Temperature conditions 3.4.2
Test criteria 4.4.1
Test failure of first ambulance 4.4.4.1
Test, oxygen system 4.4.6
Test, performance 4.4.2
Test, road 4.4.4
Tests, warning light system 3.8.2.5
Test, water spray 4.4.5
Tests 4.4
Tiedown points 3.22.3
Tire chains and clearance 3.6.11
Tires 3.6.8
Tools (tire changing) 3.6.13
Towing devices 3.15.3-24
Transfer case, Type II 3.6.5.3
Turning radius 3.4.11.6
Two-way (mobile) radio 3.14.4
Type I 3.1.2
Type II 3.1.3
Type III 3.1.4
Types, Classes, and floor plans 1.2.1

U

Undercoating 3.17
Utility power connector 3.7.8.1

V

Vehicle, ambulance
components, equipment,
and accessories 3.2
Vehicle lubrication 3.6.2
Vehicle operation, performance,
and physical characteristics 3.4
Vehicle physical dimensional requirements 3.4.11
Vehicle weight ratings, and payload 3.5
Ventilation criteria 3.13.6
Voltmeter 3.7.6; 3.7.6.3

W

Walkthru 3.10.15.1
Walkthru deletion 3.10.15.2
Warning indicators 3.7.1.1
Warning lights 3.8.2
Warranty coverage 6.4.1
Warranty exclusions 6.4.4
Warranty extension…….. ..... 6.4.5
Warranty notice 3.19
Waste and sharps disposal……. 3.11.1.3
Water spray test 4.4.5
Weight distribution 3.5.4
Weight distribution tolerance 4.4.3.1
Weights 4.4.3
Wheels 3.6.7
Wheelhousings 3.10.13
Wheel tire balancing 3.6.12
Width (patient compartment) 3.10.4
Width (vehicle) 3.4.11.2
Window; cab/ patient compartment
access 3.10.2
Windows 3.10.14
Window, tinted right side 3.15.3-12
Windshield wipers and washer 3.7.4
Wiring criteria 3.7.2.1
Wiring installation 3.7.2
Workmanship…… 3.23

Downloaded from http://www.everyspec.com