GGG-T-350b
January 28, 1966

SUPERSEDING
Int. Fed. Spec. GGG-T-00350a (GSA-FSS)
May 20, 1965

FEDERAL SPECIFICATION

TIRE LOCK RING TOOL, TIRE REMOVING TOOL, AND TIRE IRON

This specification was approved by the Commissioner, Federal Supply Service, General Services Administration, for the use of all Federal agencies.

1. SCOPE AND CLASSIFICATION

1.1 Scope. This specification covers the requirements for various types of tire tools (see 6.1).

1.1.1 *Federal specification coverage.* Federal specifications do not cover all varieties of the commodity indicated by the title of the specification, or which are commercially available, but include only those generally used by the Federal Government.

1.2 Classification.

1.2.1 *Types.* The tire tools covered by this specification shall be of the following types as specified (see 6.2):

I—Tire lock ring tool.
II—Tire removing tool.
III—Curved spoon tire iron.

Size 1—18-inch (see table I).
Size 2—24-inch (see table I).

IV—Curved bead breaker.
V—Bead loosening drive iron.
VI—Hooked spoon tire iron.

2. APPLICABLE DOCUMENTS

2.1 The following specifications and standards, of the issues in effect on date of invitation for bids, form a part of this specification:

Federal Standards:

Fed. Std. No. 102—Preservation, Packaging, and Packing Levels.
Fed. Std. No. 123—Marking for Domestic Shipment (Civilian Agencies).
Fed. Test Method Std. No. 151—Metals; Test Methods.

(Activities outside the Federal Government may obtain copies of Federal Specifications, Standards, and Handbooks as outlined under General Information in the Index of Federal Specifications and Standards and at the prices indicated in the Index. The Index, which includes cumulative monthly supplements as issued, is for sale on a subscription basis by the Superintendent of Documents, U.S. Government Printing Office, Washington, D.C. 20402.

(Single copies of this specification and other product specifications required by activities outside the Federal Government for bidding purposes are available without charge at the General Services Administration Regional Offices in Boston, New York, Washington, D.C., Atlanta, Chicago, Kansas City, Mo., Dallas, Denver, San Francisco, Los Angeles, and Seattle, Wash.

(Federal Government activities may obtain copies of Federal Specifications, Standards, and Handbooks and the Index of Federal Specifications and Standards from established distribution points in their agencies.)

Military Specification:

MIL-H-15424—Hand Tools, Packaging of.

Military Standards:

MIL-STD-105—Sampling Procedures and Tables for Inspection by Attributes.
MIL-STD-129—Marking for Shipment and Storage.

(Copies of Military Specifications and Standards required by contractors in connection with specific procurement functions should be obtained from the procuring activity or as directed by the contracting officer.)

3. REQUIREMENTS

3.1 Material. Each tool shall be of tool steel or spring steel bar stock, either round, hexagon, or octagon shape. Standard commercial tolerances on bar stock shall apply. The chemical composition, heat treatment and tempering employed shall be such as to produce tire tools conforming to this specification.

3.2 Work ends. Each work end of each tool shall be hot forged and trimmed.

3.3 Hardness. At least the full length of each working end of each tool component shall be hardened to not less than 32 nor more than 50 Rockwell C (see 4.5).

3.4 Load test. Except for type V bead loosening drive iron, each work end of each tool shall withstand a load test of 100 pounds (see 4.6).

3.5 Identification marking. Each tool component shall be stamped or otherwise permanently marked in a plain and permanent manner with the manufacturer's name or trademark of such known character that the source of manufacture may be readily determined.

3.6 Finish. Each tool shall be clean, free from scale, and finished with at least one coat of good quality aluminum paint, black oxide, or an equivalent protective coating.

3.7 Illustrations. Except for dimensional requirements specified, the illustrations herein are descriptive and not restrictive and are not intended to preclude the purchase of tire tools otherwise conforming to the requirements of this specification.

3.8 Type I. The type I tire lock ring tool shall be of one-piece construction, suitable for removing lock rings from truck rims. The tool shall have two work ends with each end trimmed to overall width not exceeding 7/8 inch. The type I tool shall be similar to figure 1 and shall be in accordance with the dimensional requirements.

3.9 Type II. The type II tire removing tool shall be of two-piece construction, suitable for bead breaking and removing tires from automobile rims. The two-piece construction shall consist of one lever with two work ends (see 3.9.1) and one lever with one work end (see 3.9.2).

3.9.1 *Lever with two work ends.* The lever with two work ends shall have a claw-type hook on one end and the opposite end shall be flattened and tapered to a thin end. The claw-type hook shall have two tapered prongs. A gap of 7/8 (plus 1/32, minus 0) inch wide by at least one inch deep shall be provided between the two prongs, for insertion of the work end of the other lever. The back surface of the claw shall be radiused to approximately 1-3/8 inches. The back radiused surface of the claw shall be provided with at least seven teeth, to serve as a fulcrum for the other lever. Each tooth shall be at least 7/8 inch long and at least 1/16 inch high. The flanks of the teeth shall be impressed into the back surface of the claw so that the remaining material, at the ends of the teeth, will serve as a guide for the other lever.

3.9.2 *Lever with one work end.* The lever with one work end, shall have one end that is not formed, to serve as a handle, and the other end shall be flattened and tapered to a thin end. The flattened end shall have at least eleven serrations which will mate with the teeth on the claw end of the other lever. Each serration shall extend across the full width of the flattened portion of the lever and shall be at least 1/32 inch in depth.

3.9.3 *Complete tool.* The type II tool shall be similar to figure 2 and shall be in accordance with the dimensional requirements.

3.10 Type III. The type III tire iron shall have a curved spoon shape work end, and the opposite end shall have either a plain or formed end at the option of the manufacturer. The curved spoon shall be either flat, "dished-out" or I-beam shaped in cross section at the option of the manufacturer. The type III tool shall be similar to figure 3 and shall be in accordance with the dimensional requirements.

3.10.1 *Sizes.* The type III tool shall be of the size specified (see table I and 6.1).

TABLE I. *Type III curved spoon tire iron*

Size number	Overall length A
	Inches
1	18 ± 3/4
2	24 ± 1

3.11 Type IV. The type IV curved bead breaker tire iron shall have a hooked shaped work end with a heel on the back of the hook and the opposite end shall have a handle end that is reduced in diameter from the body diameter of the bar stock. The type IV tool shall be similar to figure 4 and shall be in accordance with the dimensional requirements.

3.12 Type V. The type V bead loosening drive iron shall have a work end that is radiused and smooth to the extent that it will not damage the tire when driving the bead loose from the rim. The driving (striking) end of the tool shall be radiused or chamfered to prevent early mushrooming or spalling. The type V tool shall be similar to figure 5 and shall be in accordance with the dimensional requirements.

3.13 Type VI. The type VI hooked spoon tire iron shall have two work ends. One work end shall have a spoon that tapers in thickness on a curved configuration and the end of the spoon shall terminate in a short hook. The other work end shall have a spoon that tapers in thickness on a multiple bend configuration. The type VI tools shall be similar to figure 6 and shall be in accordance with the dimensional requirements.

3.14 Workmanship. Workmanship shall be first class in every respect. Burrs, sharp edges, flash, and other injurious or extraneous material shall be removed.

4. QUALITY ASSURANCE PROVISIONS

4.1 Responsibility for inspection. Unless otherwise specified in the contract or purchase order, the supplier is responsible for the performance of all inspection requirements as specified herein. Except as otherwise specified, the supplier may utilize his own facilities or any commercial laboratory acceptable to the Government. The Government reserves the right to perform any of the inspections set forth in the specification where such inspections are deemed necessary to assure that supplies and services conform to prescribed requirements.

4.1.1 *Inspection of materials and components.* In accordance with 4.1, the supplier is responsible for insuring that materials and components used were manufactured, tested, and inspected in accordance with the requirements of referenced subsidiary specifications and standards to the extent specified herein, or, if none, in accordance with this specification.

4.2 Sampling procedures. Sampling procedures shall be in accordance with MIL-STD-105. Data for sampling shall be as stated in table II.

TABLE II. *Sampling data*

Category	Sample unit	Inspection level	Acceptable quality level	AQL expressed in terms of	Reference
Visual examination	1	II	4.0	Defects per 100 units	4.3.1
Dimensional examination	1	S-4	1.5	Defects per 100 units	4.3.2
Testing	1	S-3	1.0	Percent defective	4.5 4.6
Preparation for delivery	One container	S-2	4.0	Defects per 100 units	4.7

4.3 Examination.

4.3.1 *Visual examination.* Each sample unit shall be examined for any nonconformance in design, material, finish, coating, construction, workmanship, and marking. Defects are listed in table III.

TABLE III. *Defects list*

Design	Not as specified (see 1.2.1)
Material	Not as specified (see 3.1)
Finish	Not as specified (see 3.6)
Coating	Not as specified (see 3.6)
Construction	Not as specified (see applicable type)
Workmanship	Not as specified (see 3.14)
Marking	Not as specified (see 3.5)

4.3.2 *Dimensional examination.* Each sample unit shall be examined for any nonconformance with dimensional requirements.

4.4 Testing. Each sample unit shall be tested in accordance with 4.5 and each sample, except type V, shall be tested in accordance with 4.6.

4.5 Hardness test. Hardness tests shall be conducted in accordance with method 243.1 of Fed. Test Method Std. No. 151 to determine compliance with 3.3.

4.6 Load test. Each tool (except type V) component shall be tested by supporting the work end of the tool within 1/2 inch of the end of the tool and applying a test load of 100 pounds within 4 inches of the other end of the tool in a manner to simulate its actual use. If the tool breaks, cracks, or becomes deformed, it shall be considered as defective.

4.7 Inspection of preparation for delivery requirements. An inspection shall be made to determine that the preservation, packaging, packing, and marking comply with the requirements in section 5. Defects shall be scored in accordance with table IV. Sample unit shall be one shipping container fully prepared for delivery. The lot size shall be the number of shipping containers in the end item inspection lot.

TABLE IV. *Classification of preparation for delivery defects*

Examine	Defects
Markings (exterior)	Omitted; incorrect; illegible; improper size, location, sequence, or method of application.
Materials	Any component missing or damaged.
Workmanship	Inadequate application of components such as incomplete closure of container flaps, loose strapping, inadequate stapling. Distortion of container.

5. PREPARATION FOR DELIVERY

(*For civil agency procurement the definitions and application of levels of packaging and packing shall be in accordance with Fed. Std. No. 102.*)

5.1 Preservation, packaging, and packing. Unless otherwise specified (see 6.2), the tire tools shall be preserved, packaged, and packed in accordance with MIL-H-15424. The level of preservation and packaging shall be A or C and the level of packing A, B, or C as specified (see 6.2).

5.1.1 As part of the requirements of section 5, the following is considered as part of table I of MIL-H-15424:

Column 1	Column 2	Column 3	Column 6	Column 7
Tire, tool lock ring removing	P-1	I	12	12
	P-1	I	18	18
Curved spoon iron 18-inch length	P-1	I	18	18
24-inch length	P-1	I	6	6
Curved bead breaker	P-1	I	6	6
Bead loosening drive iron	P-1	I	6	6
Hooked spoon iron	P-1	I	6	6

5.2 Marking.

5.2.1 *Military agencies.* In addition to any special marking required by the contract or order, or herein, interior and exterior shipping containers shall be marked in accordance with MIL-STD-129.

5.2.2 *Civil agencies.* In addition to any special marking specified in the contract or order, each unit and intermediate package and shipping container shall be marked in accordance with Fed. Std. No. 123.

6. NOTES

6.1 Intended use. The type I tool is a one-piece tool used for removing lock rings from truck rims. The type II tool is a two-piece tool used for bead breaking and removing tires from automobile rims. The type III tools are single metal bars having blade-like end(s) of various shapes to insert between the rim and bead of a pneumatic tire to remove and replace the tire. The type IV curved bead breaker is a metal bar having a hooked end for breaking the bead loose from the rim. The type V bead loosening drive iron is used for loosening the bead from the rim by striking the tool with a hammer. The type VI hooked spoon tire irons are single metal bars usually used in pairs for removing and replacing tubeless tires from rims.

6.2 Ordering data. Purchasers should exercise any desired options offered herein, and procurement documents should specify the following:

(*a*) Title, number, and date of this specification.
(*b*) Type and size, when applicable, of tire tool required (see 1.2.1).
(*c*) Level of packaging and packing required (see 5.1).
(*d*) Additional marking, if required (see 5.2).

6.3 Transportation descriptions. Transportation descriptions and minimum weights applicable to this commodity are:

Types I, II, and IV

Rail:

Tools, not otherwise indexed by name.
Carload minimum weight 30,000 pounds.

Motor:

Tools, hand, other than power.
Truckload minimum weight 30,000 pounds, subject to Rule 115, National Motor Freight Classification.

Types III, V, and VI

Rail:

Tire changing irons.
Carload minimum weight 36,000 pounds.

Motor:

Tire changing irons.
Truckload minimum weight 36,000 pounds, subject to Rule 115, National Motor Freight Classification.

DOD coordination has been waived.

Preparing activity: GSA-FSS

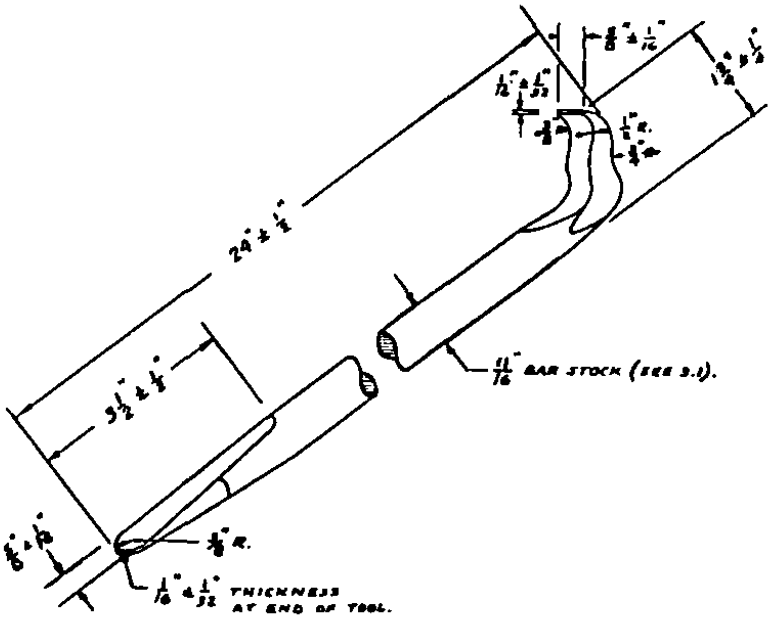

FIGURE 1. Type I tire lock ring

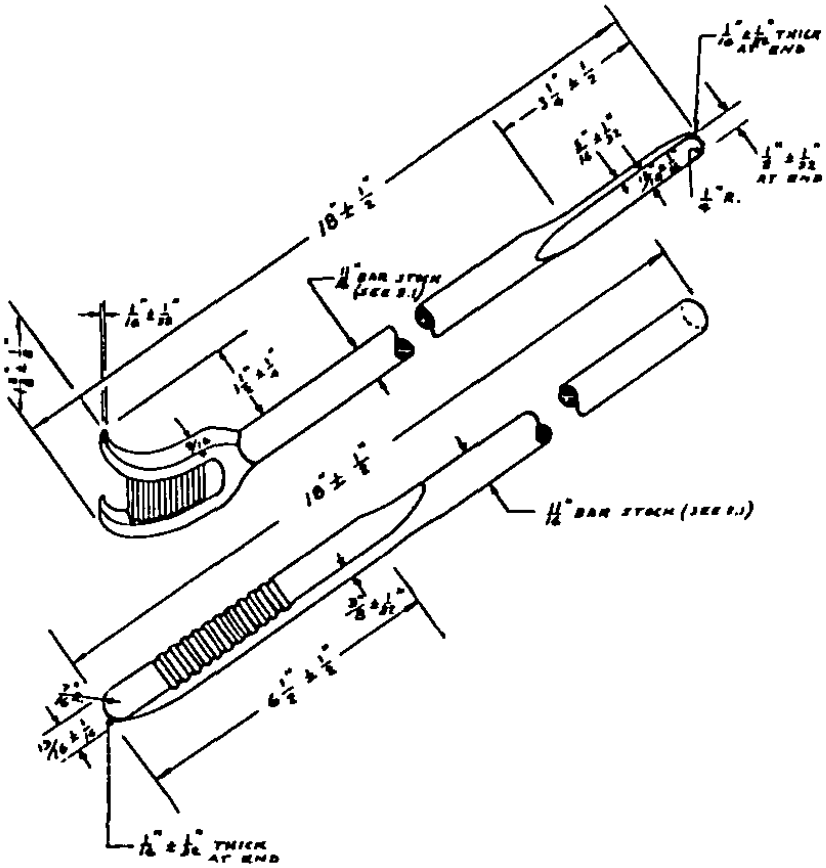

FIGURE 2. Type II tire removing tool

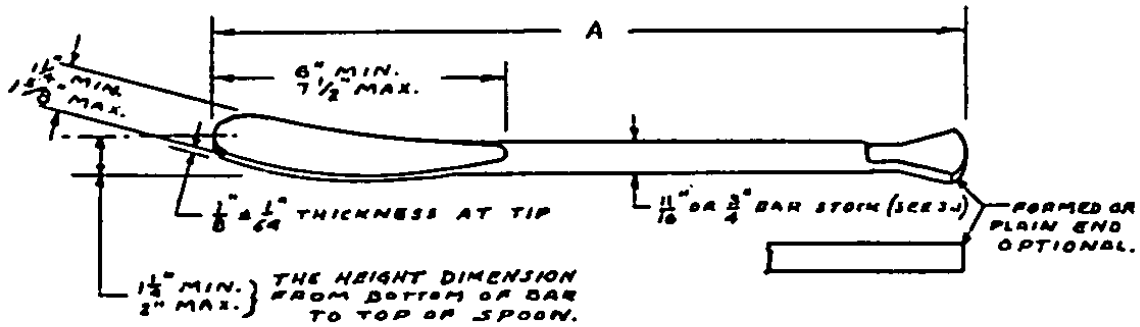

FIGURE 3. Type III curved spoon tire iron

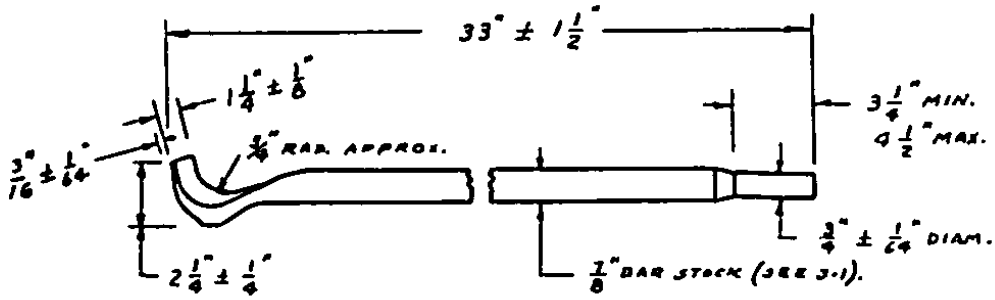

FIGURE 4. Type IV curved bead breaker tire iron

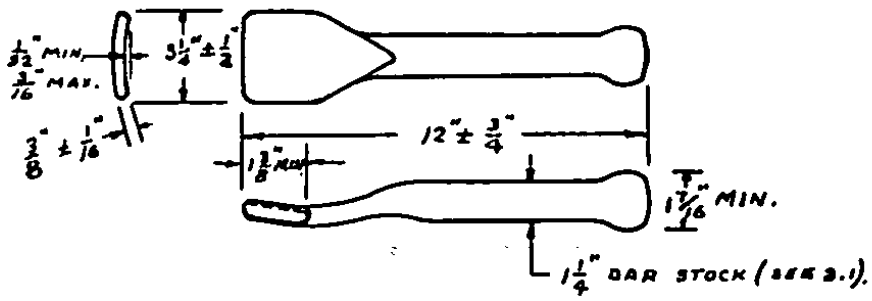

FIGURE 5. Type V bead loosening drive iron

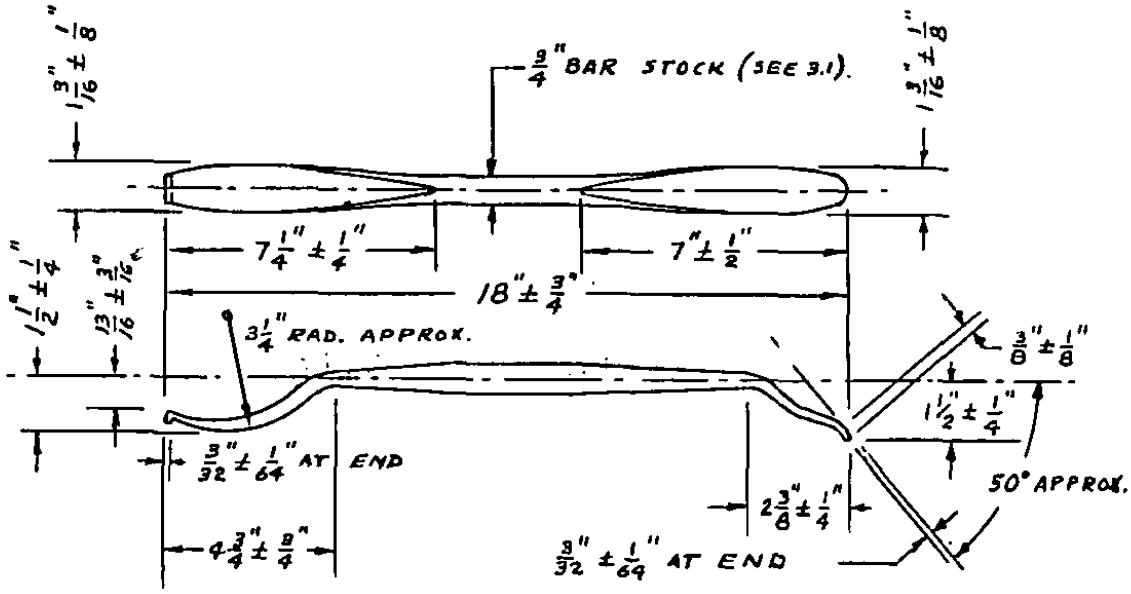

FIGURE 6. Type VI hooked spoon tire iron

Orders for this publication are to be placed with General Services Administration, acting as an agent for the Superintendent of Documents. See section 2 of this specification to obtain extra copies and other documents referenced herein. Price 5 cents each.