GG-T-321D
July 11, 1977
SUPERSEDING
Fed. Spec. GG-T-321C
September 28, 1962

FEDERAL SPECIFICATION

THERMOMETERS, SELF-INDICATING, LIQUID-IN-GLASS FOR MACHINERY AND PIPING SYSTEMS

This specification was approved by the Commissioner, Federal Supply Service, General Services Administration, for the use of all Federal agencies.

1. SCOPE AND CLASSIFICATION

1.1 Scope. This specification covers self-indicating, liquid-in-glass thermometers for those applications and temperature ranges specified, the other applications within the limits of range and accuracy specified herein.

1.2 Classification. Thermometers shall be of the following types, classes, ranges, styles, and forms, as specified (see 6.2).

1.2.1 Types, classes, and ranges. Types, classes, and ranges shall be as follows:

Type I - Mercury.

Class 1 - Bare bulb (union), Range a - -40° to 110°F.
Class 2 - Bare bulb (flanged), Range g - 200° to 950° or 1,000°F.
Class 3 - Well (threaded and seal-welded or seal-brazed).

Range a - -40° to 110°F.
Range b - 20° to 180°F.
Range c - 30° to 240°F.
Range d - 50° to 400°F.
Range e - 50° to 550°F.
Range f - 50° to 750°F.
Range g - 200° to 950° or 1,000°F.

1.2.2 Stem styles. Styles shall be as follows:

Style 1 - Standard stem - 3-5/8.
Style 2 - Short extension stem - 5-1/4.
Style 3 - Extension neck - 5-1/4.
Style 4 - Extension stem, extension neck - 8-1/8.
Style 5 - Long extension stem - 8-1/8.
Style 6 - Commercial standard stem - 3-1/2.
Style 7 - Commercial short extension neck - 3-1/2.
Style 8 - Commercial short extension stem - 6.
Style 9 - Commercial extension neck - 6.
Style 10 - Commercial extension stem, extension neck - 9.
Style 11 - Commercial long extension stem - 9.

1.2.3 Forms (see figure 1). Forms shall be as follows:

Form A - Straight stem.
Form B - 90° back angle stem.
Form C - 90° right side angle.
Form D - 90° left side angle.
Form E - 45° reclined angle.
Form F - Adjustable angle.

2. APPLICABLE DOCUMENTS

2.1 The following documents, of the issues in effect on date of invitation for bids or request for proposal, form a part of this specification to the extent specified herein.

Federal Specification:

PPP-B-636 - Boxes, Shipping, Fiberboard.

Federal Standard:

Fed. Std. No. 123 - Marking for Shipment (Civil Agencies).

(Activities outside the Federal Government may obtain copies of Federal Specifications, Standards, and Handbooks as outlined under General Information in the Index of Federal Specifications and Standards and at the prices indicated in the Index. The Index, which includes cumulative monthly supplements as issued, is for sale on a subscription basis by the Superintendent of Documents, U.S. Government Printing Office, Washington, DC 20402.

(Single copies of this specification and other Federal Specifications required by activities outside the Federal Government for bidding purposes are available without charge from Business Service Centers at the General Services Administration Regional Offices in Boston, New York, Philadelphia, Washington, DC, Atlanta, Chicago, Kansas City, MO, Fort Worth, Houston, Denver, San Francisco, Los Angeles, and Seattle, WA.

(Federal Government activities may obtain copies of Federal Specifications, Standards, and Handbooks and the Index of Federal Specifications and Standards from established distribution points in their agencies.)

Military Specifications:

MIL-I-45208A - Inspection System Requirements.
MIL-P-116 - Preservation, Methods of.

Military Standards:

MIL-STD-105 - Sampling Procedures and Tables for Inspection by Attributes.
MIL-STD-129 - Marking for Shipment and Storage.
MIL-STD-167 - Mechanical Vibrations of Shipboard Equipment.
MIL-STD-278 - Welding and Allied Processes for Machinery for Ships of the United States Navy.

(Copies of Military Specifications and Standards required by contractors in connection with specific procurement functions should be obtained from the procuring activity or as directed by the contracting officer.)

2.2 Other publications. The following documents form a part of this specification to the extent specified herein. Unless a specific issue is identified, the issue in effect on date of invitation for bids or request for proposal shall apply.

American National Standards Institute (ANSI) Standard:

B 16.5 - Steel Pipe Flanges and Flanged Fittings.

(Application for copies should be addressed to the American National Standards Institute, 1430 Broadway, New York, NY 10018.)

American Society for Testing and Materials (ASTM) Standard:

A 108 - Cold Finished Carbon Steel Bars and Shafting.

(Application for copies should be addressed to the American Society for Testing and Materials, 1916 Race Street, Philadelphia, PA 19103.)

National Bureau of Standards (NBS) Handbook:

H 28 - Screw-Thread Standards for Federal Services.

(Application for copies should be addressed to the Superintendent of Documents, Government Printing Office, Washington, DC 20402.)

National Motor Freight Traffic Association, Inc., Agent:

National Motor Freight Classification.

(Application for copies should be addressed to the American Trucking Associations, Inc., Traffic Department, 1616 P Street, N.W., Washington, DC 20036.)

Uniform Classification Committee, Agent:

Uniform Freight Classification.

(Application for copies should be addressed to the Uniform Classification Committee, Room 1106, 222 South Riverside Plaza, Chicago, IL 60606.)

3. REQUIREMENTS

3.1 Material. Material covering the construction of the thermometers under this specification shall be essentially commercial materials except as otherwise specified herein.

3.1.1 Indicating liquid. The indicating liquid shall be mercury. The mercury shall appear to be red except for thermometers graduated above 750°F. The column shall be continuous and unbroken under all conditions.

3.1.1.1 Mercury. The mercury shall be triple distilled, having a foreign residue of not more than 0.003 percent, and shall be pure and dry.

3.1.2 Wells or bare bulbs. Material for the parts exposed to the fluid, the temperature of which is being measured, shall be in accordance with table I. All wells shall be of one-piece design. Commercial brass or 304 stainless steel is acceptable for non-shipboard use.

TABLE I. Materials

Range and Service	Operating temperature, maximum °F	Pressure, maximum, p.s.i.	Well or Bulb Material
Range a Chilled liquid refrigerants	60	200	Bronze or Brass
Range a Refrigerated or cold storage	60	Atmospheric	Corrosion-resisting steel (316) or Commercial Brass or Aluminum
Range b Fresh water	180	200	Bronze or Brass
Range b Sea water and brine	180	1,000	Nickel-Copper alloy (Monel)
Range c Oil and hot water	240	2,000	Corrosion-resisting steel (316)
Range d Gases	400	5,000	Nickel-copper alloy (Monel)
Range e Hot water	550	800	Corrosion-resisting steel (316)
Range f Saturated steam	650	600	Carbon steel
Range g Superheated steam	850	1,300	Corrosion-resisting steel (316)

3.1.3 Glass tube and bulb. Glass tube and bulb for thermometers graduated up to and including 750°F shall be made of Corning Normal 7560, or equal. Glass tube and bulb for thermometers graduated above 750°F shall be made of Jena Supermax 2954 glass, or equal.

3.1.3.1 Bulb chamber for class 3 bulb. Bulb chambers shall be made of corrosion resisting metal. The heat transfer medium shall be noncorrosive. For non-shipboard use, commercial brass or copper plated steel is acceptable for temperature ranges to 400°F; corrosion resisting steel or copper plate steel is acceptable for temperature ranges above 400°F.

3.1.4 Case and frame. Cases and frames shall be made of brass, malleable iron, steel, or aluminum alloy. If not polished brass, the case and frame shall be enameled gray. One coat of zinc-chromate primer, alkyd type, shall be applied. For non-shipboard use, manufacturer's standard finish is acceptable.

3.1.4.1 Window. The case shall be provided at the front with a clear window, free from cracks, blisters, or defects of any kind. For scale ranges 400°F and below, the window shall be heat resistant clear plastic, at least 0.0625 inches thick. For scale ranges above 400°F, a clear glass window at least 0.090 inches thick or 0.062 safety glass shall be provided.

3.1.5 Flanges (class 3). The flanges shall be in accordance with figure 2 (for corrosion-resisting steel) and figure 3 (for inconel).

3.1.6 Elbows. Elbows, when furnished as a separate part, shall be of commercial brass or corrosion-resisting steel, as applicable.

3.1.7 Union nut connections. The union connections shall be bronze or brass for temperatures up to and including 400°F, and corrosion resisting steel for temperatures above 400°F.

3.1.8 Threaded fasteners. The material of all threaded fasteners shall be brass or corrosion-resisting steel.

3.2 Design, general.

3.2.1 Type I, mercury. The tube and bulb shall contain pure, dry mercury. The air shall be entirely removed and the tube filled with an inert dry gas, such as nitrogen or carbon dioxide. The pressure in the tube shall be sufficient to insure a continuous and unbroken mercury column in all thermometers to remain so upon violent shaking of the thermometer with head downward or when quickly rotated.

3.2.2 Case and frame. The case and frame shall be designed to assure maximum readability. The window shall be securely fitted into the case or into a frame securely attached to the case so that the thermometer will withstand the tests specified herein.

3.2.3 Glass tube and bulb. The thermometer shall be provided with a glass tube and bulb that has been adequately annealed. The tube shall be a magnifying lens tubing with a white enamel strip at the back. The width shall be not less than 1/4 inch. The magnified column shall have a reading angle of not less than 10° in a plane at right angles to the axis of the glass tube. An expansion chamber shall be provided at the top of the tube to prevent breakage when exposed to temperature exceeding the scale range by not less than 50°F. The expansion chamber is not mandatory in thermometer ranges exceeding 750°F. The glass tube shall be centrally located with respect to the scale, and means shall be provided to prevent axial displacement of the tube.

3.2.3.1 Bulb chamber. The bulbs for well-type thermometers shall be protected and sealed by a metal bulb to prevent breakage. The glass bulb shall extend to not less than 1/8 inch from the bottom of the bulb chamber.

3.3 Scales. The nominal length of the scales shall be 5, 7, and 9 inches as specified (see 6.2), and shall have dimensions in accordance with table II. The scales shall be of sufficient thickness to prevent warping. Each scale shall be so slotted as to permit adjustment equivalent to two scale divisions. All the lines and figures shall be engraved or etched with black on silvered scales. Metal scales with white synthetic enamel baked on at a temperature of not less than 250°F with black figures and lines will be acceptable in lieu of silvered scales for thermometers. The scales shall be held firmly by screws and the screw ends shall be level with the case.

TABLE II. Scale dimensions (inches)

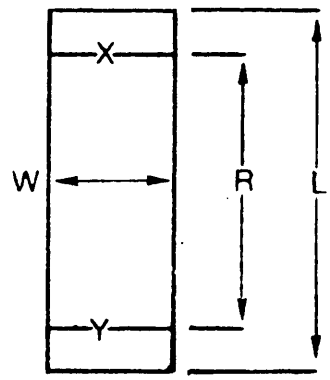

L (Nominal)	R (Minimum)	W (Minimum)	X to Y (Scale range)
5	3-1/2	1	(see table III)
7	5	1-1/4	
9	6-1/2	1-3/4	

3.3.1 Graduations. Scale graduations shall be in accordance with table III.

TABLE III. Range and graduations

Range symbol	Smallest division	Numeral interval
a, b, c	2	10
d, e, f	5	25
g	10	50

3.3.1.1 Marking. The scale, as specified (see 3.3), shall be accurately and correctly graduated up to and including the last subdivision of the scale. The scale markings shall not be extended to temperatures beyond which the thermometer is suited. The identity of graduation, the units (°F), a legend "MERCURY", and the manufacturer's name, and trademark, shall be legibly marked thereon. For shipboard use only, a serial or traceable code number shall be marked on the thermometer.

3.4 Detail design.

3.4.1 Class 1, bare bulb (union). The bulbs for class 1 thermometers shall not exceed 9 inches in length (see figure 3).

3.4.2 Class 2, bare bulb (flanged). The bulb shall be a flanged bare bulb in accordance with figures 2 and 3, as applicable. All welds in the bulb shall be smooth. The sensitive portion of the bulb shall not exceed 3 inches. The diameter of the insertion length shall not exceed 3/4 inch.

3.4.3 Class 3, well (threaded and seal-welded). All class 3 thermometers shall be furnished without wells, unless otherwise specified (see 6.2). The wells shall provide for male union, threaded 3/4-28 NS-2 for 5-inch scale thermometers and 1-1/4-18 NEF-2 for 7- and 9-inch scale thermometers. Wells for 5-inch scale thermometers shall be shown on figure 4, as specified (see 6.2). Wells for 7- and 9-inch scale length thermometers shall be as shown of such shape, design, and dimensions as to provide for the installation of the bulbs required under wells specified herein. Heat transfer from well to the bulb may be accomplished by use of a heat transfer medium. The heat transfer medium shall not be corrosive to the bulb chamber.

3.4.4 Threads. All threads shall be in accordance with National Bureau of Standards Handbook H28.

3.4.5 Styles. Styles shall be as specified (see figures 5 through 15). The immersion length shall be at least 1 inch greater than the sensitive portion. (For definition of immersion length, see figure 16.)

3.4.6 Class 3 bulbs. Each bulb of well thermometers shall be of such dimension as to fit closely in its well. The sensing bulb dimensions shall be in accordance with applicable figure and shall be provided with a male union nut for fastening securely in the well.

3.4.7 Flanged dimensions. The flanges shall be in accordance with ANSI B 16.5 flanges, and shall be used in 600 pounds per square inch (p.s.i.) and 1,500 p.s.i. systems, as specified (see 6.2).

3.4.8 Welding. Welding shall be in accordance with MIL-STD-278. Where bulbs, sleeves, and flanges are welded together, the material shall be compatible from a welding standpoint (see figure 2).

3.5 Performance. The thermometers or wells as applicable shall be designed to meet the performance requirements specified in 3.5.1 through 3.5.6.

3.5.1 Operating conditions. Thermometers shall be suitable for operation when the bulb assembly is directly in contact in services of pressure and temperature ratings specified in 3.1.2.

3.5.2 Accuracy. Each thermometer shall indicate the correct temperature to within 1 percent of the range span.

3.5.3 Lag (see 4.4.3).

3.5.3.1 Classes 1 and 2, bare bulb design (union and flanged). The time lag for bare bulb thermometers shall not exceed 8 seconds when the mercury bulb is in directly contract with the temperature medium.

3.5.3.2 Class 3, well design (threaded and seal-welded). The time lag for well thermometers shall not exceed 45 seconds. Graphite or other heat transfer means may be used to insure acceptable conductance of heat between the well and the bulb.

3.5.4 Over temperature. The accuracy shall be within the limit specified in 3.5.2.

3.5.5 Vibration. The accuracy of the thermometers, after the vibration test specified in 4.4.5, shall be as specified in 3.5.2.

3.5.6 Leakage. Thermometer well shall show no evidence of leakage when tested in accordance with 4.4.2.

4. QUALITY ASSURANCE PROVISIONS

4.1 Responsibility for inspection. Unless otherwise specified in the contract or purchase order, the contractor is responsible for the performance of all inspection requirements as specified herein. Except as otherwise specified in the contract or order, the contractor may use his own or any other facilities suitable for the performance of the inspection requirements specified herein, unless disapproved by the Government. The Government reserves the right to perform any of the inspections set forth in the specification where such inspections are deemed necessary to assure that supplies and services conform to prescribed requirements.

4.1.1 Quality control. The contractor shall provide and maintain a quality control system acceptable to the Government for the thermometers covered by this specification. The quality control system shall be in accordance with MIL-I-45208A.

4.2 Sampling for acceptance inspection.

4.2.1 Lot (thermometers). All thermometers of the same type, class, range, style, and form offered for delivery at one time under the same contract or order shall be considered a lot.

4.2.2 Lot (wells). All wells of the same composition offered for delivery at one time under the same contract or order shall be considered a lot.

4.2.3 Sampling for examination and interchangeability. Sample thermometers and wells shall be selected from each lot in accordance with MIL-STD-105, special level S-3. Examination and interchangeability shall be as specified in 4.3.

4.2.4 Sampling for lot acceptance tests. A random sample of thermometers and wells shall be selected from each lot in accordance with 4.2.3, and shall be subjected to the tests specified in 4.4.1 through 4.4.5 to determine conformance to the requirements of this specification.

4.3 Examination and interchangeability.

4.3.1 Examination. Each of the sample thermometers and wells selected in accordance with 4.2.3 shall be examined to determine conformance to all requirements of this specification, not involving tests. Any thermometer or well in the sample containing one or more visual or dimensional defects shall be rejected. The applicable AQL shall be 6.5 percent defective. Failure to meet the applicable AQL shall be cause for rejection.

4.3.2 Interchangeability. Samples selected in accordance with 4.2.3 shall be checked for interchangeability for the bulb, and the well for proper engagement of the bulb within the well. The sample thermometers and wells shall be assembled and disassembled for determination of interchangeability.

4.4 Test procedures.

4.4.1 Calibration. The entire insertion length shall be immersed in a suitable fluid. A calibration curve consisting of at least five equally spaced points shall be obtained over the operating range of the instrument to determine the extent of the reproducibility of the indication. The bath temperature shall be leveled out in such a manner as to eliminate lag between the thermometer and the standard. For purposes of meeting the accuracy requirement of 3.5.2, the thermometer shall be considered satisfactory if the calibration curves indicate that adjustment of the scale will bring all the data within 1 percent of the range span.

4.4.2 Bulb well test. The thermometer well shall be subjected to a strength and porosity test of 1-1/2 times the working pressure specified in table I, externally. In addition, when applicable in bare bulb designs, welded joints in the bulb shall be leak tested to assure soundness.

4.4.3 Lag. The time required for the thermometer to indicate 63.2 percent of the response to the step change between T_3 - T_4 specified in table IV shall be as specified in 3.5.3. Dip tests shall be made at that stirring speed and location in the bath at which the standard test cylinder shown on figure 17 has a lag of 25 seconds plus or minus 0.4 seconds based on an average of four trials. The bulb of the thermometer shall be immersed in bath T_1 as shown in table IV and allowed to soak until the indicator registers the bath temperature. The thermometer shall be moved from the bath and allowed to cool in air, or in a second bath, until the reading has dropped to T_2 as shown in table IV. The bulb shall then be quickly immersed in the bath which has been maintained at T_1. Timing shall start when the temperature reads T_3 on the instrument and stopped when the temperature reads T_4. Elapsed time between T_3 and T_4 readings is the lag time. The lag test shall include the well as applicable.

TABLE IV. Test temperatures, °F

Range symbol	Scale range, °F	Bath liquid 1/	Range °F span	T_1 ± 5°F	T_2 max. value	T_3	T_4
a	-40 to 110	water	150	95	35	50	78
b	20 to 180	water	160	164	50	100	140
c	30 to 240	water	210	200	75	100	163
d	50 to 400	water	350	200	50	100	163
e	50 to 550	water	500	200	50	100	163
f	50 to 750	salt	700	680	425	450	595
g	200 to 950 or 1,000	salt	750 or 800	940	460	580	808

1/ Salt bath shall be noncorrosive to the metals used in the instrument bulbs tested, usually lavite.

4.4.4 Over temperature. The insertion length shall be subjected to a temperature equal to and the maximum scale indication and held for 15 minutes. The bulb shall then be allowed to cool to ambient temperature in air. There shall be no evidence of mercury separation or mercury residue above the indicating column. The instrument shall then be tested for accuracy in accordance with 4.4.1.

4.4.5 Vibration test. The thermometer shall be mounted with its socket screwed into a vibrating device and subjected for 7 hours to combined vibrations of 1/8 inch total linear movement perpendicular to the face of the instrument, and 2-1/2 degrees total angular oscillation parallel to the plane of the face of the instrument without evidence of failure. The center of the oscillatory rotation shall be 3 inches from the thermometer centerline and at the approximate level of the socket threads. The frequency of both vibrations shall be 1,000 cycles per minute. During the vibration test, the tube shall not turn in the case, and no parts shall become loose or damaged. After this test, the thermometer shall indicate correctly within one percent of the range. For non-shipboard use, the vibration test is not required.

4.4.6 Any thermometer which is damaged during tests shall be repaired, if possible; otherwise, it shall be replaced with a new thermometer.

4.4.7 Inspection of preparation for delivery. An inspection shall be made to determine whether the packaging, packing, and marking comply with the requirements of section 5 of this specification. Defects shall be scored in accordance with table V. For inspection of interior packaging, the sample unit shall be one shipping container fully prepared for delivery, selected at random just prior to the closing operations. Sampling shall be in accordance with MIL-STD-105. Defects of closure listed shall be examined on shipping containers fully prepared for delivery. The lot size shall be the number of shipping containers in the end item inspection lot. The inspection level shall be S-2 with an AQL of 4.0 percent defective.

TABLE V. Classification of preparation for delivery defects

Examine	Defects
Markings	Omitted; incorrect; illegible; improper size, location, sequence, or method of application.
Material	Any component missing or damaged.
Workmanship	Inadequate application of components such as incomplete closure of container flaps, loose strapping, inadequate stapling, or distortion of container.
Contents	Quantity per container is more or less than required. Gross weight exceeds the requirements of the box specification.

5. PREPARATION FOR DELIVERY

5.1 Preservation and packaging. Preservation and packaging shall be level A or commercial, as specified (see 6.2).

5.1.1 Level A. Thermometers and wells, or both, shall be preserved and packaged in accordance with method III of MIL-P-116. Threaded ares shall be protected by snug-fitting fiberboard sleeves, tubing caps, or similar media. When specified (see 6.2), the unit package shall be water resistant.

5.1.2 Commercial. Thermometers and wells, or both, shall be preserved and packaged in accordance with the supplier's commercial practice.

5.2 Packing. Packing shall be level A, B, or C as specified (see 6.2).

5.2.1 Level A. Thermometers and wells, or both, packaged as specified in 5.1, shall be packed in close-fitting boxes conforming to PPP-B-636, class weather resistant. Boxes shall be closed, waterproof sealed, and strapped in accordance with the appendix to PPP-B-636.

5.2.2 Commercial. Thermometers and wells, or both, packaged as specified in 5.1, shall be packed in containers which will insure acceptance by common carrier and safe delivery at destination. Shipping containers shall comply to the Uniform Freight Classification rules or the National Motor Freight Classification rules.

5.3 Marking. Marking shall be in accordance with 5.3.1 or 5.3.2, as specified (see 6.2).

5.3.1 Military agencies. Marking shall be in accordance with MIL-STD-129.

5.3.2 Civil agencies. Marking shall be in accordance with Fed. Std. No. 123.

6. NOTES

6.1 Intended use.

6.1.1 The selection of the bulb, with respect to its application, shall be as shown in table VI.

TABLE VI. Selection of bulb

Range symbol	Bulb design and material	Figure	Application
a	Bare, union connected, corrosion-resisting metal	3	Refrigerated or cold storage room
a	Threaded well, bronze	4 or 6 thru 9	Chilled liquid refrigerants
b	Threaded well, bronze or nickel-copper	4 or 6 thru 9	Sea water, brine and fresh water
c	Threaded well, bronze or nickel-copper	4 or 6 thru 9	Oil and hot water
d	Threaded well, bronze or nickel-copper	4 or 6 thru 9	Gases
e	Threaded well, corrosion-resisting steel	4 or 6 thru 9	Hot water
f	Threaded and seal-welded well, carbon steel	5	Saturated steam
g	Bare, flanged 1/ Corrosion-resisting steel	2	Superheated steam

1/ Flanged bare bulb to be used where high speed response is mandatory.

6.1.2 Selection of wells. Extension neck wells are intended for applications where the pressure vessel is insulated.

6.1.3 The selection of the scale size, with respect to its application, shall be as shown in table VII.

TABLE VII. Selection of scale size

Scale size, inches	Maximum operating temperature, °F	Service	Bulb design
5	400	Oil, water, gas	Type I, class 3
7	600	Saturated steam, oil, water, gas	Type I, class 3
9	850	Superheated steam	Type I, class 2 or 3
7 to 9	60	Cold storage and refrigeration	Type I, class 1, cold storage; and class 3, refrigeration

6.2 Ordering data. Purchasers should select the preferred options permitted herein, and include the following information in procurement documents:

(a) Title, number, and date of this specification.
(b) Type, class, range, style, and form required (see 1.2).
(c) Length of scale (see 3.3).
(d) When wells are required, the application figure and the material should be specified (see table I and 3.4.3).
(e) Whether 600 p.s.i. or 1,500 p.s.i. should be ordered for flanged assemblies (see 3.4.7).
(f) Selection of applicable levels of preservation, packaging, and packing (see 5.1 and 5.2).
(g) When package should be water resistant (see 5.1.1).
(h) Whether civil or military marking is required (see 5.3).
(i) Whether for shipboard use.

MILITARY CUSTODIANS:

Army - O
Navy - SH
Air Force - ASD

PREPARING ACTIVITY: GSA - FSS

Orders for this publication are to be placed with General Services Administration, acting as an agent for the Superintendent of Documents. See Section 2 of this specification to obtain extra copies and other documents referenced herein. Price 65 cents each.

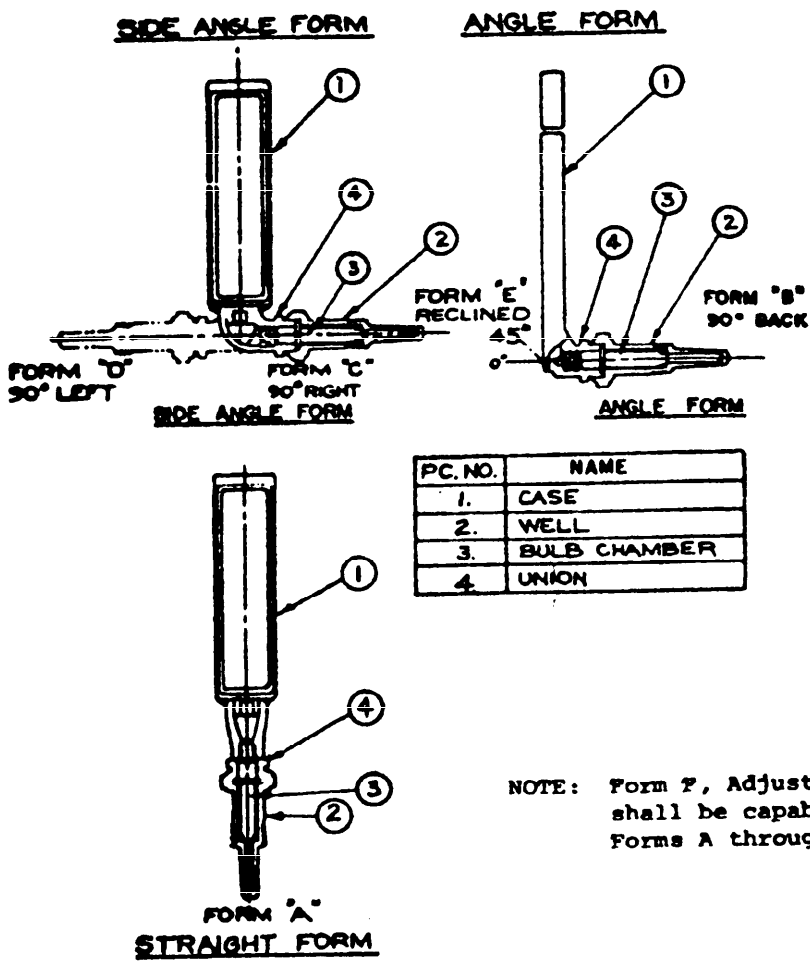

PC. NO.	NAME
1.	CASE
2.	WELL
3.	BULB CHAMBER
4.	UNION

NOTE: Form F, Adjustable Angle, shall be capable of assuming Forms A through E inclusive.

FIGURE 1—Forms of thermometers and separable wells (forms A through F))

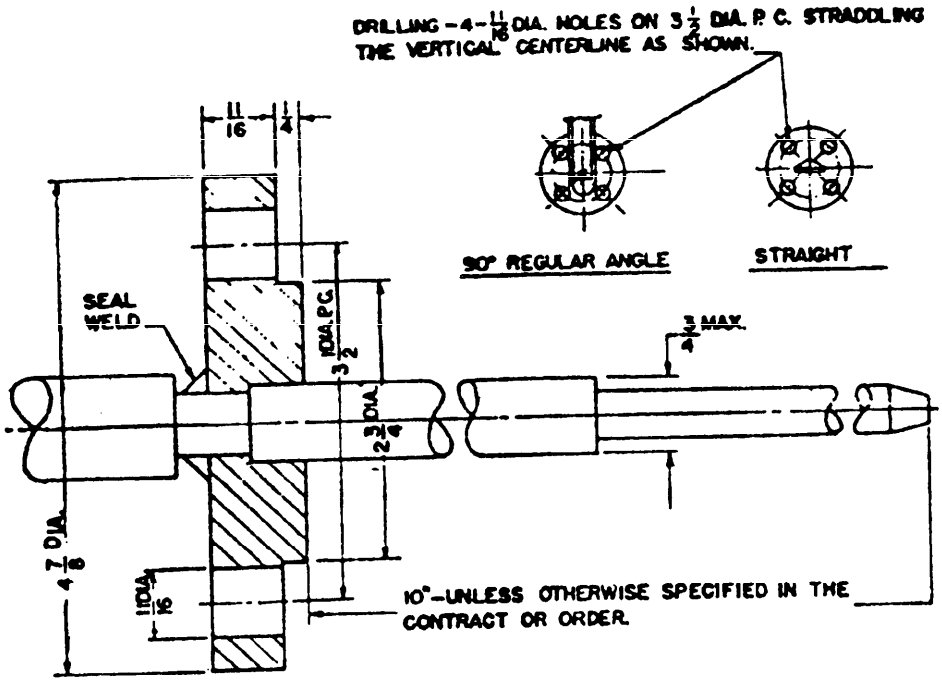

FIGURE 2—Class 2, range 9, 9 inch scale thermometers for superheated steam

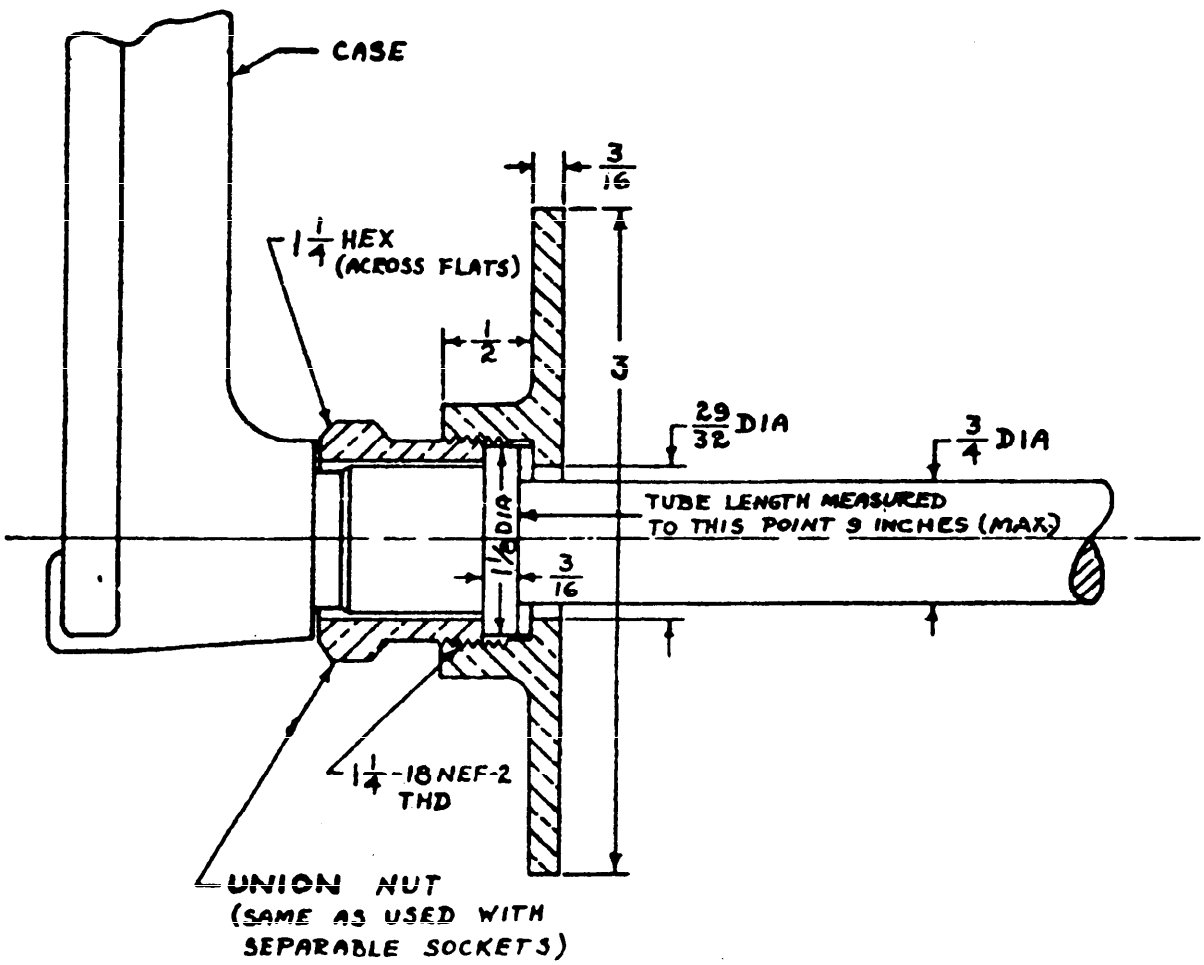

FIGURE 3 —Class 1, range a, 7 and 9 inch scale thermometers for cold storage room

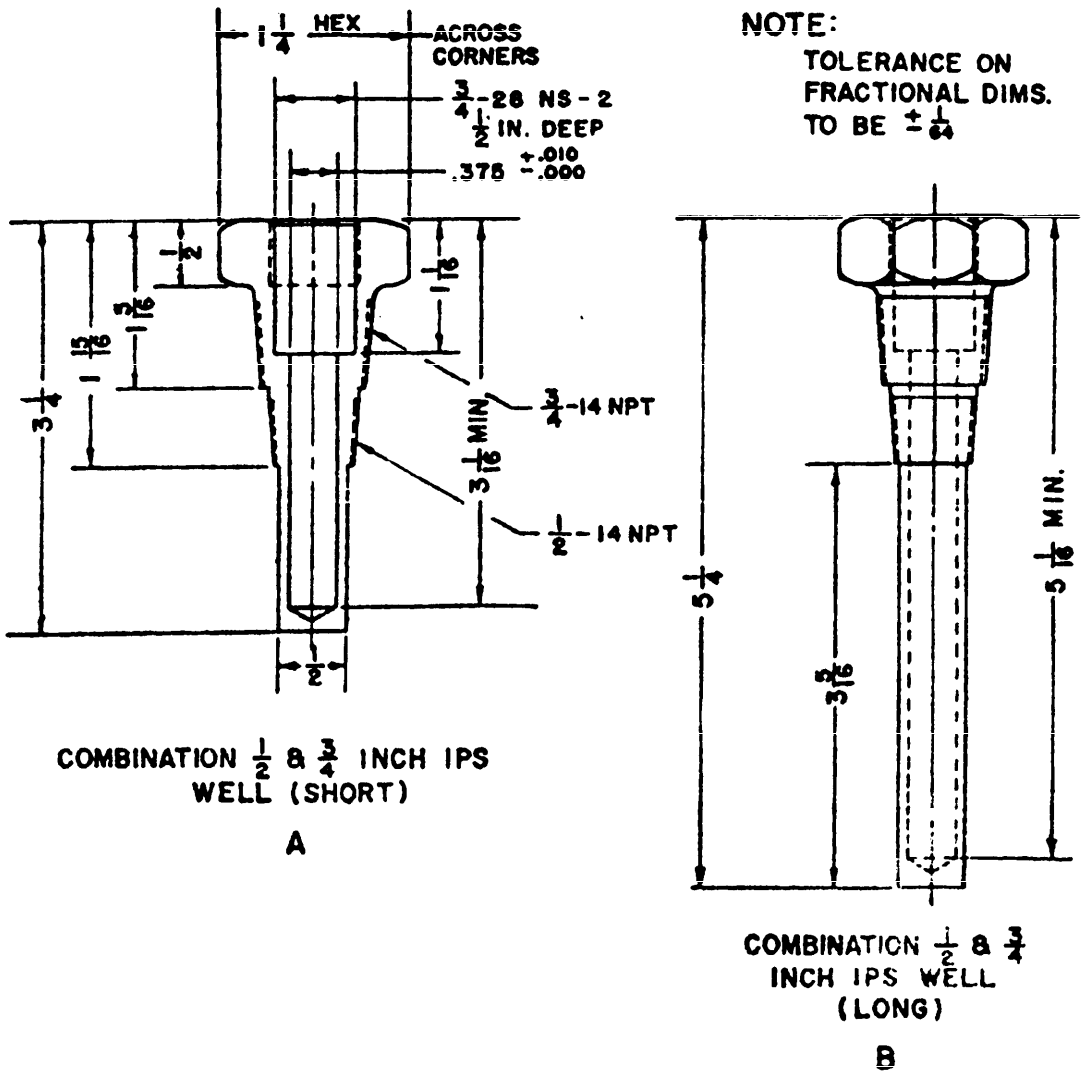

FIGURE 4—Type II, class 3, 5-inch scale thermometers.

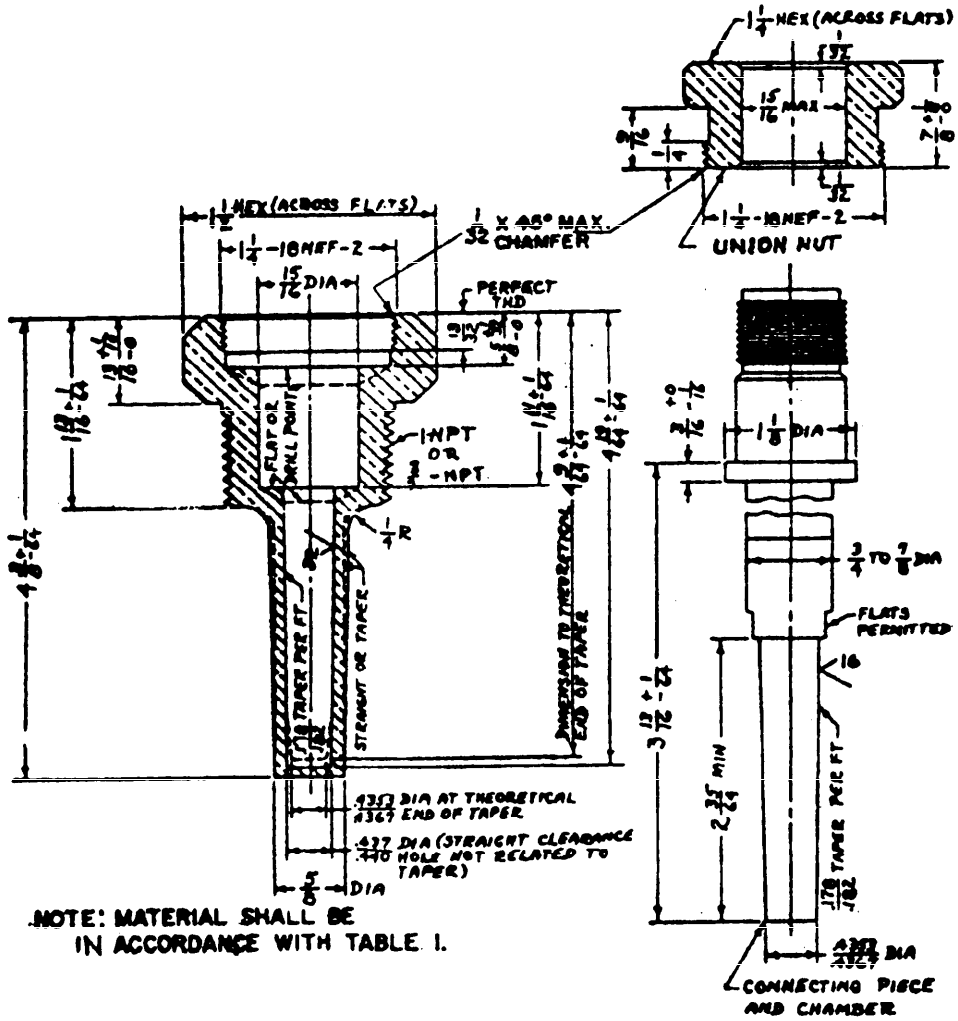

FIGURE 5--Threaded well for style 1, standard 7 or 9 inch scale thermometers

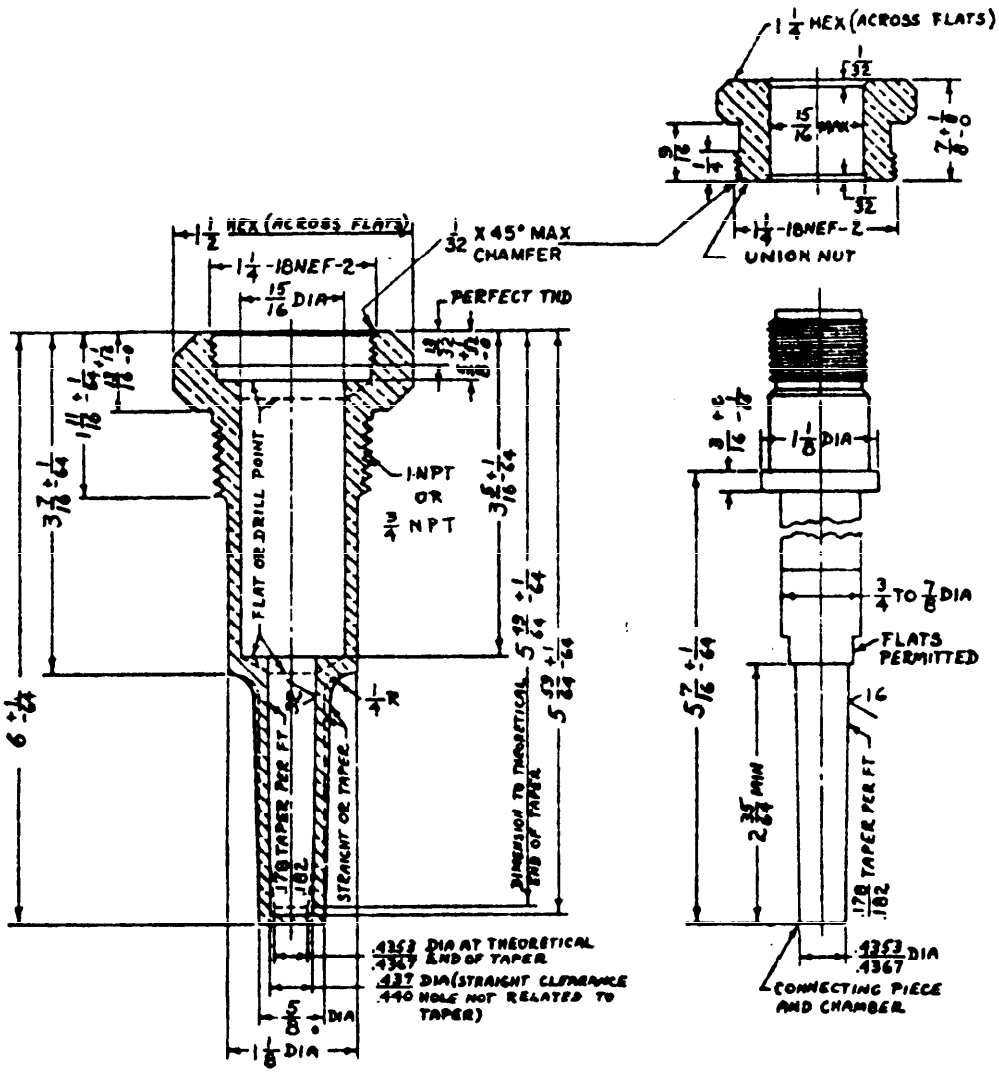

NOTE: MATERIAL SHALL BE IN ACCORDANCE WITH TABLE I.

FIGURE 6--Threaded well for style 2, short extension stem, 7 or 9 inch scale thermometers

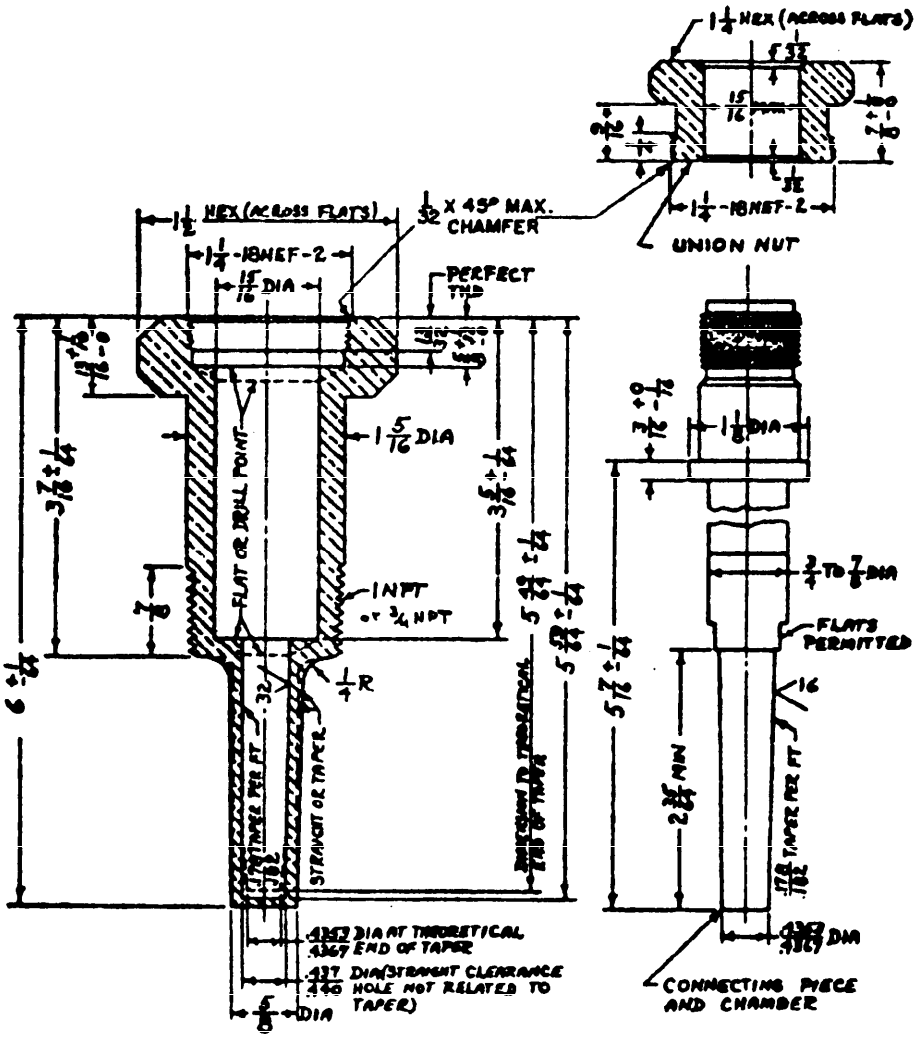

NOTE: MATERIAL SHALL BE IN ACCORDANCE WITH TABLE I.

FIGURE 7--Threaded well for style 3, extension neck, 7 or 9 inch scale thermometers

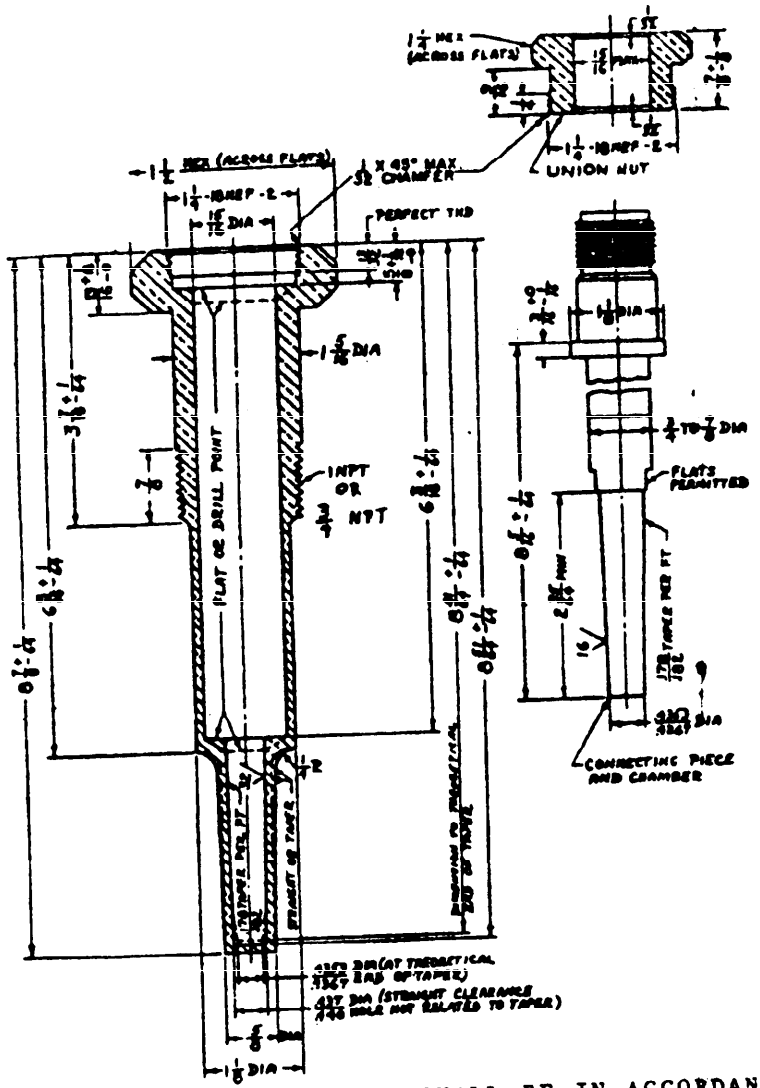

NOTE: MATERIAL SHALL BE IN ACCORDANCE WITH TABLE I.

FIGURE 8--Threaded well for style 4, extension stem; extension neck, 7 or 9 inch scale thermometers

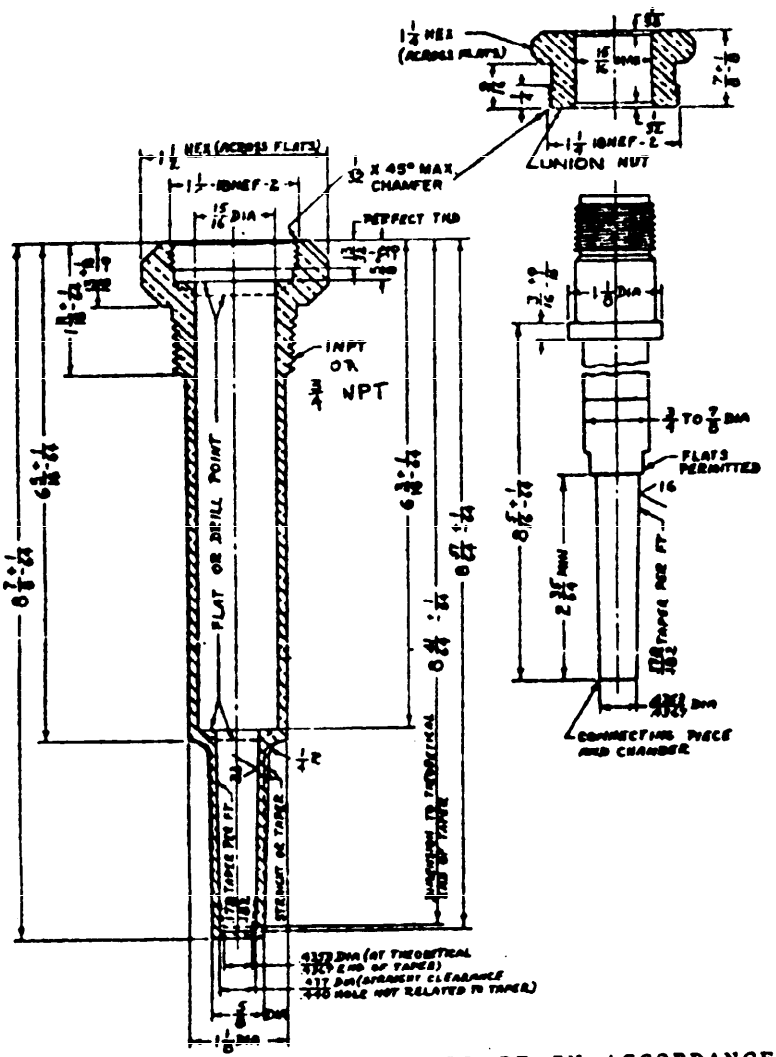

NOTE: MATERIAL SHALL BE IN ACCORDANCE WITH TABLE I.

FIGURE 9--Threaded well for style 5, long extension stem, 7 or 9 inch scale thermometers

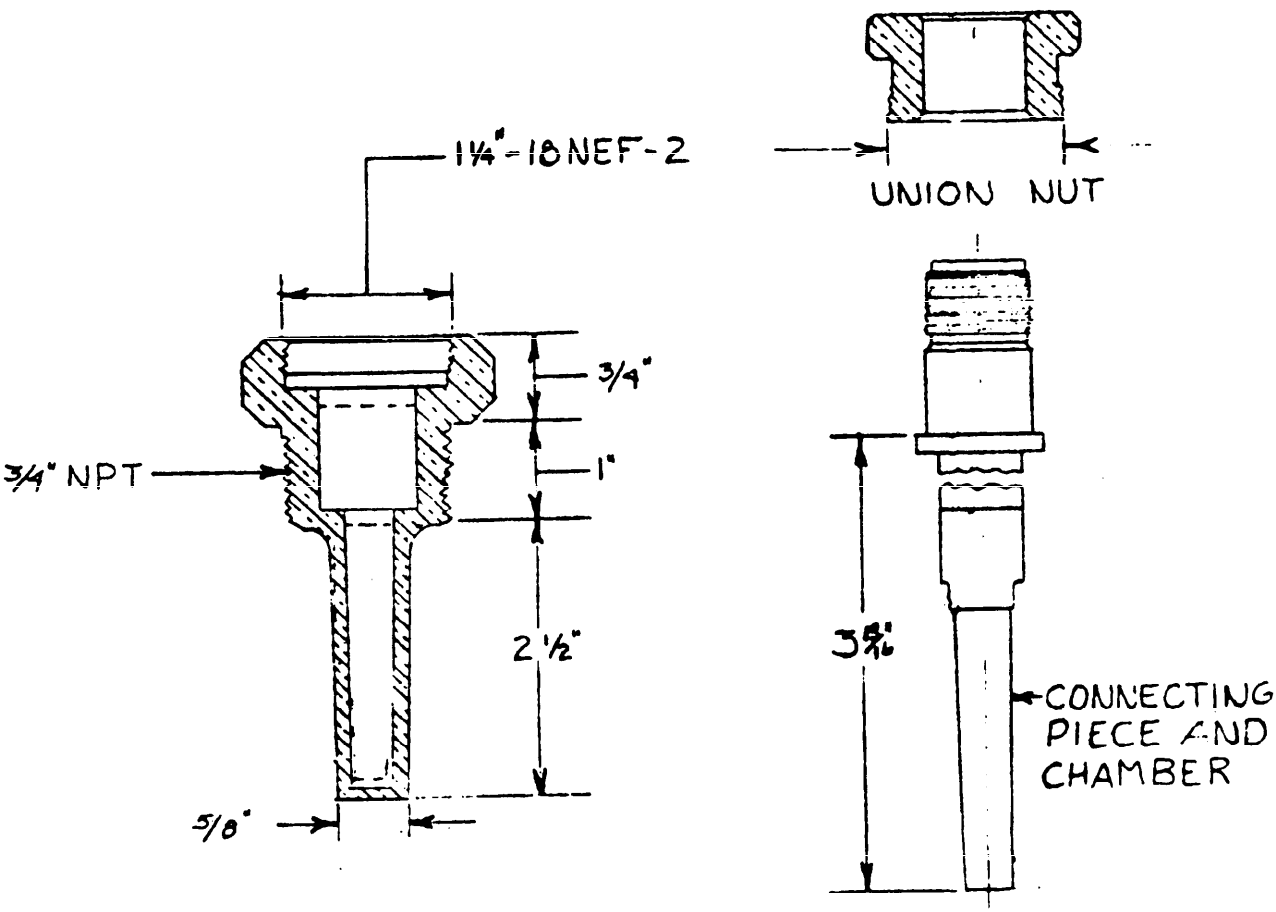

NOTE: MATERIAL SHALL BE IN ACCORDANCE WITH TABLE I.

Figure 10 - Threaded well for commercial type, style 6, standard stem, standard 7- or 9-inch scale thermometers (key dimensions only).

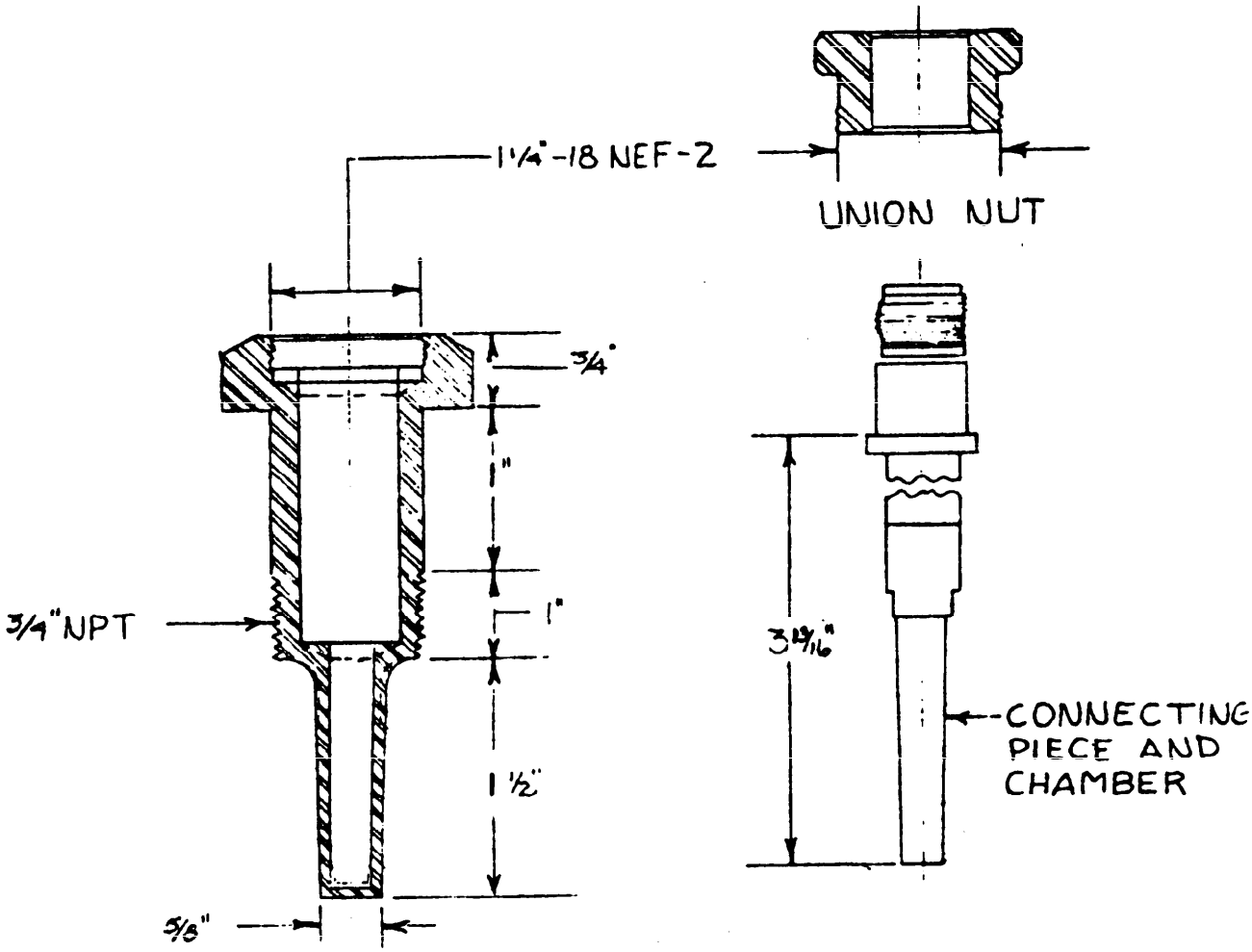

NOTE: MATERIAL SHALL BE IN ACCORDANCE WITH TABLE I.

Figure 11 - Threaded well for commercial type, style 7, standard stem, extension neck, 7- or 9-inch scale thermometers (key dimensions only).

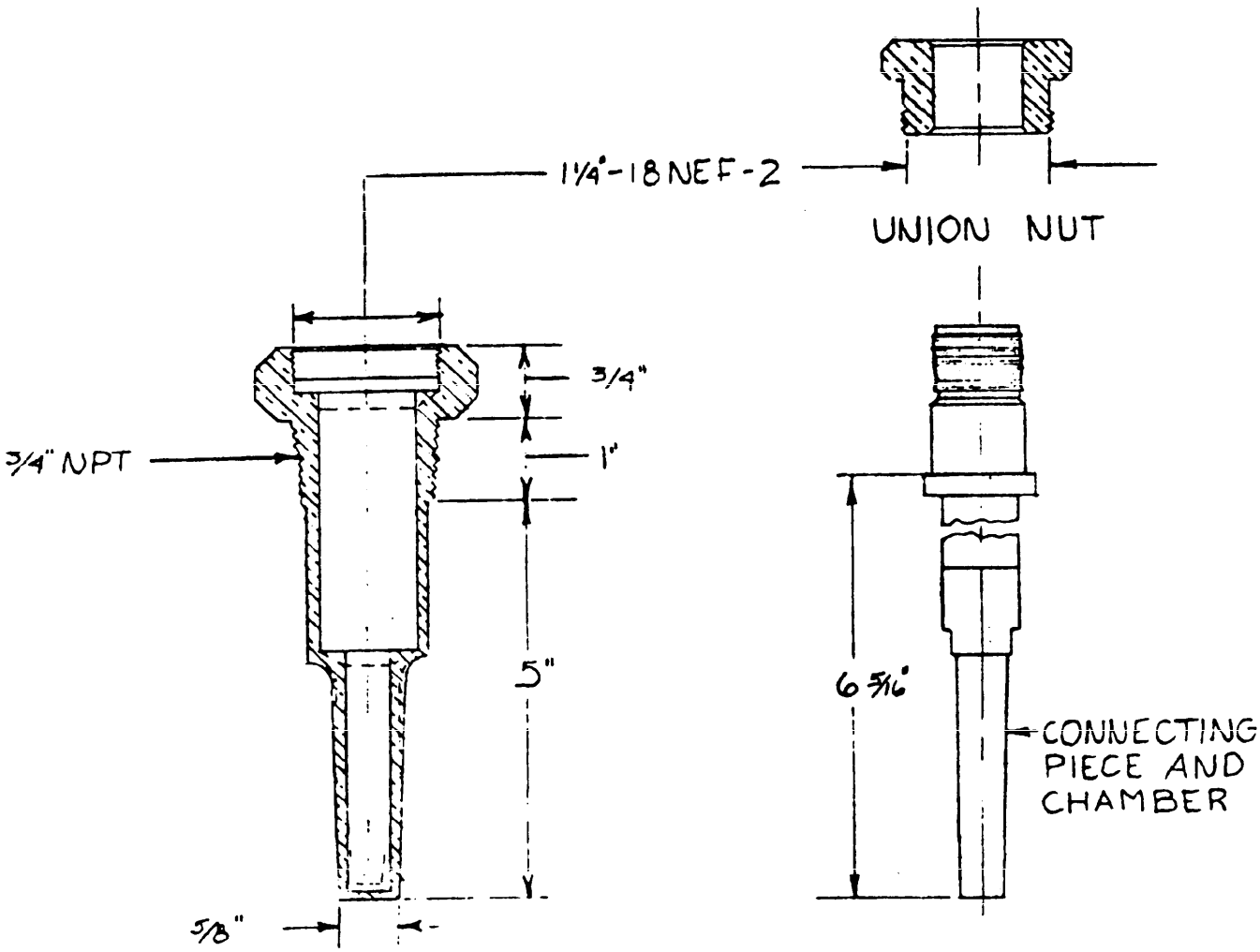

NOTE: MATERIAL SHALL BE IN ACCORDANCE WITH TABLE I.

Figure 12 - Threaded well for commercial type, style 8, short extension stem, 7- or 9-inch scale thermometers (key dimensions only).

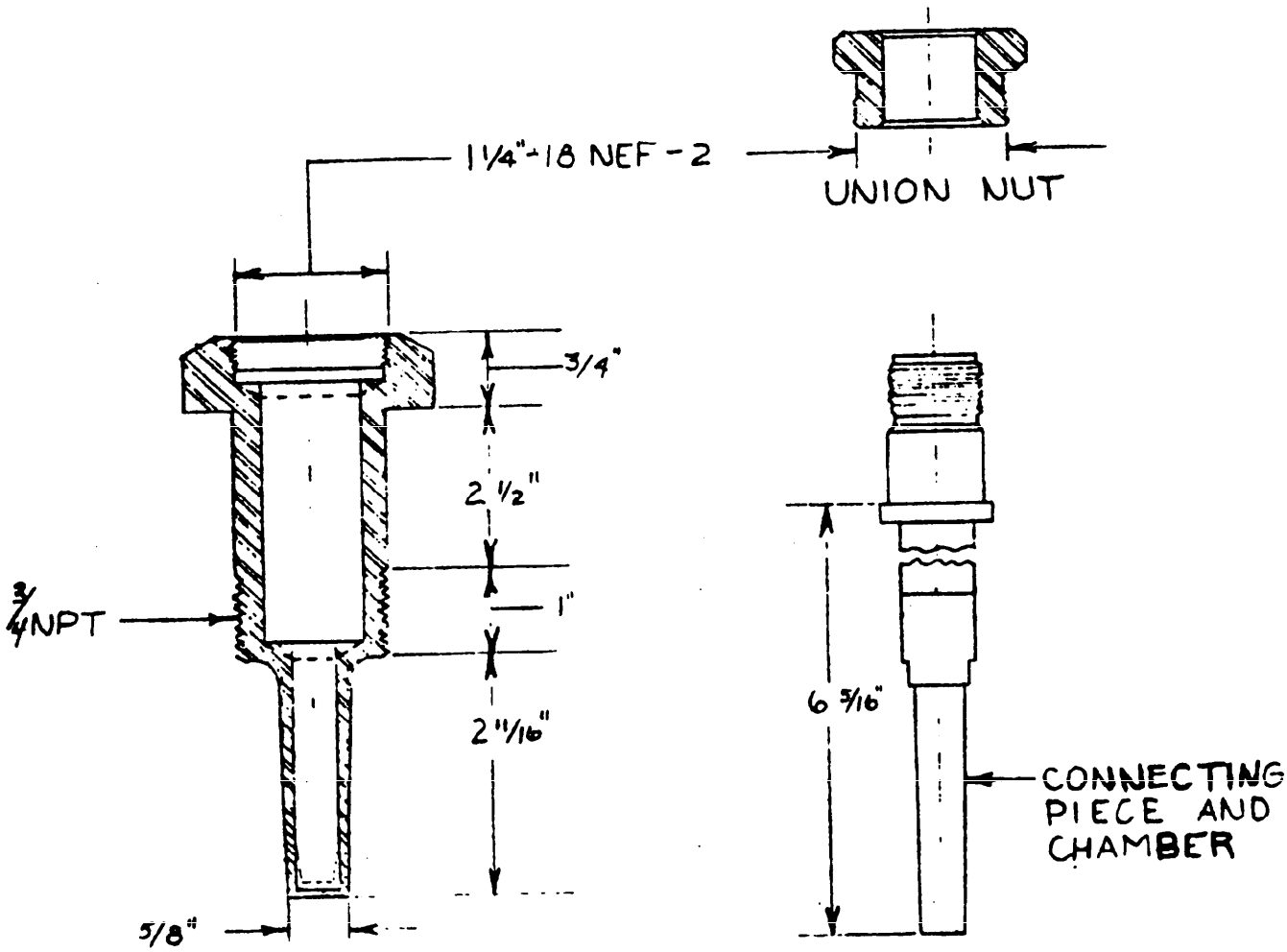

NOTE: MATERIAL SHALL BE IN ACCORDANCE WITH TABLE I.

Figure 13 - Threaded well for commercial type, style 9, extension neck, 7- or 9-inch scale thermometers (key dimensions only).

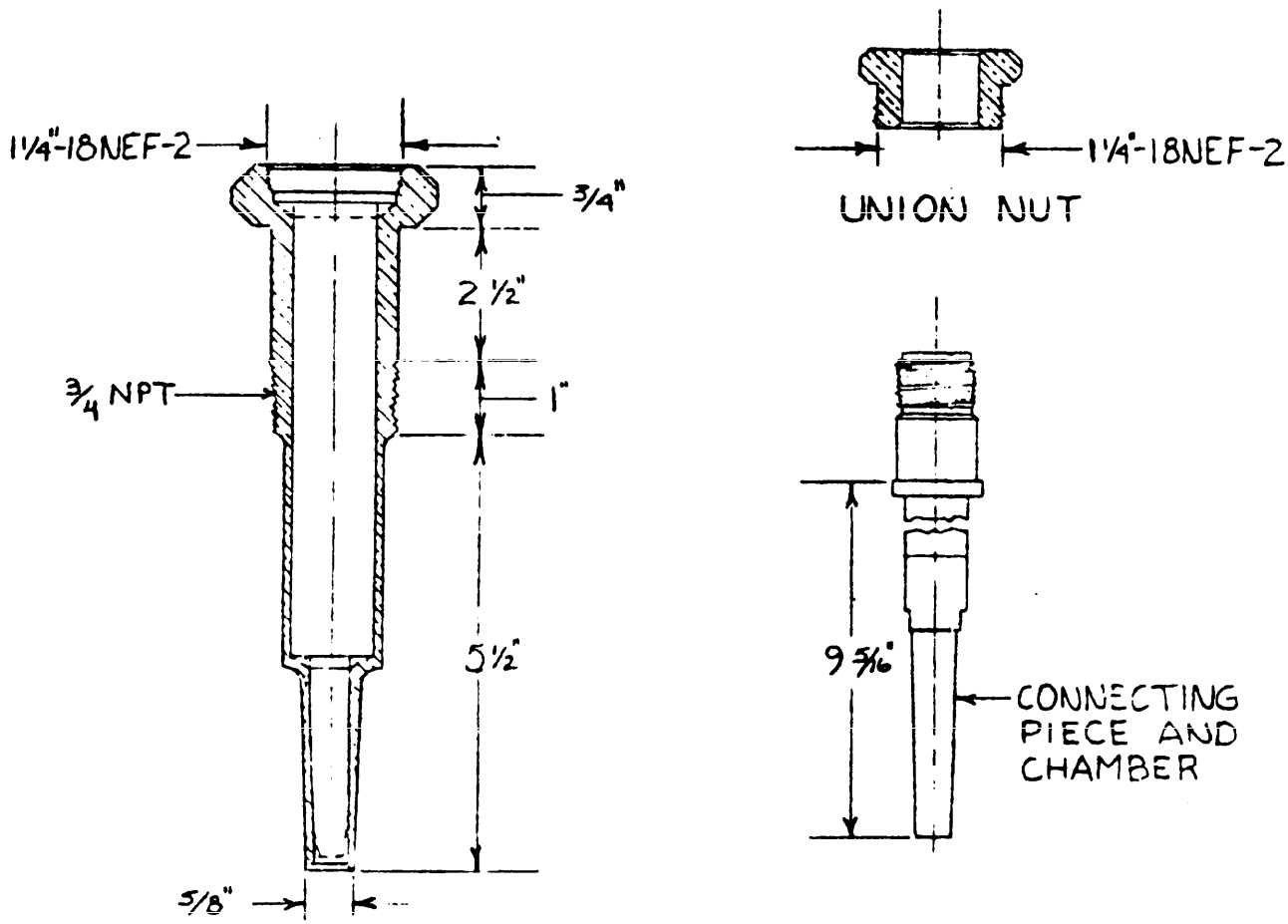

NOTE: MATERIAL SHALL BE IN ACCORDANCE WITH TABLE I.

Figure 14 - Threaded well for commercial type, style 10, extension stem extension neck, 7- or 9-inch scale thermometers (key dimensions only).

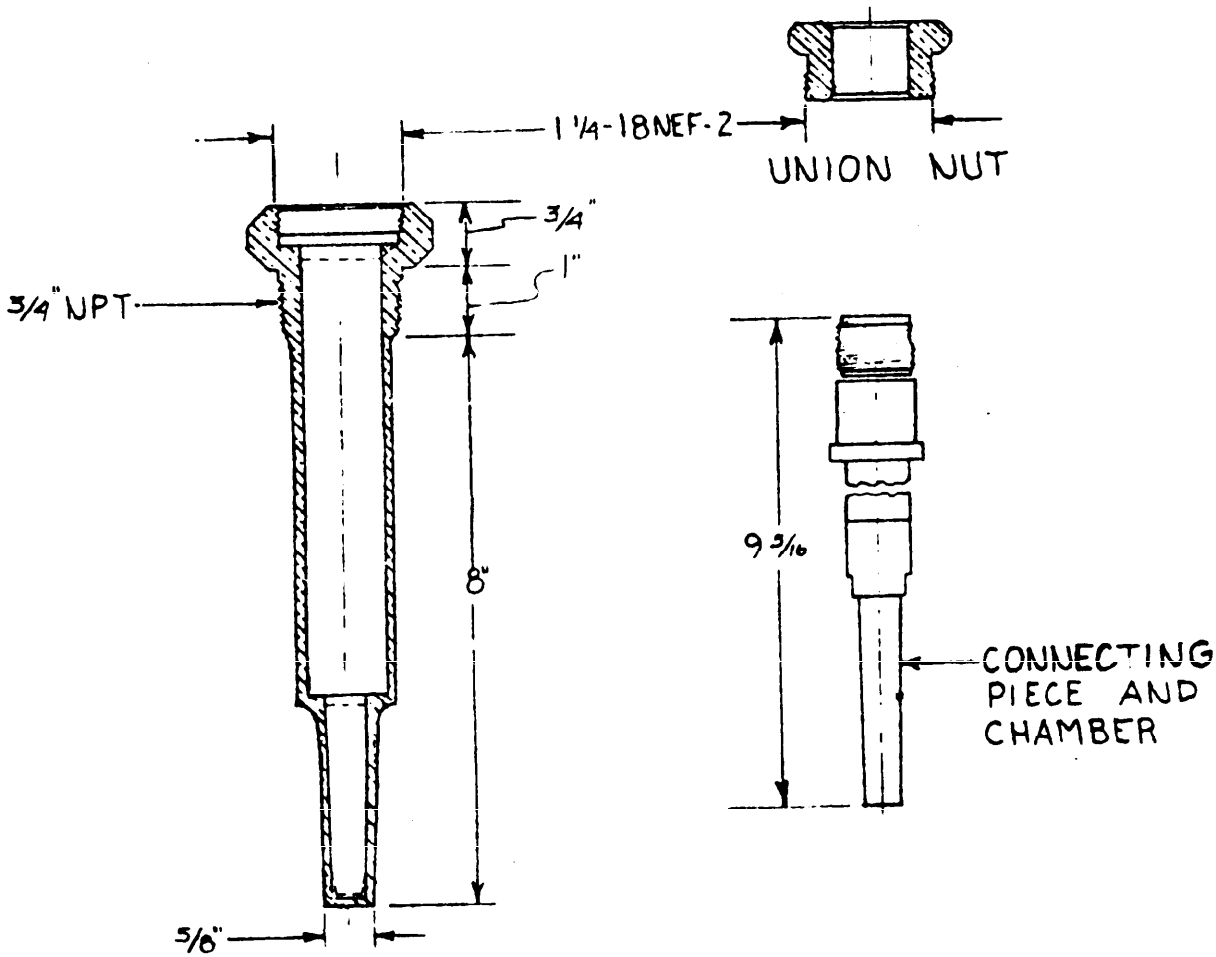

NOTE: MATERIAL SHALL BE IN ACCORDANCE WITH TABLE I.

Figure 15 - Threaded well for commercial type, style 11, long extension stem, 7- or 9-inch scale thermometers (key dimensions only).

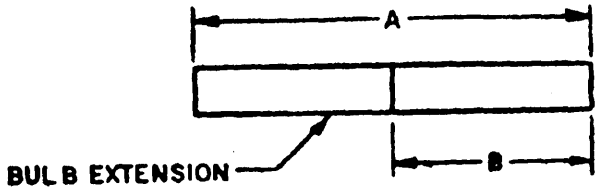

a. UNION BULB

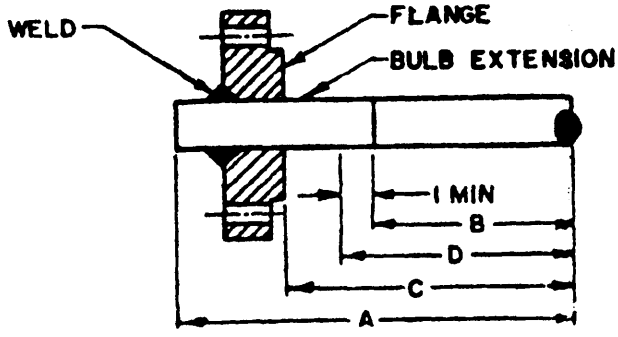

b. FLANGED BULB

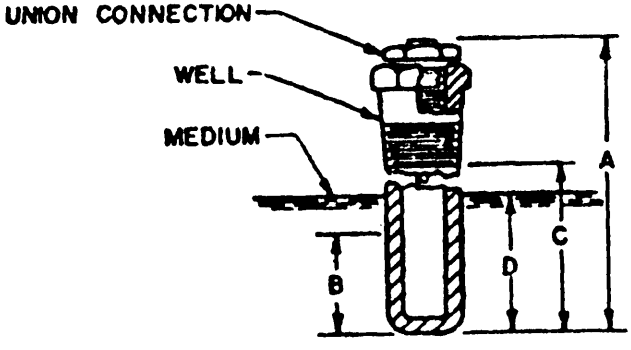

KEY
A – BULB LENGTH
B – SENSITIVE PORTION
C – INSERTION LENGTH
D – IMMERSION LENGTH

c. THREADED WELL (UNION BULB)

FIGURE 16—Bulb design

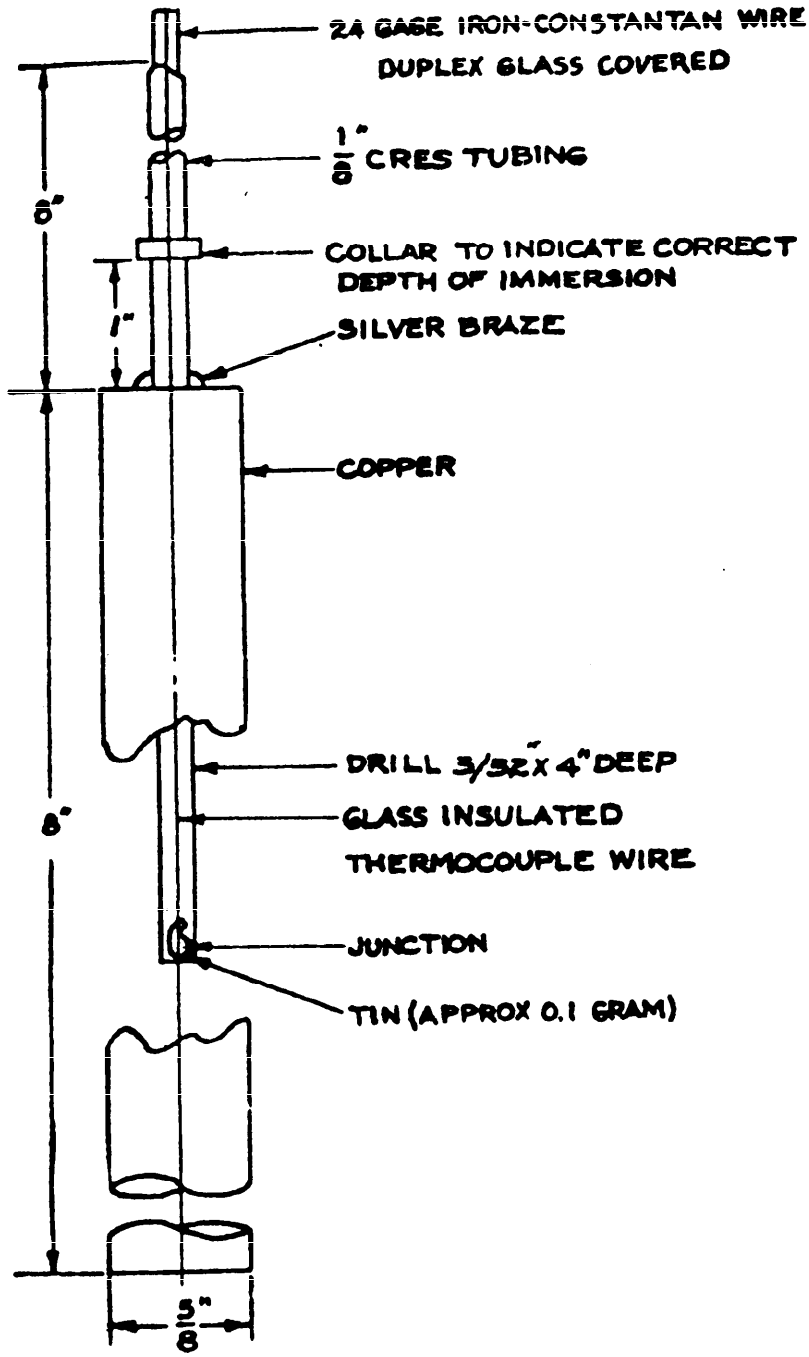

FIGURE 17—Test cylinder