Downloaded from http://www.everyspec.com

[INCH-POUND]
FF-L-2740A
January 12, 1997
SUPERSEDING
FF-L-2740
October 12, 1989

# FEDERAL SPECIFICATION

# LOCKS, COMBINATION

The General Services Administration has authorized the use of this federal specification by all federal agencies.

## 1. SCOPE

1.1 Scope. This specification covers changeable combination locks designed to be mounted on safes, security files, vault doors, and similar items; and intended for the protection of national security information.

## 2. APPLICABLE DOCUMENTS

2.1 Government publications. The following documents, of the issues in effect on the date of invitation for bids or request for proposals, form a part of this specification to the extent specified herein.

Federal Specifications.

AA-F-358 - Filing Cabinet, Steel, Legal and Letter Size, Uninsulated, Security

Federal Standards.

FED-STD-123 - Marking for Domestic Shipment (Civilian Agencies).

(Activities outside the Federal Government may obtain copies of federal specifications, standards, and commercial item descriptions as specified in the General Information section of the Index of Federal Specifications, Standards and Commercial Item Descriptions. The Index is for sale on a subscription basis by the Superintendent of Documents, U. S. Government Printing Office, Washington, DC 20402.

(Single copies of this specification, and other federal specifications and commercial item descriptions required by activities outside the Federal Government for bidding purposes are available without charge from the General Services Administration, Federal Supply Service Bureau, Specification Section, Suite 8100, 470 L'Enfant Plaza, SW, Washington, DC 20407.

(Federal Government activities may obtain copies of federal standardization documents and the Index of Federal Specifications, Standards and Commercial Item Descriptions from established distribution points in their agencies.)

Military Specifications:

MIL-P-116 - Preservation, Methods of
MIL-S-901 - Shock Tests, HI (High Impact) Shipboard Machinery, Equipment and Systems, Requirements for Navy

FSC 5340

Beneficial comments, recommendations, additions, deletions, clarifications, etc. and any data which may improve this document should be sent to: General Services Administration, Federal Supply Service, National Furniture Center, Engineering Division, Washington, DC 20406.

Downloaded from http://www.everyspec.com



Military Standards:

MIL-STD-129 - Marking for Shipment and Storage
MIL-STD-810 - Environmental Test Methods and Engineering Guidelines
MIL-STD-889 - Dissimilar Metals

(Copies of military specifications and standards required by contractors in connection with specific procurement functions are obtained from the Standardization Documents Order Desk, Building 4D, 700 Robbins Avenue, Philadelphia, PA 19111-5094.)

2.2 Other publications. The following documents form a part of this specification to the extent specified herein. Unless a specific issue is identified, the issue in effect on the date of invitation for bids or request for proposals, shall apply.

American Society For Quality Control

ANSI/ASQC Z1.4-1993 - Sampling Procedures and Tables for Inspection by Attributes

(Private sector and civil agencies may purchase copies of these voluntary standards from the American Society For Quality Control, P.O. Box 5551, Milwaukee, WI 53201-0555.)

National Motor Freight Traffic Association, Inc., Agent:

National Motor Freight Classification.

(Private sector and civil agencies may purchase copies of these voluntary standards from the American Trucking Association, Inc., Traffic Department, 2200 Mill Rd., Alexandria, VA 22314.)

Underwriters Laboratories Inc. (UL) Publications:

ANSI/UL 768 - Standard for Combination Locks.

(Private sector and civil agencies may purchase copies of these voluntary standards from Underwriters Laboratories Inc., 333 Pfingsten Rd., Northbrook, IL 60062-2096.)

Uniform Classification Committee, Agent:

Uniform Freight Classification.

(Private sector and civil agencies may purchase copies of these voluntary standards from the National Railroad Freight Committee, Suite 1120, 222 South Riverside Plaza, Chicago, IL 60606.

(DoD activities may obtain copies of those adopted voluntary standards listed in the DoD Index of Specifications and Standards free of charge from the Standardization Document Order Desk, Building 4D, 700 Robbins Avenue, Philadelphia, PA 19111-5094.)

2.3 Order of precedence. In the event of a conflict between the text of this specification and the references cited herein, the text of this specification shall take precedence. Nothing in this specification, however, shall supersede applicable laws and regulations unless a specific exemption is obtained.

3. REQUIREMENTS

Downloaded from http://www.everyspec.com



3.1 Qualification. The locks furnished under this specification shall be products which have been tested and have passed the qualification tests and inspections specified in Section 4, and have been listed on or approved for listing on the applicable Qualified Products List (QPL). No changes may be made in the design or construction of listed products without written approval from the activity responsible for the qualification.

3.1.1 Qualification suspension.

3.1.1.1 Development of entry techniques. The locks qualified under this specification will be continually tested by the Government during the term of qualification to determine whether the entry protection afforded by the locks can be improved. At any time, if entry techniques which affect a lock's integrity are developed within the framework of the specification, the lock shall be removed from the QPL.

3.1.1.2 Change in specification requirements. This specification will be reviewed by the Government to determine whether specification requirements should or can be changed to improve product quality. If, at any time, requirements are changed, and such changes affect the qualification status of a qualified lock, it shall be removed from the QPL and the manufacturer will be required to modify the product to the extent necessary to comply with specification changes and have the product requalified.

3.2 Description. The lock shall be a dial operated, bolt type, combination lock.

3.3 Material.

3.3.1 Materials. Material used shall be free from defects that would adversely affect the performance or maintainability of individual components or of the overall assembly. Materials not specified herein shall be of the same quality used for the intended purpose in the commercial market.

3.3.2 Material deterioration and control. The lock shall be fabricated from compatible materials inherently corrosion- or deterioration-resistant or treated to provide protection against corrosion. Dissimilar metals, as defined in MIL-STD-889, shall be plated or compatible to prevent operationally destructive corrosion.

3.3.3 Electronic components. The manufacturer is responsible for assuring that all electronic components are as approved, and where appropriate, may be inspected and verified to ensure that no security deficiencies exist.

3.3.4 Lock bolt. The lock bolt shall be made of Type 304 stainless steel or equal material that is corrosion resistant, has a minimum tensile strength of 85,000 psi, and a hardness of Rockwell B85.

3.4 Design.

3.4.1 Changing combinations. Changing procedures shall require access to the back of the lock, the lock to have the bolt extended during changing, and shall ensure the operator must know the current combination prior to changing the combination, except in the case of a lost combination. For situations when the combination is lost, a procedure shall be provided to change the lock combination without revealing the lost combination or requiring replacement of components.

3.4.2 Hand change locks. Hand change combination locks shall be designed to be readily combination-changeable by non-technical personnel without the use of special tools. If the assembly is required to be removed for changing, it shall be removable as a subassembly for accessibility and ease of servicing, outside the container. Removal of the lock back cover shall not require removal of more than two screws. The assembly shall be designed to prevent loss of components or improper re-assembly. Parts which must be removed during combination changing shall be durable, reusable and not subject to

Downloaded from http://www.everyspec.com



damage or excessive wear. The change assembly retainer shall be a design easily removed without special tools. Lock design shall not include components which may be inadvertently detached or lost during combination changing. Lock design shall minimize the possibility of improper orientation of parts during re-assembly. The combination setting shall be clearly identified. Simple, illustrated instructions shall be provided.

3.4.3 Key change combination locks. Key change combination locks shall be designed to be readily combination-changeable by use of a key or special tool. Changing the combination shall not require removal or disassembly of the lock.

3.4.4 Bolt lockout. The lock shall have a mechanical relock mechanism that will prevent retraction of the bolt if the lock cover plate is moved more than 0.10 inch (2.54 mm) at any point from its normal operating position.

3.4.5 Combinations. The lock combination shall be selected by dialing. The combination for opening the lock shall not exceed four numbers. Each number shall be within the range of 0 to 99, inclusive. The lock shall have as a minimum 1,000,000 operational combinations, as defined in 6.3.4. Both digits in a double digit number shall be entered at one time. Locks with graduated dials shall be designed to initiate retraction of the bolt on a setting of or near 0 when installed in right hand, left hand, vertical up or vertical down positions.

3.4.6 Lock operation. The dial, spindle, bolt and all internal parts shall operate smoothly for the operating life of the lock, without the addition of anything but manufacturer-specified lubricants and without showing appreciable wear. Locks shall be tested for compliance with this requirement as specified in 4.6.2.

3.4.7 Lock bolt operation. All energy required to retract or extend the lock bolt shall be derived from mechanical operation of the lock dial by the operator. The torque required to retract and extend the bolt shall not exceed 32 inch-ounces (0.225 N-m). When the bolt is in the open position, application of a torque of 50 inch-ounces (0.353 N-m) to the dial shall not cause damage to the dial or spindle.

3.4.8 Combination redial. Once the lock bolt has been extended to the locked position it shall not be possible to reopen the lock without completely redialing the lock combination. For the purposes of this requirement, the locked position means the bolt has been fully extended.

3.4.9 Case access. When the lock is mounted to the test fixture and locked, the assembled lock case shall not allow insertion of any device to permit visual inspection of the interior of the lock.

3.4.10 Wheel torque. When applicable, dynamic wheel pack torque for the lock shall be 16 to 20 inch-ounces (0.113 to 0.141 N-m) to facilitate ease of dialing. Torque shall remain within the specified range for the operating life of the lock, when tested in accordance with 4.6.2. Lock design may provide for adjustment of the torque to remain in the specified range. The dial and rotating internal parts shall not be free-wheeling.

3.4.11 Temperature. The lock shall operate in a temperature range of -10ºF to 158ºF (-23.3ºC to 70.0ºC). Locks shall be tested for compliance with this requirement in accordance with 4.6.10.

3.4.12 Moisture absorption and humidity. The lock shall be designed to operate in a humidity range of 10 to 98 percent relative humidity for its operating life. Locks shall be tested for compliance with this requirement in accordance with 4.6.6.

3.4.13 Vibration. Locks shall be subjected to environmental vibration tests, as specified in 4.6.9. Operation and security performance and tolerance shall remain within standards.

Downloaded from http://www.everyspec.com



3.4.14 Shock. Locks shall be subjected to shock tests in accordance with 4.6.7.

3.4.15 Electromagnetic pulse. Electromechanical locks shall be subjected to electromagnetic pulse tests simulating a high altitude nuclear detonation, as specified in 4.6.11. The lock shall operate normally after exposure.

3.4.16 Electrostatic discharge. Electromechanical locks shall resist damage due to electrostatic discharge. Locks shall be tested to 250,000 volts, as specified in 4.6.12. The lock shall operate normally after exposure.

3.5 Construction.

3.5.1 General. Locks supplied under this specification shall be interchangeable with existing combination locks listed as Group 1R under UL Standard 768.

3.5.2 Dial and dial ring. Lock dials shall be top or front reading design and shall be provided with suitable dial rings. Locks shall have a dial and dial ring not less than 3 inches (76 mm) in diameter. The dial and dial ring design shall prevent casual observation of the combination during dialing. Logos or non-essential markings or features which may be related to the numeric setting shall not appear on the dial or other exposed movable surfaces. Once properly installed and in a secured condition, the dial, dial ring, and any other exterior component assembly, or parts thereof, shall not be removable without causing observable physical damage.

3.5.2.1 Graduated dials. When a graduated dial is provided, the dial shall be numbered with distinct divisions to facilitate reading. The dial shall be not less than 3 inches(76 mm) in diameter. A dust cover shall be supplied to cover the dial and dial ring. The cover shall not interfere with normal dialing operation. When installed, only the knob of the dial shall be available to grasp for rotation purposes. All other movable surfaces shall be shielded from touch.

3.5.3 Spindle. Unless otherwise specified, the lock shall be furnished with a spindle that can be cut to length to suit doors or drawers of varying thickness between 0.5 and 3.5 inches (12.7 and 89 mm) in combined thickness. The spindle diameter, including tubes, cables and other components between the dial and lock case, shall not exceed 0.375 inch (9.5 mm).

3.5.4 Case and cover. The case and cover dimensions shall be as shown in Figure 1. The cover shall be held in place by not more than two screws, each fitted with a lock washer or other means of securing the screw. The lock shall allow attachment to the door or drawer by means of four, 0.250 inch 20 UNC-2a machine screws, located as shown in Figure 1. Unless otherwise specified, machine screws shall be provided of sufficient length to extend 0.25 inch (6 mm) beyond the exterior of the lock case. The lock case mounting and spindle hole locations shall be as shown in Figure 1.

3.5.5 Lock bolt. Unless otherwise specified, the lock bolt cross-section shall be 0.310 $\pm$0.005 inch by 0.995 +0.005,-0.003 inch (7.87 mm $\pm$ 0.13 mm by 25.27 mm +0.13 mm,-0.08 mm). The bolt throw shall be not less than 0.312 inch (7.92 mm). Any variations in the bolt dimensions shall be approved by the activity responsible for the lock qualification.

3.5.6 Finish. All surfaces shall have a uniform finish of sufficient smoothness to accept markings required.

3.5.7 Workmanship. The lock shall be free of sharp edges, burrs, slivers, or other defects affecting appearance, operation, or serviceability.

3.6 Security.

Downloaded from http://www.everyspec.com



3.6.1 Government testing. The Government reserves the right of testing the combination lock in accordance with standards that are privileged to the Government.

3.6.2 Surreptitious entry. The lock shall be tested for resistance to surreptitious entry as specified in 4.6.8.3.

3.6.2.1 Manipulation. The lock shall resist opening through manipulation for a period of 20 man-hours.

3.6.2.2 Radiological analysis. The lock shall resist opening through radiological analysis for a period of 20 man-hours.

3.6.2.3 Emanations analysis. The lock shall not emit sounds or other signals which may be used to surreptitiously open the lock within a period of 20 man-hours.

3.6.3 Covert entry. The lock shall resist covert entry for a period of 30 man-minutes, when tested as specified in 4.6.8.4.

3.6.4 Case and bolt strength. The lock case and bolt shall withstand the test specified in 4.6.8.5 without any fracture or bending of the bolt or case.

3.7 Marking. Each lock shall be marked with the month and year of manufacture on the dial, dial ring and lock case. Marking shall be embossed, impressed or engraved. Markings on the dial ring and dial shall be located so that they are not exposed when the lock is mounted. Marking on the lock case shall be visible on removal of the lock back cover.

3.8 Regulatory requirements. The manufacturer is encouraged to use recovered materials in accordance with Public Law 94-580, as amended, to the maximum extent practicable.

3.9 Instructions. Manufacturer’s instructions, normally furnished in commercial practice, describing how to mount and operate the lock shall be furnished with each lock. For locks shipped in bulk to container or vault door manufacturers, instructions shall be provided for inclusion with the container or door.

## 4. QUALITY ASSURANCE PROVISIONS

4.1 Responsibility for inspection. Except that testing for qualification shall be performed by an agency designated by the General Services Administration, the supplier is responsible for the performance of all inspection requirements as specified herein. Except as otherwise specified, the supplier may use his own or any other facilities suitable for the performance of the inspection requirements specified herein, unless disapproved by the Government. Inspection records of the examination and tests with itemized results shall be kept complete at the manufacturer's facility, available to the Government throughout the duration of the contract, or a minimum of two years, whichever is longer. The Government reserves the right to perform any of the inspections set forth in the specification where such inspections are deemed necessary to assure supplies and services conform to prescribed requirements.

4.1.1 Responsibility for compliance. All items must meet all requirements of Sections 3 and 5. The inspections set forth in this specification shall become a part of the supplier's overall inspection system or quality program. The absence of any inspection requirements in the specification shall not relieve the contractor of the responsibility of assuring that all products or supplies submitted to the Government for acceptance comply with all requirements of the specification. Sampling in quality conformance does not authorize the submission of known defective material, either indicated or actual, nor does it commit the Government to acceptance of defective material.

Downloaded from http://www.everyspec.com



4.1.2 Component and material inspection. In accordance with 4.1, the supplier is responsible for insuring that components and materials are manufactured, tested and inspected in accordance with the requirements of referenced specifications and standards to the extent specified or, if none, in accordance with this specification.

4.2 Qualification testing and inspection. Qualification testing and inspection shall consist of the following tests and inspections in the order shown. Failure to meet any one or more of these requirements shall provide reason to consider the product as having failed to meet the requirement for qualification.

(a) Inspections - 4.7
(b) Operation test - 4.6.2
(c) Wear test - 4.6.3
(d) Salt spray corrosion test - 4.6.4
(e) Aging-stress distortion test - 4.6.5
(f) Moisture absorption - 4.6.6
(g) Vibration test - 4.6.9
(h) Shock test - 4.6.7
(i) Temperature test - 4.6.10
(j) Case and bolt strength test - 4.6.8.5
(k) Security tests - 4.6.8
(l) Electromagnetic pulse test - 4.6.11
(m) Electrostatic discharge test - 4.6.12

4.3 Inspection and testing for acceptance. The Government reserves the right to inspect and test each lock, including all component parts thereof, delivered for acceptance under this specification after award of contract.

4.3.1 Inspection. Locks delivered for acceptance under contract or order shall be inspected as specified in 4.4. Any nonconformance shall provide reason to reject the product. Rejected locks may be reworked to correct nonconformance and they may be submitted for acceptance. Reworked locks shall be so indicated to the Government inspector.

4.3.2 Testing. Periodically, during the term of the contract, the Government inspector, at a time convenient to the Government, will select samples of the manufacturer's regular production and subject them to the tests in 4.6. This acceptance testing shall be performed by a Government agency specifically designated by the General Services Administration. Failure of the lock to meet any one or more of these tests shall provide reason to suspend acceptance of the manufacturer's product until the Government is satisfied that all defects have been corrected.

4.4 Quality conformance inspection. The quality conformance inspection shall include the examinations specified in 4.4.1, and preparation for delivery inspections specified in 4.4.2.

4.4.1 End item inspection. The locks shall be examined for nonconformance in accordance with Table I. Sampling and inspection procedures shall be in accordance with ANSI/ASQC Z1.4. The unit of product shall be a complete lock. All combination locks offered for delivery at one time shall be considered a lot for the purpose of inspection. The inspection level shall be level II with an Acceptable Quality Level (AQL) of 2.5 percent nonconforming.

Downloaded from http://www.everyspec.com



Table I. Examination for nonconformance.

| |
|---|
| Material is not resistant to corrosion and deterioration, nor treated to be resistant to corrosion and deterioration for the applicable storage and operating conditions. |
| Dissimilar metals as defined in MIL-STD-889 are not treated or plated to prevent corrosion. |
| Supplier does not have documentation available for identification of material, material finishes or treatment. |
| Used, rebuilt or remanufactured component, pieces or parts incorporated in the locks. Design not as specified. |
| Security of lock not as specified. |
| Dimensions not as specified. |
| Lock subassembly not as specified. |
| Bolt lockout device not as specified. |
| Lock torque not as specified. |
| Dial ring not as specified. |
| Dial not as specified. |
| Spindle not as specified. |
| Dust cover not as specified. |
| Markings incorrect, missing or illegible. |
| Finish not as specified. |
| Instruction not furnished, or not as specified. |
| Workmanship not as specified. |

4.4.2 Inspection of preparation for delivery. An inspection shall be made to determine that packaging, packing and marking comply with those specified in Section 5 of this specification. For examination of interior packaging, the sample unit shall be one shipping container fully prepared for delivery, selected at random just prior to the closing operations. Sampling shall be in accordance with ANSI/ASQC Z1.4. Nonconformity of closure listed shall be examined on shipping containers fully prepared for delivery. The lot size shall be the number of shipping containers in the end item inspection lot. The inspection level shall be S-2 with an AQL of 4.0 nonconformities per hundred units.

TABLE II. Classification of preparation for delivery defects.

| | |
|---|---|
| Packaging | Instruction sheet not in unit container with lock. |
| | Change key not in unit container with lock. |
| | Unit container not sealed with reinforced tape. |
| | Improper quantity of locks placed in intermediate container. |
| Packing | Shipping container not as specified. |
| | Shipping container weights exceed specified limitations. |
| Marking | Marking not in accordance with FED-STD-123 or MIL-STD-129, as specified. |
| | Marking not in accordance with the contract or order. |
| | Item description marked on unit container. |
| | Unit containers not marked or labeled with special instructions as specified. |

4.5 Qualification testing.

4.5.1 Testing agency. Qualification tests on products submitted for inclusion on the applicable Qualified Products List (QPL) under this specification and any retesting that may be required shall be performed by a testing agency specifically designated or approved by the General Services Administration.

Downloaded from http://www.everyspec.com



4.5.2 Testing costs. All testing costs entailed in determining the qualification of the supplier's product, including costs of retesting a qualified product if subsequently disqualified under 3.1.1.1 or 3.1.1.2, shall be borne by the supplier, and shall be payable to the General Services Administration as directed by the General Services Administration Federal Supply Service.

4.5.3 Test procedures. The following procedures shall govern the testing of all products submitted for qualification under this specification.

(a) Samples shall be submitted for qualification only after the supplier has obtained written authorization from the General Services Administration.

(b) A qualification test may be discontinued at the Government's testing facility at any time the product fails to meet any one of the requirements set forth in this specification. The manufacturer may be permitted to make modifications on the sample during the testing phase where such modifications, in the judgment of the General Services Administration and the testing facility, are clearly in the interest of the Government.

(c) In case of failure of the sample, consideration will be given to the request of the manufacturer for submission for retest only after it has been clearly shown that changes have been made in the product which the Government considers sufficient to warrant retest.

(d) The manufacturer or his representative will not be permitted to observe the tests conducted on his product at the testing facility. However, when samples tested fail to comply with the requirements of this specification, the sample may be examined by the manufacturer or his representatives and full details of the failure may be made known to them in a manner which, for reasons of security, will be in the best interest of the Government. Appropriate security clearances or access approvals may be required prior to release of information relating to test procedures or results.

4.5.4 Test samples. Twenty test samples shall be submitted to a laboratory specified by the General Services Administration. In the event the samples are destroyed or damaged to such an extent during testing that testing cannot be completed, the Government reserves the right to require the manufacturer to furnish additional samples necessary to complete the testing.

4.5.5 Drawings and list of materials. The manufacturer shall furnish five complete sets of construction and assembly drawings and lists of materials with samples submitted for qualification. The manufacturer shall provide schematics of all electronic circuitry and provide documented source code listings of all software/firmware used in the lock. The government shall have the right to request additional information as required to ensure security provided by submissions meet requirements. When the samples are tested and are approved for inclusion on the applicable QPL, three sets of the drawings and lists of materials shall be marked by the General Services Administration with the Government's approval. One set of drawings shall be returned to the manufacturer. Drawings will be used in inspections of products offered to the Government. All material so furnished by the manufacturer will be held in proprietary confidence.

4.5.5.1 Changes in construction or drawings. Once a product has been tested and approved for QPL, no subsequent change of any kind shall be made in its construction or in the construction drawings unless prior written authorization to make a change is obtained by the manufacturer from the Federal Supply Service, General Services Administration.

4.6 Tests.

4.6.1 Break-in period. All tests shall be conducted before and after completion of the operation test in 4.6.2 and, for mechanical locks, the wear test in 4.6.3. Failure of the lock in either phase shall be cause for rejection.

Downloaded from http://www.everyspec.com



4.6.2 Operation test. The lock shall be subjected to 10,000 cycles of operation without addition of lubricants and without replacement of any component. One cycle shall consist of dialing the combination at a speed not exceeding 48 revolutions per minute, retracting the bolt, throwing the bolt and scrambling the combination. Following the cycling, the lock shall be subjected to 50 combination changes including 3 open-and-close operational verifications after each change. When a graduated dial is used, the lock shall then be checked to verify that the dialing tolerance is still within the acceptable range specified by UL 768. After completion of the cycling and combination changes, the lock shall operate smoothly and the dial torque shall be in the range specified in 3.4.7. When applicable, wheel torque shall be in the range specified in 3.4.10. Any failure of the lock during test shall be cause for rejection.

4.6.3 Wear test (mechanical locks). While in the locked condition, the lock shall have the dial turned at 600 rpm for a period of not less than 8 hours, 4 hours in a clockwise direction and 4 hours in a counterclockwise direction. At the end of 8 hours, it shall not be possible to open the lock through surreptitious or covert techniques as specified in 4.6.8.3 and 4.6.8.4.

4.6.4 Salt spray corrosion test. Locks shall be tested in accordance with UL 768 Salt Spray Corrosion Test. Electromechanical locks shall be operated five times after each 24-hour period. Any failure of the lock to open and/or failure of any portion of the combination display device on an electronic lock shall result in failure of the test.

4.6.5 Aging-stress distortion. Locks shall be tested in accordance with UL 768 Aging-Stress Distortion test.

4.6.6 Moisture absorption. Locks shall be tested in accordance with MIL-STD-810, Method 507.3, Procedure III - Aggravated. Locks shall be tested in the operational mode with a test duration of 10 cycles.

4.6.7 Shock test. Locks shall be tested in accordance with MIL-S-901 Test Category: Lightweight, Shock Grade: A, Equipment Class: I, Shock Test Type: C, Mounting Location: Deck mounted.

4.6.8 Security tests.

4.6.8.1 Test fixture. Security tests shall be conducted with the lock mounted in each of the four mounting configurations, i.e., vertical up, vertical down, horizontal right, horizontal left. The security tests shall be conducted with the lock mounted to a test fixture. The fixture shall consist of a steel plate, 9.5 to 12.7 mm thick, mounted in an upright position. The plate shall be approximately 480 mm wide by 279 mm high. A plate of equal thickness and dimensions shall be used for the base. The test fixture shall be representative of an approved safe or vault door lock box (hard plate) and shall be drilled and tapped to allow mounting in all four positions using the screws specified in paragraph 3.5.4. When a 9.5 mm plate is used, the thickness shall be increased to 12.7 mm at the lock mounting location.

4.6.8.2 Tools. Tools used for a single test shall be limited to a maximum weight of 70 kg.

4.6.8.3 Surreptitious entry. Attempts shall be made to unlock the lock through manipulation, radiological analysis and emanations analysis. Manipulation may include the use of automatic dialing devices. Manipulation and analysis may include the use of computer enhancement techniques for signals or emanations. The lock shall resist opening for the times specified in 3.6.2.

4.6.8.4 Covert entry. For the purpose of the covert entry test, access to the lock shall be limited to the dial and spindle. The lock shall resist covert opening for the period specified in 3.6.3.

4.6.8.5 Case and bolt strength. Mount the lock on a test stand so that the bolt extends at least 2.5 mm beyond the edge of the stand, as shown in Figure 2. Apply a force of 2669 N to the bolt as shown in the

Downloaded from http://www.everyspec.com



figure. Examine the case and bolt for damage. Apply a force of 2669 N to the bolt as shown in Figure 3. Any fracture or bending of the bolt or case or movement of the bolt more than 2.5 mm shall be a failure.

4.6.9 Vibration. The vibration test of MIL-STD-810 shall be conducted. Locks shall be checked for conformance to the operation, security and tolerance requirements. There shall be no movement or damage which affects normal operation or security.

4.6.10 Temperature test.

4.6.10.1 Low temperature test. The lock shall be placed in a chamber maintained at a temperature of -10°F (-23°C) for a period of three hours or until the lock temperature has stabilized. At the end of that period, without removing the lock from the chamber, ten attempts shall be made to open the lock, using normal dialing procedures. The lock shall open at least six out of ten times. Slower than normal operation of electro-mechanical lock designs is not considered failure. After ten attempts, the lock shall be removed from the chamber and allowed to return to room temperature. Ten more opening attempts shall be made. The lock shall open all ten times. The lock shall be examined for any damage or defects due to the low temperature exposure. There shall be no defects affecting the operation or life of the lock.

4.6.10.2 High temperature test. The lock shall be placed in a chamber maintained at a temperature of 155°F (68°C) for a period of three hours. At the end of that period, the lock shall be removed from the chamber and without allowing time for the lock to cool, the lock shall be opened five times using normal dialing procedures. The lock shall then be placed back in the chamber and the temperature shall be increased to 170°F (76.7°C). After one hour, the lock shall be removed from the chamber and an attempt shall be made to open it. Retraction of the lock bolt shall constitute failure (see 3.4.11).

4.6.11 Electromagnetic pulse. The lock shall be installed in a Class 6 security file cabinet as decribed in federal specification AA-F-358. The installed lock shall be tested in 4 orientations at each field level: front-on, drawer closed; front-on, drawer open; side-on, drawer closed; side-on, drawer open. The lock shall withstand 10 pulses in each orientation. The lock shall be subjected to transient pulse illumination with electric field peaks within the range of 28 to 37 kV/m with a 1.5 to 3.0 ns risetime. After exposure at each field level, the lock shall operate normally.

4.6.12 Electrostatic discharge. The lock shall be mounted on the test stand described in 4.6.8.1. The lock dial shall be subjected to 5 electrostatic discharges of 250 kV. After exposure, the lock shall operate normally.

4.7 Inspections. A visual inspection shall be made to determine compliance with the requirements specified in the following paragraphs:

3.3.1 Materials
3.4.2 Hand change locks
3.4.3 Key change locks
3.4.4 Bolt lockout
3.4.5 Combinations
3.4.6 Lock operation
3.4.7 Lock bolt operation
3.4.8 Combination redial
3.4.9 Case access
3.4.10 Wheel torque
3.5.2 Dial and dial rings
3.5.3 Spindle
3.5.4 Case and cover
3.5.5 Lock bolt
3.5.6 Finish

Downloaded from http://www.everyspec.com



3.5.7 Workmanship
3.7 Marking
3.9 Instructions

5. PREPARATION FOR DELIVERY

5.1 Packaging. Installation and combination changing instructions and the combination change key (when applicable) shall be placed in an envelope. Each lock and envelope shall be packaged in a close-fitting fiberboard box. The box shall be sealed with reinforced tape. Ten locks shall be placed in a close-fitting fiberboard box.

5.2 Packing. Locks, packaged as specified in 5.1, shall be packed to ensure carrier acceptance in accordance with the National Motor Freight Classification and Uniform Freight Classification.

5.3 Marking. Marking shall be in accordance with FED-STD-123 or MIL-STD-129, as specified.

5.3.1 Additional marking. Each unit container specified in 5.1 shall be marked with the following special instructions:

IMPORTANT

TO BE OPENED BY DESIGNATED

USER SECURITY PERSONNEL ONLY

The letters shall be 1/4 inch high minimum. Color to be red or black and shall be applied by marking the reinforced sealing tape (see 5.1) or by application of preprinted labels.

6. NOTES

6.1 Intended use. Combination locks covered by this specification are intended for use on safes, safe lockers, security containers, vault doors and similar items (see 1.1).

6.2 Ordering data. Purchasers shall specify the following:

a. Title numbers and date of this specification
b. Level of packaging and packing required.

6.3 Definitions.

6.3.1 Covert entry. For the purpose of this specification, covert entry means a method of entry which would leave evidence, but would not be detectable by a user during normal use, but would be detectable during inspection by a qualified person.

6.3.2 Entry. For the purpose of this specification, entry means retracting the bolt.

6.3.3 Normal use. For the purpose of this specification, normal use means dialing the combination, retracting the bolt, and extending the bolt.

6.3.4 Operational combinations. Operational combinations are combinations which may be set on the lock after excluding those settings which are prohibited by the manufacturer due to the lock design.

Downloaded from http://www.everyspec.com



Operational combinations include those settings which are not recommended for use, but which exist, such as 20-40-60.

6.3.5 Surreptitious entry. For the purpose of this specification, surreptitious entry means a method of entry, such as manipulation or radiological attack, which would not be detectable during normal use or during inspection by a qualified person.

6.4 Samples. All samples required for test purposes shall be furnished at no expense to the Government and the manufacturer shall pay all transportation to and from the point where the tests are performed. All tested samples shall become property of the Government but may be released to the manufacturer at the option of the Government. Upon request, the manufacturer shall furnish to the Government testing facility, a lock equal in respect to that of the qualified sample for use in inspection and test during the term of qualification. The lock shall be returned to the manufacturer upon removal of the product from the Qualified Products List.

Downloaded from http://www.everyspec.com

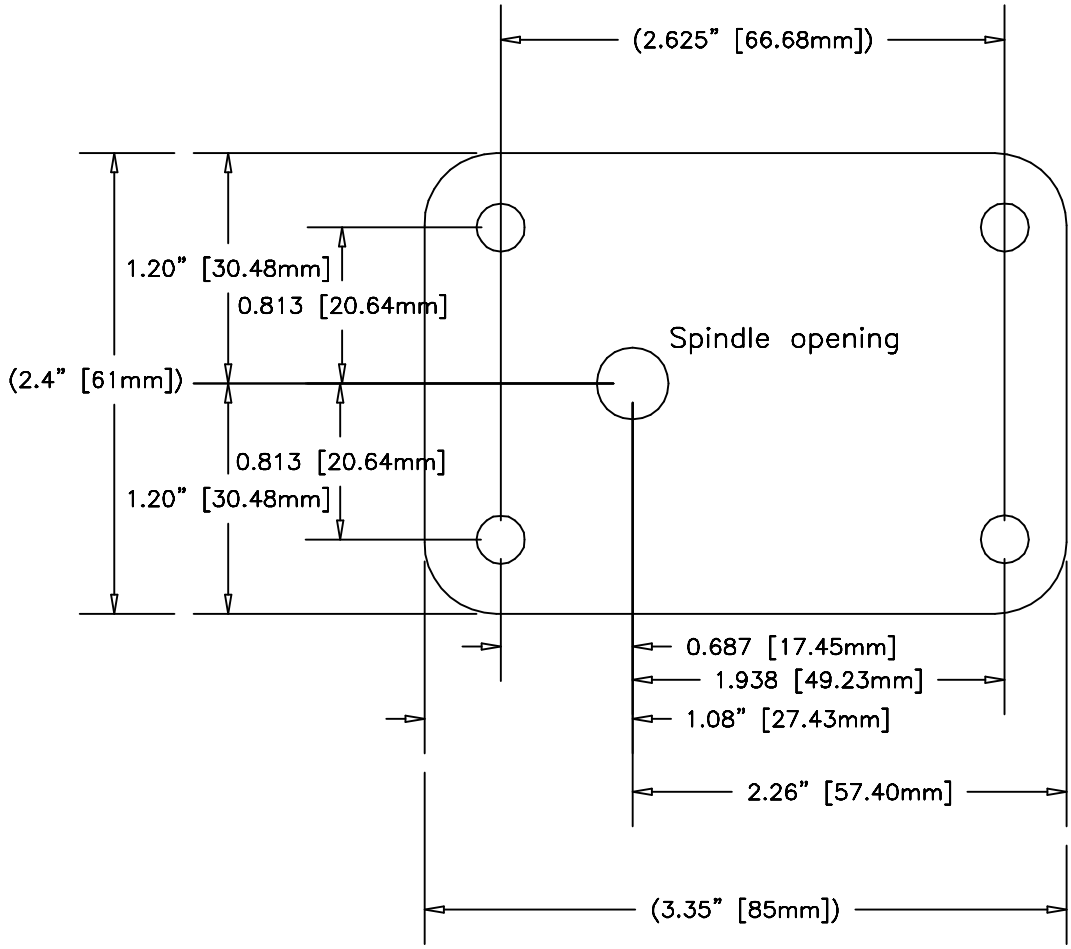


Tolerances:
XX.XX ±0.01 [±0.25 mm]
XX.XXX ±0.005 [±0.13 mm]

FIGURE 1
Schematic arrangement of lock case holes.

Downloaded from http://www.everyspec.com

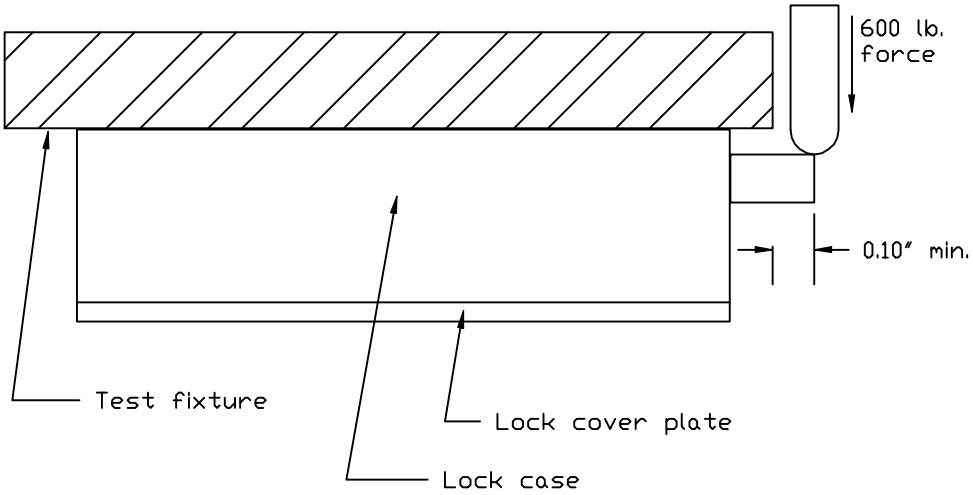


FIGURE 2
Case and bolt strength test

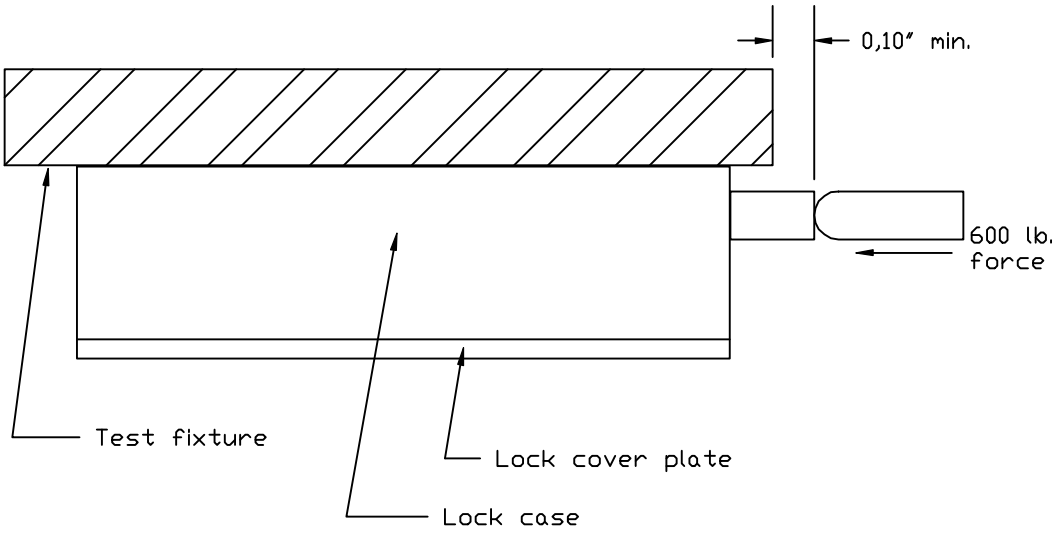


FIGURE 3
Bolt end pressure test