Downloaded from http://www.everyspec.com

FED-STD-H28/9A
24 March 1989
SUPERSEDING
FED-STD-H28/9
31 August 1978

FEDERAL STANDARD
SCREW-THREAD STANDARDS FOR FEDERAL SERVICES
SECTION 9
GAS CYLINDER VALVE OUTLET AND INLET THREADS

This standard was approved by the Commissioner, Federal Supply Service, General Services Administration, for the use of all Federal agencies.

AMSC N/A THDS

DISTRIBUTION STATEMENT A. Approved for public release; distribution is unlimited.

Downloaded from http://www.everyspec.com

INFORMATION SHEET ON FEDERAL STANDARDS

This Federal Standard is issued in loose leaf form to permit the insertion or removal of new or revised pages and sections.

All users of Federal Standards should keep them up to date by inserting revised or new pages as issued and removing superseded and cancelled pages.

New and revised pages will be issued under Change Notices which will be numbered consecutively and will bear the date of issuance. Change Notices should be retained and filed in front of the Standard until such time as they are superseded by a reissue of the entire Standard.

FOREWORD

The first efforts to develop standards for compressed gas cylinder valve threads followed immediately after World War I, and were inspired by the difficulties encountered both by industry and the military services because of the multiplicity of connections that were then in use.

Through the activity of the Gas Cylinder Valve Thread Committee of the Compressed Gas Manufacturers' Association, Inc., material progress was made through the years that followed, with the result that, when the United States became involved in World War II, the gas industries themselves had materially improved this situation. Several of the compressed gas industries had achieved virtual standardization at tremendous cost for replacement of valve equipment. Their standards, however, were not completely formalized nor fully coordinated with other related standards. Much of the progress between World War I and World War II was the result of interest in the problem by the Federal Specifications Board.

The circumstances surrounding industrial and military users of compressed gases during World War II brought into clear focus the need for acceleration of the standardizing project for cylinder valve threads. They created not only the necessity but also a splendid opportunity for the compressed gas industry, the Military services, and other Federal agencies to study cooperatively the standardizing problems of outlet valve threads. These studies resulted in closer definition and appreciation of each valve outlet and in a more balanced relationship between the many types and sizes.

Downloaded from http://www.everyspec.com

When the Standards Associations representing Great Britain, Canada, and the United States met in Ottawa in October 1945 to consider unification of screw threads, a fairly well developed plan for standardization of compressed gas cylinder valve threads was presented to the Conference by the Valve Thread Standardization Committee of the Compressed Gas Manufacturers' Association, Inc. (CGMA). These proposed standards represented the experience and knowledge of compressed gas manufacturers, valve manufacturers, and the needs and requirements of varied users of gas cylinder valves, including the Military services and other Federal agencies. Approval of these standards to the extent to which they were then developed was given by the U.S. Department of Commerce, the U.S. Army, and the U.S. Navy through the Interdepartmental Screw Thread Committee following a joint meeting with the representatives of CGMA in August 1945. Much progress was made later in that year at the Canadian Section Meeting of CGMA tending to unify United States and Canadian practices.

During January 1946, through conference between representatives of CGMA Valve Thread Standardization Committee and the Interdepartmental Screw Thread Committee in Washington, agreements were reached that resulted in final approval of considerable additional gas cylinder valve thread data. These data were included in 1950 supplement to Handbook H28. The 1957 issue of H28 included more detailed data on outlet and inlet connections than were previously shown.

The first issue of FED-STD-H28/9, in accordance with Government policy, removed the details of the connections. These were replaced by reference to the Compressed Gas Association (formerly CGMA) Standard V-1-1977. This standard included not only threaded connections but also unthreaded yoke types. For medical gas cylinder valve connections, a pin index system for the yoke type connections is used to prevent cross-connections between gasses. Only when the pins in a yoke correspond to the holes in a valve will a gas tight seal be possible. This system was submitted to the International Organization for Standardization (ISO) Technical Committee 58 and was adopted in the standard ISO 407-1983.

FED-STD-H28/9A was prepared by the Defense Industrial Supply Center (DLA-IS). It updates FED-STD-H28/9 to be in consonance with the Compressed Gas Association (CGA) Standard V-1-1987. The following significant changes in the threaded connections include:

(1) Addition of design formulas for NGO series threads.
(2) Addition of data for sizes 1.040-14NGO-RH/LH-EXT, 1.045-14NGO-RH/LH-INT, 1.103-14NGO-RH/LH-EXT, 1.108-14NGO-RH/LH-INT, 1.120-14NGO-RH/LH-EXT, 1.125-14NGO-RH/LH-INT, and 3/4-14NGT (C1)-5. Diameter data for 3/4-14NGT (C1) master gages were changed to agree with long threads specified.

Downloaded from http://www.everyspec.com

CONTENTS

			Page
Paragraph	1.	Scope	1
	2.	Referenced documents	1
	2.1	Government publications	1
	2.2	Other publications	2
	3.	Definitions	11
	4.	General requirements	11
	4.1	Outlet connections	11
	4.2	Inlet connections	12
	4.3	Safety device threads	12
	5.	Detailed requirements	12
	5.1	Outlet connection threads	12
	5.1.1	National Gas Outlet (NGO) threads	13
	5.2	Inlet connection threads	19
	5.2.1	National Gas Taper (NGT) threads	19
	5.2.2	National Gas Taper threads for chlorine (NGT(Cl))	19
	5.2.3	Special Gas Taper (SGT) threads	22
	5.2.4	National Gas Straight (NGS)threads	22
	5.2.5	Gages and gaging for NGT, NGT(Cl) and SGT threads	23
	5.2.6	Gaging of external thread pitch diameter	23
	5.2.7	Gaging of external thread crest truncation	24
	5.2.8	Gaging of external thread root truncation	24
	5.2.9	Gaging of internal thread pitch diameter	25
	5.2.10	Gaging of internal thread crest truncation	26
	5.2.11	Gaging of internal thread maximum bore	26
	5.2.12	Gaging of internal thread root truncation	27
	5.3	Safety device threads	27

FIGURES

Figure	9.1	NGO Internal thread design profile	14
	9.2	NGO External thread design profile	15
	9.3	Relationship between internal and external thread dimensions of NGT, NGT(Cl) and SGT threads	31
	9.4	Master setting plug and ring gages for setting pitch diameters of threaded plug and ring gages for NGT, NGT(Cl) and SGT	32
	9.5	Master setting plug and ring gages for setting and checking major diameters of plug and ring gages for NGT, NGT(Cl) and SGT	33
	9.6	Master setting plug and ring gages for setting and checking minor diameters of plug and ring gages for NGT, NGT(Cl) and SGT	34

Downloaded from http://www.everyspec.com

FIGURES

Page

Figure 9.7 Pitch diameter ring gages for NGT, NGT(C1) and SGT..... 35
9.8 Crest truncation ring gage for NGT, NGT(C1) and SGT..... 36
9.9 Root truncation ring gage for NGT, NGT(C1) and SGT..... 37
9.10 Pitch diameter plug gage for NGT, NGT(C1) and SGT..... 38
9.11 Crest truncation plug gage for NGT, NGT(C1) and SGT..... 39
9.12 Maximum bore plug gage for NGT, NGT(C1) and SGT..... 40
9.13 Root truncation plug gage for NGT, NGT(C1) and SGT..... 41

TABLES

Table IX.1 Numerical listing of valve outlet connections showing the connecting threads..... 3
IX.2 Inlet connecting threads..... 10
IX.3 Outlet connection thread requirements..... 12
IX.4 NGO thread size calculation formulas..... 16
IX.5 Data for calculation of NGO thread sizes.... 17
IX.6 Limits of size of U.S. compressed gas cylinder valve outlet threads, NGO..... 18
IX.7 Limits of size of National Gas Taper and Special Gas Taper Threads: NGT, NGT(C1), SGT..... 20
IX.8 Data for gages for NGT, NGT(C1) and SGT external threads..... 28
IX.9 Data for gages for NGT, NGT(C1) and SGT internal threads..... 29
IX.10 Master setting gage tolerances for NGT, NGT(C1) and SGT..... 30

Downloaded from http://www.everyspec.com

SECTION 9 - GAS CYLINDER VALVE OUTLET AND INLET THREADS

1. Scope. This section provides the standards for special screw threads applicable to compressed gas cylinder valve connections.

2. Referenced documents.

2.1 Government publications. The issues of the following documents in effect on the date of invitation for bids or request for proposal form a part of this standard to the extent specified herein.

Federal standards.

FED-STD-H28/1 Nomenclature, Definitions and Letter Symbols for Screw Threads.

FED-STD-H28/2 Unified Inch Screw Threads - UN and UNR Thread Forms

FED-STD-H28/6 Gages and Gaging for Unified Screw Threads - UN and UNR Thread Forms

FED-STD-H28/7 Pipe Threads, General Purpose

FED-STD-H28/20 Inspection Methods for Acceptability of UN, UNR, UNJ, M, and MJ Screw Threads

(Activites outside the Federal Government may obtain copies of Federal specifications, standards and commercial item descriptions as outlined under General Information in the Index of Federal Specifications, Standards, and Commercial Item Descriptions. The Index, which includes cumulative bi-monthly supplements as issued, is for sale on a subscription basis by the Superintendent of Documents, U.S. Government Printing Office, Washington, DC 20402.)

(Single copies of this standard and other Federal specifications, standards and commercial item descriptions required by activities outside the Federal Government for bidding purposes are available from the General Services Administration Specification Section, Room 6662, 7th and D Streets, S.W., Washington, DC 20407; telephone (202) 472-2205.

(Federal Government activities may obtain copies of Federal standardization documents, and the Index of Federal Specifications, Standards, and Commercial Item Descriptions from established distribution points in their agencies.)

Downloaded from http://www.everyspec.com

2.2 Other publications. The following documents form a part of this standard to the extent specified herein. Unless a specific issue is identified, the issue in effect on date of invitation for bids or request for proposal shall apply.

American National Standards.

ANSI/CSA/CGA V-1-1987 - Compressed Gas Cylinder Valve Outlet and Inlet Connections

(Application for copies should be addressed to the Compressed Gas Association, 1235 Jefferson Davis Highway, Arlington, VA 22202-3269 or the American National Standards Institute, 1430 Broadway, New York, NY 10018-3308.)

TABLE IX.1-Numerical listing of valve outlet connections showing the connecting threads

Valve Outlet Connection Number	Thread	NBS H28 (1966)	CGA V-1 1977	ANSI/ CSA/ CGA V-1 1987	Remarks
110	.3125-32UNEF-2B-RH-INT	No	Yes	Yes	Limited standard.
120	.373-24NGO-RH-EXT	Yes	No	No	Eliminated by CGA in 1977 - new standard 180.
160	1/8-27NGT-RH-INT	Yes	Yes	Yes	Alternate or limited standard.
165	.4375-20UNF-2A-RH-EXT (1/4" SAE Flare)	No	Yes	Yes	Limited standard.
170	.5625-18UNF-2A-RH-EXT	No	Yes	Yes	Limited standard.
180	.625-18UNF-2A-RH-EXT	No	Yes	Yes	Limited standard.
182	.625-18UNF-2A-RH-EXT (3/8" SAE Flare)	No	Yes	Yes	Limited standard.
200	.625-20NGO-RH-EXT (Conical Nipple)	Yes	Yes	Yes	Limited standard.
240	3/8-18NGT-RH-INT	Yes	Yes	Yes	

Downloaded from http://www.everyspec.com

Valve Outlet Connection Number	Thread	NBS H28 (1966)	CGA V-1 1977	ANSI/ CSA/ CGA V-1 1987	Remarks
260	3/8-18NGT-RH-INT (with 1-14NS-2LH-INT on nut)	Yes	No	No	Was only alternate in H28 - eliminated by CGA in 1965 - New CGA standard 240, 705.
280	.745-14NGO-RH-EXT	No	Yes	Yes	Added by CGA in 1965.
290	.745-14NGO-LH-EXT	Yes	Yes	Yes	Limited standard.
295	.750-16UNF-2A-RH-EXT (1/2" SAE Flare)	No	Yes	Yes	
296	.803-14UNS-2B-RH-INT(MOD) (Bullet Nipple)	No	Yes	Yes	
300	.825-14NGO-RH-EXT (Conical Nipple)	Yes	Yes	Yes	Changed to standard.
320	.825-14NGO-RH-EXT (Flat Nipple)	Yes	Yes	Yes	
326	.825-14NGO-RH-EXT (Small Round Nipple)	No	Yes	Yes	Formerly 1320; added by CGA in 1965.
330	.825-14NGO-RH-EXT (Flat Nipple)	Yes	Yes	Yes	

Downloaded from http://www.everyspec.com

Valve Outlet Connection Number	Thread	NBS H28 (1966)	CGA V-1 1977	ANSI/ CSA/ CGA V-1 1987	Remarks
340	1/2-14NGT-RH-EXT	Yes	No	No	Eliminated by CGA in 1965.
346	.825-14NGO-RH-EXT (Large Round Nipple)	No	Yes	Yes	Formerly 1340; added by CGA in 1965.
347	.825-14NGO-RH-EXT (Long Round Nipple)	No	No	Yes	
350	.825-14NGO-LH-EXT (Round Nipple)	Yes	Yes	Yes	
360	1/2-14NGT-RH-EXT	Yes	No	No	Eliminated by CGA in 1977 - New standard 510, 668.
380	1/2-14NGT-RH-INT	Yes	No	No	Eliminated by CGA in 1965.
410	.850-14NGO-LH-EXT (Round Nipple)	No	Yes	Yes	For Canada only: Alternate standard.
415	.850-14NGO-LH-EXT (Flat Nipple)	No	No	Yes	For Canada only: Limited standard.
440	.875-14UNF-2A-RH-EXT (5/8" SAE Flare)	No	Yes	Yes	
450	.875-14UNF-2A-LH-EXT (5/8" SAE Flare)	No	Yes	Yes	
500	.885-14NGO-RH-INT (Bullet Nipple)	No	Yes	Yes	
510	.885-14NGO-LH-INT (Bullet Nipple)	Yes	Yes	Yes	
520	.895-18NGO-RH-EXT	Yes	Yes	Yes	Limited standard.
540	.903-14NGO-RH-EXT	Yes	Yes	Yes	

Downloaded from http://www.everyspec.com

Valve Outlet Connection Number	Thread	NBS H28 (1966)	CGA V-1 1977	ANSI/ CSA/ CGA V-1 1987	Remarks
555	.903-14NGO-LH-EXT	No	Yes	Yes	Connection used by industry in past - added in 1977. (Formerly known as 1550).
577	.960-14NGO-RH-EXT	No	No	Yes	
580	.965-14NGO-RH-INT	Yes	Yes	Yes	
590	.965-14NGO-LH-INT	Yes	Yes	Yes	
600	1.000-20UNEF-RH-EXT	No	No	Yes	Limited standard.
620	1.030-14NGO-RH-EXT (with face groove)	Yes	No	No	Eliminated by CGA in 1977 - (New CGA std. 668, 510, 660, 350).
640	1.030-14NGO-RH-EXT (with 1/8-27NGT-RH-INT)	Yes	No	No	Eliminated by CGA in 1977 - (New CGA std.750).
660	1.030-14NGO-RH-EXT (Face Washer) (Without Groove)	Yes	Yes	Yes	
668	1.030-14NGO-RH-EXT (Recessed Washer)	No	Yes	Yes	Alternate standard.
670	1.030-14NGO-LH-EXT (Face Washer)	Yes	Yes	Yes	
677	1.030-14NGO-LH-EXT (Round Nipple)	No	Yes	Yes	
678	1.030-14NGO-LH-EXT (Recessed Washer)	No	Yes	Yes	

Downloaded from http://www.everyspec.com

Valve Outlet Connection Number	Thread	NBS H28 (1966)	CGA V-1 1977	ANSI/ CSA/ CGA V-1 1987	Remarks
679	1.030-14NGO-LH-EXT (Tipped Nipple)	No	Yes	Yes	
680	1.045-14NGO-RH-INT	No	No	Yes	
695	1.045-14NGO-LH-INT	No	No	Yes	
701	1.103-14NGO-RH-EXT	No	No	Yes	
702	1.125-14NGO-RH-INT	No	No	Yes	
703	1.125-14NGO-LH-INT	No	No	Yes	
705	1.125-14UNS-2A-RH-EXT	No	Yes	Yes	
750	1.125-14UNS-2A-LH-EXT (Long Nipple)	No	Yes	Yes	Alternate standard.
755	1.125-14UNS-2A-LH-EXT (Short Nipple)	No	Yes	Yes	Alternate standard.
792	1.500-12UNF-2A-RH-EXT	No	Yes	Yes	
795	1.500-12UNF-2A-LH-EXT	No	Yes	Yes	
800	3/8-18NGT-RH-INT (Yoke)	Yes	Yes	Yes	
820	1.030-14NGO-RH-EXT (Yoke) (Washer on outer face)	Yes	Yes	Yes	
840	1.030-14NGO-RH-EXT (Yoke) (Washer on inside of recess)	Yes	Yes	No	Eliminated by CGA in in 1987. Use 820 or 660 (limited).
845	1.125-14UNS-2A-RH-EXT (Yoke)	No	Yes	Yes	
850*	Yoke Connection for Air	No	Yes	Yes	
855*	Yoke Connection for Air	No	No	Yes	Alternate standard. Formerly 1310.

Downloaded from http://www.everyspec.com

Valve Outlet Connection Number	Thread	NBS H28 (1966)	CGA V-1 1977	ANSI/ CSA/ CGA V-1 1987	Remarks
860*	Basic dimensional drawing for pin-indexed yoke connections for medical gases.	No	Yes	Yes	Contains basic dimensions for Connections 870 through 973.
870*	Pin-indexed yoke for medical gases, Pins 2-5	Yes	Yes	Yes	
880*	Pin-indexed yoke for medical gases, Pins 2-6	Yes	Yes	Yes	
890*	Pin-indexed yoke for medical gases, Pins 2-4	Yes	Yes	Yes	
900*	Pin-indexed yoke for medical gases, Pins 1-3	Yes	Yes	Yes	
910*	Pin-indexed yoke for medical gases, Pins 3-5	Yes	Yes	Yes	
920*	Pin-indexed yoke for medical gases, Pins 3-6	Yes	Yes	Yes	
930*	Pin-indexed yoke for medical gases, Pins 4-6	Yes	Yes	Yes	
940*	Pin-indexed yoke for medical gases, Pins 1-6	Yes	Yes	Yes	
950*	Pin-indexed yoke for medical gases, Pins 1-5	No	Yes	Yes	

Downloaded from http://www.everyspec.com

Valve Outlet Connection Number	Thread	NBS H28 (1966)	CGA V-1 1977	ANSI/ CSA/ CGA V-1 1987	Remarks
960*	Pin-indexed yoke for medical gases, Pins 1-4	No	Yes	Yes	
965*	Pin-indexed yoke for medical gases, Single Pin No. 7	No	Yes	Yes	
973*	Pin-indexed yoke, Pins 11-24	No	No	Yes	

* Non threaded connection

Downloaded from http://www.everyspec.com

TABLE IX.2 - Inlet connecting threads

Valve Outlet Connection Series	Thread	NBS H28 (1966)	CGA V-1 1977	ANSI/ CSA/ CGA V-1 1987	Remarks
NGT	National Gas Taper Thread Series	Yes	Yes	Yes	
SGT	Special Gas Taper Thread Series	Yes	Yes	Yes	
NGS	National Gas Straight Thread Series	Yes	Yes	Yes	

Downloaded from http://www.everyspec.com

Downloaded from http://www.everyspec.com

3. Definitions. Screw thread terms applicable to this standard are defined in FED-STD-H28/1 and as noted in this document. Exceptions are for taper threads where non-standard symbols have been used. These are defined in Figure 9.3.

4. General requirements.

4.1 Outlet connections. Valve outlet connections and their threads are listed in Table IX.1. Connections are detailed in ANSI/CSA/CGA Standard V-1. Thread requirements appear in subsection 5.1.

4.1.1 The threads on the outlets are separated into four basic divisions-internal and external (INT and EXT), as well as right-hand and left-hand (RH and LH). Within each of the four divisions, further separation is made by varying the pitch and diameter of the threads. The diameters within each division are so spaced that adjoining sizes either will not enter or will not engage.

4.1.2 As far as practicable, the design of connections and assignment of the connections to gases has been made so as to prevent the interchange of connections which may result in a hazard. With the exception of outlets having taper pipe threads which seal at the threads, each outlet provides for screw threads which do not seal but merely hold the nipple against its seat. These screw threads have the Unified form but are not in the regular series.

4.1.3 Past practice has firmly established many outlet connections for specific gases or groups of gases and in many cases these connections were retained. Small differences in the threads and other elements of the same connection were reconciled into one form and size, properly recorded and defined. By adhering to existing outlets where practicable, it was possible to put the new standard system into effect without the inconvenience and expense of a cumbersome and costly changeover. Alternate and co-standards have been established for some gases.

4.1.4 Keeping the established practice in mind when classifying and assigning the gases to their outlets, an effort was made to follow a plan whereby right-hand threads would be used for non-fuel gases and for water-pumped gases, whereas left-hand threads would be used for fuel gases and for oil-pumped gases. These left-hand threads are identified by a groove on the hexagon nut. An external thread is used on the valve in most cases, but some important groups of gases have an internal thread on the valve.

Downloaded from http://www.everyspec.com

4.1.5 In the standardization of compressed gas valve outlet connections, more than one outlet is provided for some gases. To provide interchangeability of equipment for the same gas, adapters may be required. See ANSI/CSA/CGA Standard V-1.

4.1.6 The maximum radius of any part of the valve from its centerline has been specified to insure clearance for the smallest (3 1/8-in.) standard cylinder valve protecting cap.

4.2 Inlet connections. Valve inlet connection thread series are listed in Table IX.2. Thread requirements for these series appear in subsection 5.2. Other general information appears in ANSI/CSA/CGA Standard V-1.

4.3 Safety device threads. The safety devices on high pressure gas cylinder valves are provided with right hand threads of the Unified form, 19 threads per inch. Thread requirements appear in subsection 5.3.

5. Detailed requirements.

5.1 Outlet connection threads. Thread requirements for valve outlet connections are listed in Table IX.3. Unless otherwise specified, references are to this standard.

TABLE IX.3 - Outlet connection thread requirements

Thread Series	Designation and design	Limits of size	Gages and Gaging
NGO	Subsection 5.1.1	Table IX.4	FED-STD-H28/6, FED-STD-H28/20
NGT	Subsection 5.2.1	Table IX.5	Subsection 5.2.5
UNF, UNEF, UNS	FED-STD-H28/2	FED-STD-H28/2	FED-STD-H28/6, FED-STD-H28/20

Downloaded from http://www.everyspec.com

5.1.1 National Gas Outlet (NGO) threads.

5.1.1.1 Designation. NGO Series threads are identified by the major diameter size (maximum for external and minimum for internal threads) a dash, the number of threads per inch, NGO, a dash, thread direction (RH for right hand or LH for left hand, a dash, and either EXT for an external or INT for an internal thread.

Example: .825-14NGO-RH-EXT

5.1.1.2 Design. The NGO thread is based upon the obsolete Class 3 American National form thread. See Figures 9.1 and 9.2 for design profiles. For the NGO thread an allowance (minimum clearance) of from 0.0020 to 0.0050 in. between the mating parts is established to provide the desired looseness of fit at the threads, and to assure interchangeability between products of different manufacturers. The tolerances are in the direction of greater looseness and are determined on the basis of NS-3 data, except for the major diameter of the external threads for which the tolerance is limited to 0.0050 in. instead of 0.0098 in. Table IX.4 lists the calculation formulas used for determining size limits of thread characteristics. Table IX.5 provides numerical values to be used in these formulas as a function of number of threads per inch (tpi).

5.1.1.3 Size limits. Size limits for standard NGO series threads appear in Table IX.6.

Downloaded from http://www.everyspec.com

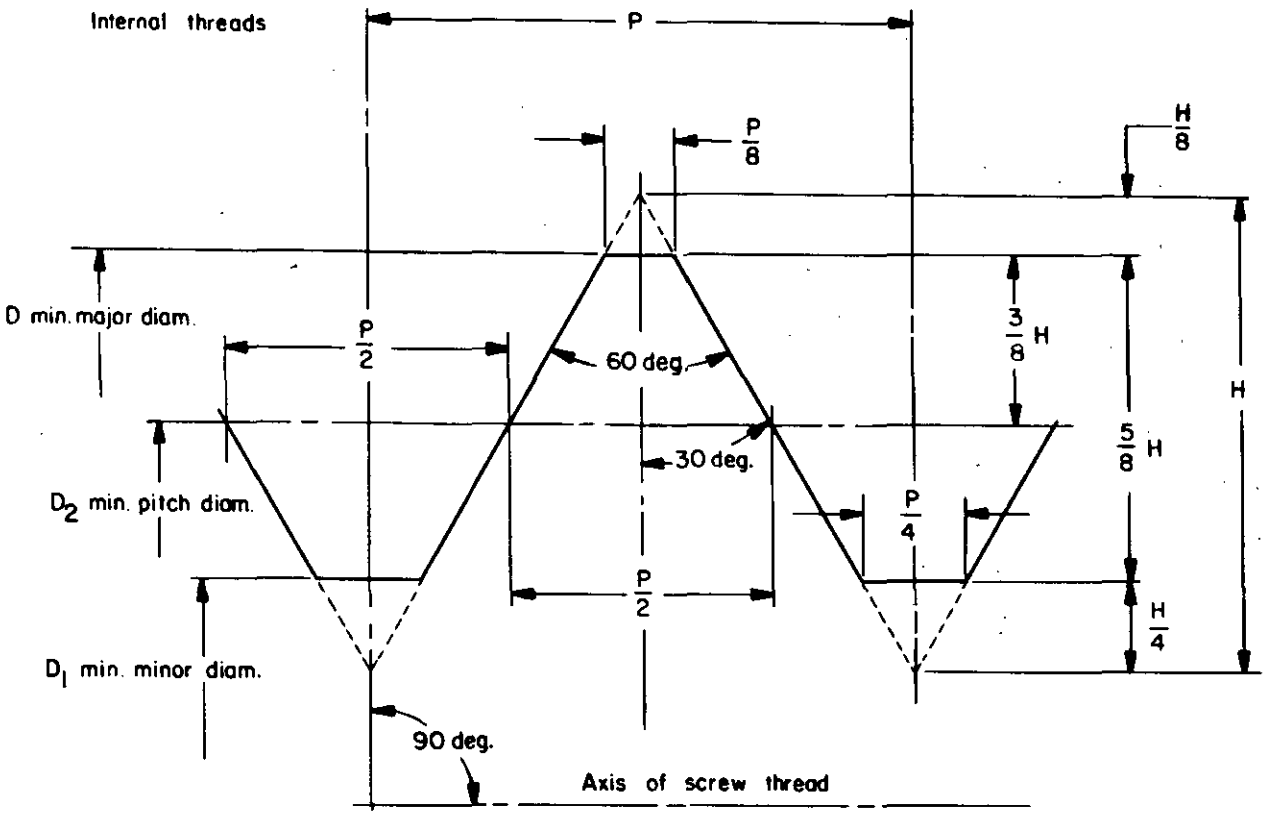

$$H = \frac{\sqrt{3}}{2} \times P = 0.866\ 025P$$

$$H/8 = 0.125H = 0.108\ 253P$$
$$H/4 = 0.250H = 0.216\ 506P$$
$$3H/8 = 0.375H = 0.324\ 760P$$
$$5H/8 = 0.625H = 0.541\ 266P$$

FIGURE 9.1 - NGO internal thread design profile (maximum material condition)

Downloaded from http://www.everyspec.com

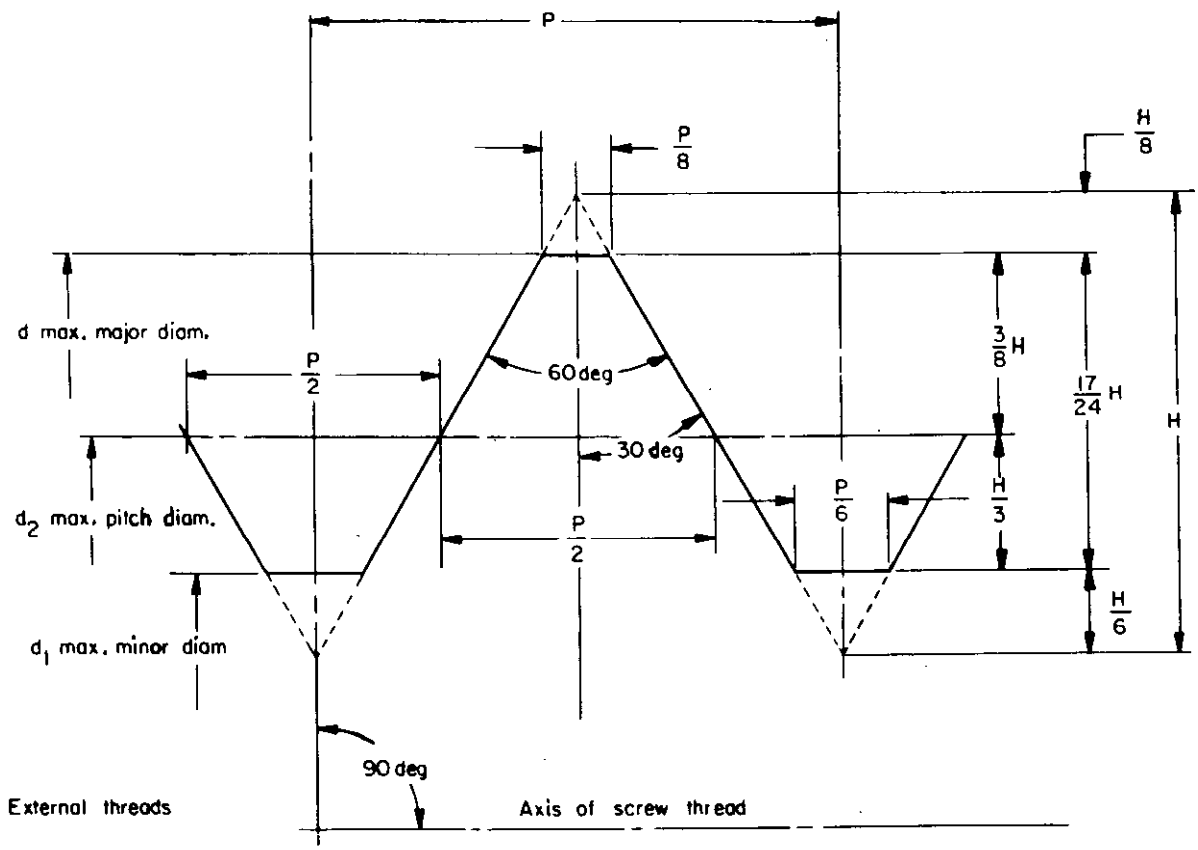

$$H = \frac{\sqrt{3}}{2} \times P = 0.866\ 025P$$

H/8 = 0.125 000H = 0.108 253P
H/6 = 0.166 667H = 0.144 338P
H/3 = 0.333 333H = 0.288 675P
3H/8 = 0.375 000H = 0.324 760P
17H/24= 0.708 333H = 0.613 435P

FIGURE 9.2 - NGO external thread design profile (maximum material condition)

Downloaded from http://www.everyspec.com

TABLE IX.4 - NGO thread size calculation formulas

External thread

Major diameter
$$\begin{cases} d\ max = d\ nom \\ d\ min = d\ max - 0.0050^{*} \end{cases}$$

Pitch diameter
$$\begin{cases} d_2 max = d\ nom - 0.64952P \\ d_2 min = d_2 max - Td_2 \end{cases}$$

Minor diameter, $d_1 max = d\ nom - 1.22687P$

Internal thread

Minor diameter
$$\begin{cases} D_1 min = D\ nom - 1.08253P \\ D_1 max = D_1 min + TD_1 \end{cases}$$

Pitch diameter
$$\begin{cases} D_2 min = D\ nom - 0.64952P \\ D_2 max = D_2 min + TD_2 \end{cases}$$

Major diameter, $D\ min = D\ nom$

* NGO only. Does not agree with NS-3 thread.

TABLE IX.5 - Data for calculation of NGO thread sizes

Threads per inch	h 0.64952P	1.66667h 1.08253P	1.88889h 1.22687P	Internal thread minor diameter tolerance TD_1	External and internal thread pitch diameter tolerances Td_2 and TD_2 For nominal major diameter ranges						
					Through 0.250	Above 0.250 To 0.375	Above 0.375 To 0.500	Above 0.500 To 0.750	Above 0.750 To 1.000	Above 1.000 To 1.500	Above 1.500 To 2.000
28	0.0232	0.0387	0.0438	0.0039	0.0022	0.0024	0.0026	0.0030	0.0036	0.0040	--
24	.0271	.0451	.0511	.0045	.0024	.0024	.0026	.0030	.0036	.0040	0.0059
20	.0325	.0541	.0613	.0054	.0026	.0026	.0026	.0030	.0036	.0040	.0060
18	.0361	.0601	.0682	.0060	--	.0030	.0030	.0030	.0036	.0040	.0060
16	.0406	.0677	.0767	.0068	--	--	.0032	.0032	.0036	.0040	.0061
14	.0464	.0773	.0876	.0077	--	--	.0036	.0036	.0036	.0040	.0062
12	.0541	.0902	.1022	.0090	--	--	--	.0040	.0040	.0040	.0063

NOTE: Data is in inches

Downloaded from http://www.everyspec.com

TABLE IX.6 - Limits of size of U.S. compressed gas cylinder valve outlet threads, NGO

Thread designation	External thread					Internal thread				
	Major diameter		Pitch diameter		Minor diameter	Minor diameter		Pitch Meter		Major diameter
	Max	Min	Max	Min	Max	Min	Max	Min	Max	Min
1	2	3	4	5	6	7	8	9	10	11
	in.	in.	in.	in.	in.	in.		in.	in.	in.
.373-24NGO-RH-EXT..	0.3730	0.3680	0.3459	0.3435	0.3219	.....	.....	.....	.....	.....
.375-24NGO-RH-INT..	.....	.....	.....	.....	.....	0.3299	0.3344	0.3479	0.3503	0.3750
.625-20NGO-RH-EXT..	.6250	.6200	.5925	.5895	.5637	.....	.....	.....	.....	.....
.628-20NGO-RH-INT..	.....	.....	.....	.....	.....	.5739	.5793	.5955	.5985	.6280
.745-14NGO{-RH/-LH}-EXT··	.7450	.7400	.6986	.6950	.6574	.....	.....	.....	.....	.....
.750-14NGO{-RH/-LH}-INT··	.....	.....	.....	.....	.....	.6727	.6804	.7036	.7072	.7500
.825-14NGO{-RH/-LH}-EXT··	.8250	.8200	.7786	.7750	.7374	.....	.....	.....	.....	.....
.830-14NGO{-RH/-LH}INT·	.....	.....	.....	.....	.....	.7527	.7604	.7836	.7872	.8300
.880-14NGO{-RH/-LH}-EXT··	.8800	.8750	.8336	.8300	.7924	.....	.....	.....	.....	.....
.885-14NGO{-RH/-LH}-INT··	.....	.....	.....	.....	.....	.8077	.8154	.8386	.8422	.8850
.895-18NGO{-RH/-LH}-EXT··	.8950	.8900	.8589	.8553	.8268	.....	.....	.....	.....	.....
.899-18NGO{-RH/-LH}-INT··	.....	.....	.....	.....	.....	.8389	.8449	.8629	.8665	.8990
.903-14NGO{-RH/-LH}-EXT··	.9030	.8980	.8566	.8530	.8154	.....	.....	.....	.....	.....
.908-14NGO{-RH/-LH}-INT··	.....	.....	.....	.....	.....	.8307	.8384	.8616	.8652	.9080
.960-14NGO{-RH/-LH}-EXT	.9600	.9550	.9136	.9100	.8724	.....	.....	.....	.....	.....
.965-14NGO{-RH/-LH}-INT··	.....	.....	.....	.....	.....	.8877	.8954	.9186	.9222	.9650
1.030-14NGO{-RH/-LH}-EXT··	1.0300	1.0250	.9836	.9796	.9424	.....	.....	.....	.....	.....
1.035-14NGO{-RH/-LH}-INT··	.....	.....	.....	.....	.....	.9577	.9654	.9886	.9926	1.0350
1.040-14NGO{-RH/-LH}-EXT··	1.0400	1.0350	.9936	.9896	.9524	.....	.....	.....	.....	.....
1.045-14NGO{-RH/-LH}-INT··	.....	.....	.....	.....	.....	.9677	.9754	.9986	1.0026	1.0450
1.103-14NGO{-RH/-LH}-EXT··	1.1030	1.0980	1.0566	1.0526	1.0154	.....	.....	.....	.....	.....
1.108-14NGO{-RH/-LH}INT··	.....	.....	.....	.....	.....	1.0307	1.0384	1.0616	1.0656	1.1080
1.120-14NGO{-RH/-LH}EXT	1.1200	1.1150	1.0736	1.0696	1.0324	.....	.....	.....	.....	.....
1.125-14NGO{-RH/-LH}INT··	.....	.....	.....	.....	.....	1.0477	1.0554	1.0786	1.0826	1.1250

Downloaded from http://www.everyspec.com

Downloaded from http://www.everyspec.com

5.2 Inlet connection threads. The threads on the inlet, neck, or valve to cylinder connection are right hand of the following types:

(a) National Gas Taper threads, NGT - See 5.2.1
(b) National Gas Taper threads for chlorine, NGT(Cl) - See 5.2.2
(c) Special Gas Taper threads, SGT -See 5.2.3
(d) National Gas Straight threads, NGS - See 5.2.4

5.2.1 National Gas Taper (NGT) threads.

5.2.1.1 Designation. NGT threads are identified by the nominal pipe size, a dash, number of threads per inch and NGT.

Example: $\frac{1}{2}$ - 14NGT

5.2.1.2 Design. The NGT threads are based upon the American National taper pipe threads, NPT, but are longer in order to provide more threads if further tightening is required. Threads are tapered 1 in 16 or 3/4 inch per foot measured on the diameter along the axis. Taper tolerance for external threads is minus one turn but no plus turns. For internal threads, taper tolerance is plus one turn but no minus turns. Limits on crest and root truncation are the same as NPT and except for the 1/8 and 1/4 sizes, hand tight engagement lengths, L_1, are the same . NPT threads are covered in FED-STD-H28/7.

5.2.1.3 Size limits. Size limits for standard NGT threads are included in Table IX.7

5.2.1.4 Gages and gaging. See 5.2.5.

5.2.2 National Gas Taper threads for chlorine (NGT(Cl)).

5.2.2.1 Designation. NGT(Cl) threads are identified by the nominal pipe size, a dash, number of threads per inch, NGT(Cl), a dash and a numeral which corresponds to a degree of oversize as specified in Table IX.7 footnote a.

Example: $\frac{3}{4}$ - 14NGT(Cl) -2

5.2.2.2 Design. NGT(Cl) threads are standard 3/4 - 14NGT threads except additional threads are provided for further tightening. Several degrees of oversize external threads are also included in this standard and are identified as -2, -3, etc.

5.2.2.3 Size limits. Size limits for standard NGT(Cl) threads are included in Table IX.7.

5.2.2.4 Gages and gaging. See 5.2.5.

TABLE IX.7 - Limits of size of National Gas Taper and Special Gas Taper threads: NGT, NGT(Cl), SGT

Thread designation [a]	Hand-tight engagement,[c] L_1	External						
		Small end			Full threads		Large end	
		Major diameter, D_0	Pitch diameter, E_0	Chamfer-45° x min. diameter	Pitch diameter, E_8	Length[d] L_8	Major diameter, approx., D_{10}	Over-all length approx L_{10}
1	2	3	4	5	6	7	8	9
	in.	in.	in.	in.	in.	in.	in.	in.
1/8-27NGT....	0.1800	0.3931	0.3635	21/64	0.3886	0.4022	0.4204	7/16
1/4-18NGT....	.2000	.5218	.4774	27/64	.5107	.5333	.5530	5/8
3/8-18NGT....	.2400	.6564	.6120	9/16	.6479	.5733	.6915	11/16
1/2-14NGT.....	.3200	.8156	.7584	11/16	.8052	.7486	.8625	13/16
3/4-14NGT.....	.3390	1.0248	.9677	29/32	1.0157	.7676	1.0795	7/8
3/4-14NGT (Cl)-1	.3390	1.0248	.9677	29/32	1.0268	.9461	1.0951	1 1/8
3/4-14NGT (Cl)-2	.3390	1.0427	.9856	59/64	1.0447	.9461	1.1130	1 1/8
3/4-14NGT (Cl)-3	.3390	1.0628	1.0057	15/16	1.0648	.9461	1.1331	1 1/8
3/4-14NGT (Cl)-4	.3390	1.0873	1.0302	31/32	1.0893	.9461	1.1576	1 1/8
3/4-14NGT (Cl)-5	.3390	1.1498	1.0927	1 1/32	1.1518	.9461	1.2201	1 1/8
3/4-14SGT [b]....	.4008	1.047	0.9852	59/64	1.0731	.7030	1.1564	7/8
1-11 1/2NGT.....	.4000	1.2832	1.2136	1 1/8	1.2712	.9217	1.3457	1
1 1/4-11 1/2NGT....	.4200	1.6267	1.5571	1 15/32	1.6160	.9417	1.6931	1 1/16
1 1/2-11 1/2NGT....	.4200	1.8657	1.7961	1 45/64	1.8550	.9417	1.9360	1 1/8

All dimensions are basic. See figure 9.3 for relationship of dimensions.

[a] For uses other than chlorine, oversize threads for revalving are generally specified at 4 or 7 turns oversize. For chlorine, the 3/4-14NGT(Cl)-1 size is not oversize; the -2 is 4 turns oversize; the -3 is 8 1/3 turns oversize; the -4 is 14 turns oversize; and the -5 is 28 turns oversize.

[b] The 3/4-14SGT (Special Gas Taper) thread is a standard having a taper of 1/8 (=1 1/2 inches per foot on diameter) with a 60° thread normal to the axis and 0.0618 inch deep. For this thread col. 13,14 and 15 are based on gages 0.7030 inch long. Cylinders are held to final inspection limits from basic to 1 1/2 turns small, and valves to plus or minus 1 turn.

[c] The basic condition of fit is that the external thread with a pitch diameter of E_0 at the end (reference plane for gaging external thread) shall enter by hand engagement to a distance L_1 into the internal thread with a pitch diameter of E_1 at the opening (reference plane for gaging internal thread).

[d] See page 21.

Downloaded from http://www.everyspec.com

TABLE IX.7 Continued - Limits of size of National Gas Taper and Special Gas Taper threads: NGT, NGT(Cl), SGT

Internal							Thread designation [a]
Neck radius, min, G	Pitch diameter at face, E_1	C'sink 90° x max diameter	Bore, max., K_3	Pitch diameter, K_3	Full threads: Length, (L_1+ L_3)	Full threads: Length of full root, min.,[e] L_9	
10	11	12	13	14	15	16	1
in.	in.	in.	in.	in.	in.	in.	
9/32	0.3748	13/32	0.3269	0.3566	0.2911	0.3652	1/8-27NGT
3/8	.4899	9/16	.4225	.4670	.3667	.4778	1/4-18NGT
7/16	.6270	11/16	.5572	.6016	.4067	.5178	3/8-14NGT
9/16	.7784	7/8	.6879	.7450	.5343	.6771	1/2-14NGT
11/16	.9889	1 1/16	.8972	.9543	.5533	.6961	3/4-14NGT
11/16	.9889	1 1/16	.8972	.9543	.5533	.9461	3/4-NGT (Cl)-1
(*)	(*)	(*)	(*)	(*)	(*)	(*)	3/4-NGT (Cl)-2
(*)	(*)	(*)	(*)	(*)	(*)	(*)	3/4-NGT (Cl)-3
(*)	(*)	(*)	(*)	(*)	(*)	(*)	3/4-NGT (Cl)-4
(*)	(*)	(*)	(*)	(*)	(*)	(*)	3/4-NGT (Cl)-5
11/16	1.0353	1 7/64	.8556	.9474	.5714	.7030	3/4-14SGT [b]
13/16	1.2386	1 5/16	1.1278	1.1973	.6609	.8348	1-11 1/2NGT
1	1.5834	1 43/64	1.4713	1.5408	.6809	.8548	1 1/4-11 1/2NGT
1 5/32	1.8223	1 29/32	1.7102	1.7798	.6809	.8548	1 1/2-11 1/2NGT

[d] External threads shall be threaded the approximate length L_{10} but gaged up to L_8. Dimensions L_8 is equal to L_1 plus six (6) threads for NGT threads and L_1 plus eight and a half (8 1/2) threads for the NGT (Cl) threads. Dimension E_8 is measured at distance L_8 from E_8, and dimension D_{10} is measured at distance L_{10} from E_9. These longer external threads are desirable if further tightneing shouuld be necessary. To facilitate gaging, provision should be made to allow the L_8 ring gage to advance a distance of two full threads beyond the L_8 length (one turn for allowable variation in pitch diameter and one turn for allowable variation in taper).

[e] Full internal threads at the crests and roots shall extend throughout lengths L_1+ L_3 (L_3=3 threads) for NGT and NGT(Cl). This dimension determines the minimum metal on the inside of the neck to produce maximum bore K_3. Any metal below L_3 shall have tapped threads with full roots to minimum length L_9 (L_1 + 5 threads for NGT threads and L_1 + 8 1/2 threads for the NGT(Cl) threads).

*Not applicable

Downloaded from http://www.everyspec.com

Downloaded from http://www.everyspec.com

5.2.3 Special Gas Taper (SGT) threads.

5.2.3.1 Designation. SGT threads are identified by the nominal pipe size, a dash, number of threads per inch and SGT.

Example: $\frac{3}{4}$ - 14SGT

5.2.3.2 Design. The SGT threads are similar to the NGT except nominal taper is 1 in 8 or 1 1/2 inches per foot measured on the diameter along the axis.

5.2.3.3 Size limits. Size limits for the standard SGT thread are included in table IX.7.

5.2.3.4 Gages and gaging. See 5.2.5.

5.2.4 National Gas Straight (NGS) threads.

5.2.4.1 Designation. NGS threads are identified by the nominal pipe size, a dash, number of threads per inch and NGS.

Example: $\frac{3}{4}$ - 14NGS

5.2.4.2 Design. The diameters and form for both the external and internal threads shall conform to those for NPSM, American National Standard straight pipe threads for free-fitting mechanical joints in accordance with FED-STD-H28/7. Length of engagement shall be $L_1 + L_3$ as tabulated for the equivalent NGT size in table IX.7. The seal for tightness shall be at or close to the end face of the cylinder whether it incorporates the external or the internal threads.

5.2.4.3 Size limits. See FED-STD-H28/7.

5.2.4.4 Gages and gaging. See FED-STD-H28/7 for straight thread gage requirements.

Downloaded from http://www.everyspec.com

5.2.5 Gages and gaging for NGT, NGT(Cl) and SGT threads. Special gages are required for the gaging of these threads because of their length and the rigid requirements for sealing the compressed gas against leakage. The working or inspection gages described in this section are called ramp gages. Ramp gages are similar to conventional taper pipe thread gages but provide more positive control of the thread elements; however, other gages acceptable to the procuring agency may be used. Sketches of the master gages for setting and checking are shown in figures 9.4, 9.5 and 9.6. Gaging information is given in the notes on these figures. Gage data appears in tables IX.8, IX.9 and IX.10. Operation, setting and checking of the gages is covered in subparagraphs 5.2.6 through 5.2.12.

5.2.6 Gaging of external thread pitch diameter.

5.2.6.1 Gage operation. To check the pitch diameter of the external thread, the threaded ring gages shown in figure 9.7 are used. The L_1 ring gage is known as a primary gage since the reading taken on the ramp will be needed for use when additonal gaging is done.

a. The L_8 ring is screwed onto the valve, flat face first. The L_1 ring, which is mounted on its ramp gage, is then screwed onto the valve. Both rings should be engaged to about the same tightness. For the thread to be acceptable, the rim of the L_8 ring should not project above the L_1 ring or below the bottom of the gaging notch on the L_1 ring.

b. The numbers on the ramp ring indicate the quarters of a turn the thread varies from basic. While the L_1 and L_8 rings are screwed onto the valve, the plunger should be pushed down against the end of the valve. The reading on the ramp should then be taken. The reading will be the number within the division where the helical scale or ramp intersects the edge of the collar on the body.

c. The threads are to be within one turn in either direction from basic but preferably within 1/2 turn from basic. Therefore the product should gage preferably between -2 and +2 on the scale with reading between-4 and +4 being acceptable. This reading will be needed as a reference for gaging the crest and root truncations of the external thread.

Downloaded from http://www.everyspec.com

5.2.6.2 Gage setting and checking.

a. Periodically, the L_8 ring and the L_1 ring are screwed on the master setting plug of figure 9.4. The tops of both rings and the witness lines should align. If the witness lines at finger-tight position vary by more than 1/16 turn (22 1/2 degrees), the witness line on the L_8 ring should be relocated. Maximum wear allowance from true basic is 1/2 turn at which point the gaging elements should be reconditioned or replaced. Gage crest truncations can be checked with the master setting plug of figure 9.6 but are not subject to wear.

b. The ramp scale is set to zero with the master setting plug of figure 9.4 used instead of the product being checked.

5.2.7 Gaging of external thread crest truncation.

5.2.7.1 Gage operation. To check the crest truncation of the external thread, the gage shown in figure 9.8 is used. The gage should be placed over the threads lightly and rocked in different directions to detect out-of-roundness or off-taper. If the rock is not excessive, the plunger should be pushed down and a reading taken. If the edge of the collar on the body lies within the helical ramp zone at the same reading as was shown on the ramp of the pitch diameter ring gage (fig. 9.7), the crest truncation of the external thread is acceptable.

5.2.7.2 Gage setting. The ramp scale is set at the top of the tolerance band at the zero ramp position using the master setting plug of figure 9.5.

5.2.8 Gaging of external thread root truncation.

5.2.8.1 Gage operation.

a. To check the root truncation of the external thread, the gage shown in figure 9.9 is used. The gage is screwed delicately onto the valve. After reaching full engagement, the gage is backed off one-half to one full turn, and the degree of looseness is compared with that of generally accepted threads. Slight looseness indicates that the gage and product bear along the length of a full and continuous or cleared thread. Considerable looseness indicates that the gage has seated or stopped on the last incomplete thread.

b. If the thread appears to be satisfactory after the above preliminary check, the gage is screwed onto the valve fingertight. The plunger is then pushed down and a reading taken. If the edge of the collar on the body lies within the helical ramp zone of the pitch diameter ring gage (fig 9.7), the root truncation of the external thread is acceptable.

Downloaded from http://www.everyspec.com

5.2.8.2 Gage setting. The ramp scale is set at the bottom of the tolerance band at the zero ramp position using the master setting plug of figure 9.6.

5.2.9 Gaging of internal thread pitch diameter.

5.2.9.1 Gage operation. To check the pitch diameter of the internal thread, the threaded plug gage shown in figure 9.10 is used. This gage is known as a primary gage since the reading taken on the ramp will be needed for use when additional gaging is done.

a. Both heads are screwed in simultaneously, with the precaution that the L_9 section advances with some clearance ahead of the L_1 section to prevent locking. Both sections should be screwed in to about the same tightness. For the pitch diameter taper of the tapped hole to be acceptable, the upper band should not be above or below the edge of the lock sleeve.

b. To measure the effective pitch diameter of the thread at the L_1 length, with the gage screwed into the cylinder, the hexagonal sleeve is pushed down to the face of the cylinder. A reading is then taken on the ramp at the point where it intersects the edge of the hexagonal sleeve.

c. The threads are to be within one turn in either direction from basic but preferably within 1/2 turn from basic. Therefore the product should gage preferably between -2 and +2 on the scale, with readings between -4 and +4 being acceptable. This reading will be needed as a reference for gaging the crest and root truncations and the maximum bore of the internal thread on the cylinder.

5.2.9.2 Gage setting and checking.

a. To set the ramp scale, the precedure of 5.2.9.1a is followed with the master setting ring of figure 9.4 used in place of the product. The ramp scale is set to zero.

b. After the L_1 plug ramp scale is set in "a" above, the depth scale for the L_9 plug is rotated so that the witness lines are aligned at the upper edge of the tolerance band. If the top edge of the band does not coincide exactly with the edge of the lock sleeve when both witness lines are aligned, it is evident that one of the plug sections has worn more than the other. This discrepancy does not affect the gaging accuracy. The witness lines are not relocated but their relative position is noted. Gage crest truncation checks require disassembly and use of the master setting ring of figure 9.5 but the crests of the pitch diameter gages are not subject to wear.

Downloaded from http://www.everyspec.com

5.2.10 Gaging of internal thread crest truncation.

5.2.10.1 Gaging operation. To check the crest truncation of the internal thread, the plain plug gage shown in figure 9.11 is used.

a. The plug is slipped lightly into the hole and rocked in different directions to detect out-of-roundness or off-taper. If either of these conditions appears excessive, the crest should be examined visually for roughness, chips, and variations in truncation.

b. After this inspection, the plug is seated into the hole and the hexagonal sleeve pushed down to the face of the cylinder. If the upper edge of the hexagonal sleeve lies within the helical ramp zone at the same reading as was shown on the ramp of the pitch diameter plug gage (fig. 9.10), the crest truncation of the internal thread is acceptable.

5.2.10.2 Gage setting. The ramp scale is set at the bottom of the tolerance band at the zero ramp position using the master setting ring of figure 9.6.

5.2.11 Gaging of internal thread maximum bore. To check that the thread crests beyond the depth of L_1 and L_3 do not exceed the maximum bore, K_3, the gage shown in figure 9.12 is used.

5.2.11.1 Gage operation. The plug is seated into the hole and the hexagonal sleeve pushed down to the face of the cylinder. If the upper edge of the hexagonal sleeve lies within the helical ramp zone at the same reading as was shown on the ramp of the pitch diameter plug gage (fig. 9.10), the maximum bore of the internal thread is acceptable.

5.2.11.2 Gage setting. The ramp scale is set at the bottom of the tolerance band at the zero ramp position using the master setting ring of figure 9.6.

Downloaded from http://www.everyspec.com

5.2.12 Gaging of internal thread root truncation. To check the root truncation of the internal thread, the threaded plug gage shown in figure 9.13 is used.

a. The gage is screwed delicately into the tapped hole of the cylinder. After reaching full engagement, the gage is backed off one-half to one full turn and the degree of looseness compared with that of generally accepted threads. Slight looseness indicates that the gage and cylinder bear along the length of a full and continuous or cleared thread. Considerable looseness indicates that the plug has seated or stopped on the last incomplete thread.

b. If the thread appears to be satisfactory after the above preliminary check, the gage is screwed into the cylinder fingertight. The hexagonal sleeve is then pushed down to the face of the cylinder. If the upper edge of the hexagonal sleeve lies within the helical ramp at the same reading as was shown on the ramp of the pitch diameter plug gage (fig. 9.10), the root truncation of the internal thread is acceptable.

5.2.12.2 Gage setting. The ramp scale is set at the top of the tolerance band at the zero ramp position using the master setting ring of figure 9.5.

5.3 Safety device threads. The safety devices on high pressure gas cylinder valves are provided with right hand Unified threads with 19 threads per inch. Minimum length of engagement is 1/4 inch. Designations, which include limits of size, are as follows:

Boss (external thread)
0.6500-19UNS-3A
Major dia. 0.6500-0.6416
Pitch dia. 0.6157-0.6124
Minor dia. 0.5929 max.

Cap (internal thread)
0.6500-19UNS-3B
Minor dia. 0.5929-0.6008
Pitch dia. 0.6157-0.6200
Major dia. 0.6500 min.

A gaging system shall be specified in accordance with FED-STD-H28/20.

TABLE IX.8 - Data for gages for NGT, NGT(Cl) and SGT external threads

	1/8-27NGT	1/4-18NGT	3/8-18NGT	1/2-14NGT	3/4-14NGT	3/4-14NGT(Cl)-1	3/4-14NGT(Cl)-2	3/4-14NGT(Cl)-3	3/4-14NGT(Cl)-4	3/4-14NGT(Cl)-5	3/4-14SGT	1-11 1/2NGT	1 1/4-11 1/2NGT	1 1/2-11 1/2NGT
1	2	3	4	5	6	7	8	9	10	11	12	13	14	15
	in.	in.	in.	in.	in.	in.	in.	in.	in.	in.	in.	in.	in.	in.
D_0	0.3931	0.5218	0.6564	0.8156	1.0248	1.0248	1.0427	1.0628	1.0873	1.1498	1.0470	1.2832	1.6267	1.8657
D_1	.4044	.5343	.6714	.8356	1.0460	1.0460	1.0639	1.0840	1.1085	1.1710	1.0971	1.3082	1.6530	1.8920
$D_{(8-P)}$	.4160	.5517	.6888	.8579	1.0683	1.0795	1.0974	1.1175	1.1420	1.2045	1.1260	1.3354	1.6802	1.9192
D_{10}, approx	.4204	.5530	.6915	.8625	1.0795	1.0951	1.1130	1.1331	1.1576	1.2201	1.1564	1.3457	1.6931	1.9360
E_0	.3635	.4774	.6120	.7584	.9677	.9677	.9856	1.0057	1.0302	1.0927	.9852	1.2136	1.5571	1.7961
E_0-1/2 sharp V thd height	.3475	.4534	.5880	.7275	.9368	.9368	.9547	.9748	.9993	1.0618	.9543	1.1760	1.5195	1.7585
E_1	.3748	.4899	.6270	.7784	.9889	.9889	1.0068	1.0269	1.0514	1.1139	1.0353	1.2386	1.5834	1.8223
$E_{(1+P)}$	.3771	.4934	.6305	.7829	.9934	.9934	1.0113	1.0314	1.0559	1.1184	1.0443	1.2440	1.5888	1.8277
E_8	.3886	.5107	.6479	.8052	1.0157	1.0268	1.0447	1.0648	1.0893	1.1518	1.0731	1.2712	1.6160	1.8550
E_8-1/2 sharp V thd height	.3726	.4867	.6239	.7743	.9848	.9959	1.0138	1.0339	1.0584	1.1209	1.0422	1.2336	1.5784	1.8174
K_0	.3339	.4329	.5676	.7013	.9106	.9106	.9285	.9486	.9731	1.0356	.9234	1.1441	1.4876	1.7265
$K_{(8-P)}$	.3567	.4628	.6000	.7436	.9541	.9653	.9832	1.0033	1.0278	1.0903	1.0024	1.1963	1.5411	1.7800
L_1	.1800	.2000	.2400	.3200	.3390	.3390	.3390	.3390	.3390	.3390	.4008	.4000	.4200	.4200
L_8	.4022	.5333	.5733	.7486	.7676	.9461	.9461	.9461	.9461	.9461	.7030	.9217	.9417	.9417
$L_{(8-P)}$	.3652	.4777	.5177	.6772	.6962	.8747	.8747	.8747	.8747	.8747	.6316	.8347	.8547	.8547
L_{10}, approx	7/16	5/8	11/16	13/16	7/8	1 1/8	1 1/8	1 1//8	1 1/8	1 1/8	7/8	1	1 1/16	1 1/8
P, pitch	.03704	.05556	.05556	.07143	.07143	.07143	.07143	.07143	.07143	.07143	.07143	.08696	.08696	.08696
Chamfer 45° x min. dia	21/64	27/64	9/16	11/16	29/32	29/32	59/64	15/16	31/32	1 1/32	59/64	1 1/8	1 15/32	1 45/64
H, ref	.2544	.3824	.3824	.4912	.4912	.6688	.6688	.6688	.6688	.6688	.3184	.5968	.5968	.5984
M, ref	.6196	.8601	.9001	1.1684	1.1874	1.5435	1.5435	1.5435	1.5435	1.5435	.9500	1.4315	1.4515	1.4531

See figure 9.3 for the explanation of all letter symbols except H and M, which are identified on figure 9.6.

Downloaded from http://www.everyspec.com

TABLE IX.9 - Data for gages for NGT, NGT(C1) and SGT internal threads

	1/8-27NGT	1/4-18NGT	3/8-18NGT	1/2-14NGT	3/4-14NGT	3/4-14NGT(C1)-1	3/4-14NGT(C1)-2	3/4-14NGT(C1)-3	3/4-14NGT(C1)-4	3/4-14NGT(C1)-5	3/4-14SGT	1-11 1/2NGT	1 1/4-11 1/2NGT	1 1/2-11 1/2NGT
1	2	3	4	5	6	7	8	9	10	11	12	13	14	15
	in.	in.	in.	in.	in.	in.	in.	in.	in.	in.	in.	in.	in.	in.
D_0	0.3931	0.5218	0.6564	0.8156	1.0248	1.0248	(*)	(*)	(*)	(*)	1.0470	1.2832	1.6267	1.8657
D_1	.4044	.5343	.6714	.8356	1.0460	1.0460	(*)	(*)	(*)	(*)	1.0971	1.3082	1.6530	1.8920
$D_{(8-P)}$	.4160	.5517	.6888	.8579	1.0683	1.0795	(*)	(*)	(*)	(*)	1.1260	1.3354	1.6802	1.9192
D_9	.3815	.5044	.6390	.7933	1.0025	.9869	(*)	(*)	(*)	(*)	1.0024	1.2560	1.5995	1.8385
E_0	.3635	.4774	.6120	.7584	.9677	.9677	(*)	(*)	(*)	(*)	.9852	1.2136	1.5571	1.7961
E_1	.3748	.4899	.6270	.7784	.9889	.9889	(*)	(*)	(*)	(*)	1.0353	1.2386	1.5834	1.8223
E_3	.3566	.4670	.6016	.7450	.9543	.9543	(*)	(*)	(*)	(*)	.9474	1.1973	1.5408	1.7798
E_9	.3520	.4601	.5947	.7361	.9454	.9298	(*)	(*)	(*)	(*)	.9295	1.1864	1.5299	1.7689
E_9+1/2 sharp V thd height	.3680	.4841	.6187	.7670	.9763	.9607	(*)	(*)	(*)	(*)	.9604	1.2240	1.5675	1.8065
$E_{(0+1\ 1/2P)}$	.3601	.4723	.6069	.7517	.9610	.9610	(*)	(*)	(*)	(*)	.9718	1.2054	1.5489	1.7879
K_1	.3451	.4454	.5826	.7213	.9318	.9318	(*)	(*)	(*)	(*)	.9325	1.1691	1.5139	1.7528
K_3	.3269	.4225	.5572	.6879	.8972	.8972	(*)	(*)	(*)	(*)	.8856	1.1278	1.4713	1.7102
K_9	.3223	.4156	.5503	.6790	.8883	.8727	(*)	(*)	(*)	(*)	.8377	1.1169	1.4604	1.6993
L_1	.1800	.2000	.2400	.3200	.3390	.3390	(*)	(*)	(*)	(*)	.4008	.4000	.4200	.4200
L_1+L_3	.2911	.3667	.4067	.5343	.5533	.5533	(*)	(*)	(*)	(*)	.7030	.6609	.6809	.6809
L_8	.4022	.5333	.5733	.7486	.7676	.9461	(*)	(*)	(*)	(*)	.7030	.9217	.9417	.9417
$L_{(8-P)}$	.3652	.4777	.5177	.6772	.6962	.8747	(*)	(*)	(*)	(*)	.6316	.8347	.8547	.8547
L_9	.3652	.4778	.5178	.6771	.6961	.9461	(*)	(*)	(*)	(*)	.7030	.8348	.8548	.8548
3 1/2P	.1296	.1944	.1944	.2500	.2500	.2500	(*)	(*)	(*)	(*)	.2500	.3043	.3043	.3043
1 1/2P	.0556	.0833	.0833	.1071	.1071	.1071	(*)	(*)	(*)	(*)	.1071	.1304	.1304	.1304
P, pitch	.03704	.05556	.05556	.07143	.07143	.07143	(*)	(*)	(*)	(*)	.07143	.08696	.08696	.08696
C'sink 90° x max. dia	13/32	9/16	11/16	7/8	1 1/16	1 1/16	(*)	(*)	(*)	(*)	1 7/64	1 5/16	1 43/64	1 29/32
G	9/32	3/8	7/16	9/16	11/16	11/16	(*)	(*)	(*)	(*)	11/16	13/16	1	1 5/32
A, ref	.5812	.8026	.8426	1.0979	1.1153	1.3653	(*)	(*)	(*)	(*)	1.0390	1.3468	1.3668	1.3668
B, ref	.2160	.3248	.3248	.4208	.4192	.4192	(*)	(*)	(*)	(*)	.3360	.5120	.5120	.5120

See figure 9.3 for the explanation of all letter symbols except A and B, which are identified on figure 9.5

*Not applicable.

Downloaded from http://www.everyspec.com

TABLE IX.10 - Master setting gage tolerances for NGT, NGT(Cl) and SGT

Thread designation	Tolerance on pitch diameter at gaging notch of plug gage	Tolerance [a] on lead in L_1 length of gage		Tolerance [b] on half angle		Tolerance [a] on taper in L_1 length of gage		Tolerance on major diameter of plug gage at gaging notch	Tolerance on minor diameter of ring gage at large end
		Plugs	Rings	Plugs	Rings	Plugs	Rings		
1	2	3	4	5	6	7	8	9	10
	in. ±	in. ±	in. ±	min. ±	min ±	in. +	in. −	in. −	in. +
1/8-27NGT.....	0.0002	0.0002	0.0003	15	20	0.0003	0.0006	0.0004	0.0004
1/4-18NGT.....	.0002	.0002	.0003	15	20	.0004	.0007	.0006	.0006
3/8-18NGT.....	.0002	.0002	.0003	15	20	.0004	.0007	.0006	.0006
1/2-14NGT.....	.0003	.0002	.0003	10	15	.0006	.0009	.0010	.0010
3/4-14NGT.....	.0003	.0002	.0003	10	15	.0006	.0009	.0010	.0010
3/4-14NGT(Cl)....	.0003	.0002	.0003	10	15	.0006	.0009	.0010	.0010
3/4-14SGT.....	.0003	.0002	.0003	10	15	.0006	.0009	.0010	.0010
1-11 1/2NGT....	.0003	.0003	.0004	10	15	.0008	.0012	.0010	.0010
1 1/4-11 1/2NGT..	.0003	.0003	.0004	10	15	.0008	.0012	.0010	.0010
1 1/2-11 1/2NGT..	.0003	.0003	.0004	10	15	.0008	.0012	.0010	.0010

[a] The lead and taper on plug and ring gages shall be measured along the pitch line, omitting the imperfect threads at each end.

Notes-Maximum possible interchange standoff, any ring against any plug other than its master plug, may occur when taper deviations are zero and all other dimensions are at opposite extreme tolerance limits.

Interchange standoff, any ring against any plug other than its master plug, may occur when all dimensions including taper are midway between opposite tolerance limits.

[b] In solving for the correction in diameter for angle variations, the average variation in half angle for the two sides of thread regardless of their signs should be taken.

The large end of the ring gage shall be flush with the gaging notch of its master plug gage within ±0.002 in. when assembled handtight.

The tolerance for the length L_1 from small end to gaging notch of the plug gage shall be +0.000, −0.001 in.

The tolerance for the overall thread length L_2 of the plug gage shall be +0.005, −0.000 in.

The tolerance for the thickness L_1 of the ring gage shall be +0.001, −0.000 in.

Downloaded from http://www.everyspec.com

Downloaded from http://www.everyspec.com

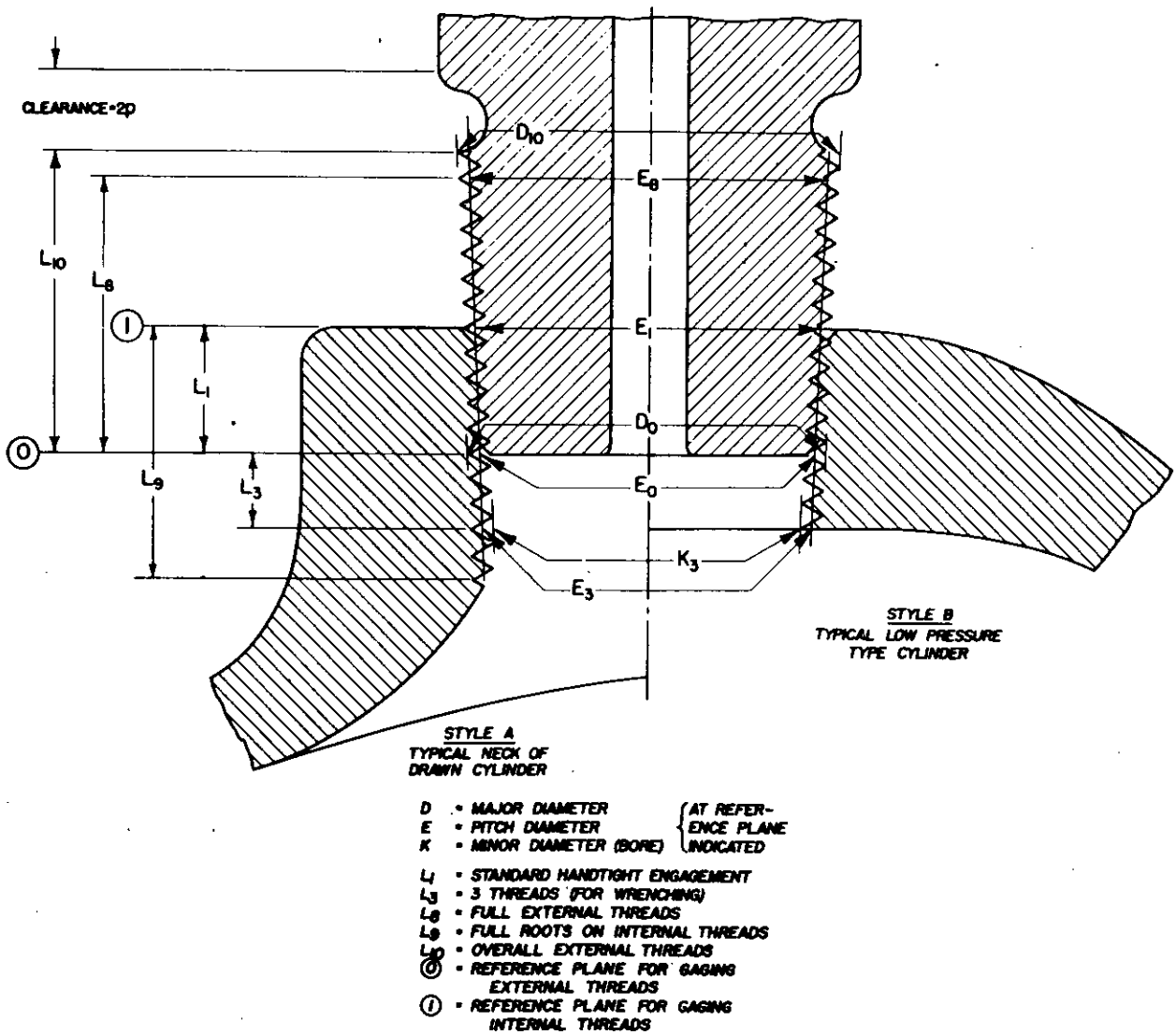

FIGURE 9.3 -Relationship between internal and external thread dimensions of NGT, NGT(Cl) and SGT threads.

Downloaded from http://www.everyspec.com

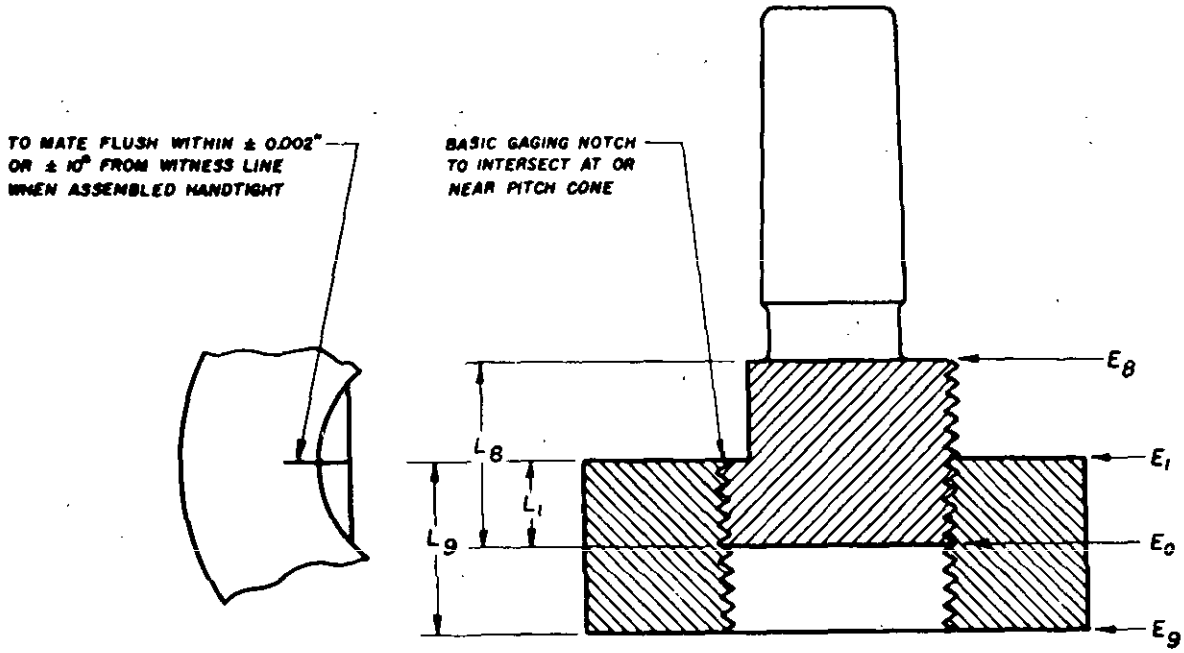

Roots of threads on plug and ring to be undercut to P/4 max to clear sharp V 60° thread.

Gages to be calibrated to allow for variations in flank angle, taper, lead, and pitch diameter. Maximum cumulative tolerance form true basic = 1/16 turn.

Master setting plug is for setting L_1 and L_8 ring gages shown on figure 9.7. Master setting ring is for setting L_1 and L_9 plug gages shown on figure 9.10

See tables IX.8 and IX.9 for dimensions, table IX.10 for tolerances.

FIGURE 9.4 -Master setting plug and ring gages for setting pitch diameters of threaded plug and ring gages for NGT, NGT(C1) and SGT.

Downloaded from http://www.everyspec.com

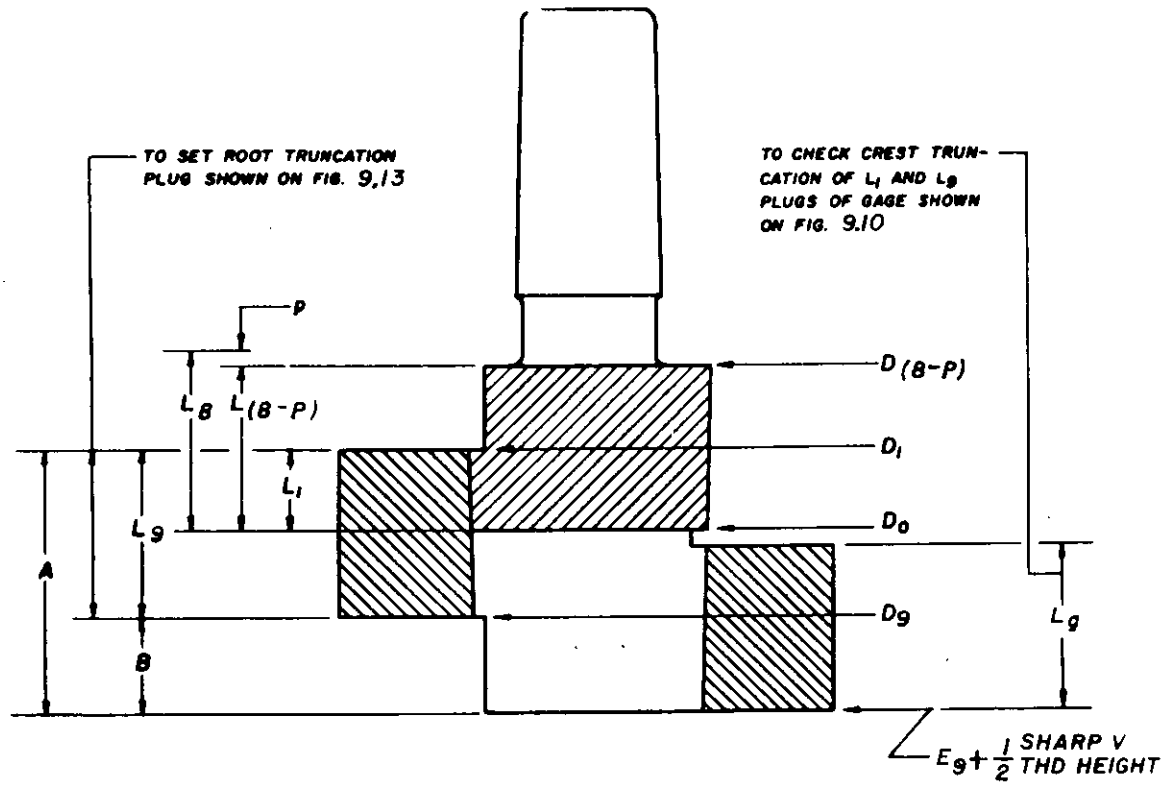

Master setting plug is for setting crest truncation ring shown in Figure 9.8. Master setting ring is for setting root truncation plug shown in Figure 9.13 and to check crest truncation of L_1 and L_9 plugs of gage shown in Figure 9.10.

See Tables IX.8 and IX.9 for dimensions, Table IX.10 for tolerances.

FIGURE 9.5 -Master setting plug and ring gages for setting and checking major diameters of plug and ring gages for NGT, NGT(C1) and SGT.

Downloaded from http://www.everyspec.com

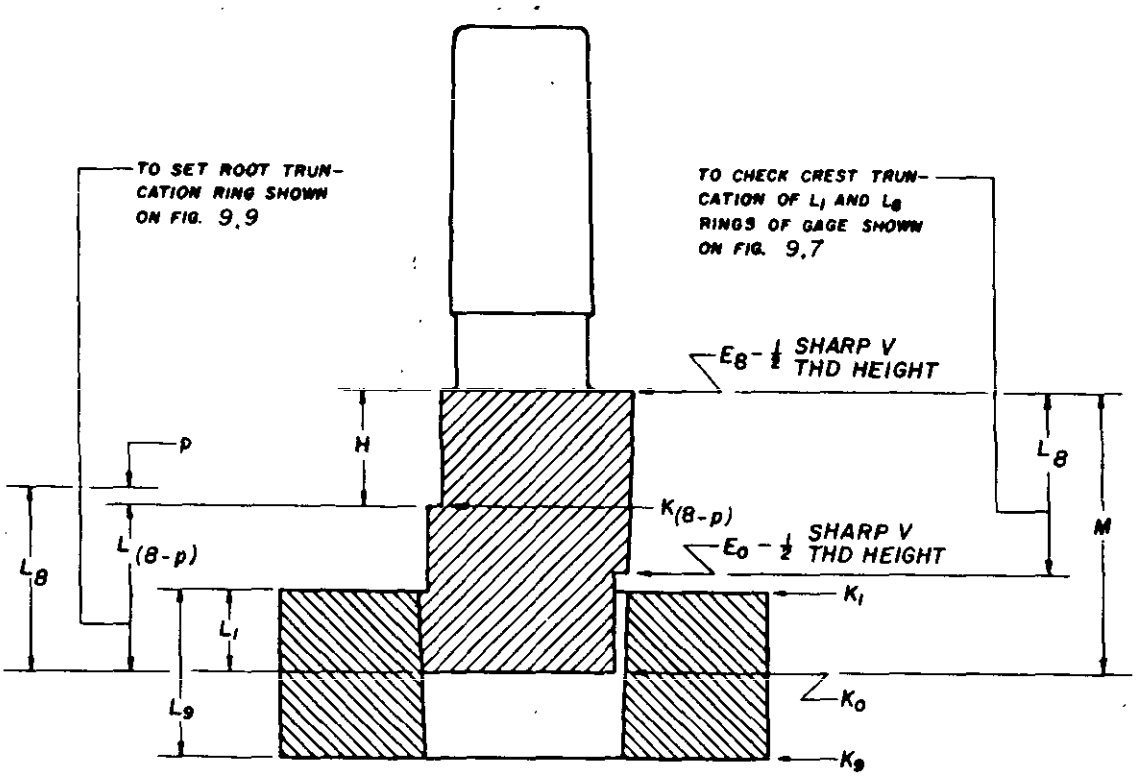

Master setting plug is for setting root truncation ring shown in Figure 9.9 and to check crest truncation of L_1 and L_8 rings of gage shown on Figure 9.7. Master setting ring is for setting crest truncation plug shown in Figure 9.11 and maximum bore plug shown in Figure 9.12.

See Tables IX.8 and IX.9 for dimensions, Table IX.10 for tolerances.

FIGURE 9.6 - Master setting plug and ring gages for setting and checking minor diameters of plug and ring gages for NGT, NGT(C1) and SGT.

Downloaded from http://www.everyspec.com

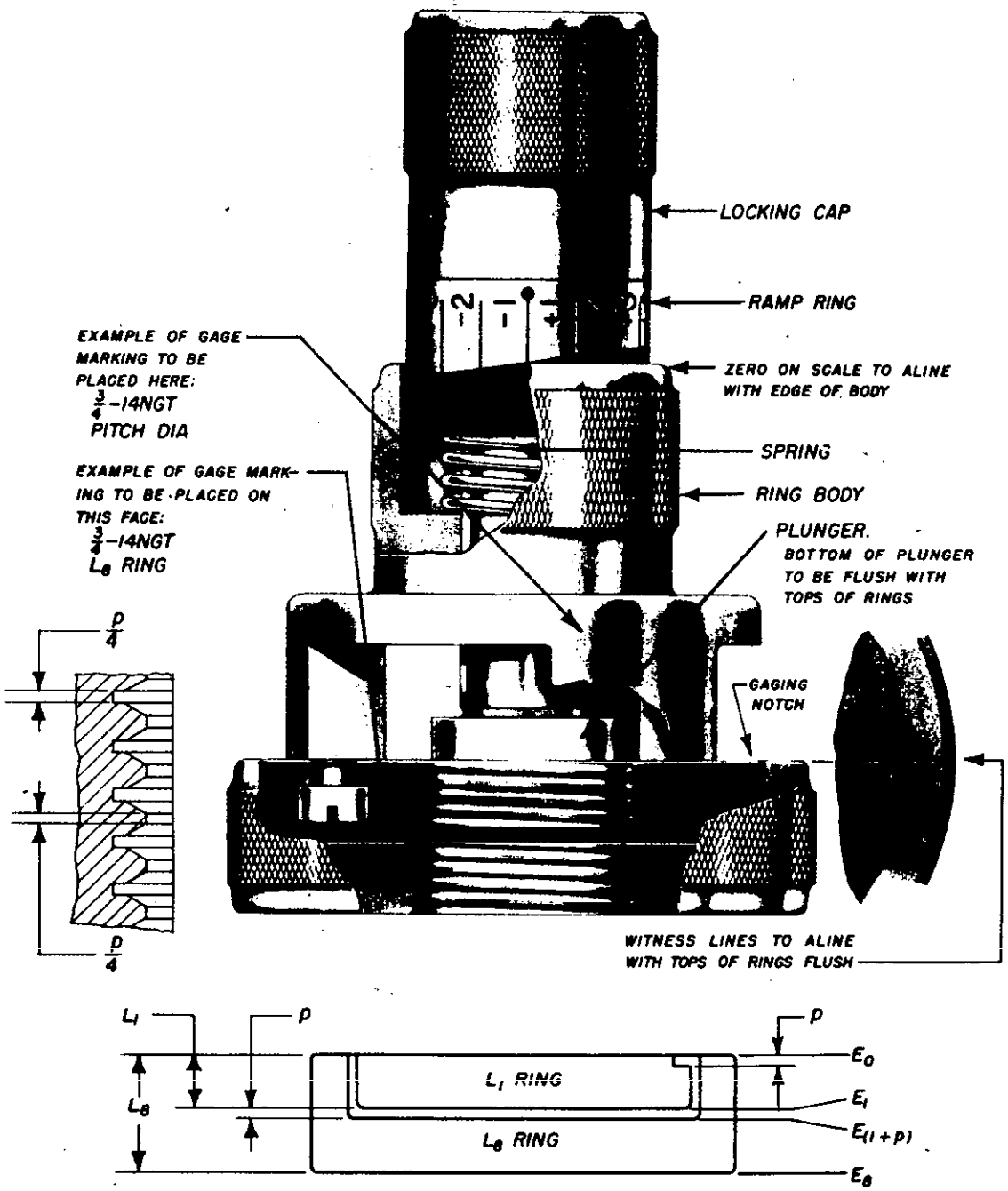

FIGURE 9.7 -Pitch diameter ring gages for NGT, NGT(C1) and SGT.

Downloaded from http://www.everyspec.com

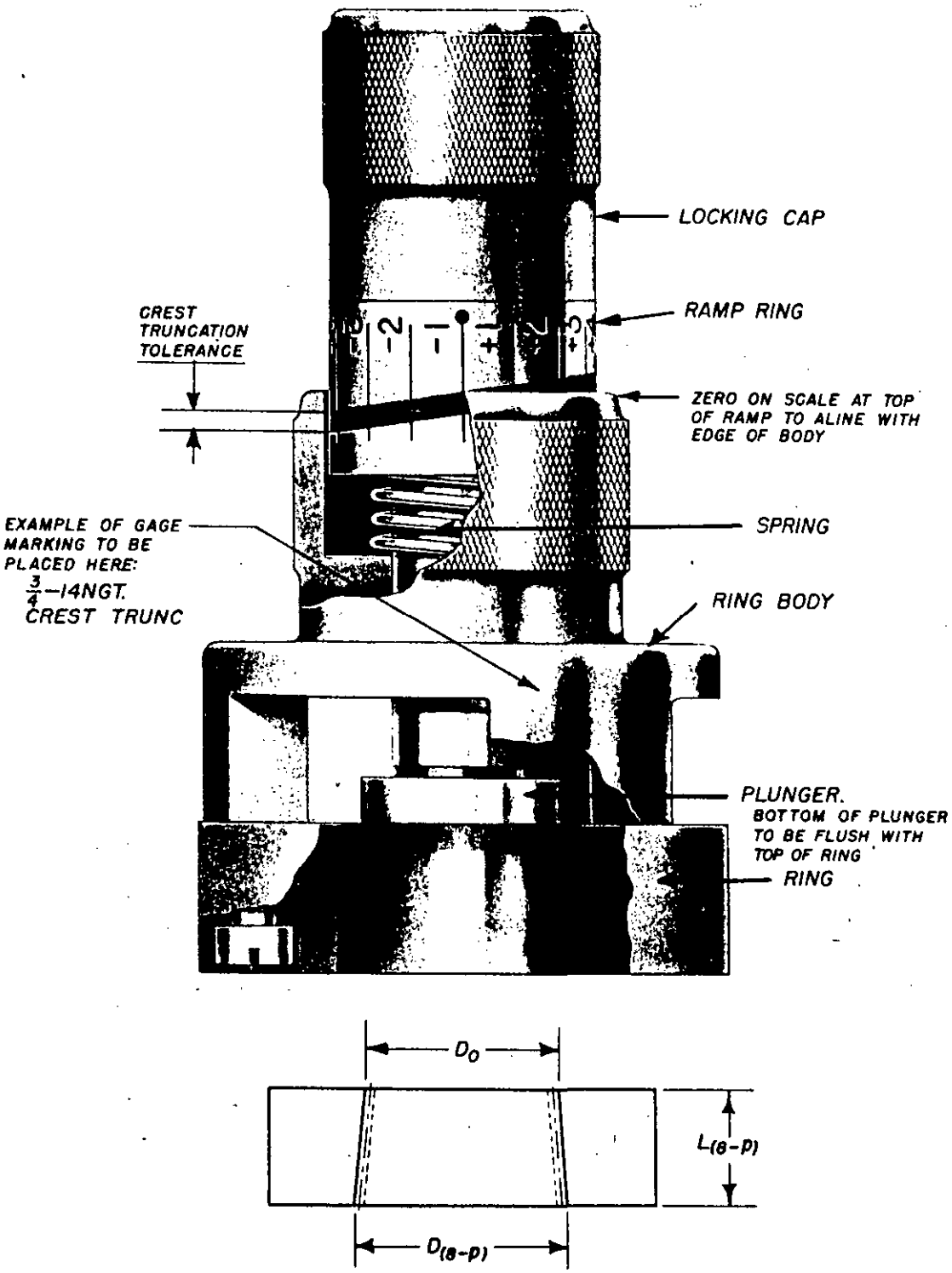

FIGURE 9.8 - Crest truncation ring gage for NGT, NGT(C1) and SGT.

Downloaded from http://www.everyspec.com

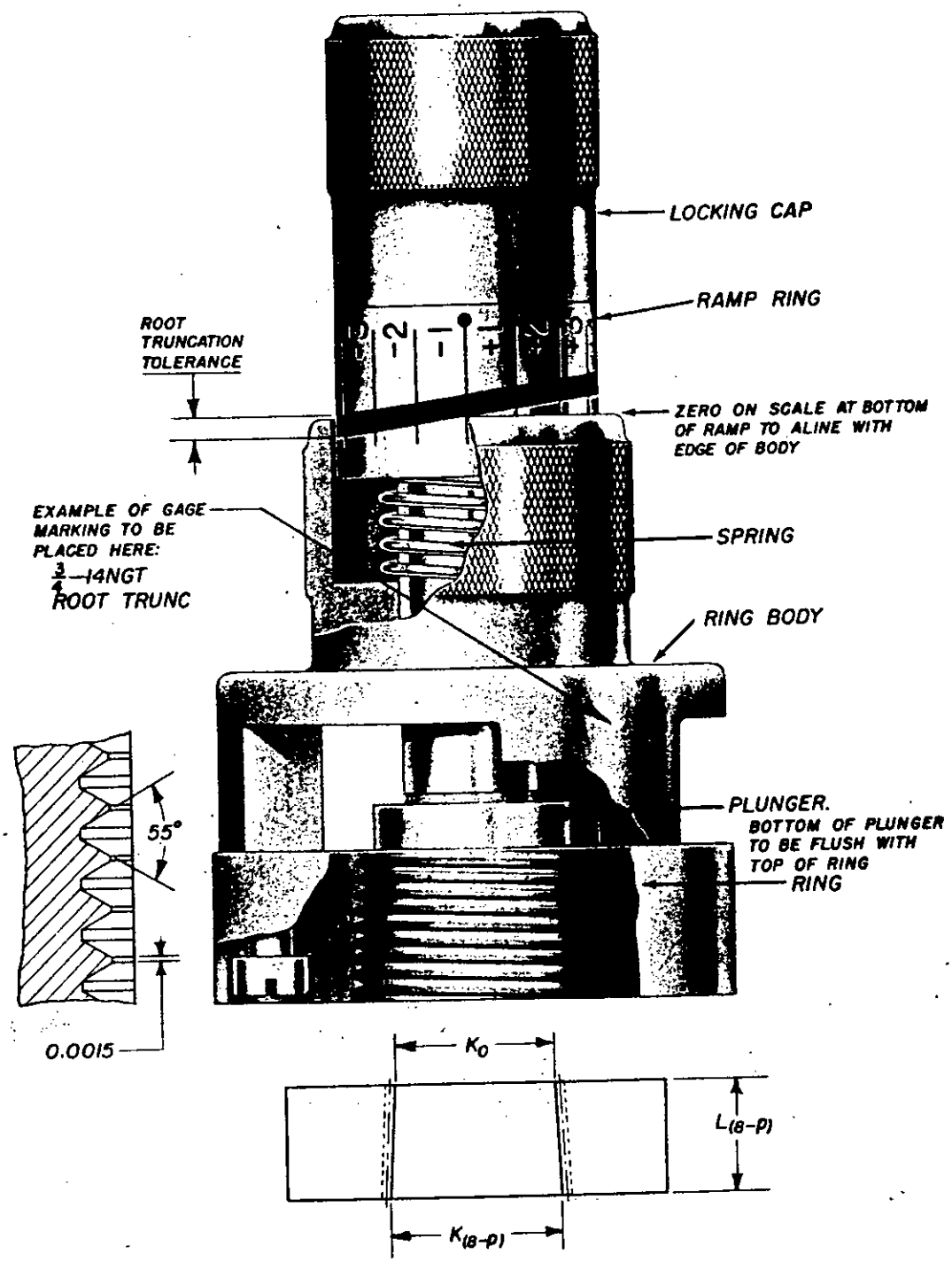

FIGURE 9.9 - Root truncation ring gage for NGT, NGT(C1) and SGT.

Downloaded from http://www.everyspec.com

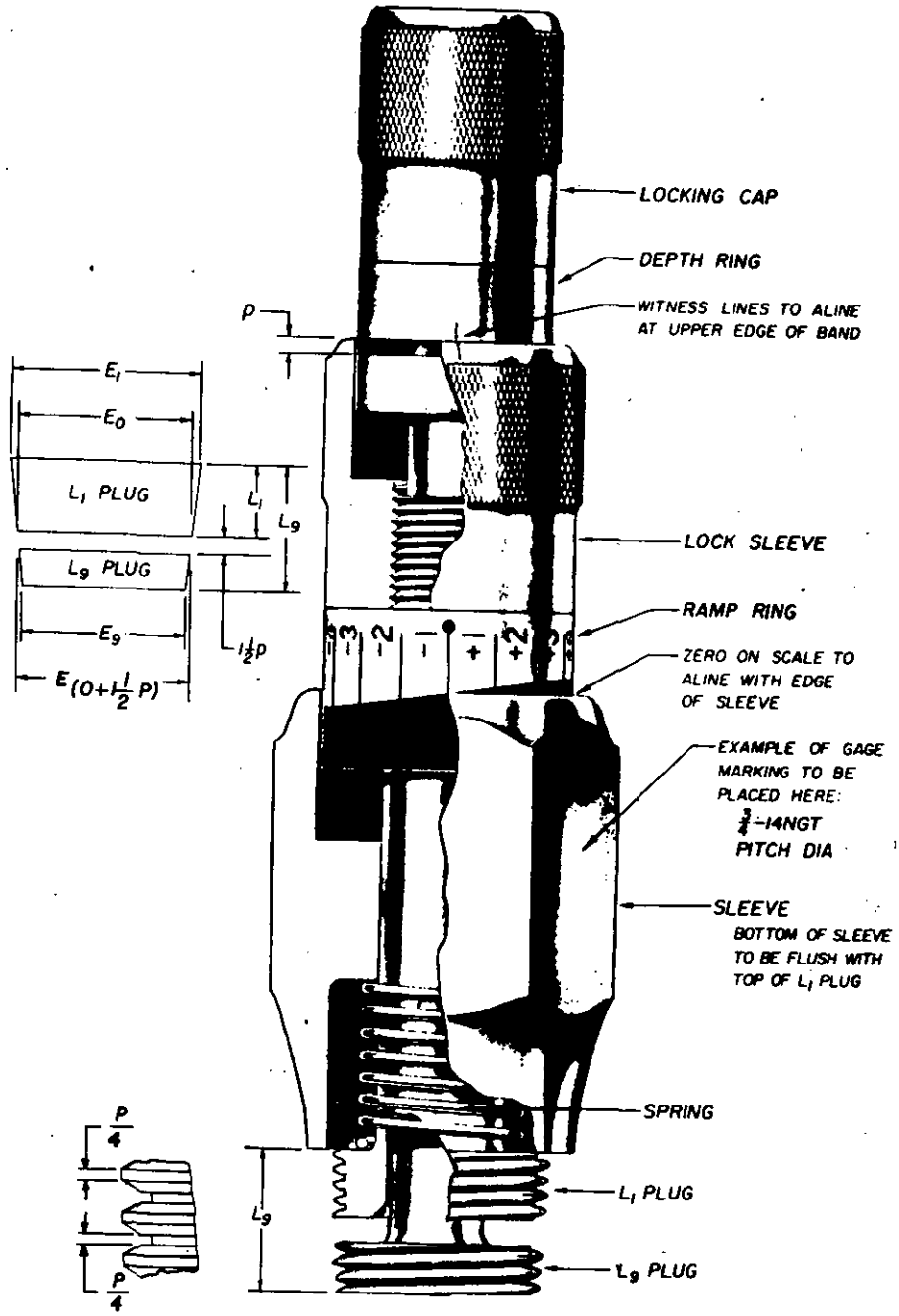

FIGURE 9.10 -Pitch diameter plug gage for NGT, NGT(C1) and SGT.

Downloaded from http://www.everyspec.com

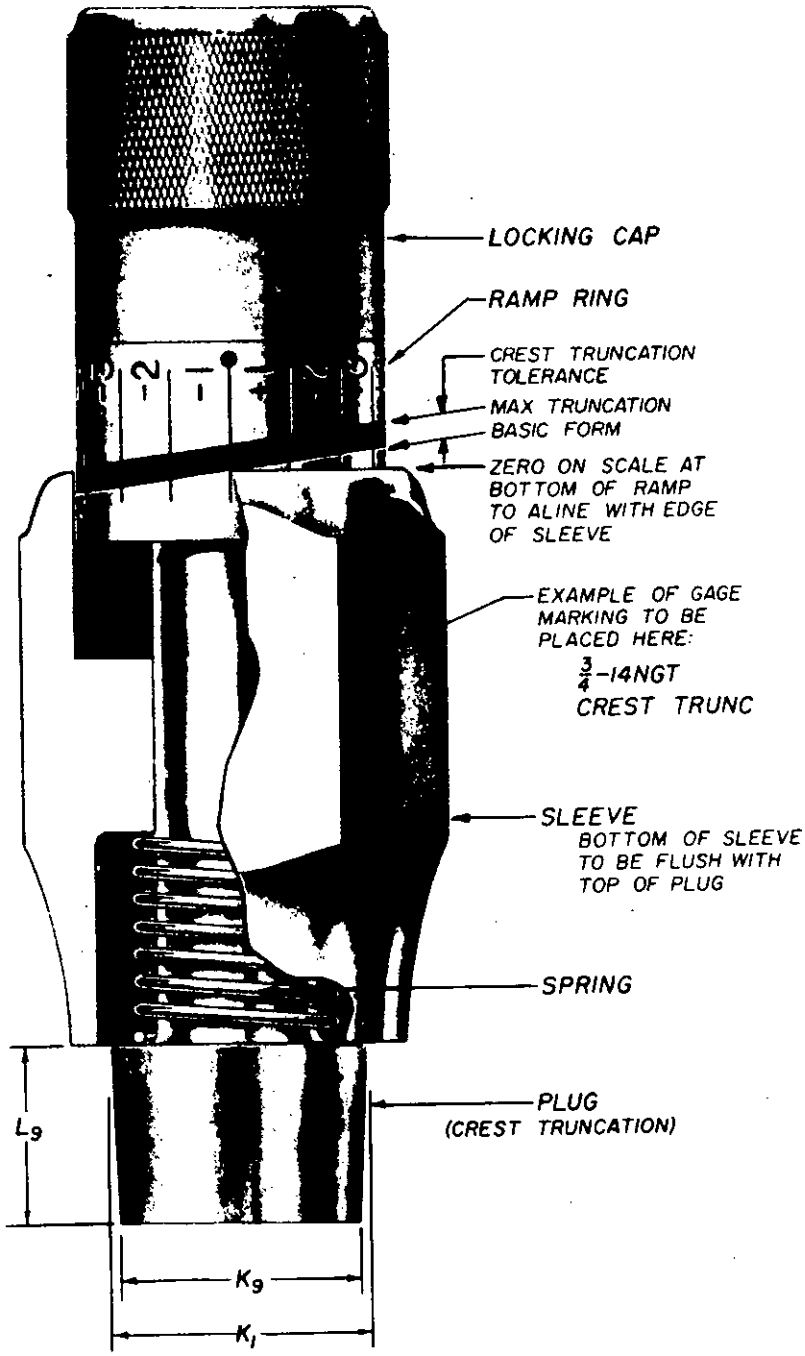

FIGURE 9.11 - Crest truncation plug gage for NGT, NGT(C1) and SGT.

Downloaded from http://www.everyspec.com

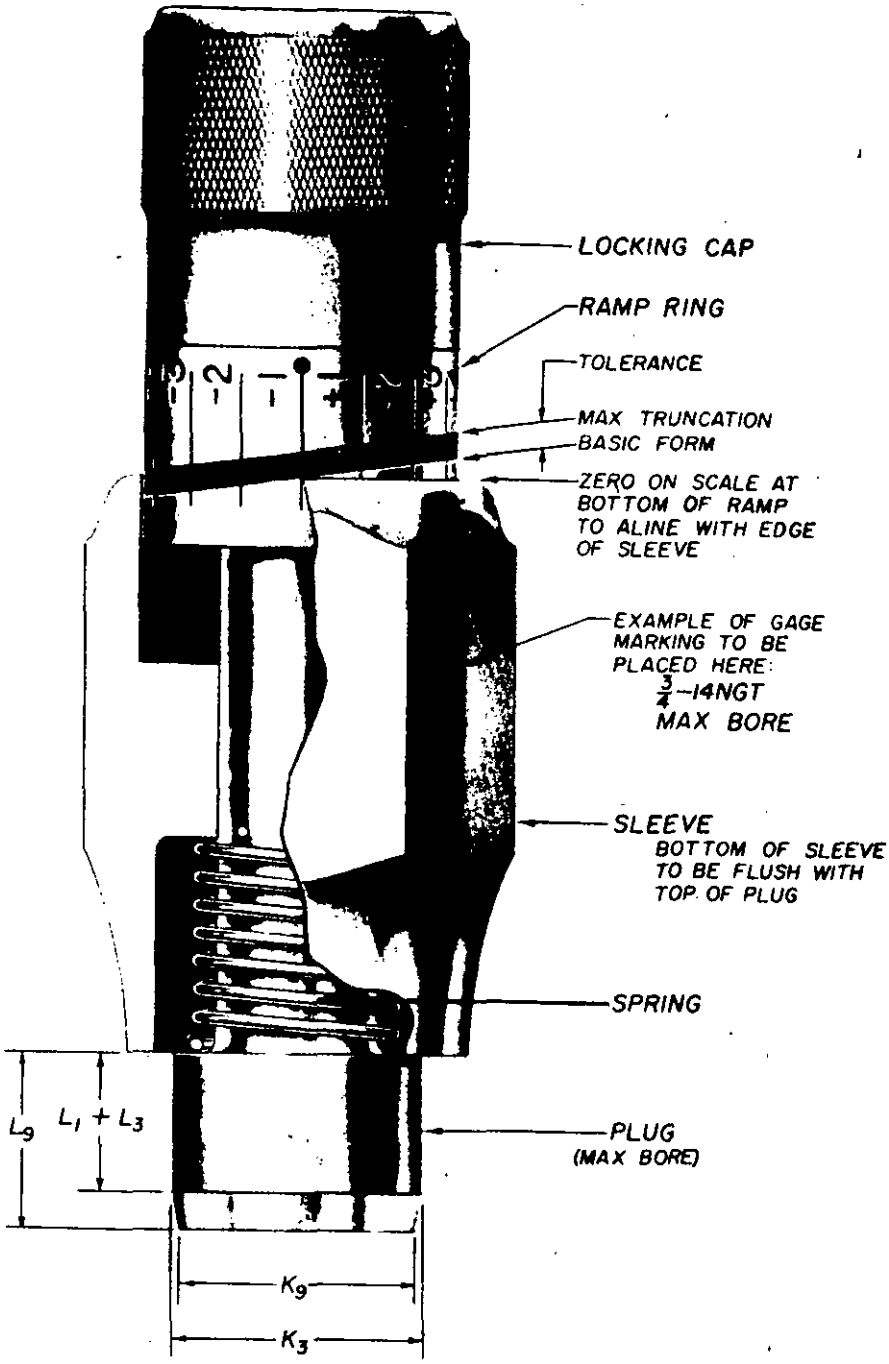

FIGURE 9.12 - Maximum bore plug gage for NGT, NGT(C1) and SGT.

Downloaded from http://www.everyspec.com

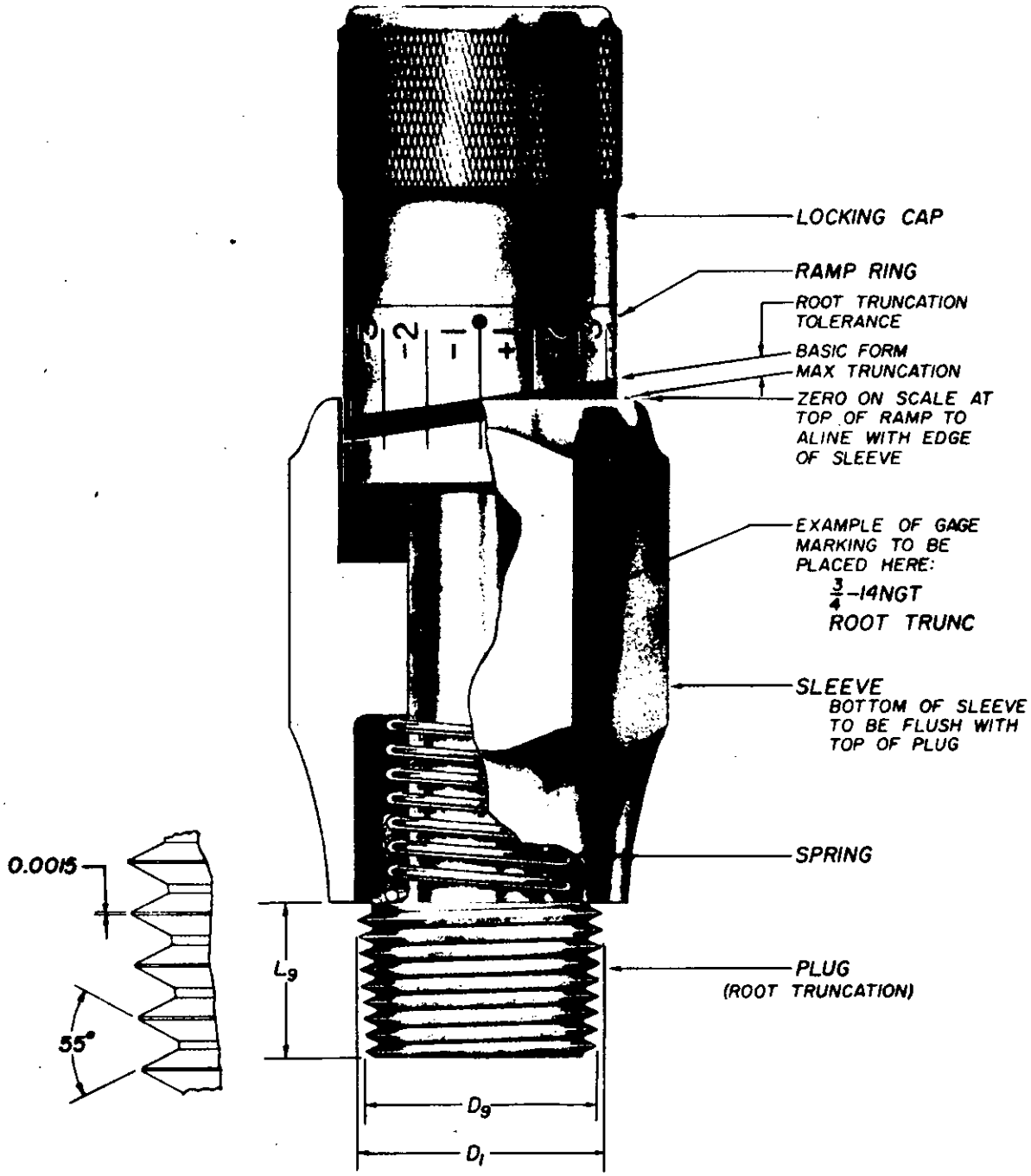

FIGURE 9.13 -Root truncation plug gage for NGT, NGT(C1) and SGT.

Downloaded from http://www.everyspec.com

MILITARY INTERESTS:

Custodians:

Army - AR
Navy - AS
Air Force - 99

Review Activities:

Air Force - 15, 68
DLA - GS

CIVIL AGENCY COORDINATING ACTIVITIES

GSA - 7FXE
NASA - JFK

PREPARING ACTIVITY:

DLA - IS

(DOD Project THDS-0073)

Downloaded from http://www.everyspec.com

INSTRUCTIONS: In a continuing effort to make our standardization documents better, the DoD provides this form for use in submitting comments and suggestions for improvements. All users of military standardization documents are invited to provide suggestions. This form may be detached, folded along the lines indicated, taped along the loose edge *(DO NOT STAPLE)*, and mailed. In block 5, be as specific as possible about particular problem areas such as wording which required interpretation, was too rigid, restrictive, loose, ambiguous, or was incompatible, and give proposed wording changes which would alleviate the problems. Enter in block 6 any remarks not related to a specific paragraph of the document. If block 7 is filled out, an acknowledgement will be mailed to you within 30 days to let you know that your comments were received and are being considered.

NOTE: This form may not be used to request copies of documents, nor to request waivers, deviations, or clarification of specification requirements on current contracts. Comments submitted on this form do not constitute or imply authorization to waive any portion of the referenced document*(s)* or to amend contractual requirements.

(Fold along this line)

(Fold along this line)

DEFENSE LOGISTICS AGENCY

NO POSTAGE NECESSARY IF MAILED IN THE UNITED STATES

OFFICIAL BUSINESS
PENALTY FOR PRIVATE USE $300

BUSINESS REPLY MAIL
FIRST CLASS PERMIT NO. 4966 WASHINGTON D. C.
POSTAGE WILL BE PAID BY THE DEFENSE LOGISTICS AGENCY

Defense Industrial Supply Center
ATTN: DISC-ECF
700 Robbins Ave.
Philadelphia, PA 19111-5096

Downloaded from http://www.everyspec.com

STANDARDIZATION DOCUMENT IMPROVEMENT PROPOSAL

(See Instructions – Reverse Side)

1. DOCUMENT NUMBER	2. DOCUMENT TITLE
FED-STD-H28/9A	GAS CYLINDER VALVE OUTLET AND INLET THREADS

3a. NAME OF SUBMITTING ORGANIZATION

b. ADDRESS *(Street, City, State, ZIP Code)*

4. TYPE OF ORGANIZATION *(Mark one)*

- ☐ VENDOR
- ☐ USER
- ☐ MANUFACTURER
- ☐ OTHER *(Specify)*: _____

5. PROBLEM AREAS

a. Paragraph Number and Wording:

b. Recommended Wording:

c. Reason/Rationale for Recommendation:

6. REMARKS

7a. NAME OF SUBMITTER *(Last, First, MI)* – Optional

b. WORK TELEPHONE NUMBER *(Include Area Code)* – Optional

c. MAILING ADDRESS *(Street, City, State, ZIP Code)* – Optional

8. DATE OF SUBMISSION *(YYMMDD)*

DD FORM 82 MAR 1426

PREVIOUS EDITION IS OBSOLETE.