Downloaded from http://www.everyspec.com

FED-STD-H28/9

31 August 1978

Superseding
NBS Handbook H28 (1957)
Part II, Section IX

FEDERAL STANDARD

SCREW-THREAD STANDARDS FOR FEDERAL SERVICES

SECTION 9

GAS CYLINDER VALVE OUTLET AND INLET THREADS

This standard was approved by the Commissioner Federal Supply Service, General Services Administration, for the use of all Federal agencies.

Orders for this publication are to be placed with General Services Administration, acting as an agent for the Superintendent of Documents. Single copies of this standard are available at the GSA Business Service Centers in Boston, New York, Atlanta, Chicago, Kansas City, MO, Fort Worth, San Francisco, Los Angeles, and Seattle, or from the General Services Administration, Specifications and Consumer Information Distribution Branch, Building 197, Washington Navy Yard, Washington, DC 20407.

FSC THDS

Downloaded from http://www.everyspec.com

INFORMATION SHEET ON FEDERAL STANDARDS

This Federal Standard is issued in loose leaf form to permit the insertion or removal of new or revised pages and sections.

All Users of Federal Standards should keep them up to date by inserting revised or new pages as issued and removing superseded and cancelled pages.

New and revised pages will be issued under Change Notices which will be numbered consecutively and will bear the date of issuance. Change Notices should be retained and filed in front of the Standard until such time as they are superseded by a reissue of the entire Standard.

NOTICE

From 1939, the Interdepartmental Screw Thread Committee (ISTC), under the Chairmanship of the National Bureau of Standards (NBS), Department of Commerce had developed and published NBS Handbook H28, Screw-Thread Standards for Federal Services.

Section 487 of Title 40 of the U.S. Code states that the authority for development of Federal Standards for procurement purposes rests with the General Services Administration (GSA).

In November 1976, the ISTC was terminated, and the General Services Administration (GSA) accepted the responsibility for NBS Handbook H28 and agreed to convert it and maintain it as a Federal Standard.

The standards which had been published as NBS Handbook H28, Part I, Part II and Part III will now be promulgated as a fully coordinated FED-STD-H28, maintaining the existing sections and identifying them with slant lines. For example, NBS Handbook H28, Part I, Section 3 will be detailed standard FED-STD-H28/3 which must be procured individually.

Military Custodians

ARMY - AR
NAVY - AS
AIR FORCE - 11

Preparing Activity

DLA-IS

(Project No. THDS-0012)

Civil Agency Coordinating Activity

ACO	FPI	MSF
AFS	FRA	NBS
BPA	FSS	PCD
FHW	JFK	RDS
FIS	LRC	TCS

Downloaded from http://www.everyspec.com

CONTENTS

		Page
1.	INTRODUCTION	1
2.	OUTLET CONNECTIONS	1
3.	INLET CONNECTIONS	12
4.	SAFETY DEVICE THREADS	13

The text of this section has been updated to be in agreement with the latest U.S. Industry practice. Only the introduction of that portion of the NBS HANDBOOK H28 which pertains to gaging of valve outlet and inlet threads have been retained, with minor editorial changes. The listing of gases with outlet connection numbers (Table IX.1) and the numerical listing of valve outlet connections showing the connecting threads (Table IX.2) have been deleted. This standard now incorporates the CGA STANDARD V-1-1977 (ANSI B57.1-1977) Compressed Gas Cylinder Valve Outlet and Inlet Connections. Table 9.1 and 9.2 list the valve outlet connection numbers and the valve inlet connections, identifying the changes from the 1957 issue of NBS HANDBOOK H28 to the CGA STANDARD V-1-1977. Figures 9.1 thru 9.34 are eliminated and replaced with the CGA STANDARD V-1-1977.

Reorganization of the document from NBS HANDBOOK H28 to FED-STD-H28 creates an editorial inconvenience, when maintaining continuity of cross references amongst the pages, paragraphs, tables and figures of the different sections. For this standard individual sections will be numbered sequentially starting with (1) one. If the reprinted text refers to another page, such as Page 6.3, this will be understood to mean section 6 page 3. All figures and tables will maintain the estabilshed designations, prefixed with the section; e.g. Table 3.1 and Figure 2.5 to identify their location in this standard. All appendices will be incorporated in the basic document FED-STD-H28 with other general information and will continue to be identified with the prefix A.

Downloaded from http://www.everyspec.com

1. INTRODUCTION

1. General.—The first efforts to develop standards for compressed gas cylinder valve threads followed immediately after World War I, and were inspired by the difficulties encountered both by industry and the military services because of the multiplicity of connections that were then in use.

Through the activity of the Gas Cylinder Valve Thread Committee of the Compressed Gas Manufacturers' Association, Inc., material progress was made through the years that followed, with the result that, when the United States became involved in World War II, the gas industries themselves had materially improved this situation. Several of the compressed gas industries had achieved virtual standardization at tremendous cost for replacement of valve equipment. Their standards, however, were not completely formalized nor fully coordinated with other related standards. Much of the progress between World War I and World War II was the re ult of interest in the problem by the Federal Specifications Board.

The circumstances surrounding industrial and military users of compressed gases during World War II brought into clear focus the need for acceleration of the standardizing project for cylinder valve threads. They created not only the necessity but also a splendid opportunity for the compressed gas industry, the Military services, and other Federal agencies to study cooperatively the standardizing problems of valve outlet threads. These studies resulted in closer definition and appreciation of each valve outlet and in a more balanced relationship between the many types and sizes.

When the Standards Associations representing Great Britain, Canada, and the United States met in Ottawa in October 1945 to consider unification of screw threads, a fairly well developed plan for standardization of compressed gas cylinder valve threads was presented to the Conference by the Valve Thread Standardization Committee of the Compressed Gas Manufacturers' Association, Inc. (CGMA). These proposed standards represented the experience and knowledge of compressed gas manufacturers, valve manufacturers, and the needs and requirements of varied users of gas cylinder valves, including the military services and other Federal agencies. Approval of these standards to the extent to which they were then developed was given by the U S Department of Commerce, the U.S Army, and the U.S. Navy through the Interdepartmental Screw Thread Committee following a joint meeting with the representatives of CGMA in August 1945. Much progress was made later in that year at the Canadian Section Meeting of CGMA tending to unify United States and Canadian practices. During January 1946 through conference between representatives of the CGMA Valve Thread Standardization Committee[8] and the Interdepartmental Screw Thread Committee in Washington, agreements were reached that resulted in final approval of considerable additional gas cylinder valve thread data. These data were included in the 1950 supplement to Handbook H28. The 1957 issue of H28 includes more detailed data on the outlet and inlet connections that were previously shown. Since 1957 there has been a tremendous increase in the number of gases required for industrial, military and medical use. This issue incorporates the agreements reached by members of the Compressed Gas Association and representatives from the Federal Agencies by adoption of CGA Standard V-1-1977.

2. Medical Gas Cylinder Valve Connections.—As early as 1940 it was evident to various medical societies, as well as to the manufacturers of medical gases that a system should be devised to prevent the interchangeability of medical gas cylinders equipped with flush-type valves when used with medical gas administering apparatus. Various means for accomplishing this were studied. The most difficult obstacle to be overcome was that of devising a system that would permit the adjustment of existing apparatus without interfering with its use and without requiring that it be returned to the manufacturer for conversion. The system contained in these standards, and known as "The Pin-Index Safety System for Flush-Type Cylinder Valves" is the result of the concerted efforts of the companies and organizations concerned. This standard has been submitted to Technical Committee No. 58 of the International Organization for Standardization as a proposed International Standard.

3. Scope.—The valves for cylinders containing compressed gases embody several screw threads, namely: (1) The outlet connection, (2) the inlet, neck, or valve to cylinder connection, (3) the safety device cap or plug, and (4) the various threads associated with the valve mechanism. While the practice for all of these threads is fairly well established, only the outlet threads (1) and the inlet threads (2) have been fully standardized.

4. APPLICABLE DOCUMENT. Table 9.1 is a numerical listing of valve outlet connections numbers, identifying the connecting threads and the changes from the 1966 printing of H28 (1957) to the CGA Standard V-1-1977. For the alphabetical list of gases and connections assigned use the Compressed Gas Association standard CGA Standard V-1-1977 (ANSI B57.1-1977).

2. OUTLET CONNECTIONS

Downloaded from http://www.everyspec.com

TABLE 9.1 NUMERICAL LISTING OF VALVE OUTLET CONNECTIONS SHOWING THE CONNECTING THREADS

Valve Outlet Connection Number	Thread	NBS H28 (1966)	CGA V-1 1977	Remarks
110	.3125 - 32UNEF-2B-RH-INT	No	Yes	Connection used by industry in past - added as alternate or limited standard.
120	.373 - 24NGO-RH-EXT	Yes	No	Eliminated by CGA in 1977 - new standard 180.
160	1/8 - 27NGT-RH-INT	Yes	Yes	Changed to alternate or limited standard with some changes in gas assignments.
165	.4375 - 20 UNF-2A-RH-EXT (1/4" SAE Flare)	No	Yes	Connection used by industry in past - added as alternate or limited standard.
170	.5625 - 18UNF-2A-RH-EXT	No	Yes	Connection used by industry in past - added as alternate or limited standard.
180	.625 - 18UNF-2A-RH-EXT	No	Yes	Newly designed connection added.
182	.625 - 18UNF-2A-RH-EXT (3/8" SAE Flare)	No	Yes	Connection used by industry in past - added as alternate or limited standard.
200	.625 - 20NGO-RH-EXT	Yes	Yes	Changed to alternate or limited standard with some changes in gas assignments.
240	3/8 - 18NGT-RH-INT	Yes	Yes	Gas assignments changed by CGA 1977.

Downloaded from http://www.everyspec.com

Valve Outlet Connection Number	Thread	NBS H28 (1966)	CGA V-1 1977	Remarks
260	3/8 - 18NGT-RH-INT (with 1" nut)	Yes	No	Was only alternate in H28 - eliminated by CGA in 1965 - New CGA standard 240, 705.
280	.745 - 14NGO-RH-EXT	No	Yes	Added by CGA in 1965.
290	.745 - 14NGO-LH-EXT	Yes	Yes	Changed to alternate or limited standard with some changes in gas assignments.
295	.750 - 16UNF-2A-RH-EXT (1/2" SAE Flare)	No	Yes	Connection used by industry in past added.
296	.803 - 14UNS-2B-RH-INT (Bullet Nipple)	No	Yes	Newly designed connection added.
300	.825 - 14NGO-RH-EXT (Conical Nipple)	Yes	Yes	Changed to alternate or limited standard with some changes in gas assignments.
320	.825 - 14NGO-RH-EXT (Flat Nipple)	Yes	Yes	Gas assignments changed by CGA 1977.
326	.825 - 14NGO-RH-EXT (Small Round Nipple)	No	Yes	Formerly 1320 added by CGA in 1965.
330	.825 - 14NGO-LH-EXT (Flat Nipple)	Yes	Yes	Gas assignments changed by CGA 1977.

Downloaded from http://www.everyspec.com

Valve Outlet Connection Number	Thread	NBS H28 (1966)	CGA V-1 1977	Remarks
340	1/2 - 14NGT-RH-EXT	Yes	No	Eliminated by CGA in 1965.
346	.825 - 14NGO-RH-EXT	No	Yes	Formerly 1340 added by CGA in 1965.
350	.825 - 14NGO-LH-EXT (Round Nipple)	Yes	Yes	Gas assignments changed by CGA 1977.
360	1/2 - 14NGT-RH-EXT	Yes	No	Was only an alternate in H28 - eliminated by CGA in 1977 - New standard 510, 668.
380	1/2 - 14NGT-RH-INT	Yes	No	Eliminated by CGA in 1965.
410	.850 - 14NGO-LH-EXT	No	Yes	For Canada only.
440	.875 - 14UNF-2A-RH-EXT (5/8" SAE Flare)	No	Yes	Connection used by industry in past added.
450	.875 - 14UNF-2A-LH-EXT (5/8" SAE Flare)	No	Yes	Newly designed connection added.
500	.885 - 14NGO-RH-INT (Bullet Nipple)	No	Yes	Newly designed connection added.
510	.885 - 14NGO-LH-INT	Yes	Yes	Gas assignments changed by CGA in 1977.
520	.895 - 18NGO-RH-EXT	Yes	Yes	Changed to alternate or limited standard with some changes in gas assignments.
540	.903 - 14NGO-RH-EXT	Yes	Yes	Unchanged.

Downloaded from http://www.everyspec.com

Valve Outlet Connection Number	Thread	NBS H28 (1966)	CGA V-1 1977	Remarks
555	.903 - 14NGO-LH-EXT	No	Yes	Connection used by industry in past - added. (Formerly known as 1550).
580	.965 - 14NGO-RH-INT	Yes	Yes	Gas assignments changed by CGA in 1977.
590	.965 - 14NGO-LH-INT	Yes	Yes	Changed to alternate or limited standard with some changes in gas assignments.
620	1.030 - 14NGO-RH-EXT (with groove)	Yes	No	Eliminated by CGA in 1977 - (new CGA std. 668, 510, 350).
640	1.030 - 14NGO-RH-EXT (with 1/8-27NGT-RH-INT)	Yes	No	Eliminated by CGA in 1977 - (New CGA std. 750).
660	1.030 - 14NGO-RH-EXT (Face Washer) (Without Groove)	Yes	Yes	Changed to alternate or limited standard with some changes in gas assignments.
668	1.030 - 14NGO-RH-EXT (Recessed Washer)	No	Yes	Newly designed connection added.
670	1.030 - 14NGO-LH-EXT (Face Washer)	Yes	Yes	Gas assignments changed by CGA in 1977.
677	1.030 - 14NGO-LH-EXT (Round Nipple)	No	Yes	Connection used by industry in past added as alternative or limited standard.
678	1.030 - 14NGO-LH-EXT (Recessed Washer)	No	Yes	Connection used by industry in past added as alternative or limited standard.

Downloaded from http://www.everyspec.com

Valve Outlet Connection Number	Thread	NBS H28 (1966)	CGA V-1 1977	Remarks
679	1.030 - 14NGO-LH-EXT (Tipped Nipple)	No	Yes	Connection used by industry in past added.
705	1.125 - 14UNS-2A-RH-EXT	No	Yes	Newly designed connection added.
750	1.125 - 14UNS-2A-LH-EXT (Long Nipple)	No	Yes	Newly designed connection added.
755	1.125 - 14UNS-2A-LH-EXT (Short Nipple)	No	Yes	Newly designed connection added.
792	1.500 - 12UNF-2A-RH-EXT	No	Yes	Connection used by industry in past added.
795	1.500 - 12UNF-2A-LH-EXT	No	Yes	Newly designed connection added.
800	3/8 - 18NGT-RH-INT (Yoke)	Yes	Yes	Unchanged.
820	1.030 - 14NGO-RH-EXT (Yoke) Washer on outer face	Yes	Yes	Unchanged.
840	1.030 - 14NGO-RH-EXT (Yoke) Washer on inside of Recess	Yes	Yes	Unchanged.
845	1.125 - 14UNS-2A-RH-EXT (Yoke)	No	Yes	Newly designed connection added.
850*	Yoke Connection for Air (No Threads)	No	Yes	Newly designed connection added.

Downloaded from http://www.everyspec.com

Valve Outlet Connection Number	Thread	NBS H28 (1966)	CGA V-1 1977	Remarks
860*	Basic dimensional drawing for pin indexed yoke connections for medical gases.	No	Yes	New basic drawing added.
870*	Pin-indexed yoke for medical gases, Pins 2-5	Yes	Yes	Unchanged.
880*	Pin-indexed yoke for medical gases, Pins 2-6	Yes	Yes	Unchanged.
890*	Pin-indexed yoke for medical gases, Pins 2-4	Yes	Yes	Unchanged.
900*	Pin-indexed yoke for medical gases, Pins 1-3	Yes	Yes	Unchanged.
910*	Pin-indexed yoke for medical gases, Pins 3-5	Yes	Yes	Unchanged.
920*	Pin-indexed yoke for medical gases, Pins 3-6	Yes	Yes	Unchanged.
930*	Pin-indexed yoke for medical gases, Pins 4-6	Yes	Yes	Unchanged.
940*	Pin-indexed yoke for medical gases, Pins 1-6	Yes	Yes	Unchanged.
950*	Pin-indexed yoke for medical gases, Pins 1-5	No	Yes	Newly designated connection added.

Downloaded from http://www.everyspec.com

Valve Outlet Connection Number	Thread	NBS H28 (1966)	CGA V-1 1977	Remarks
960*	Pin-indexed yoke for medical gases, Pins 1-4	No	Yes	Newly designed connection added.
965*	Pin-indexed yoke for medical gases, Single Pin	No	Yes	Newly designed connection added.
1310*	Yoke connection for air (No Threads)	No	Yes	Changed to alternate or limited standard with some changes in gas assignment.
1320	.825 - 14NGO-RH-EXT (Small Round Nipple)	No	No	Renumbered to 326.
1340	.825 - 14NGO-RH-EXT (Large Round Nipple)	No	No	Renumbered to 346.
1550	.903 - 14NGO-LH-EXT	No	No	Renumbered to 555.

Downloaded from http://www.everyspec.com

TABLE 9.2 INLET CONNECTING THREADS

Valve Inlet Connection	Thread	NBS H28 (1966)	CGA V-1 1977	Remarks
NGT	National Gas Taper Thread Series	Yes	Yes	Unchanged.
SGT	Special Gas Taper Thread Series	Yes	Yes	Unchanged.
NGS	National Gas Straight Thread Series	Yes	Yes	Unchanged.

Downloaded from http://www.everyspec.com

1. THREADS AND GAGING.—

The threads on the outlets are separated into four basic divisions - internal and external (INT and EXT), as well as right-hand and left-hand (RH and LH). Within each of the four divisions, further separation is made by varying the pitch and diameter of the threads. The diameters within each division are so spaced that adjoining sizes either will not enter or will not engage.

As far as practicable, the design of connections and assignment of the connections to gases has been made so as to prevent the interchange of connections which may result in a hazard. With the exception of outlets having taper pipe threads which seal at the threads, each outlet provides for screw threads which do not seal but merely hold the nipple against its seat. These screw threads have the Unified form, but are not in the regular series.

Past practice has firmly established many outlet connections for specific gases or groups of gases and in many cases these connections were retained. Small differences in the threads and other elements of the same connection were reconciled into one form and size, properly recorded and defined. By adhering to existing outlets where practicable, it was possible to put the new standard system into effect without the inconvenience and expense of a cumbersome and costly changeover. Alternate and co-standards have been established for some gases.

Keeping the established practice in mind when classifying and assigning the gases to their outlets, an effort was made to follow a plan whereby right-hand threads would be used for non-fuel gases and for water-pumped gases, whereas left-hand threads would be used for fuel gases and for oil-pumped gases. These left-hand threads are identified by a groove on the hexagon nut. An external thread is used on the valve in most cases, but some important groups of gases have an internal thread on the valve.

In general, many of the connecting threads are of the National Gas Outlet (NGO) type. This symbol was suggested and designated by the Interdepartmental Screw Thread Committee to provide for the peculiar needs of the industry.

For the NGO thread an allowance (minimum clearance) of from 0.0020 to 0.0050 in. between the mating parts is established to provide the desired looseness of fit at the threads, and to assure interchangeability between products of different manufacturers, who lacked a common standard in the past. The tolerances are in the direction of greater looseness and are determined on the basis of NS-3 data, except for the major diameter of the external threads for which the tolerance is limited to 0.0050 in. instead of 0.0098 in.

In addition to the NGO threads, other types of threads are used on the outlet connections as connecting threads or in the valve body. The types of threads are listed in table 9.3 along with references as to where information on limits of size and gaging of these threads may be found.

TABLE 9.3. Types of threads used on valve outlet connections cross referenced with limits of size and gaging information for the threads

Type of thread	Limits of size of thread	Gages and gaging
NGO	Table 9.4	FED-STD-H28/6
NGT	Table 9.5	Par. 1(b), p. 12
NPSM	Table 9.6	FED-STD-H28/7, par. 8
NPT	Tables 7.1 and 7.2, FED-STD-H28/7	FED-STD-H28/7, par. 8
1.125-14UNS	Table 3.1, FED-STD-H28/3	FED-STD-H28/6
UNF, UNEF	Table 2.21 FED-STD-H28/2	Table 6.19, FED-STD-H28/6

For purposes of clarity and consistency, all threads have RH-EXT(INT) in the thread designation even though it may not be required for proper thread identification.

2. CLEARANCE.—The maximum radius of any part of the valve from its centerline has been specified to insure clearance for the smallest (3¼-in.) standard cylinder valve protecting cap.

3. NUMBERING SYSTEM. Refer to CGA Standard V-1-1977.

4. ADAPTERS.—In the standardization of compressed gas valve outlet connections, more than one outlet is provided for some gases. To provide interchangeability of equipment for the same gas, adapters may be required. See CGA Standard V-I-1977, Section 4.

Downloaded from http://www.everyspec.com

TABLE 9.4 —*Limits of size of U.S. compressed gas cylinder valve outlet threads, NGO*

Thread designation	External thread					Internal thread				
	Major diameter		Pitch diameter		Minor diameter	Minor diameter		Pitch diameter		Major diameter
	Max	Min	Max	Min	Max	Min	Max	Min	Max	Min
1	2	3	4	5	6	7	8	9	10	11
	in.	in.	in.	in.	in.	in.	in.	in.	in.	in.
.373—24NGO-RH-EXT	0.3730	0.3680	0.3459	0.3435	0.3219	...	...	...	...	...
.375—24NGO-RH-INT	...	...	...	...	...	0.3299	0.3344	0.3479	0.3503	0.3730
.625—20NGO-RH-EXT	6230	6200	5923	5893	5637	...	...	...	...	...
.629—20NGO-RH-INT	...	...	...	...	...	5739	5793	.5933	.5983	.6280
.745—14NGO{-RH, -LH}-EXT	7430	7400	6986	6930	6574	...	...	...	...	...
.750—14NGO{-RH, -LH}-INT	...	...	...	...	...	6727	.6804	.7036	.7072	.7300
.825—14NGO{-RH, -LH}-EXT	8230	8200	7786	7730	7374	...	...	...	...	...
.830—14NGO{-RH, -LH}-INT	...	...	...	...	...	.7327	.7404	7536	.7572	.8300
.880—14NGO-LH-EXT	8800	8730	8336	8300	7924	...	...	...	...	...
.883—14NGO-LH-INT	...	...	...	...	...	8077	.8154	.8386	.8422	.8850
.895—18NGO-RH-EXT	8950	8900	8569	8533	8268	...	...	...	...	...
.890—18NGO-RH-INT	...	...	...	...	...	8589	.8449	.8629	.8665	.8900
.903—14NGO-RH-EXT	9030	8980	8566	.8530	8154	...	...	...	...	...
.908—14NGO-RH-INT	...	...	...	...	...	8307	8384	8616	8652	.9080
.950—14NGO{-RH, -LH}-EXT	9600	.9550	9136	.9100	8724	...	...	...	...	...
.955—14NGO{-RH, -LH}-INT	...	...	...	...	...	8877	.8954	.9186	9222	9650
1.030—14NGO{-RH, -LH}-EXT	1.0300	1.0250	9836	.9796	9424	...	...	...	...	...
1.035—14NGO{-RH, -LH}-INT	...	...	...	...	...	9377	9654	.9886	9926	1.0350

TABLE 9.5 —*Limits of size, National Gas Taper, Special Gas Taper threads; NGT, NGT(Cl), SGT*

Thread designation[a]	Hand-tight engagement,[c] L_1	External							Internal						
		Small end			Full threads		Large end		Neck radius, min, O	Pitch diameter at face, F_1	C'sink 90° x max. diameter	Full threads			
		Major diameter, D_0	Pitch diameter, E_0	Chamfer 45° x min. diameter	Pitch diameter, F_0	Length,[d] L_0	Major diameter, approx., D_{10}	Over-all length, approx., L_{10}				Bore, max., K_1	Pitch diameter, F_2	Length, (L_1+L_2)	Length of full root, min., L_0
1	2	3	4	5	6	7	8	9	10	11	12	13	14	15	16
	in.	in.	in.	in.	in.	in.	in.	in.	in.	in.	in.	in.	in.	in.	in.
⅛—27NGT	0.1800	0.3891	0.3633	13/64	0.3886	0.4072	0.4204	3/16	9/32	0.3748	13/32	0.3269	0.3566	0.2911	0.3652
¼—18NGT	.2000	.6218	.6774	27/64	5107	5343	5570	3/8	9/16	.4899	9/16	.4225	.4670	.3667	.4778
⅜—18NGT	.2400	.6664	6120	9/16	6479	5733	6913	15/16	11/16	.6270	11/16	.5572	.6016	.4067	.5178
½—14NGT	.3200	.8186	.7364	11/16	8052	7486	8623	1/2	9/16	.7784	3/4	.6879	.7450	.5343	.6771
¾—14NGT	.3390	1.0268	.9677	29/32	1.0157	7676	1.0793	3/4	13/16	.9889	1 1/16	.8972	.9543	.5533	.6961
¾—14NGT (Cl)-1	.3390	1.0268	.9677	29/32	1.0286	9461	1.0931	1 1/4	13/16	9889	1 1/16	.8972	.9543	.5533	.9461
¾—14NGT (Cl)-2	3390	1.0427	9836	30/32	1.0447	.9461	1.1170	1 1/4	(*)	(*)	(*)	(*)	(*)	(*)	(*)
¾—14NGT (Cl)-3	3390	1.0528	1.0037	31/32	1.0948	9461	1.1331	1 1/4	(*)	(*)	(*)	(*)	(*)	(*)	(*)
¾—14NGT (Cl)-4	3390	1.0878	1.0302	31/32	1.0893	9461	1.1576	1 1/4	(*)	(*)	(*)	(*)	(*)	(*)	(*)
¾—14SGT[b]	4008	1.047	0.9852	29/32	1.0731	7030	1.1364	3/4	13/16	1.0353	1 3/4	.8550	.9474	.5714	.7030
1—11½NGT	.4000	1.2532	1.2126	1 1/8	1.2712	9217	1.3457	1	15/16	1.2286	1 9/16	1.1278	1.1973	.6609	.8348
1¼—11½NGT	.4200	1.6267	1.5571	1 13/32	1.6160	9417	1.6931	1 1/16	1	1.5634	1 15/16	1.4713	1.5408	.6809	.8548
1½—11½NGT	.4200	1.8557	1.7961	1 19/32	1.8550	9417	1.9360	1 1/8	1 5/32	1.8223	1 29/32	1.7102	1.7796	.6809	.8548

All dimensions are basic. See figure 9.13 for relationship of dimensions.

[a] For uses other than chlorine, oversize threads for revalving are generally specified at 4 or 7 turns oversize. For chlorine, the ¾—14NGT(Cl)-1 size is standard; the −2 is 4 turns oversize; the −3 is 8½ turns oversize, and the −4 is 14 turns oversize.

[b] The ¾—14SGT (Special Gas Taper) thread is a standard having a taper of 3/16 (=1½ inches per foot on diameter) with a 60° thread normal to the axis and 0.0818 inch deep. For this thread col. 13, 14 and 15 are based on gages 0.7030 inch long. Cylinders are held to final inspection limits from basic to 1½ turns small, and valves to plus or minus 1 turn.

[c] The basic condition of fit is that the external thread with a pitch diameter of E_0 at the end (reference plane for gaging external thread) shall enter by hand engagement to a distance L_1 into the internal thread with a pitch diameter of E_1 at the opening (reference plane for gaging internal thread).

[d] External threads shall be threaded the approximate length L_{10} but gaged up to L_0. Dimension L_0 is equal to L_1 plus six (6) threads for all NGT threads and L_1 plus eight and a half (8½) threads for the NGT(Cl) threads. Dimension E_0 is measured at distance L_0 from E_1, and dimension D_{10} is measured at distance L_{10} from F_0. These longer external threads are desirable if further tightening should be necessary. To facilitate gaging, provision should be made to allow the L_0 ring gage to advance a distance of two full threads beyond the L_0 length (one turn for allowable variation in pitch diameter and one turn for allowable variation in taper).

[e] Full internal threads at the crests and roots shall extend throughout lengths L_1+L_2 (L_2=3 threads). This dimension determines the minimum metal on the inside of the neck to produce maximum bore K_1. Any metal below L_2 shall have tapped threads with full roots to a minimum length L_0 (L_1+5 threads for all NGT threads and L_1+8½ threads for the NGT(Cl) threads).

*Not applicable.

Downloaded from http://www.everyspec.com

3. INLET CONNECTIONS

The threads on the inlet, neck, or valve to cylinder connection are right hand of the following types:

(a) National gas taper threads, NGT or NGT (Cl) for chlorine.

(b) Special gas taper threads, SGT.

(c) National gas straight threads, NGS.

1. NGT, NGT(Cl), AND SGT THREADS.—The NGT and NGT(Cl) threads are based on the American Standard for taper pipe threads but are longer to provide fresh threads if further tightening is necessary. Manufacturing tolerances for the taper of these threads are as follows:

The taper on the pitch elements of *external* threads is 1/16 on diameter, (=3/4 in./ft.) with a minus tolerance of one turn but with no plus tolerance in gaging.

The taper on the pitch elements of *internal* threads is 1/16 on diameter, with a plus tolerance of one turn but with no minus tolerance in gaging.

The limits on crest and root truncation are the same as for the American National taper pipe threads as shown in table 7.1, FED-STD-H28/7.

The SGT threads are similar to the NGT threads except that the taper is 1/8 (=1 1/2 in./ft.) on diameter instead of 1/16.

(a). *Limits of size for the NGT, NGT(Cl), and SGT threads.*—Limits of size for these threads are given in table 9.5. (See footnote b of that table.) Figure 9.35 indicates the relationship of these dimensions.

(b). *Gaging of the NGT, NGT(Cl), and SGT threads.*—Special gages are required for the gaging of these threads because of their length and the rigid requirements for sealing the compressed gas against leakage. The working or inspection gages described in this section are called *ramp* gages. Ramp gages are similar to conventional taper pipe thread gages but provide more positive control of the thread elements; however, other gages acceptable to the procuring agency may be used.

1. Pitch diameter of external thread.—To check the pitch diameter of the external thread, the threaded ring gages shown on figure 9.36 are used. The L_1 ring gage is known as a *primary* gage since the reading taken on the ramp will be needed for use when additional gaging is done.

The L_8 ring is screwed onto the valve, flat face first. The L_1 ring is then screwed onto the valve. Both rings should be engaged to about the same tightness. For the thread to be acceptable, the rim of the L_8 ring should not project above the L_1 ring or below the bottom of the gaging notch on the L_1 ring.

The numbers on the ramp ring indicate the quarters of a turn the thread varies from basic. While the L_1 and L_8 rings are screwed onto the valve, the plunger should be pushed down against the end of the valve. The reading on the ramp should then be taken. The reading will be the number within the division where the helical scale or ramp intersects the edge of the collar on the body.

The threads are to be within one turn in either direction from basic but preferably within 1/4 turn from basic. Therefore the product should gage preferably between −2 and +2 on the scale with readings between −4 and +4 being acceptable. This reading will be needed as a reference for gaging the crest and root truncation of the external thread.

2. Crest truncation of external thread.—To check the crest truncation of the external thread, the gage shown in figure 9.37 is used. The gage should be placed over the threads lightly and rocked in different directions to detect out-of-roundness or off-taper. If the rock is not excessive, the plunger should be pushed down and a reading taken. If the edge of the collar on the body lies within the helical ramp at the same reading as was shown on the ramp of the pitch diameter ring gage (fig. 9.36), the crest truncation of the external thread is acceptable

3. Root truncation of external thread.—To check the root truncation of the external thread, the gage shown in figure 9.38 is used. The gage is screwed delicately onto the valve. After reaching full engagement, the gage is backed off one-half to one full turn, and the degree of looseness is compared with that of generally accepted threads. Slight looseness indicates that the gage and product bear along the length of a full and continuous or cleared thread. Considerable looseness indicates that the gage has seated or stopped on the last incomplete thread.

If the thread appears to be satisfactory after the above preliminary check, the gage is screwed onto the valve fingertight. The plunger is then pushed down and a reading taken. If the edge of the collar on the body lies within the helical ramp at the same reading as was shown on the ramp of the pitch diameter ring gage (fig. 9.36), the root truncation of the external thread is acceptable.

4. Pitch diameter of internal thread.—To check the pitch diameter of the internal thread, the threaded plug gage shown on figure 9.39 is used. This gage is known as a *primary* gage since the reading taken on the ramp will be needed for use when additional gaging is done.

Both heads are screwed in simultaneously, with the precaution that the L_8 section advances with some clearance ahead of the L_1 section to prevent locking. Both sections should be screwed in to about the same tightness. For the pitch diameter of the tapped hole to be acceptable, the upper band should not be above or below the edge of the gaging ring.

To measure the effective pitch diameter of the thread at the L_1 length, with the gage screwed into the cylinder, the hexagonal sleeve is pushed down to the face of the cylinder. A reading is then taken on the ramp at the point where it

Downloaded from http://www.everyspec.com

intersects the edge of the hexagonal sleeve.

The threads are to be within one turn in either direction from basic but preferably within ½ turn from basic. Therefore the product should gage preferably between −2 and +2 on the scale, with readings between −4 and +4 being acceptable. This reading will be needed as a reference for gaging the crest and root truncation and the maximum bore of the internal thread on the cylinder.

5. Crest truncation of internal thread.—To check the crest truncation of the internal thread, the plain plug gage shown in figure 9.40 is used.

The plug is slipped lightly into the hole and rocked in different directions to detect out-of-roundness or off-taper. If either of these conditions appears excessive, the crest should be examined visually for roughness, chips, and variations in truncation.

After this inspection, the plug is seated into the hole and the hexagonal sleeve pushed down to the face of the cylinder. If the upper edge of the hexagonal sleeve lies within the helical ramp at the same reading as was shown on the ramp of the pitch diameter plug gage (fig. 9.39), the crest truncation of the internal thread is acceptable.

6. Maximum bore of internal thread.—To check the maximum bore of the internal thread, the gage shown in figure 9.41 is used.

The plug is seated into the hole and the hexagonal sleeve pushed down to the face of the cylinder. If the upper edge of the hexagonal sleeve lies within the helical ramp at the same reading as was shown on the ramp of the pitch diameter plug gage (fig. 9.39), the maximum bore of the internal thread is acceptable.

7. Root truncation of internal thread.—To check the root truncation of the internal thread, the threaded plug gage shown on figure 9.42 is used. The gage is screwed delicately into the tapped hole of the cylinder. After reaching full engagement, the gage is backed off one-half to one full turn and the degree of looseness compared with that of generally accepted threads. Slight looseness indicates that the gage and cylinder bear along the length of a full and continuous or cleared thread. Considerable looseness indicates that the plug has seated or stopped on the last incomplete thread.

If the thread appears to be satisfactory after the above preliminary check, the gage is screwed into the cylinder fingertight. The hexagonal sleeve is then pushed down to the face of the cylinder. If the upper edge of the hexagonal sleeve lies within the helical ramp at the same reading as was shown on the ramp of the pitch diameter plug gage (fig. 9.39), the root truncation of the internal thread is acceptable.

(c) *Checking of the NGT, NGT(CI), and SGT working or inspection gages with master gages.*—The sketches of the master gages are shown on figures 9.43, 9.44, and 9.45. Gaging information is given in the notes on these figures.

2. National Gas Straight Threads, NGS.—All straight threads for inlet connections shall be NGS threads. The diameters and the form for both the external and internal threads shall conform to those for NPSM American Standard straight pipe threads for free-fitting mechanical joints (without clearance) (see table 7.6, FED-STD-H28/7. The length of engagement shall be (L_1+L_3). The seal for tightness shall be at or close to the end face of the cylinder whether it incorporates the external or the internal threads.

4. SAFETY DEVICE THREADS

The safety devices on high pressure gas cylinder valves shall be provided with right hand threads of the Unified form, 19 threads per inch.

The minimum length of engagement shall be ¼ in. The thread dimensions shall be as follows:

	Boss (external thread)		Cap (internal thread)	
	Max	Min	Min	Max
	in	in.	in	in.
Major diameter	0.6500	0.6416	0.6500	----------
Pitch diameter	.6157	.6124	.6157	0.6200
Minor diameter	.5852	----------	.5929	.6008

The safety device threads shall be designated as follows:

Boss (external thread):
.650-19 UNS-3A
MAJOR DIA .6500–.6416
PD .6157–.6124
Cap (internal thread):
.650-19 UNS-3B
MINOR DIA .5929–.6008
PD .6157–.6200

Downloaded from http://www.everyspec.com

TABLE 9.6 —*Dimensions of master setting plug gages; NGT, SGT (external threads)*

	1/4—27NGT	3/8—18NGT	1/2—18NGT	1/2—14NGT	3/4—14NGT	3/4—14NGT(C1)-1	3/4—14NGT(C1)-2	3/4—14NGT(C1)-3	3/4—14NGT(C1)-4	3/4—14SGT	1—11½NGT	1¼—11½NGT	1½—11½NGT
1	2	3	4	5	6	7	8	9	10	11	12	13	14
	in.	in.	in.	in.	in.	in.	in.	in.	in.	in.	in.	in.	in.
D_0	0.3931	0.5218	0.6564	0.8156	1.0248	1.0248	1.0427	1.0628	1.0873	1.0470	1.2832	1.6267	1.8657
D_1	.4044	.5343	.6714	.8356	1.0460	1.0460	1.0639	1.0840	1.1085	1.0971	1.3082	1.6530	1.8920
$D_{(s-p)}$	.4160	.5517	.6888	.8579	1.0683	1.0683	1.0862	1.1063	1.1308	1.1260	1.3354	1.6802	1.9192
D_{10}, approx	.4204	.5530	.6915	.8625	1.0795	1.0951	1.1130	1.1331	1.1576	1.1564	1.3457	1.6931	1.9360
E_0	.3635	.4774	.6120	.7584	.9677	.9677	.9856	1.0057	1.0302	.9852	1.2136	1.5571	1.7961
E_0—½ thd height	.3475	.4534	.5880	.7275	.9368	.9368	.9547	.9748	.9993	.9543	1.1760	1.5195	1.7585
E_1	.3748	.4899	.6270	.7784	.9889	.9889	1.0068	1.0269	1.0514	1.0353	1.2386	1.5834	1.8223
$E_{(i+p)}$	.3771	.4934	.6305	.7829	.9934	.9934	1.0113	1.0314	1.0559	1.0443	1.2440	1.5888	1.8277
E_3	.3886	.5107	.6479	.8052	1.0157	1.0268	1.0447	1.0648	1.0893	1.0731	1.2712	1.6180	1.8550
E_0—½ thd height	.3726	.4867	.6239	.7743	.9848	.9959	1.0138	1.0339	1.0584	1.0422	1.2336	1.5784	1.8174
K_0	.3339	.4329	.5676	.7013	.9106	.9106	.9285	.9486	.9731	.9234	1.1441	1.4876	1.7265
$K_{(s-p)}$	.3567	.4628	.6000	.7436	.9541	.9541	.9720	.9921	1.0166	1.0024	1.1963	1.5411	1.7800
L_1	.1800	.2000	.2400	.3200	.3390	.3390	.3390	.3390	.3390	.4008	.4000	.4200	.4200
L_3	.4022	.5333	.5733	.7486	.7676	.9461	.9461	.9461	.9461	.7030	.9217	.9417	.9417
$L_{(s-p)}$	.3652	.4777	.5177	.6772	.6962	.8747	.8747	.8747	.8747	.6316	.8347	.8547	.8547
L_{10}, approx	3/16	9/64	13/16	13/16	7/8	1 1/8	1 1/8	1 1/8	1 1/8	3/8	1	1 1/16	1 1/8
p, pitch	.03704	.05556	.05556	.07143	.07143	.07143	.07143	.07143	.07143	.07143	.08696	.08696	.08696
Chamfer 45° x min. dia	9/64	17/64	9/16	13/16	29/32	29/32	29/64	15/16	31/32	29/64	1 1/8	1 13/32	1 29/64
B, ref	.2544	.3824	.3824	.4912	.4912	.6688	.6688	.6688	.6688	.3184	.5968	.5968	.5968
M, ref	.6196	.8601	.9001	1.1684	1.1874	1.5435	1.5435	1.5435	1.5435	.9500	1.4315	1.4515	1.4531

See figure 9.35 for the explanation of all letter symbols except B and M, which are identified on figure 9.45

TABLE 9.7 —*Dimensions of master setting ring gages; NGT, SGT (internal threads)*

	1/4—27NGT	3/8—18NGT	1/2—18NGT	1/2—14NGT	3/4—14NGT	3/4—14NGT(C1)-1	3/4—14NGT(C1)-2	3/4—14NGT(C1)-3	3/4—14NGT(C1)-4	3/4—14SGT	1—11½NGT	1¼—11½NGT	1½—11½NGT
1	2	3	4	5	6	7	8	9	10	11	12	13	14
	in.	in.	in.	in.	in.	in.	in.	in.	in.	in.	in.	in.	in.
D_0	0.3931	0.5218	0.6564	0.8156	1.0248	1.0248	(*)	(*)	(*)	1.0470	1.2832	1.6267	1.8657
D_1	.4044	.5343	.6714	.8356	1.0460	1.0460	(*)	(*)	(*)	1.0971	1.3082	1.6530	1.8920
$D_{(s-p)}$	.4160	.5517	.6888	.8579	1.0683	1.0683	(*)	(*)	(*)	1.1260	1.3354	1.6802	1.9192
D_9	.3815	.5044	.6390	.7933	1.0025	1.0025	(*)	(*)	(*)	1.0024	1.2560	1.5995	1.8385
E_0	.3635	.4774	.6120	.7584	.9677	.9677	(*)	(*)	(*)	.9852	1.2136	1.5571	1.7961
E_1	.3748	.4899	.6270	.7784	.9889	.9889	(*)	(*)	(*)	1.0353	1.2386	1.5834	1.8223
E_3	.3568	.4670	.6016	.7450	.9543	.9543	(*)	(*)	(*)	.9474	1.1973	1.5408	1.7798
E_9	.3520	.4601	.5947	.7361	.9454	.9454	(*)	(*)	(*)	.9295	1.1864	1.5299	1.7689
E_0+½ thd height	.3680	.4841	.6187	.7670	.9763	.9763	(*)	(*)	(*)	.9604	1.2240	1.5675	1.8065
$E_{(s-1/4p)}$	.3601	.4721	.6069	.7517	.9610	.9610	(*)	(*)	(*)	.9607	1.2054	1.5489	1.7879
K_1	.3451	.4454	.5826	.7213	.9318	.9318	(*)	(*)	(*)	.9325	1.1691	1.5139	1.7528
K_3	.3269	.4225	.5572	.6879	.8972	.8972	(*)	(*)	(*)	.8856	1.1278	1.4713	1.7102
K_9	.3223	.4156	.5503	.6790	.8883	.8883	(*)	(*)	(*)	.8377	1.1169	1.4604	1.6993
L_1	.1800	.2000	.2400	.3200	.3390	.3390	(*)	(*)	(*)	.4008	.4000	.4200	.4200
L_1+L_3	.2911	.3667	.4067	.5343	.5533	.5533	(*)	(*)	(*)	.7030	.6609	.6809	.6809
L_3	.4022	.5333	.5733	.7486	.7676	.9461	(*)	(*)	(*)	.7030	.9217	.9417	.9417
$L_{(s-p)}$	.3652	.4777	.5177	.6772	.6962	.8747	(*)	(*)	(*)	.6316	.8347	.8547	.8547
L_9	.3652	.4778	.5178	.6771	.8961	.9461	(*)	(*)	(*)	.7030	.8348	.8548	.8548
$3\frac{1}{2}p$	.1296	.1944	.1944	.2500	.2500	.2500	(*)	(*)	(*)	.2500	.3043	.3043	.3043
$1\frac{1}{2}p$	.0556	.0833	.0833	.1071	.1071	.1071	(*)	(*)	(*)	.1071	.1304	.1304	.1304
p, pitch	.03704	.05556	.05556	.07143	.07143	.07143	(*)	(*)	(*)	.07143	.08696	.08696	.08696
C'sink 90° x max. dia	13/32	9/16	11/16	7/8	13/16	13/16	(*)	(*)	(*)	13/64	13/16	1 29/64	1 29/32
G	9/32	9/16	7/16	9/16	11/16	11/16	(*)	(*)	(*)	11/16	11/16	1	1 1/32
A, ref	.5812	.8026	.8426	1.0979	1.1153	1.3653	(*)	(*)	(*)	1.0390	1.3468	1.3668	1.3668
B, ref	.2160	.3248	.3248	.4208	.4192	.4192	(*)	(*)	(*)	.3360	.5120	.5120	.5120

See figure 9.35 for the explanation of all letter symbols except A and B, which are identified on figure 9.44

*Not applicable.

Downloaded from http://www.everyspec.com

TABLE 9.8 --*Master setting gage tolerances; NGT, SGT*

Thread designation	Tolerance on pitch diameter at gaging notch of plug gage	Tolerance * on lead in L_1 length of gage		Tolerance * on half angle		Tolerance * on taper in L_1 length of gage		Tolerance on major diameter of plug gage at gaging notch	Tolerance on minor diameter of ring gage at large end
		Plugs	Rings	Plugs	Rings	Plugs	Rings		
1	2	3	4	5	6	7	8	9	10
	in ±	in ±	in ±	min ±	min ±	in +	in	in −	in +
1/16—27NGT	0.0002	0.0002	0.0003	15	20	0.0003	0.0006	0.0004	0.0004
1/8—18NGT	.0002	.0002	.0003	15	20	.0004	.0007	.0006	.0006
3/16—18NGT	.0002	.0002	.0003	15	20	.0004	.0007	.0006	.0006
1/4—14NGT	.0003	.0002	.0003	10	15	.0006	.0009	.0010	.0010
3/8—14NGT	.0003	.0002	.0003	10	15	.0006	.0009	.0010	.0010
1/2—14NGT(CI)	.0003	.0002	.0003	10	15	.0006	.0009	.0010	.0010
3/4—14SGT	.0003	.0002	.0003	10	15	.0006	.0009	.0010	.0010
1—11½NGT	.0003	.0003	.0004	10	15	.0008	.0012	.0010	.0010
1¼—11½NGT	.0003	.0003	.0004	10	15	.0008	.0012	.0010	.0010
1½—11½NGT	.0003	.0003	.0004	10	15	.0008	.0012	.0010	.0010

* The lead and taper on plug and ring gages shall be measured along the pitch line, omitting the imperfect threads at each end

* In solving for the correction in diameter for angle deviations, the average deviation in half angle for the two sides of thread regardless of their signs should be taken

NOTES.—Maximum possible interchange standoff, any ring against any plug other than its master plug, may occur when taper deviations are zero and all other dimensions are at opposite extreme tolerance limits

Interchange standoff, any ring against any plug other than its master plug, may occur when all dimensions including taper are midway between opposite tolerance limits

The large end of the ring gage shall be flush with the gaging notch of its master plug gage within ±0.002 in when assembled handtight

The tolerance for the length L_1 from small end to gaging notch of the plug gage shall be +0.000, −0.001 in

The tolerance for the overall thread length L_2 of the plug gage shall be +0.005, −0.000 in

The tolerance for the thickness L_3 of the ring gage shall be +0.001, −0.000 in.

Downloaded from http://www.everyspec.com

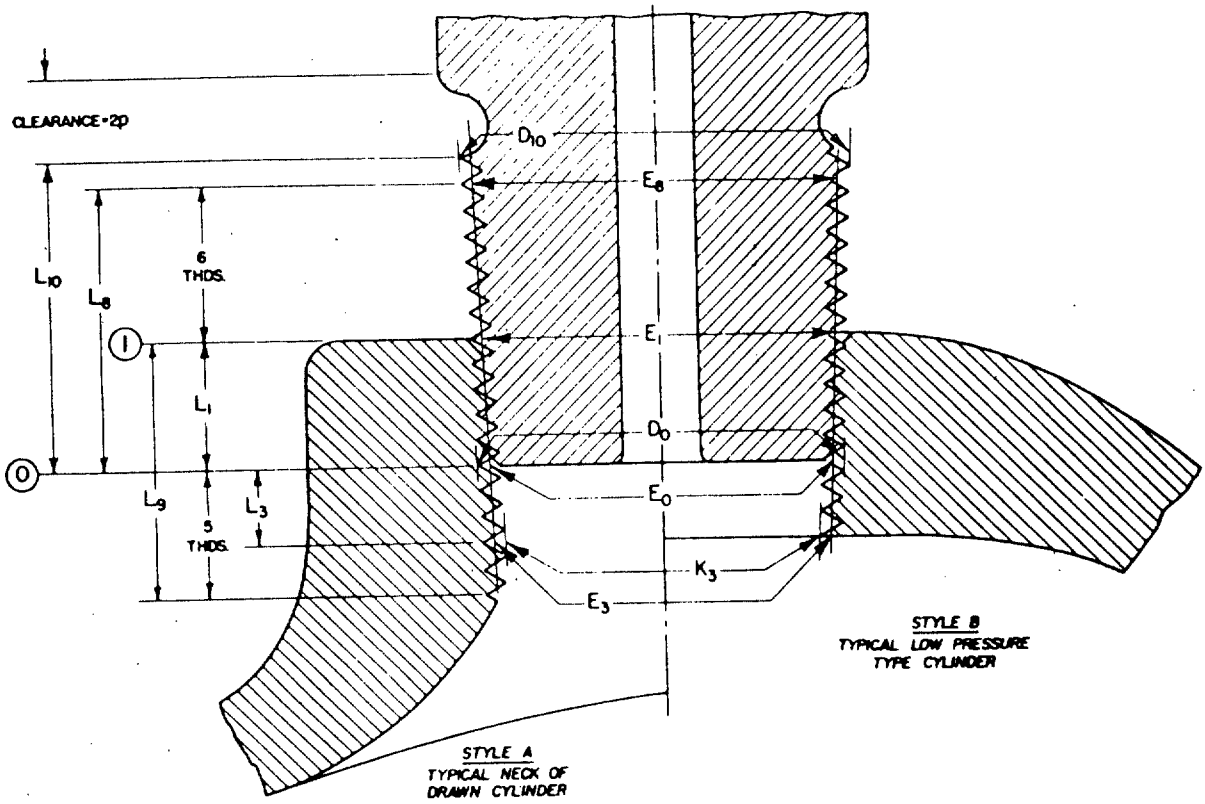

D • MAJOR DIAMETER
E • PITCH DIAMETER
K • MINOR DIAMETER (BORE)
(AT REFERENCE PLANE INDICATED)

L_1 • STANDARD HANDTIGHT ENGAGEMENT
L_3 • 3 THREADS (FOR WRENCHING)
L_8 • FULL EXTERNAL THREADS
L_9 • FULL ROOTS ON INTERNAL THREADS
L_{10} • OVERALL EXTERNAL THREADS
(0) • REFERENCE PLANE FOR GAGING EXTERNAL THREADS
(1) • REFERENCE PLANE FOR GAGING INTERNAL THREADS

FIGURE 9.35 —*Relationship between internal and external thread dimensions of NGT, NGT(Cl), and SGT threads.*

Downloaded from http://www.everyspec.com

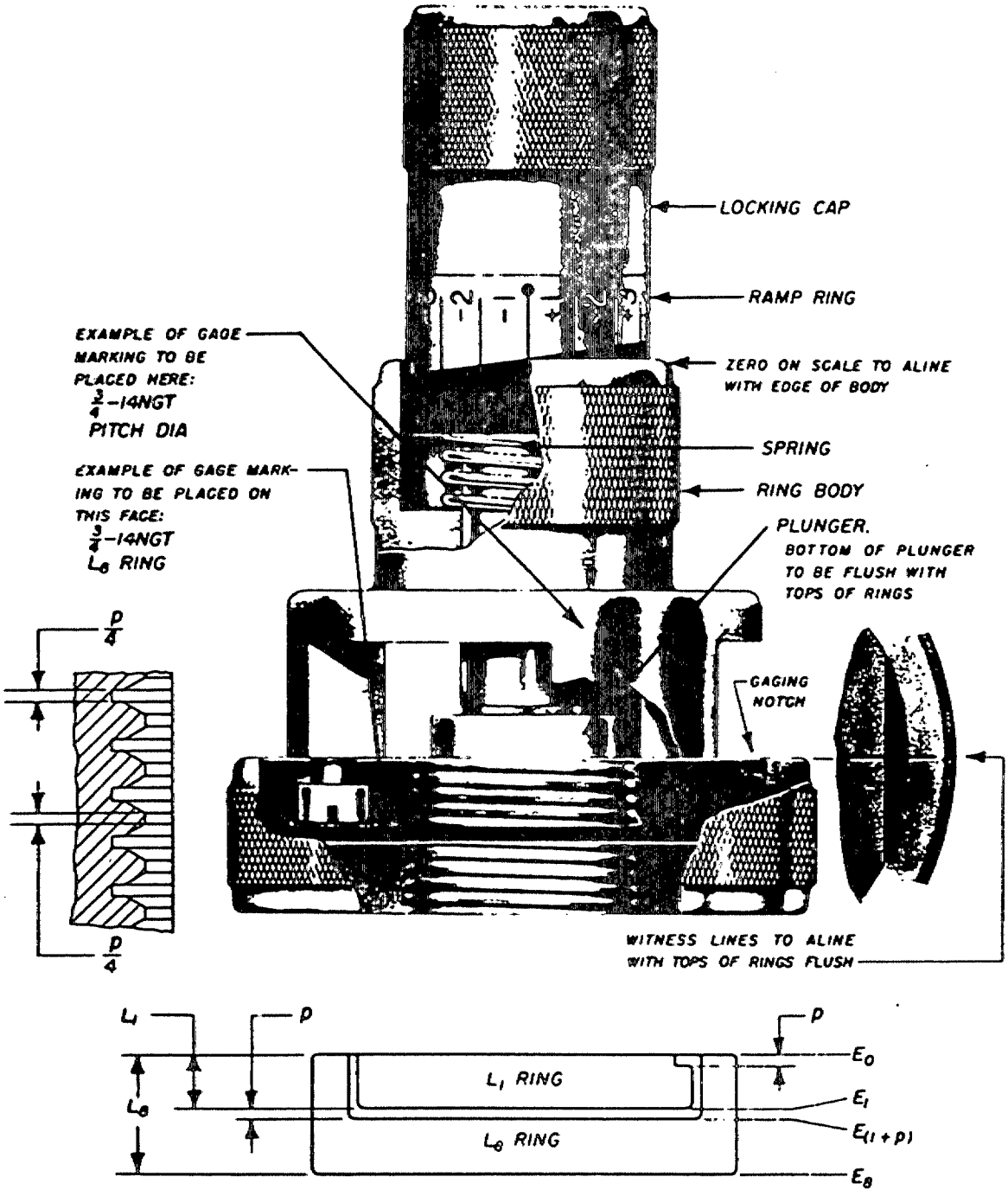

FIGURE 9.36 *Pitch diameter ring gages NGT, SGT.*

Downloaded from http://www.everyspec.com

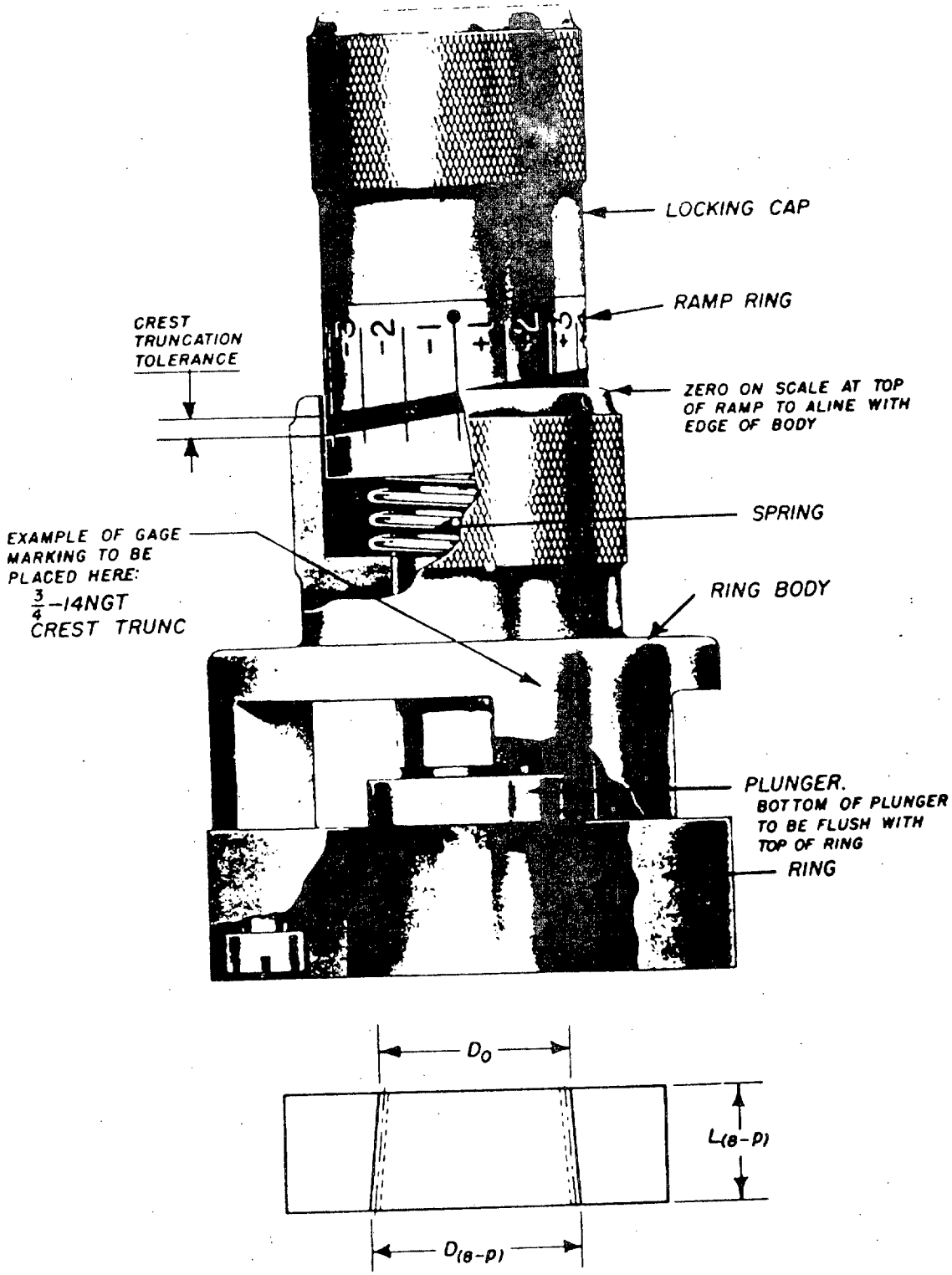

FIGURE 9.37 *Crest truncation ring gage, NGT, SGT.*

Downloaded from http://www.everyspec.com

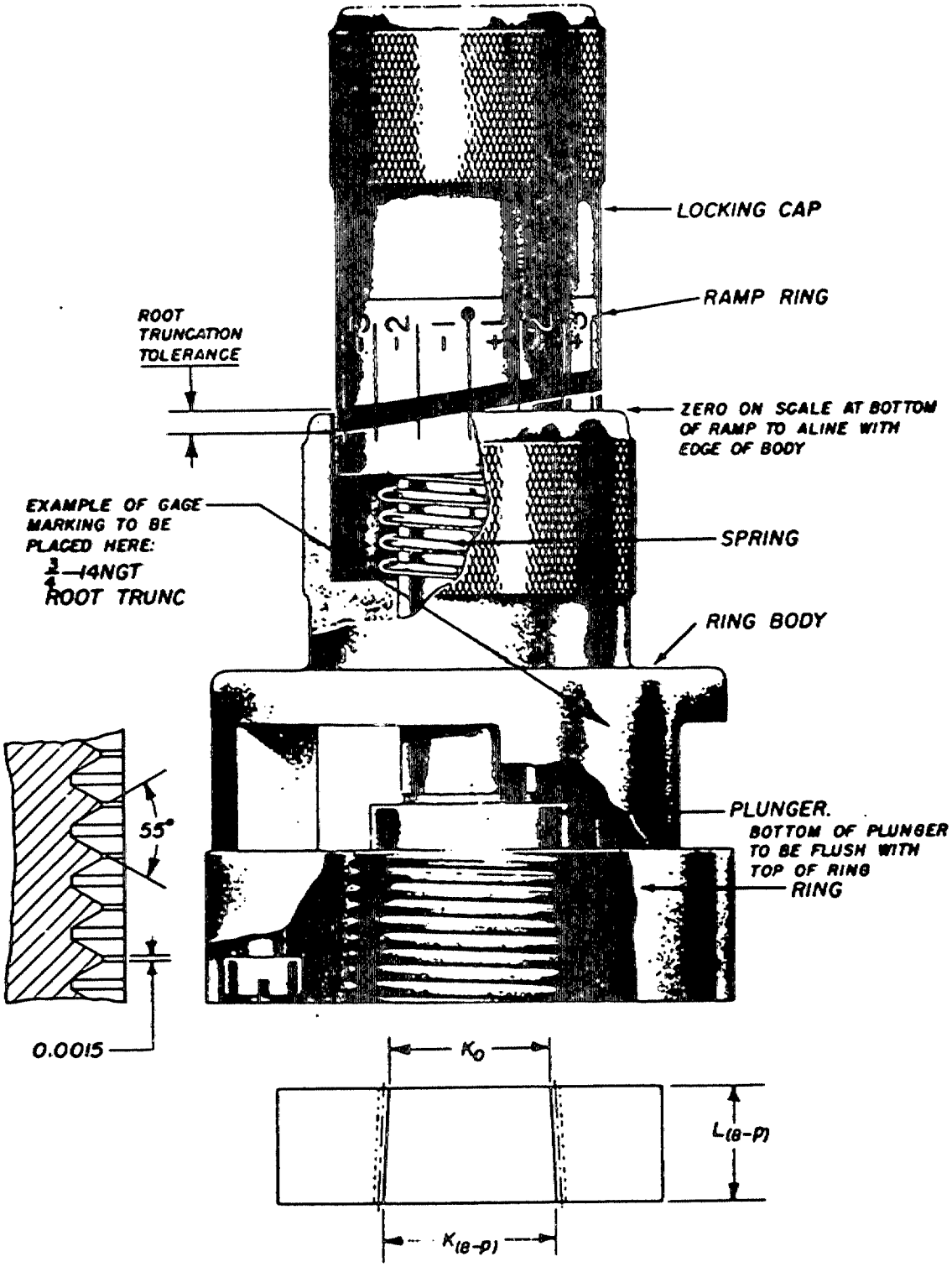

FIGURE 9.38 *Root truncation ring gage, NGT, SGT.*

Downloaded from http://www.everyspec.com

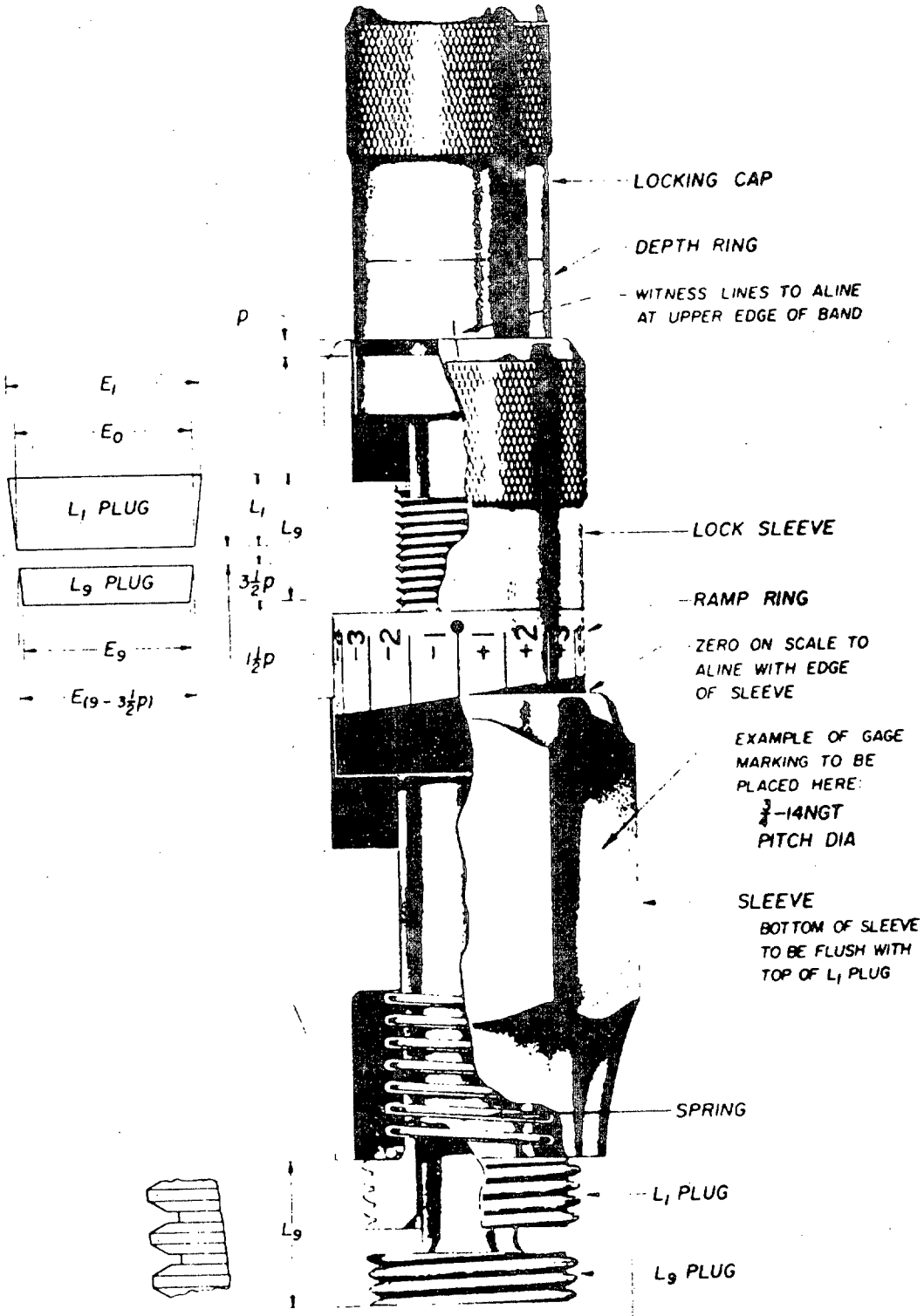

FIGURE 9.39 - *Pitch diameter plug gage; NGT, SGT.*

Downloaded from http://www.everyspec.com

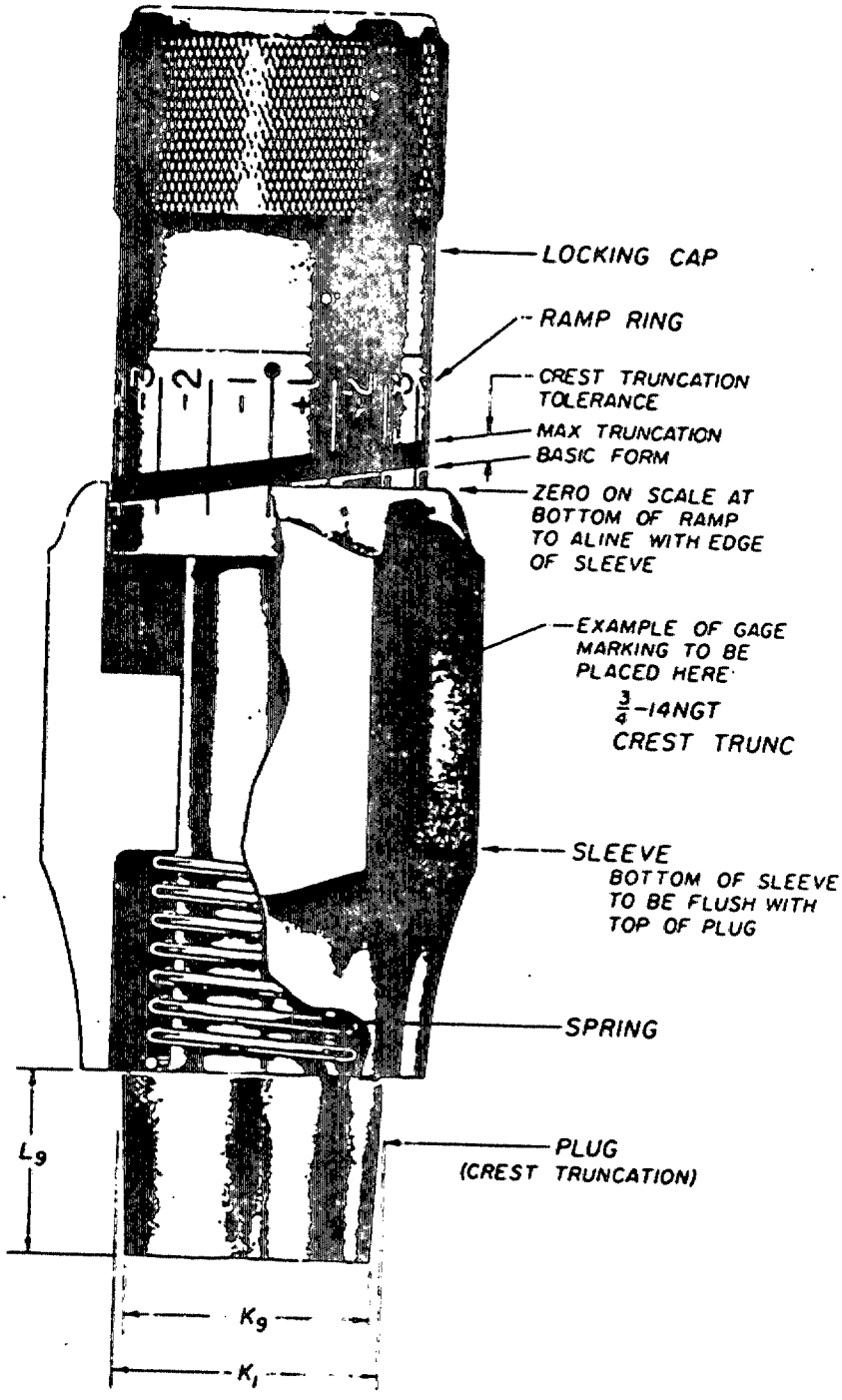

FIGURE 9.40 *Crest truncation plug gage, NGT, SGT.*

Downloaded from http://www.everyspec.com

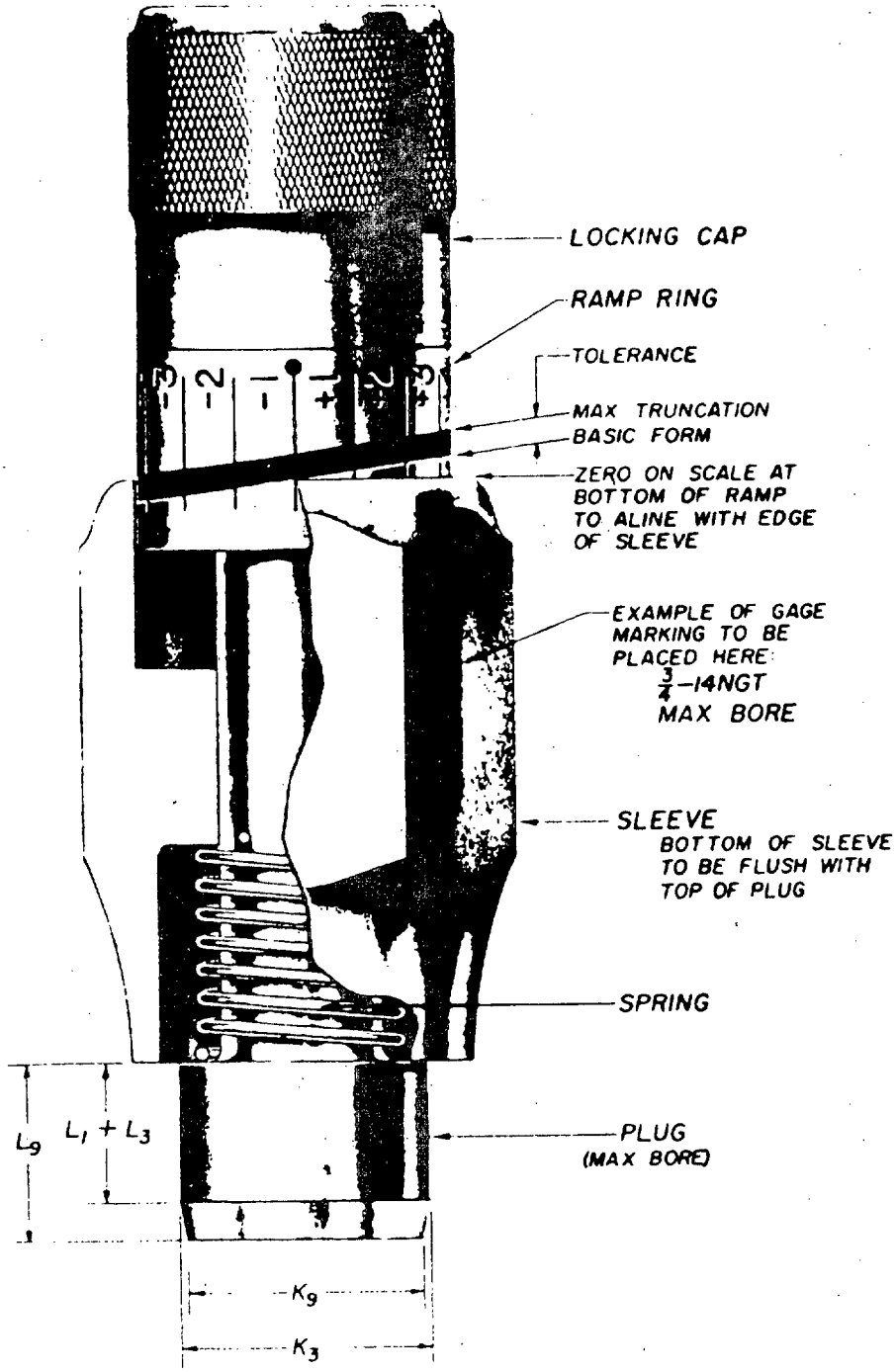

FIGURE 9.41 *Maximum bore plug gage. NGT, SGT.*

Downloaded from http://www.everyspec.com

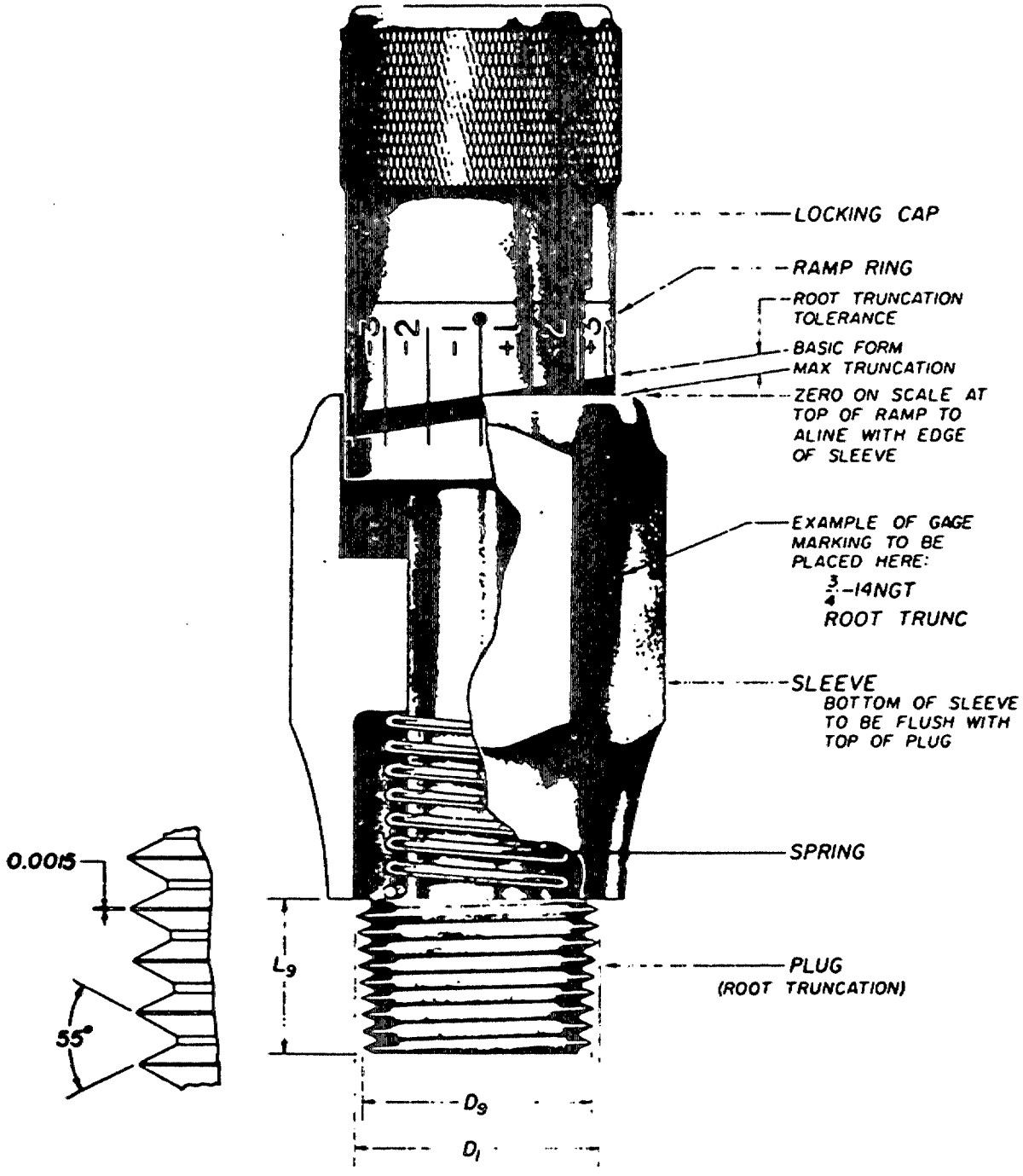

FIGURE 9.42 — *Root truncation plug gage, NGT, SGT.*

Downloaded from http://www.everyspec.com

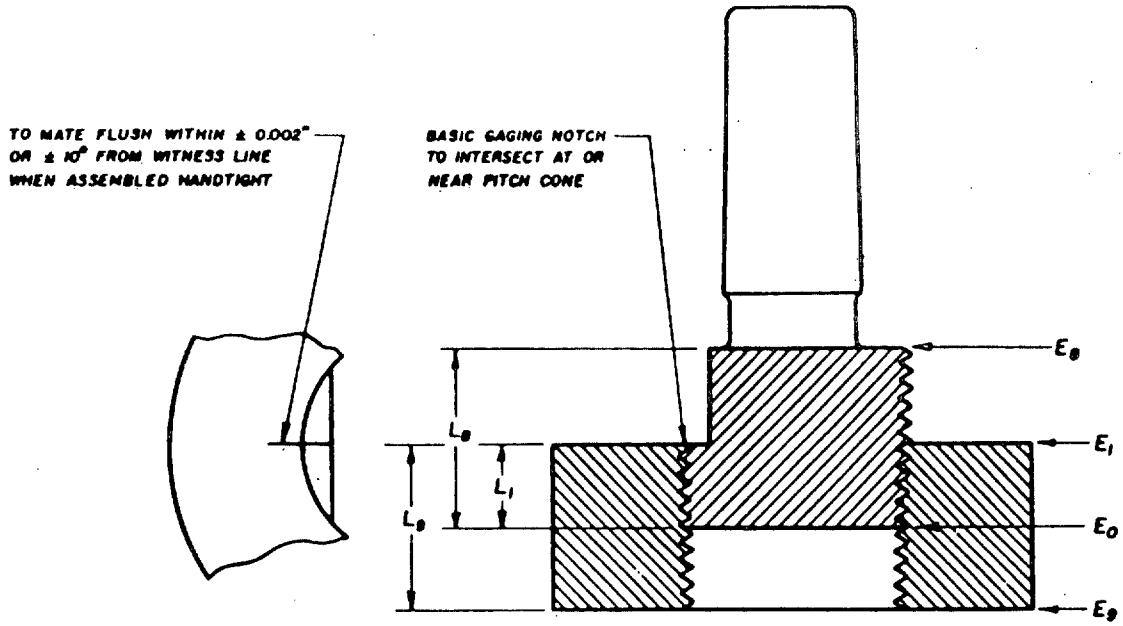

Roots of threads on plug and ring to be undercut to p/4 max to clear sharp V 60° thread.
Gages to be calibrated to allow for deviations in flank angle, taper, lead, and pitch diameter. Maximum cumulative tolerance from true basic = 1/16 turn.
Master setting plug is for setting L_1 and L_9 ring gages shown on figure 9.36. Master setting ring is for setting L_1 and L_9 plug gages shown on figure 9.30
See tables 9.6 and 9.7 for dimensions, table 9.8 for tolerances.

FIGURE 9.43—*Master setting plug and ring gages for setting pitch diameter of threaded plug and ring gages; NGT, SGT.*

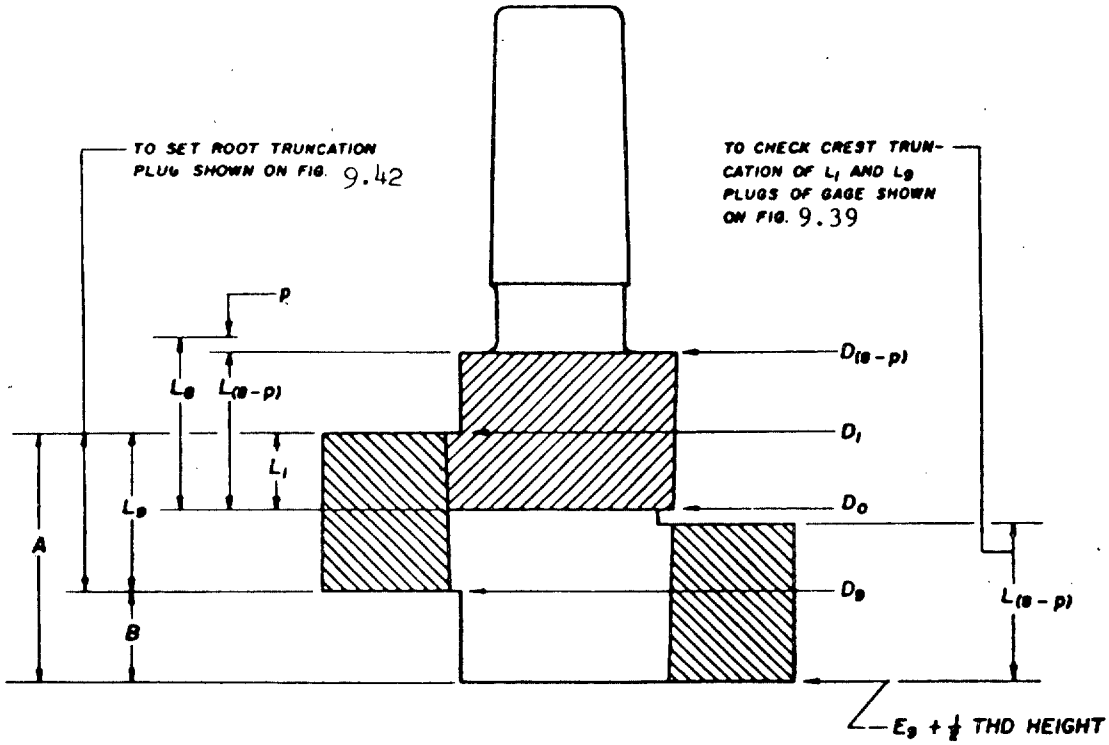

Master setting plug is for setting crest truncation ring shown on figure 9.37 Master setting ring is for setting root truncation plug shown on figure 9.42
and to check crest truncation of L_1 and L_9 plugs of gage shown on figure 9.39.
See tables 9.6 and 9.7 for dimensions, table 9.8 for tolerances

FIGURE 9.44 —*Master setting plug and ring gages for setting and checking major diameters of plug and ring gages; NGT, SGT.*

Downloaded from http://www.everyspec.com

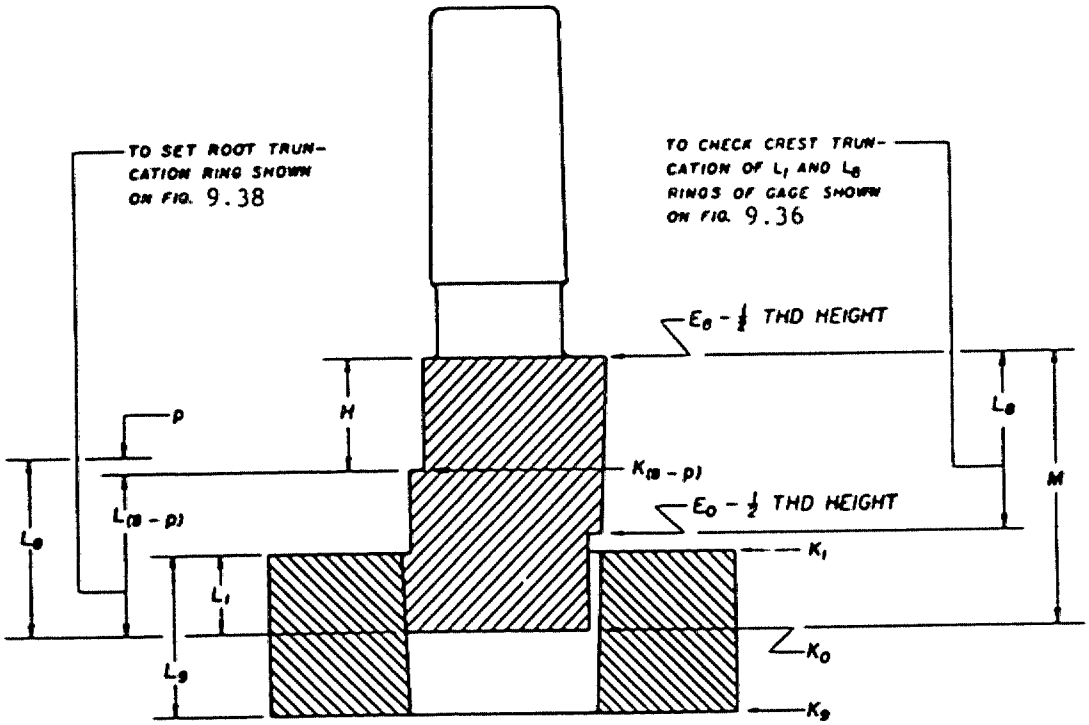

Master setting plug is for setting root truncation ring shown on figure 9.38 and to check crest truncation of L_1 and L_8 rings of gage shown on figure 9.36
Master setting ring is for setting crest truncation plug shown on figure 9.40 and maximum bore plug shown on figure 9.41
See tables 9.6 and 9.7 for dimensions, table 9.8 for tolerances

FIGURE 9.45 – *Master setting plug and ring gages for setting and checking minor diameters of plug and ring gages; NGT, SGT.*

Downloaded from http://www.everyspec.com

INSTRUCTIONS: In a continuing effort to make our standardization documents better, the DoD provides this form for use in submitting comments and suggestions for improvements. All users of military standardization documents are invited to provide suggestions. This form may be detached, folded along the lines indicated, taped along the loose edge *(DO NOT STAPLE)*, and mailed. In block 5, be as specific as possible about particular problem areas such as wording which required interpretation, was too rigid, restrictive, loose, ambiguous, or was incompatible, and give proposed wording changes which would alleviate the problems. Enter in block 6 any remarks not related to a specific paragraph of the document. If block 7 is filled out, an acknowledgement will be mailed to you within 30 days to let you know that your comments were received and are being considered.

NOTE: This form may not be used to request copies of documents, nor to request waivers, deviations, or clarification of specification requirements on current contracts. Comments submitted on this form do not constitute or imply authorization to waive any portion of the referenced document*(s)* or to amend contractual requirements.

(Fold along this line)

(Fold along this line)

DEPARTMENT OF THE ARMY

NO POSTAGE NECESSARY IF MAILED IN THE UNITED STATES

OFFICIAL BUSINESS
PENALTY FOR PRIVATE USE $300

BUSINESS REPLY MAIL
FIRST CLASS PERMIT NO 12062 WASHINGTON D C

POSTAGE WILL BE PAID BY THE DEPARTMENT OF THE ARMY

Commander
Defense Industrial Supply Center
Attn: DISC ES
700 Robbins Ave
Phila PA 19111

Downloaded from http://www.everyspec.com

STANDARDIZATION DOCUMENT IMPROVEMENT PROPOSAL

(See Instructions – Reverse Side)

1. DOCUMENT NUMBER

2. DOCUMENT TITLE

3a. NAME OF SUBMITTING ORGANIZATION

4. TYPE OF ORGANIZATION *(Mark one)*

- ☐ VENDOR
- ☐ USER
- ☐ MANUFACTURER
- ☐ OTHER *(Specify)*: _____

b. ADDRESS *(Street, City, State, ZIP Code)*

5. PROBLEM AREAS

a. Paragraph Number and Wording:

b. Recommended Wording:

c. Reason/Rationale for Recommendation:

6. REMARKS

7a. NAME OF SUBMITTER *(Last, First, MI)* – Optional

b. WORK TELEPHONE NUMBER *(Include Area Code)* – Optional

c. MAILING ADDRESS *(Street, City, State, ZIP Code)* – Optional

8. DATE OF SUBMISSION *(YYMMDD)*

(TO DETACH THIS FORM, CUT ALONG THIS LINE.)

DD FORM 82 MAR 1426

PREVIOUS EDITION IS OBSOLETE.