Downloaded from http://www.everyspec.com

[INCH-POUND]
FED-STD-809
April 1, 1998

FEDERAL STANDARD

NEUTRALIZATION

AND REPAIR OF GSA

APPROVED CONTAINERS

FSC 7110

Downloaded from http://www.everyspec.com

GENERAL SERVICES ADMINISTRATION
Washington, DC 20301

Neutralization and Repair of GSA Approved Containers.

1. This Federal Standard is approved by the Commissioner, Federal Supply Service, and General Services Administration (GSA), for the use of all Federal Agencies.

.

Downloaded from http://www.everyspec.com

(This page intentionally left blank)

Downloaded from http://www.everyspec.com

FOREWORD

This standard establishes requirements for the neutralization and repair of GSA approved containers and vault doors.

.

Downloaded from http://www.everyspec.com

(This page intentionally left blank)

Downloaded from http://www.everyspec.com

CONTENTS

Page

1. SCOPE 1

2. REFERENCED DOCUMENTS 2
   2.1 Government Documents 2
   2.2 Other Government Documents 2

3. DEFINITIONS 3

4. GENERAL REQUIREMENTS 4
   4.1 Opening Techniques 4
   4.2 Repair 5

5. DETAILED REQUIREMENTS 6
   5.1 Procedures for Neutralizing Black Label or Red Label Containers - Method 1 6
   5.2 Tools and Equipment 6
   5.3 Layout and Marking Procedures 6
   5.4 Drilling Procedure 7
   5.5 Repair Procedure 7
   5.6 Safety Precautions 7
   5.7 Security Precautions 7
   5.8 Procedures for Neutralizing Red Label Class 6 Containers - Method 2 7
   5.9 Tools and Equipment 8
   5.10 Layout and Marking Procedures 8
   5.11 Cutting Procedure 8
   5.12 Repair Procedure 9
   5.13 Safety Precautions 9
   5.14 Security Precautions 9
   5.15 Procedures for Neutralizing Red Label Class 5 and 6 Security Containers - Method 3 9
   5.16 Tools and Equipment 10
   5.17 Layout and Marking Procedures 11
   5.18 Cutting Procedure 11
   5.19 Repair Procedure 11
   5.20 Safety Precautions 12
   5.21 Security Precautions 12

.

Downloaded from http://www.everyspec.com

CONTENTS

Page

6. NOTES 13
6.1 Background Information 13
6.2 Additional Information or Points of Contact 13

FIGURES
1. Security container and label 15
2. Container measurements 16
3. Container measurements 17
4. Builder's circular saw 18
5. Classes and sizes of security containers, showing cutting marks locations 19

.

Downloaded from http://www.everyspec.com

1. SCOPE

1. Scope. This standard establishes requirements for the neutralization and repair of GSA approved containers and vault doors.

.

Downloaded from http://www.everyspec.com

2. REFERENCED DOCUMENTS

2.1 Government documents. The following specifications form a part of this standard to the extent specified herein.

SPECIFICATIONS
FEDERAL

AA-F-358	- Security filing cabinets.
AA-F-363	- Map and plans and general purpose cabinets.
AA-C-2859	- Weapons containers.
AA-V-2737	- Modular vault panels.
AA-D-600 and AA-D-2757	- Security vault doors.
FF-L-2740	- Combination locks which secure classified material.
AA-F-357	- Insulated security filing cabinets.
AA-F-2815	- Class 7 security filing cabinets.
AA-S-1518	- Tool-resistant security containers.

Copies of military specifications and standards required by contractors in connection with specific procurement functions are obtained from the Standardization Documents Order Desk, Building 4D, 700 Robbins Avenue, Philadelphia, PA 19111-5094.

2.2 Other Government Documents. The following other Government documents form a part of this standard to the extent specified herein.

NAVY/MARINE CORPS

OPNAV 5510/21	- Security Container Records Form.

AIR FORCE

AFTO Form 36	- Maintenance Record for Security-Type Equipment.

GENERAL SERVICES ADMINISTRATION

Optional Form 89	- Security Container Records Form.

Downloaded from http://www.everyspec.com

3. DEFINITIONS

3.1 The terms used in this standard are commonly understood by the technical community to which they apply and are not used here in such a way to introduce new or limited meanings.

.

Downloaded from http://www.everyspec.com

4. GENERAL REQUIREMENTS

4.1 Opening Techniques. In order to maintain the GSA label on a container or vault door, one of the following procedures must be used for opening and repair. Table 1 identifies appropriate methods for use on various GSA approved security equipment.

1. Drilling. This procedure involves drilling into the combination lock to manipulate lock components to allow retraction of the lock bolt (Method 1).
2. Hole saw. This procedure involves using a drill and hole saw to cut the drawer face and drawer bolts (Method 2).
3. Cut-off saw. This procedure involves using a circular saw and abrasive metal cut-off blades to cut the drawer face and drawer bolts (Method 3).

Table 1. Opening and Repair Procedures

GSA Class	Label Color	Door/Container Type	Opening Method	Repair Method
All	Black	All	1	1A
5	Red	Filing Cabinet	1,3	1B,3
6	Red	Filing Cabinet	1,2,3	1B,2,3
7	Green	Filing Cabinet	1,2,3	1B,2,3
5 & 6	Red	Map & Plans/General Purpose	1	1B
5	Red	Weapons Container	1	1B
5	Blue	Info Processing System	1	1B
5	Red	Armory Vault Door	1	1B
5 & 8	Red	Vault Door	1	1B

4.1.1 GSA contracts require manufacturers to provide warranties. During the period of the warranty (generally one year from the date of manufacture) if a lock-out occurs due to failure of the locking system, the Government has the right to require the container manufacturer to provide access to the container contents within 24 hours. This provision applies in CONUS only. Before attempting neutralization procedures on containers or vault doors, contact the manufacturer concerning warranty provisions and provide the serial number and date of manufacture. Contact GSA for further information regarding warranty provisions.

4.1.2 Neutralization of lockouts or repairs of any damage that affects the integrity of a security container approved for storage of classified material shall be done only by authorized or continuously escorted personnel specifically trained in the approved methods.

.

Downloaded from http://www.everyspec.com

4.1.3 Whenever a security container is serviced or repaired, the work must be logged using Security Container Records Form OPNAV 5510/21 (Navy/Marine Corps), AFTO Form 36 (Air Force), or Optional Form 89.

4.2 Repair. GSA approved containers and vault doors that have been opened or repaired in a manner other than as described herein are not considered to have been restored to their original state of security integrity. The "Test Certification" label on the inside of the locking drawer or door, and the "General Services Administration Approved Security Container/Vault Door" label on the outside of the container/door will be removed.

4.2.1 With the exception of frames bent through application of extraordinary stress, a GSA approved security container or vault door is considered to have been restored to its original state of security integrity if:

(a) All damaged or altered parts (e.g., locking drawer, drawer head, etc.) are replaced with new or cannibalized parts;

(b) It has been drilled immediately adjacent to or through the dial ring, a replacement lock meeting FF-L-2740 is used (weapons containers and armory vault doors may use a lock meeting UL 768, Group 1; Class 6 field safes may use a lock meeting UL768, Group 1R), and the drilled hole is repaired with:

1. Method 1A - A tapered, hardened, tool-steel pin, steel dowel, drill bit, or bearing.

2. Method 1B - A carbide-center mild steel pin with a diameter slightly larger than the hole, and of such length that when driven into the hole there shall remain at each end of the pin a shallow recess not less than 1/8 inch nor more than 3/16 inch deep to permit the acceptance of substantial welds. The pin is welded both on the inside and outside surfaces. The outside of the drawer head or door must then be puttied, sanded, and repainted in such a way that no visible evidence of the hole or its repair remains on the outer surface.

(c) It has had the bolts cut using a hole saw (Method 2) or cut-off saw (Method 3). The lock is replaced with one meeting FF-L-2740, and the drawer head is replaced.

.

Downloaded from http://www.everyspec.com

5. DETAILED REQUIREMENTS

5.1 Procedures for Neutralizing Black Label or Red Label Containers - Method 1. This method attacks the lock directly. It is the only method approved for neutralization of lock-outs on GSA door-type containers and GSA vault doors, which allows for an authorized repair of the drilled door. It may also be used on drawer-type containers, especially black label containers for which replacement parts are not available.

5.1.1 This procedure is recommended for opening black label containers, and those red label containers for which Methods 2 and 3 are not appropriate. Some black label containers and all red, green, and blue label containers have carbide-matrix or other hardplates which are not easily drillable, even with carbide-tipped drill bits. Diamond-tipped core drills are more effective on these hardplates.

5.2 Tools and Equipment. Tools and equipment needed to perform this procedure include:

1. Tape measure
2. Center punch
3. Heavy duty drill motor
4. High-speed steel or cobalt drill bits, ¼” diameter x 4” long (drill bits 6” long may be needed on some containers)*
5. Carbide-tipped drill bits, ¼” diameter x 4” long (drill bits 6” long may be needed on some containers)*
6. Diamond-tipped core drills (depending on the hardplate) **, ¼” diameter x 4” long (drill bits 6” long may be needed on some containers)*
7. A lever-type or a fixed drill rig
8. A borescope***
9. An ice pick or similar sharp probe
10. Safety goggles

* Number of drill bits needed will vary with specific tools used, type of hardplate encountered, and operator experience.

** Use of diamond-tipped core drills requires a fixed drill rig.

*** Borescope must fit within the hole drilled, and must be appropriate for the approach to opening the lock. Some approaches do not require a borescope.

5.3 Layout and Marking Procedures. The hole must be within the area covered by the dial ring. Removal of the dial and dial ring facilitates accurate measurement and marking of the drill point, and drilling of the hole. The precise location of the drill point will depend on the container, the lock being neutralized and the approach used (drilling off the fence, scoping the wheels, etc.). For information on where to drill, or any other specifics of this method, call the DoD Lock Program Hotline (see phone number on page 13).

.

Downloaded from http://www.everyspec.com

5.4 Drilling Procedure. Attach the drill rig to the container according to the drill rig manufacturer's instructions. Drill through the outer skin of the drawer or door with a high-speed steel or cobalt drill bit. Use a pressure rig, either fixed or lever-type, with a carbide-tipped drill bit to penetrate the hardplate. If carbide-tipped drill bits cannot penetrate the hardplate, use a diamond-tipped core drill with a fixed drill rig. After exiting the hardplate, use a high-speed steel or cobalt drill bit to complete the drilling into the lock case. Manipulate internal components of the lock to retract its bolt, so the container's handle can retract the boltwork.

5.5 Repair Procedure. Repair the drilled hole with either: Method 1A for all BLACK label containers, using a tapered, hardened, tool-steel pin, a steel dowel, drill bit, or bearing; Method 1B for all RED, BLUE, or GREEN label containers, using a carbide-center, mild steel pin. Use a diameter slightly larger than the hole, and of such length that when driven into the hole there shall remain at each end of the pin a shallow recess not less than 1/8-inch nor more than 3/16-inch deep, to permit the acceptance of substantial welds. The pin is welded both on the inside and outside surfaces. The outside of the drawer head or door must then be puttied, sanded, and repainted in such a way that no visible evidence of the hole or its repair remains on the outer surface.

5.6 Safety Precautions. All safety precautions should be taken to prevent injury during this procedure. Possible hazards include, but are not limited to:

1. Hot or sharp surfaces and edges.
2. Hot drill bits and metal chips.
3. Drill bit binding in hole.
4. Pressure rig becoming detached from container.

5.7 Security Precautions. The classified material custodian (or alternate) for the container being neutralized, should be present during this procedure.

5.8 Procedures for Neutralizing Red Label Class 6 Containers - Method 2. Procedures to neutralize lock-outs on Class 6 GSA security containers purchased under Federal Specification AA-F-358G, and Class 7 GSA security containers purchased under Fed Spec AA-F-2815, follow. GSA approved Class 6 security filing containers purchased after October 1990 meet the requirements of Fed Spec AA-F-358G. All GSA approved Class 7 security filing containers meet the requirements of Fed Spec AA-F-2815. Due to the increased covert entry resistance of these containers, traditional lock-out neutralization techniques may not be cost-effective.

5.8.1 Containers purchased under Fed Spec AA-F-358G are differentiated from earlier models by inspecting the GSA label attached to the face of the container. GSA labels on containers purchased before October 1990 are silver with BLACK lettering. Labels on containers purchased after that date are silver with RED lettering. Containers purchased under Fed Spec AA-F-2815 (Class 7 containers) are differentiated from all other containers by the fact that their GSA Labels are silver with GREEN lettering (see Figure 1).

.

Downloaded from http://www.everyspec.com

5.8.1.1 Before attempting neutralization procedures on containers purchased under Fed Spec AA-F-358G, contact the manufacturer concerning warranty provisions. Provide the container serial number and date of manufacture.

5.8.1.2 This procedure, for Class 6 red label and Class 7 green label containers only, is presented as an alternative to the saw procedure described as Method 3. The sawing method creates dust and debris and so may not be appropriate for some situations.

5.8.1.3 The carbide-tipped hole saws used in this procedure may not be readily available. The procedure does not require previous locksmith or safe-opening experience. The technician will cut through the face of the drawer-head and continue through the locking bolts. Each hole saw cut will remove a section of a locking bolt. This will allow the drawer handle to be rotated to retract the bolt ends. This also allows the locking drawer to be opened without damaging the lock or the rest of the container. Repair involves replacing the control drawer-head. Information on obtaining a replacement drawer-head is available from the DoD Lock Program (see phone number on page 13).

5.9 Tools and Equipment. Tools and equipment needed to perform this procedure include:

1. Heavy duty drill motor
2. Center punch
3. Two each 1-1/4-inch carbide tipped hole saws*
4. Safety goggles

*Number of hole saws listed is approximate and will vary with specific tools used and operator experience.

5.10 Layout and Marking Procedures.

1. Identify the container as a Class 6 red label or Class 7 green label, GSA approved security filing container (see Figure 1). The face of a Class 6 or Class 7 container will be approximately 1/8-inch thick or less, and will overlap the front of the container.
2. Determine, from the external label, whether it was made by Mosler or Hamilton Products Group. Refer to Figure 1.
3. Figures 2 and 3 are not actual size. They provide measurements for each make of Class 6 or Class 7 container, to locate the holes to be drilled. Using the measurements from the appropriate drawing, locate and centerpunch for the hole saw's pilot drill. Note: Use the figures as measurements only, or contact the DoD Lock Program Hotline for questions or problems (see page 13).
4. Spread a drop cloth in front of the safe to catch chips from cutting hole in drawer face.

5.11 Cutting Procedure.

1. At one of the center punched locations, use the hole saw with a pilot drill and cut through the face of the drawer-head.

.

Downloaded from http://www.everyspec.com

2. Inspect the hole to verify that it is aligned with the locking bolt to be cut.
3. Using the hole in the drawer face for support, cut through the locking bolt. Do not engage the trigger lock on the drill motor. Move the drill slightly horizontally and vertically to create a slightly larger hole. This reduces the chance that the hole saw will bind.
4. Repeat these steps on the other side to cut the other bolt. Turn the handle to retract the boltwork.

Note: If the bolt linkage is severed during the cutting procedure, retract the bolts with a screwdriver or similar tool.

5.12 Repair Procedure.

1. Remove the control drawer from the container.
2. Remove the damaged drawer-head from the drawer assembly.
3. Install new drawer-head on drawer assembly.
4. Install a GSA approved combination lock meeting FF-L-2740 on new drawer-head (use original lock if appropriate).
5. Reinstall control drawer in container.

5.13 Safety Precautions. All safety precautions should be taken to prevent injury during this procedure. Possible hazards include, but are not limited to:

1. Hot or sharp surfaces and edges
2. Hot drill bits and hole saws
3. Hot metal chips
4. Hole saw binding in hole

Recommend that the following safety and protective gear be used:

1. Eye protection, such as safety goggles
2. Leather gloves
3. Drop cloth

5.14 Security Precautions. The classified material custodian (or alternate) for the container being neutralized should be present during this procedure.

5.15 Procedures for Neutralizing Red Label Class 5 and 6 Security Containers - Method 3. Procedures to neutralize lock-outs on GSA security containers purchased under Federal Specification AA-F-358G that are equipped with combination locks purchased under Fed Spec FF-L-2740 follow. GSA approved Class 5 and Class 6 security file containers purchased after October 1990 meet the requirements of Fed Spec AA-F-358G. Due to the increased covert entry resistance of these containers, traditional lock-out neutralization techniques may not be cost-effective.

.

Downloaded from http://www.everyspec.com

5.15.1 Containers purchased under Fed Spec AA-F-358G are differentiated from earlier models by inspecting the GSA label attached to the face of the container. GSA labels on containers purchased before October 1990 are silver with BLACK lettering. Labels on containers purchased after that date are silver with RED lettering (see Figure 1).

5.15.2 All containers discussed here have one or more drawers with a mounted combination lock. The drawer with the combination lock is referred to as the control drawer. Control drawers are locked in place by hardened steel bolts that extend from each side of the drawer to engage the body of the container. The drawer-head of the control drawer is removable from the drawer itself.

5.15.3 Before attempting neutralization entry procedures on containers purchased under Fed Spec AA-F-358G, contact the manufacturer concerning warranty provisions. Provide the serial number and date of manufacture.

5.15.4 This method creates dust and debris and so may not be appropriate for some situations.

5.15.5 The tools used in this procedure are readily available and the procedure does not require previous locksmith or safe-opening experience. The technician will make four vertical cuts through the face of the drawer-head. Each pair of cuts will remove a section of a locking bolt. This will allow the drawer handle to be rotated to retract the bolt ends. This allows the locking drawer to be opened without damaging the lock or the rest of the container. Repair involves replacing the control drawer-head.

5.16 Tools and Equipment. Tools and equipment needed to perform this procedure include:

Hamilton & Mosler Class 6 Containers, Letter Size:

1. Heavy duty 7-1/4-inch builders circular saw.
2. 4 each* 6-inch x 1/8-inch abrasive metal cutoff blades.

Hamilton Class 5 Container, Legal Size:

1. Heavy duty 7-1/4-inch builders circular saw.
2. 8 each* 7-inch x 1/8-inch abrasive metal cutoff blades.

Mosler Class 5 Container, Legal Size:

1. Heavy duty 10-1/4-inch builder's circular saw (requires minor modification, as shown in Figure 4).
2. 4 each* 10-inch abrasive metal cutoff blades.

* Note: Number of blades listed for the various containers is approximate and will vary with specific tools used and operator experience.

.

Downloaded from http://www.everyspec.com

5.17 Layout and Marking Procedures.

1. Using the appropriate dimensions in Figure 5, measure up from the bottom of the drawer head and mark. Make at least three equally-spaced marks across the drawer.
2. Using a straight edge, draw a horizontal line using the marks made in Step 1 as a guide. This is the centerline of the locking bolt.
3. Using the appropriate dimensions in Figure 5, measure from the right side of the drawer and mark. Repeat this same measurement on the left side of the drawer.
4. Using a builder's square or a straight edge, draw the vertical lines at the marks on both the right and left sides of the drawer face. These are the saw cut locations.

5.18 Cutting Procedure.

1. Determine the type, class, and manufacturer of the file container. Contact the Lock Program POC if identification assistance is needed.
2. Remove the label holder from the face of the container before beginning layout.
3. Layout and mark cutting locations on the face of the control drawer (see Figure 5).
4. Set the cutting depth of the circular saw to maximum.
5. Using the circular saw, cut through the drawer face and through the locking bolt at each marked location.
6. When the cutting is complete, rotate the handle and open the drawer.

Notes:

a. Make the inboard cuts first to prevent the locking bolt from rolling during cutting.
b. Depth setting may need to be reset during cutting procedure.
c. Maintain the cut centered at the horizontal line.
d. Cutting too high will damage the container frame.
e. Cutting too low will sever the bolt carrier rods on a Hamilton container.
f. Always maintain a firm grip on the saw.

If the bolt linkage is severed during the cutting procedure, enlarge the outer cut on each side of the drawer (if necessary) and retract the bolts with a screwdriver or similar tool.

5.19 Repair Procedure.

1. Remove the control drawer from the container.
2. Remove the damaged drawer-head from the drawer assembly.
3. Install new drawer-head on drawer assembly.
4. Install a GSA approved combination lock meeting FF-L-2740 on new drawer-head (use original lock if appropriate).
5. Reinstall control drawer in container.

.

Downloaded from http://www.everyspec.com

5.20 Safety Precautions. All safety precautions should be taken to prevent injury during this procedure. Use extreme caution when using the modified 10-1/4-inch circular saw. Possible hazards include, but are not limited to:

1. Hot or sharp surfaces and edges
2. Hot saw blades
3. Hot flying sparks

The following safety and protective gear is recommended:

1. Eye protection, such as a full face shield
2. Hearing protection
3. Leather gloves
4. Fire extinguisher

It is also recommended that a second person be present, to see that sparks do not cause a fire.

5.21 Security Precautions. The classified material custodian (or alternate) for the container being neutralized should be present during this procedure.

.

Downloaded from http://www.everyspec.com

6. NOTES

6.1 Background Information. This document details unclassified procedures to neutralize and repair lock-outs on GSA approved security containers and vault doors in a manner that will allow retention of the GSA approval.

6.1.1 GSA tests containers, combination locks, and vault doors to ensure that these products provide the levels of security protection defined in Federal specifications. Products that successfully pass the specification requirements are approved for listing on Qualified Products Lists and are authorized to bear a GSA approval label. Current Federal specifications for security containers include AA-F-358 for security filing cabinets, AA-F-363 for map and plans and general purpose cabinets, AA-C-2859 for weapons containers, AA-V-2737 for modular vault panels, and AA-D-600 for security vault doors. The Federal specification for combination locks which secure classified material is FF-L-2740. Federal specifications which have been canceled but which were used for other products include AA-F-357 for insulated security filing cabinets, AA-F-2815 for Class 7 security filing cabinets, AA-S-1518 for tool-resistant security containers, and AA-D-2757 for Class 8 security vault doors.

6.1.2. When containers or vault doors cannot be opened through normal procedures they are described as being “locked-out.” When locked-out containers or doors are opened in a manner that causes damage to the product or reduces the security of the product, the GSA approval label must be removed. Proper opening and repair of containers and doors will allow the GSA label to be retained.

6.1.3 In 1990, GSA revised the container and door specifications to increase the level of protection they provide. The label color was changed to differentiate new equipment from earlier models. On products manufactured prior to October 1990, the GSA label is black and silver. New labels are red and silver, although some new specialized containers have labels with other colors. In 1992, changes were made in the requirements for the combination locks installed on containers at the time of manufacture.

6.1.4 The changes in container and door construction provided covert entry resistance of the containers and doors, and reduced the cost-effectiveness of traditional lock-out neutralization techniques. Also, traditional techniques were not appropriate, considering the increased cost of combination locks and the need to evaluate lock failures. New techniques were developed to provide cost-effective means of entry and to prevent damage to the combination locks.

6.2 Additional Information or Points of Contact. For additional information contact:

NFESC:
DoD Lock Program Hotline
Phone: DSN 551-1212 or Commercial (805) 982-1212

Department of the Navy:
Code CNO (N09N3)

.

Downloaded from http://www.everyspec.com

DON Information Security
Phone: DSN 288-9143 or Commercial (202) 433-9143

Quality Assurance Information:
General Services Administration
Federal Supply Service
Phone: (703) 305-6338

7. For information on drawer-head replacement or warranty provisions, contact:

Hamilton Products Group Inc.
P. O. Box 6248
Arlington, VA 22206-0248
Phone: (800) 876-6066

Mosler Government Sales
8133 Leesburg Pike, Suite 630
Vienna, VA 22182
Phone: (800) 568-7233

.

Downloaded from http://www.everyspec.com

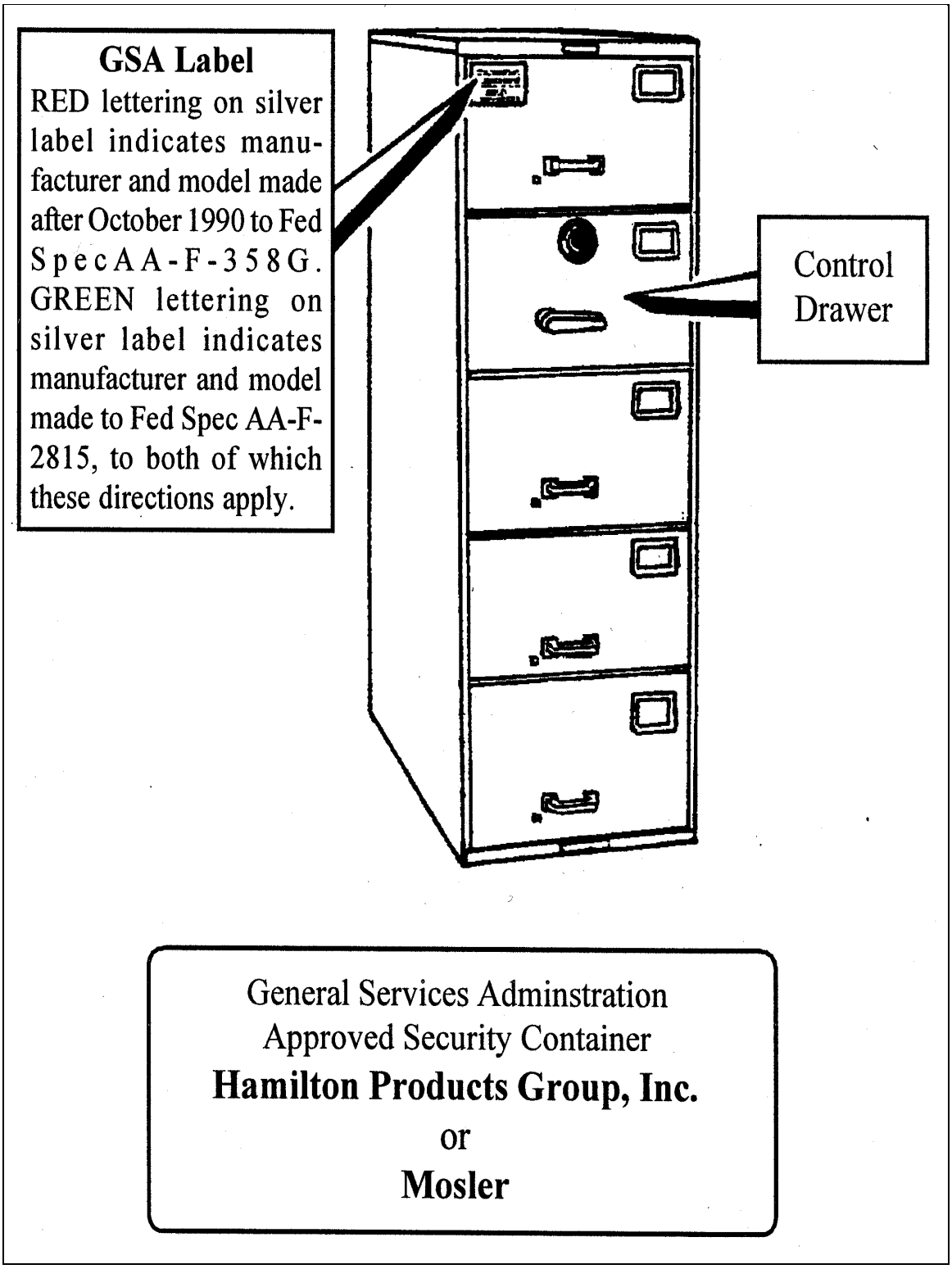

Figure 1. Security container and label.

Downloaded from http://www.everyspec.com

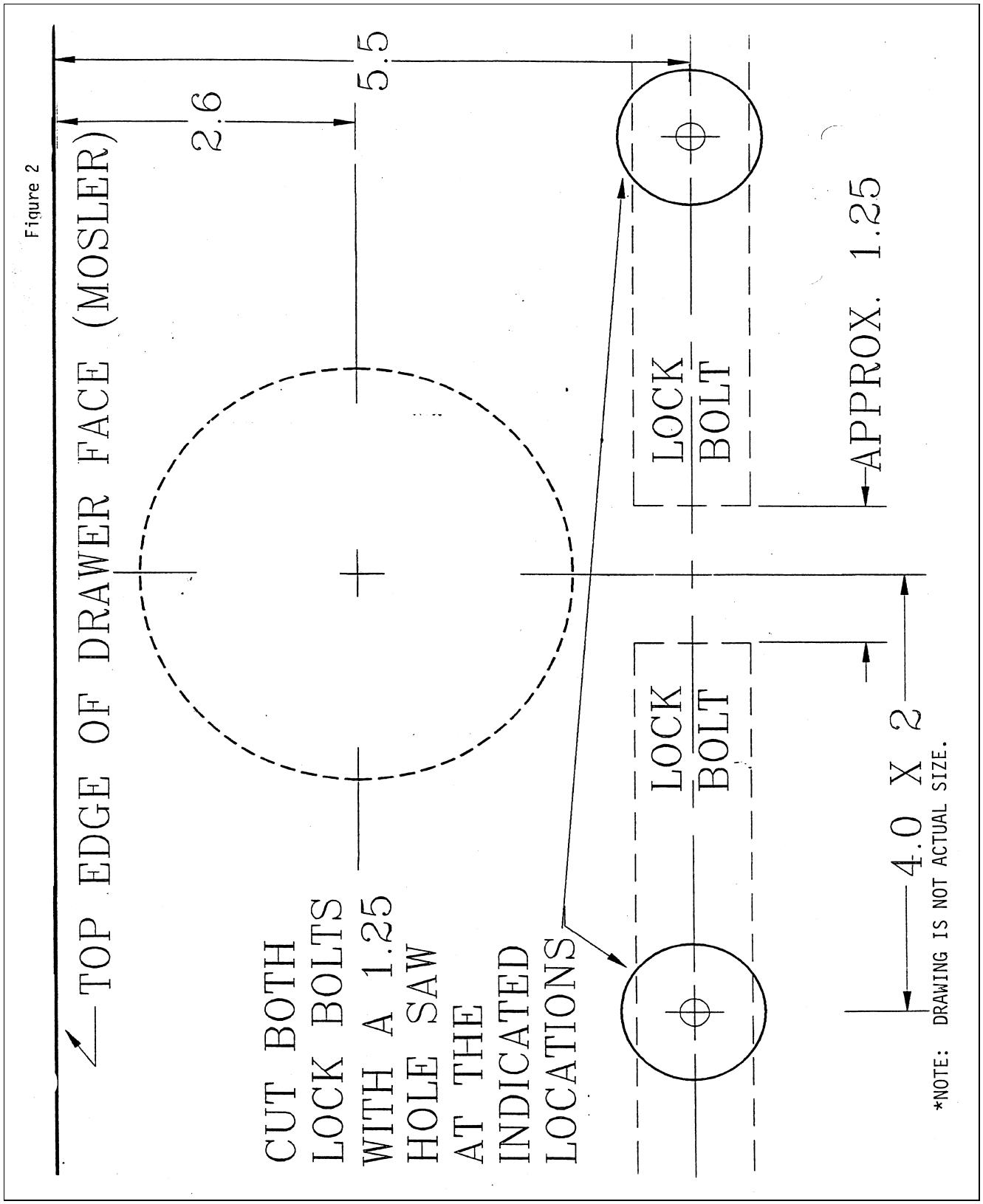

Figure 2. Container measurements.

Downloaded from http://www.everyspec.com

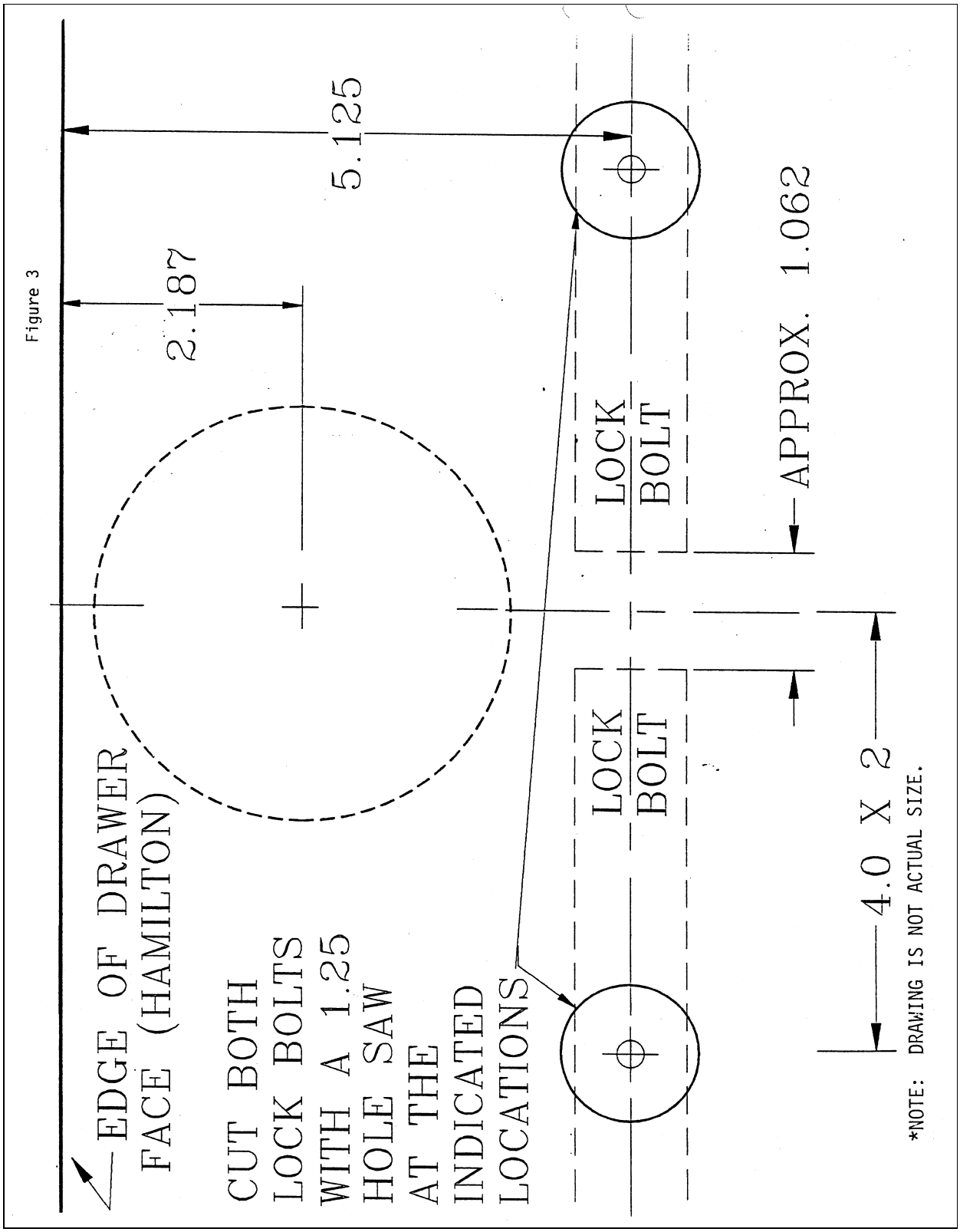

Figure 3. Container measurements.

Downloaded from http://www.everyspec.com

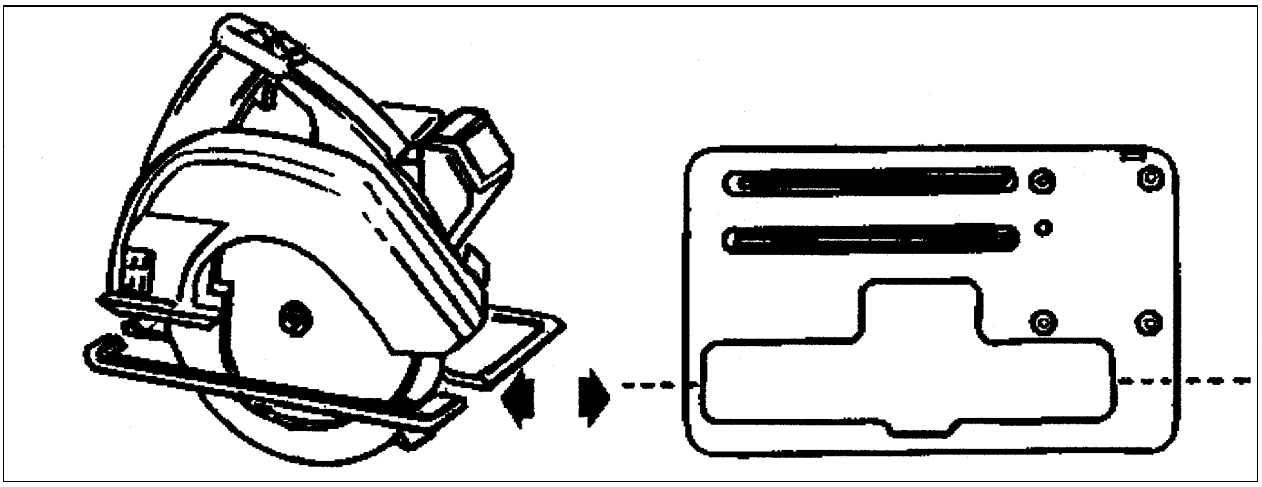

Figure 4. Builder's circular saw. Cut the foot assembly of the 10-1/4-inch circular saw as shown. File or grind the cut edges of the foot assembly to remove sharp edges.

.

Downloaded from http://www.everyspec.com

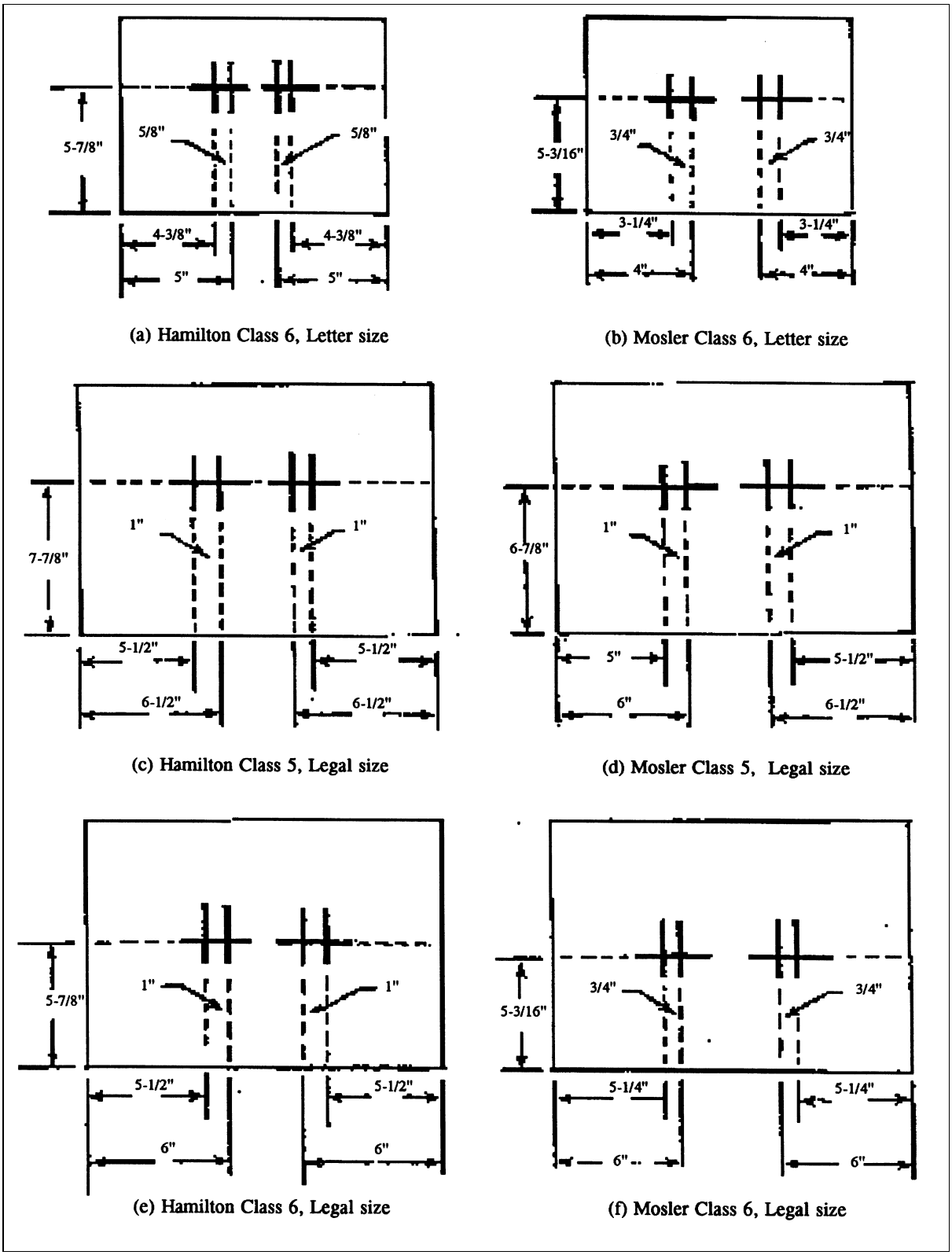

Figure 5. Classes and sizes of security containers, showing cut marks locations.