FED-STD-297E
August 1, 1990
SUPERSEDING
FED-STD-297D
October 1, 1985

FEDERAL STANDARD

RUSTPROOFING OF COMMERCIAL (NONTACTICAL) VEHICLES

AMSC N/A

FSC-23GP

GENERAL SERVICES ADMINISTRATION
Washington, D. C. 20301

Rustproofing of Commercial (Nontactical) Vehicles.

1. This Federal Standard is approved by the Commissioner, Federal Supply Service, General Services Administration, for the use of all Federal Agencies.

2. Beneficial comments (recommendations, additions, deletions) and any pertinent data which may be of use in improving this document should be addressed to: US Army Tank-Automotive Command, ATTN: AMSTA-UED, Warren, MI 48397-5000, by using the self-addressed Standardization Document Improvement Proposal (DD Form 1426) appearing at the end of this document or by letter.

FOREWORD

This standard establishes requirements for rustproofing of commercial, nontactical, self-propelled and towed vehicles procured for Government use.

CONTENTS

FIGURES

1. SCOPE

1. Scope. This standard establishes requirements for rustproofing of commercial, nontactical, self-propelled and towed vehicles procured for Government use.

2. REFERENCED DOCUMENTS

* 2.1 Issues of documents. The following documents of the issue in effect on date of invitation for bids on request for proposal, form a part of this standard to the extent specified herein.

* 2.1.1 Government documents. The following specifications form a part of this standard to the extent specified herein.

SPECIFICATIONS
MILITARY

MIL-C-17504	- Coating, Compound, Acrylic, Clear.
MIL-M-43719	- Marking Materials and Markers, Adhesive, Elastomeric, Pigmented: General Specification For.
MIL-C-62218	- Corrosion Preventive Compound, Cold Application (For Fielded Motor Vehicles).

(Unless otherwise indicated, copies of military specifications are available from the Naval Publications and Forms Center, Military Specifications and Standards, Bldg. 4D, 700 Robbins Avenue, Philadelphia, PA 19111-5094.)

* 2.1.2 Other Government documents. The following other Government documents form a part of this standard to the extent specified herein.

DEPARTMENT OF LABOR
Occupational Safety and Health Administration (OSHA)
Safety and Health Regulations

(Applications for copies of OSHA publications should reference the Code of Federal Regulations, Title 29, and should be addressed to the Superintendent of Documents, U.S. Government Printing Office, Washington, D. C. 20402.)

3. DEFINITIONS

The terms used in this standard are commonly understood by the technical community to which they apply and are not used here in such a way to introduce new or limited meanings.

4. GENERAL REQUIREMENTS

* 4.1 Rustproofing. When rustproofing is required by specifications or other procurement documents, the vehicle, including galvanized and aluminum surfaces, shall be provided with rustproofing as specified herein. Stainless steel edges abutting parts requiring rustproofing shall also be rustproofed. Pretreated aluminum such as anodized, alodined and phosphate dipped; fiberglass, plastic, rubber or stainless steel surfaces need not be rustproofed.

4.2 Identification. A decal identifying the rustproofing processor shall be mounted in a visible location inside the vehicle, on the edge of the door on the driver's side, or under the hood. The decal shall conform to MIL-M-43719 type I, class 1, shall be coated with clear acrylic compound conforming to MIL-C-17504, and shall include at least the following information:

(a) Contractor/company rustproofing the vehicle.
(b) Rustproofing material used and its manufacturer.
(c) Date vehicle was rustproofed.

* 4.3 Materials. The rustproofing compound used shall be a qualified product conforming to MIL-C-62218. The qualified product shall not be diluted with solvents or other thinners prior to use. The compound may be heated with a drum heater when applied in cold weather or in unheated areas. The compound shall not cause deterioration to any material used in automotive construction. Application of the rustproofing compound shall prevent corrosion (rusting) of vehicles under all severe environmental conditions. These conditions include but are not limited to the following:

(a) Acid rain
(b) Heavy rainfall
(c) High humidity
(d) Snow
(e) Salt spray
(f) Industrial pollutant
(g) Atmosphere pollutant.

4.4 Instructions. Illustrated rustproofing instructions covering the vehicle to be rustproofed shall be prepared and maintained by the contractor in technical manual form. (One rustproofing manual covering several similar vehicle types is acceptable.) The manuals shall specify required tools, materials, procedures and applications for proper rustproofing of the specific vehicle. Procedures in the manual shall include detailed drawings that specifically show where holes are to be drilled, and how access is to be obtained to provide complete coverage for all specified areas of the vehicle. The material shall be applied by trained rustproofing technicians

and in accordance with all applicable OSHA Standards and Regulations. A copy of the manual shall be furnished to the authorized Government Procuring Agency's Quality Assurance representative prior to rustproofing any vehicle under the contract.

4.5 Contractor inspection system. The contractor shall provide and maintain a written inspection system covering materials, tools, technical training and inspection procedures used under the contract. The inspection system shall describe inspections and levels of inspection, including the acceptance/rejection criteria for vehicle treatment, prohibited application, and coating application of rustproofing compound. The inspection procedures shall provide for the verification of process controls necessary to insure cleanliness of surface to be treated, the maintenance of proper temperature and viscosity of the rustproofing compound at the time of application and other process controls which cannot be verified subsequent to application of the compound. Inspection reports shall be submitted to the authorized Government quality assurance representatives.

* 4.6 Workmanship. Workmanship shall be of such quality as to assure that application of corrosion preventive compound to all vehicles under contract shall conform to the rustproofing instructions prepared by the contractor and to the requirements of this standard. Particular attention shall be paid to the requirement of an evenly applied coating with no excessive running, sagging, or build-up. Any overspray of material on body finish, trim, windows, or upholstery shall be removed without causing damage to any component or material (paint, rubber, plastic, etc.). Any overspray that may accumulate in prohibited areas (see 5.5) shall be removed with a clean cloth and solvent, such as naphtha. A minimum amount of solvent should be used to remove deposits of compound from the upholstery. Necessary precaution shall be taken to assure that the solvent used does not cause damage to rubber padding, upholstery, adhesives, and any other prohibited areas (see 5.5). In addition, for tropical rustproofing, see 5.11.1.

5. DETAILED REQUIREMENTS

5.1 Application equipment.

* 5.1.1 Spray gun. An airless atomization type gun designed for fluid pressure atomization shall be used. The spray gun shall be capable of spraying the rustproofing component on vertical or horizontal surfaces without abnormal fatigue to the operator. Material passages shall be adequate for material demand required for spraying with a minimum drop in pressure. The gun shall consist of a body, wand, and necessary parts for the assembly of nozzle, material valve, filter connection and trigger. A gun which provides a fog or air-atomization spray may be used only in enclosed areas such as box section construction, rocker panels, quarter panels, and doors.

5.1.2 Wands. A series of wands are required for rustproofing of the vehicle shall be provided. Each wand shall be designed for rustproofing of specific areas of the vehicle and shall be capable of operating through 1/2 inch access holes. The series shall include rigid, flexible and angular types (90 degrees and 45 degrees). Wands with multi-directional spray capability shall have indicators showing the direction of the spray.

5.1.3 Spray nozzles. The spray nozzles shall be equipped with tungsten carbide, stainless steel or brass tips, .015-.026 inch size, capable of providing flat-fan and cone spray patterns.

* 5.2 Application procedure. Vehicles shall be clean, dry and free from loose materials prior to application of rustproofing compounds. Vehicles that have accumulated deposits of rust, mud, dirt, oil and grease shall be cleaned by any suitable means, such as power water washing, steam cleaning or mechanical means such as wire brushing and improvised tools. Allow vehicles to air dry a minimum of 24 hours, after any power water washing, before applying rustproofing compound. Blowing of air, in lieu of drying by air for 24 hours, is also acceptable. During application of rustproofing compound, particular attention shall be given to those areas of the vehicle that are most susceptible to corrosion such as seams, welds, crevices, and hidden recessed areas. During cleaning and application procedures, the operator shall process the vehicle in a well ventilated area, with adequate lighting, and shall wear protective clothing such as goggles, face shields, rubber gloves, aprons and boots.

5.2.1 Film thickness. The rustproofing compound shall be applied to a film thickness of not less than 4 mils when the film is dry to the touch.

5.3 Access and drain holes. One-half inch access holes shall be drilled for insertion of spray wands to apply rustproofing compound and for inspection purposes. The location of the holes shall be as specified in the instruction manual (see 4.4). Boxed-in areas shall have access holes drilled on no greater than 18 inch centers. After application, the holes shall be sealed with weather resistant plastic or rubber caps. Drain holes used for application of compound shall not be sealed.

* 5.4 Application areas. Vehicles shall be rustproofed in accordance with the instruction manual prepared by the contractor (see 4.4) and in accordance with this standard. Table I and figures 1, 2 and 3 shall be used in the preparation of such instruction manuals which shall show the specific application areas of the vehicle to be rustproofed.

TABLE I. Rustproofing areas - automobiles and trucks.

Area	Automobile	Truck
Front assembly	Inside surface of radiator shield, inside surface of grille panel assembly supports, gravel shield panel, header panel (if sheet steel), front fender light and headlight-associated hardware (see figures 1(C) and 1(D)).	Inside surface of radiator shield, inside surface of grille panel assembly supports, gravel shield panel, front fender light and headlight-associated hardware (see figure 3(J)).
Fenders	Complete fender wells; eyebrows; undersides of fenders; all enclosed, boxed-in, and support sections (see figure 1(A) and 1(E)).	Complete fender wells; eyebrows; undersides of fenders; all enclosed, boxed-in, and support sections (see figure 3(H) and 3(K)).
Hood and deck lid	Front edge or section of hood, all underside areas of the hood, except insulated surfaces. Rear area of deck lid where moisture may settle or may be retained. Complete inside of all boxed-in or support sections (see figures 1(B) and 2(B)).	Front edge or section of hood, all underside areas of the hood, except insulated surfaces. Rear area of deck lid where moisture may settle or may be retained. Complete inside of all boxed-in or support sections. Outside flat surface of the cowl fire wall except insulated areas (see figure 3(D)).
Cowl	Complete inside of all enclosed or boxed-in support sections and double paneled sections (see figure 2(A)).	Complete inside of all enclosed or boxed-in support sections and double paneled sections (see figure 3(L)).
Roof	N/A	Trucks with cab: All inside roof seams, roof supports, drip rail seams, and roof shelves including all boxed-in areas of the roof overhang (see figure 3(B)).

TABLE I. Rustproofing areas - automobiles and trucks. - (Continued)

Area	Automobile	Truck
Doors	Front and rear - inside of outer panel including front, rear and bottom panel, hem flange (bottom seam) and adjacent areas (see figure 2(H)).	Front, rear, and side - inside of outer panel including front, rear and bottom panel and upper frame, hem flange (bottom seam) and adjacent areas (see figure 3(A)).
Pillars	Inside front, center and rear pillars at bases (see figure (2(K)).	Complete inside front, center and rear pillars to roof line (see figure 3(E)).
Dog legs	All internal areas and boxed-in sections (see figure (2(J)).	All internal areas and boxed-in sections (see figure 3(F)).
Rocker panels	All inner areas and boxed-in sections (see figure 2(G)).	All inner areas and boxed-in sections (see figure 3(G)).
Quarter panel	Inside quarter panel, rear fender well, boxed-in and double panel sections (see figures 2(E) and 2(L)).	Inside quarter panel, rear fender well, boxed-in and double panel sections (see figures 2(E) and 2(L)).
Rear lights	Quarter panel light wells and rear lights wells (see figure 2(F)).	Quarter panel light wells and rear light wells (see figure 3(S)).
Rear trunk and panel	Rear trunk and panel assembly and all boxed-in or double paneled areas and seams including the hinging area of the deck lid and rear gravel shield (see figures 2(C)).	Rear storage compartment and panel assembly and all boxed-in or double paneled areas and seams including the hinging area of the deck lid and rear gravel shield (see figure 3(R)).
Tailgate/back doors	Station wagon tailgate: complete inside surfaces of the outer panel, lower panel and all seams (see figure 2(C)).	Van and pickup trucks: all rear double paneled and boxed-in sections as well as any tailgates and doors to be treated the same as front doors to roof line (see figures 3(T) and 3(U)).

TABLE I. Rustproofing areas - automobiles and trucks. - (Continued)

Area	Automobile	Truck
Underside	The complete underside including metal fuel truck (do not drop fuel tank), floor, wheel housing, fender lips, brake fluid lines gas lines, support clips, rear axles that carry brake lines (except differential central section) and exposed areas. Unitized construction including complete frame and inside and outside surfaces.	The complete underside including metal fuel tank(s) (do not drop fuel tank(s)), floor, wheel housing, fender lips, brake fluid lines, gas lines, support clips, front and rear bumper brackets and exposed areas. Light truck frames of integral design (boxes, rails) and all appropriate metal.
Body floor supports	All underside body floor supports; enclosed and boxed-in sections as well as exposed areas.	All underside body floor supports; and crossmembers: enclosed and boxed-in sections as well as exposed areas (see figures 3(N) and 3(P)).
Seams and moldings	All open seams and metal-to-metal (non-adhesive backed) moldings are to be sealed.	All open seams and metal-to-metal (non-adhesive backed) moldings are to be sealed.
Cab interior	N/A	Above windshield, above rear window and behind seat(s) (see figures 3(V), 3(W) and 3(X)).
Body interior	N/A	Van and suburban trucks with double wall structure, inside of roof edges.
Underside of tilt cab	N/A	Complete underside (see figure 3(Y)).
Tilt cab door area	N/A	See figures 3(Z) and 3(AA)).

TABLE I. Rustproofing areas - automobiles and trucks. - (Continued)

Area	Automobile	Truck
Other body requirements	N/A	Inside all enclosed, boxed-in and double paneled areas including doors or gates to roof line and roof through overhang inner seams; insulated bodies in uninsulated areas up to the rub rail. Also see 5.6.

5.5 Prohibited application areas. The application of rustproofing compound shall be prohibited on components, assemblies, and subassemblies whose function, duration of life or appearance could be reduced by the compound. The prohibited areas shall include, but shall be not limited to, areas specified in table II. Prohibited areas shall be listed in the instruction manual (see 4.4).

TABLE II. Prohibited rustproofing areas - automobiles and trucks.

Area	Automobile	Truck
Area no. 1 Front assembly	a. Grille exterior surface b. Light well exterior surface c. Radiator exterior surface and radiator top, bottom and end tanks	a. Grille exterior surface b. Light well exterior surface c. Radiator exterior surface and radiator top, bottom and end tanks
Area no. 2 Hood assembly and deck lid	a. Hood exterior surface b. Data plates, stickers or labels c. Hood lock working parts	a. Hood exterior surface b. Data plates, stickers or labels c. Hood lock working parts d. Electrical connections
Area no. 3 Engine compartment	a. Electrical connections b. Drive belts (general) c. Radiator core d. Throttle linkage e. Battery and battery cables f. Air cleaner assembly g. Horn assembly h. Air inlet tubes	a. Electrical connections b. Drive belts (general) c. Radiator core d. Throttle linkage e. Battery and battery cables f. Air cleaner assembly g. Horn assembly h. Air inlet tubes

TABLE II. Prohibited rustproofing areas - automobiles and trucks.

Area	Automobile	Truck
	i. Insulated surfaces on fire wall and under hood j. Alternator/generator k. Emission A.I.R. pump l. Air conditioning compressor m. Air conditioning condenser n. Engine fan/fan clutch assembly o. Carburetor p. Intake/exhaust manifold q. Air conditioning cooler r. Power steering cooler.	i. Transmission cooler Insulated surfaces on fire wall and under hood and electrical components k. Alternator/generator l. Emission A.I.R. pump m. Air conditioning compressor n. Air conditioning condenser o. Engine fan/fan clutch assembly p. Carburetor q. Intake/exhaust manifold r. Air conditioning cooler. s. Power steering cooler
Area no. 4 Door assemblies	a. Door exterior surface b. Auto interior door surface c. Door seals d. Windows and trim e. Side mirrors	a. Door exterior surface b. Truck interior door surface c. Door seals d. Windows and trim e. Side mirrors.
Area no. 5 Rear of vehicle	a. Trunk lid exterior surface b. Trunk area surface c. Trunk electrical wiring connections d. Station wagon tailgate exterior surface e. Tailgate upholstery, trim and windows f. Bumper exterior surface g. Trunk lock working parts.	a. Panel and van door(s) (single and double) exterior surface b. Tailgate exterior surface (pickup and other models) c. Electrical wiring connections d. Rear storage compartment exterior surface e. Air brake hose couplings f. Trailer hitch g. Fifth wheel (tractor) h. Deck plates (tractor)

TABLE II. Prohibited rustproofing areas - automobiles and trucks. - (Continued)

Area	Automobile	Truck
Area no. 6 Exterior of vehicle	All visible exterior finish painted surfaces, windows, lights and trim where rustproofing is not specifically required by table I.	All visible exterior finish painted surfaces, windows, lights and trim where rustproofing is not specifically required by table I.
Area no. 7 Underside of vehicle	a. Engine exhaust system including catalytic converter(s) b. Heat shields c. Oil pan d. Drive shaft and universal joints e. Brake drums f. Starter g. Component breathers h. Blockage of drain holes or passages i. Wheel and tire surfaces j. Transmission housing	a. Engine exhaust system b. Heat shields c. Oil pan d. Propeller shafts and universal joints e. Air chambers f. Bearing boxes g. Power takeoff units h. Parking brake mechanism i. Brake drums j. Starter k. Component breathers l. Liquid tanker dispensing equipment m. Blockage of drain holes or passages n. Transmission housing o. Moisture ejector p. Air dryer q. Slack adjusters r. Transfer case housing.
Area no 8 Interior of vehicle	a. Visible interior finish painted surfaces not specifically required to be rustproofed by table I (or 5.8 when tropical rustproofing is specified) b. Upholstery c. Glass and trim d. Window seals e. Seat belts f. Seat belt anchors	a. Visible interior finish painted surfaces not specifically required to be rustproofed by table I (or 5.8 when tropical rustproofing is specified) b. Upholstery c. Sunvisors d. Windshield trim, glass and seals e. Side and rear window trim, glass and seals

TABLE II. Prohibited rustproofing areas - automobiles and trucks. - (Continued)

Area	Automobile	Truck
	g. Seat belt retractors h. Seat adjusting mechanism i. Floor mats j. Floor surface, when floor mat is not provided as a standard and is not available as an optional item k. Inside roof surface when headliner is not provided as a standard and is not an optional item l. Styrofoam headliner bonded to roof surface m. Cardboard headliner n. Steering wheel and controls o. Pedals: Gas, brake, clutch	f. Driver's and passenger's seats g. Seat belts h. Seat belt anchors i. Seat belt retractors j. Seat adjusting mechanism (working parts) k. Floor mats l. Floor surface, when floor mat is not provided as a standard and is not available as an optional item m. Inside roof surface when headliner is not provided as a standard and is not an optional item n. Dome light assembly o. Styrofoam headliner bonded to roof surface p. Cardboard headliner q. Steering wheel and controls r. Pedals: Gas, brake controls.

5.6 Truck bodies on chassis. The complete underside of truck bodies mounted on chassis shall be rustproofed, including complete fender wells and underside of fenders. Rustproofing shall be applied to all enclosed, boxed-in and support sections; double paneled sections; all inside roof seams; roof supports; drip rail seams and roof shelves; all boxed-in areas of the overhang; inside of light wells; and to supporting clips. Insulated areas of bodies need not be rustproofed. The interior surfaces of 10 gage (0.1345 inch) and thicker structural steel members sealed by continuous welds need not be rustproofed.

* 5.7 Trailers, semitrailers and dollies. The complete underside of trailers, semitrailers and dollies shall be rustproofed, including all sides of the crossmembers and on the inside surfaces (bottom, inner sides, but not top) of the main frame members and side rails. All frame enclosed surfaces (fifth wheel plate, lights), box sections, brake lines, lighting conduit, clips all other frame underside exposed areas, and body areas as mentioned in table I opposite "Other body requirements" shall also be rustproofed.

* 5.8 Buses. The chassis and complete underbody shall be rustproofed, including fenders, skirts and wheelwells.

* 5.9 Ambulances. The chassis and complete underbody shall be rustproofed, including fenders, skirts and wheelwells.

* 5.10 Scooters: gas and electric. Scooters shall be rustproofed in accordance with the truck requirements herein.

* 5.11 Tropical rustproofing. The additional vehicle areas to be covered, when tropical rustproofing is specified, shall be shown in the illustrated rustproofing manual prepared by the contractor (see 4.4). All areas of the vehicle, including such additional areas, shall be coated with two coats of the rustproofing compound applied with a four hour drying time between coats. Examples of the additional areas to be covered, when tropical rustproofing is specified, are as follows:

(a) Roof: When a headliner is spaced from the roof surface with roof bows, the inside areas of the roof and roof panel shall be rustproofed (see table II).
(b) Pillars, up to the roof.
(c) Floor: Under floor mat, complete interior of floor. When floor mat is not provided as a standard and is not available as an optional item, the floor surface shall not be rustproofed (see table II).
(d) Area above fuel tank(s). When area above fuel tank(s) is not accessible for application of rustproofing compound, the fuel tank(s) shall be dropped or lowered to permit access to the surfaces above the tank.
(e) Engine oil pan, transmission pan, battery terminals, bottom tank of radiator and similar parts requiring protection in tropical areas.
* (f) Pretreated aluminum and stainless steel surfaces otherwise exempted by 4.1.
* (g) Chassis, complete exposed frame, inside and out.

* 5.11.1 Loss of appearance, tropical rustproofing. Care in preserving the final appearance of the vehicle after tropical rustproofing shall be evident, but it is recognized by the Government that some unsightly evidence of rustproofing may be unavoidable with tropical rustproofing.

NOTICE: Asterisks are used in this revision to identify changes with respect to the previous issue. Bidders and contractors are cautioned to evaluate the requirements of this document based on the entire content regardless of the marginal notations and relationship to the last previous issue.

MILITARY INTEREST:
Army - AT
Navy - YD, MC
Air Force - 84, 99

Preparing activity:
Army - AT

CIVIL AGENCY COORDINATING ACTIVITIES:
D. C. GOVT - DCG
DOT - FHW, MVP
GSA - FSS
INTERIOR - BPA
USDA - AFS, ARS, SCS

Project Number 23GP-0555

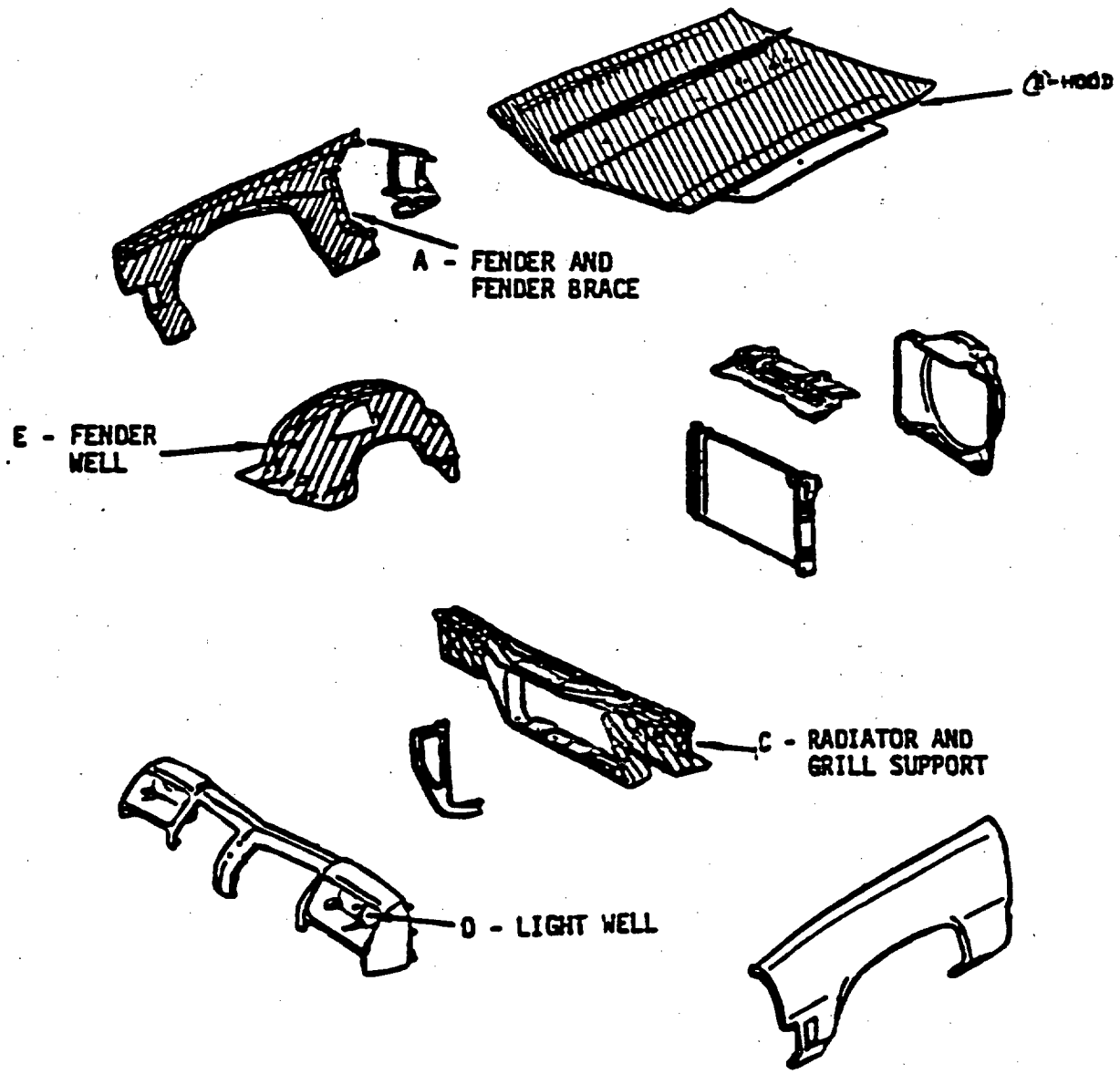

FIGURE 1. Rustproofing - front end assembly.

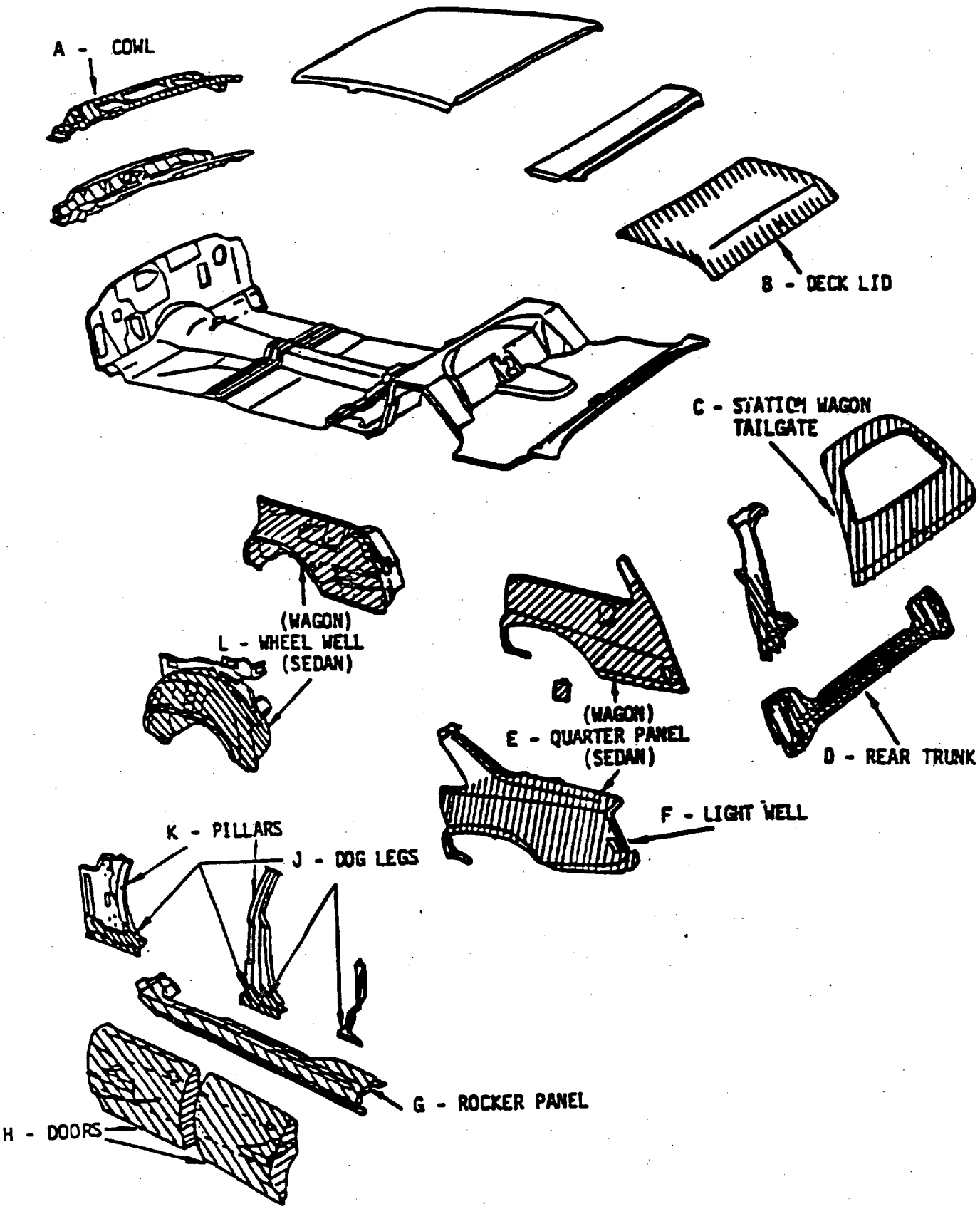

FIGURE 2. Rustproofing - automobiles.

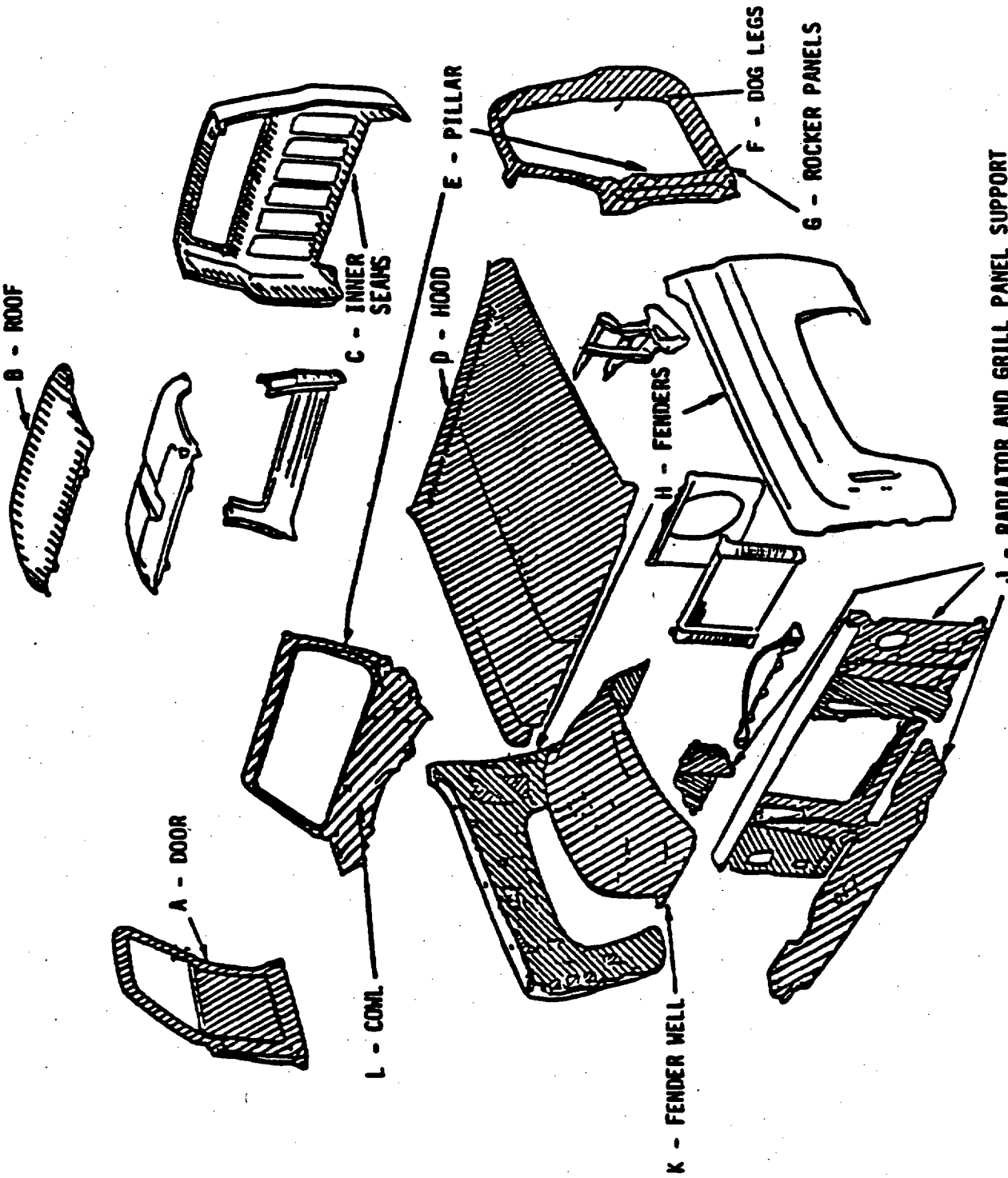

FIGURE 3. Rustproofing - truck assembly.

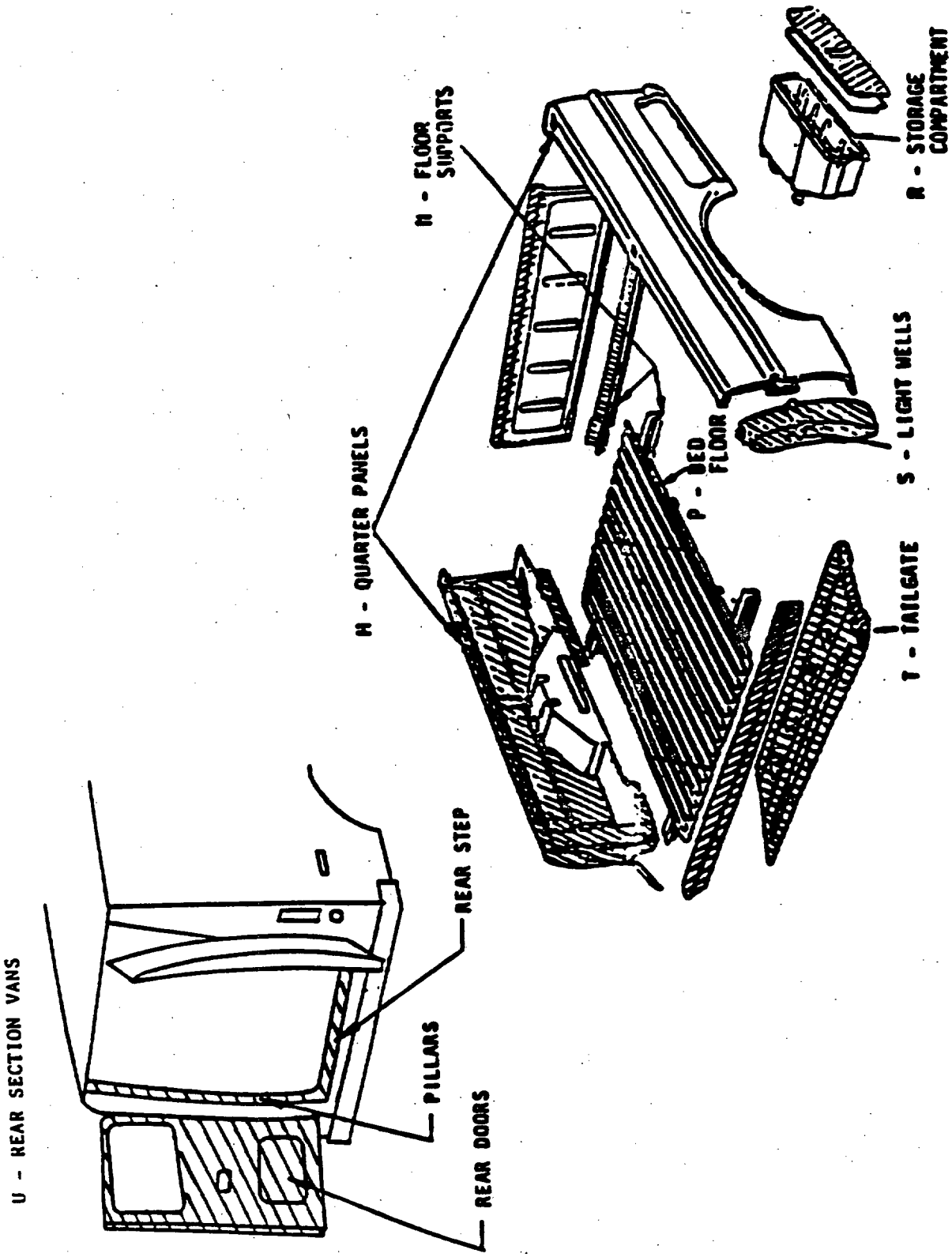

FIGURE 3. Rustproofing - truck assembly - continued.

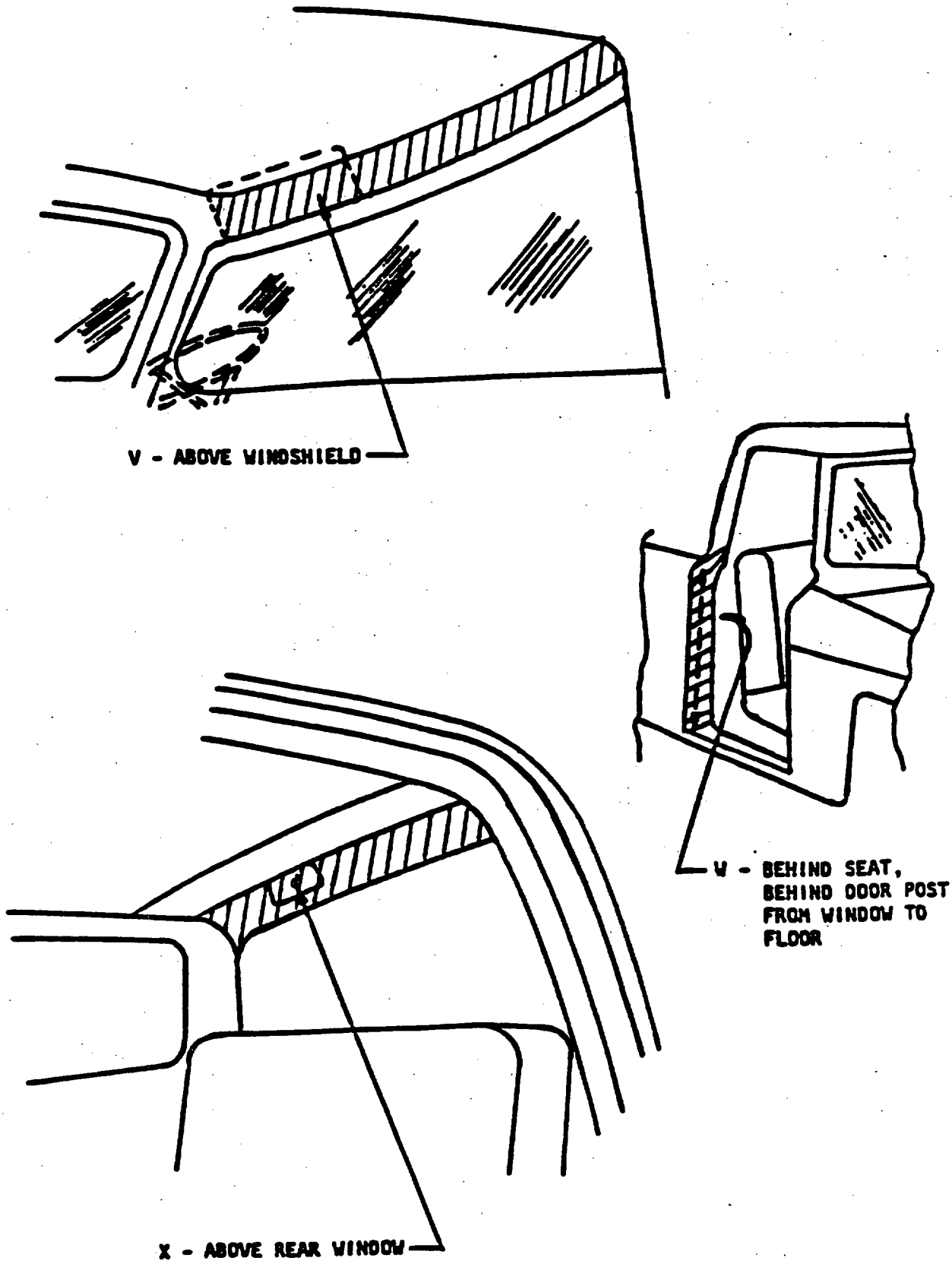

FIGURE 3. Rustproofing inside cab section - truck assembly - continued.

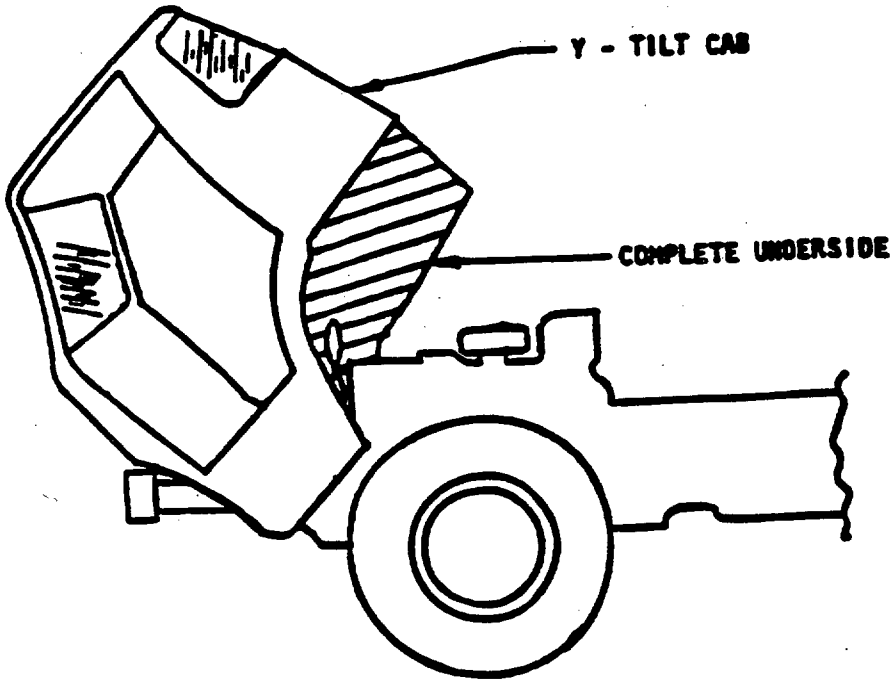

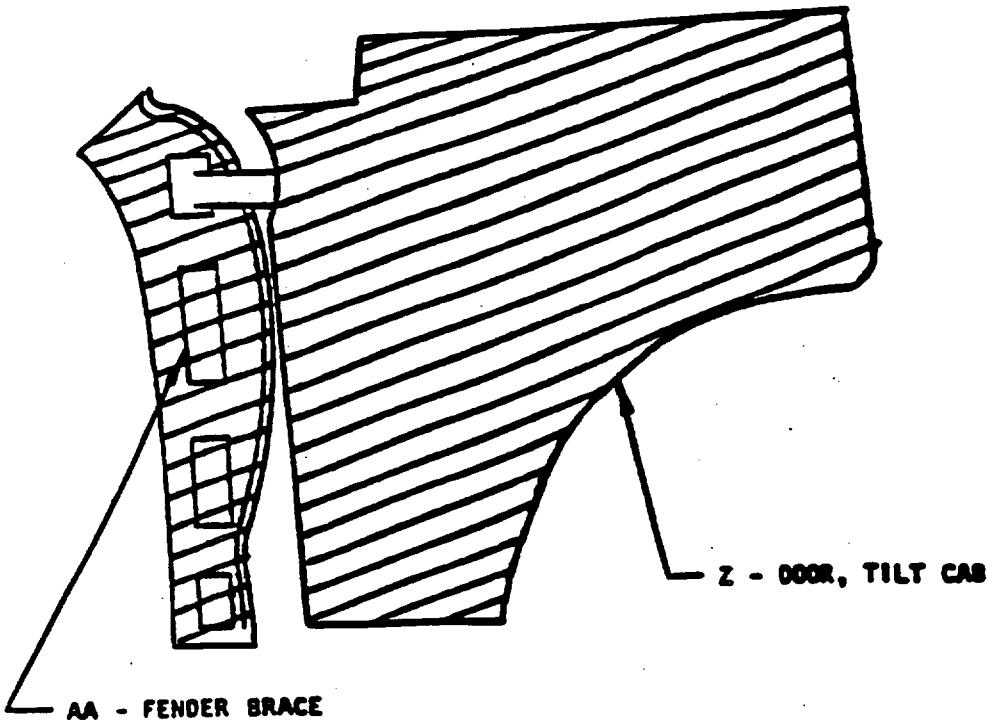

FIGURE 3. Rustproofing - truck assembly - continued.

STANDARDIZATION DOCUMENT IMPROVEMENT PROPOSAL

INSTRUCTIONS: This form is provided to solicit beneficial comments which may improve this document and enhance its use. DoD contractors, government activities, manufacturers, vendors, or other prospective users of the document are invited to submit comments to the government. Fold on lines on reverse side, staple in corner, and send to preparing activity. Attach any pertinent data which may be of use in improving this document. If there are additional papers, attach to form and place both in an envelope addressed to preparing activity. A response will be provided to the submitter, when name and address is provided, within 30 days indicating that the 1426 was received and when any appropriate action on it will be completed.

NOTE: This form shall not be used to submit requests for waivers, deviations or clarification of specification requirements on current contracts. Comments submitted on this form do not constitute or imply authorization to waive any portion of the referenced document(s) or to amend contractual requirements.

DOCUMENT IDENTIFIER (Number) AND TITLE FED-STD-297E FEDERAL STANDARD, RUSTPROOFING, OF COMMERCIAL (NONTACTICAL) VEHICLES

NAME OF ORGANIZATION AND ADDRESS OF SUBMITTER

☐ VENDOR ☐ USER ☐ MANUFACTURER

1. ☐ HAS ANY PART OF THE DOCUMENT CREATED PROBLEMS OR REQUIRED INTERPRETATION IN PROCUREMENT USE? ☐ IS ANY PART OF IT TOO RIGID, RESTRICTIVE, LOOSE OR AMBIGUOUS? PLEASE EXPLAIN BELOW.

A. GIVE PARAGRAPH NUMBER AND WORDING

B. RECOMMENDED WORDING CHANGE

C. REASON FOR RECOMMENDED CHANGE(S)

2. REMARKS

SUBMITTED BY (Printed or typed name and address — Optional)

TELEPHONE NO.

DATE

DD FORM 1 OCT 76 1426 EDITION OF 1 JAN 72 WILL BE USED UNTIL EXHAUSTED.