Downloaded from http://www.everyspec.com

CHANGE NOTICES ARE NOT CUMULATIVE AND SHALL BE RETAINED UNTIL SUCH TIME AS THE ENTIRE STANDARD IS REVISED. RETAIN CHANGE NOTICE 1.

FED. TEST METHOD STD. NO. 228
April 14, 1967
CHANGE NOTICE 2
17 October 1985

FEDERAL TEST METHOD STANDARD

CABLE AND WIRE, INSULATED; METHODS OF TESTING

The following changes which form a part of FED. TEST METHOD STD. NO. 228, dated April 14, 1967, are approved by the Commissioner, Federal Supply Services, General Services Administration, for use by all Federal agencies.

REMOVE: Sections 2, 3, and 4, of January 4, 1984.

ADD: REVISED sections 2, 3, and 4.

ADD: NEW Standard Test Method 2231.

REMOVE: Standard Test Methods 6021 and 6211 of April 14, 1967.

ADD: REVISED Standard Test Methods 6021.1 and 6211.1.

MILITARY INTERESTS:

Custodians

Army - CR
Navy - EC
Air Force - 85

Review Activities

Army - AR, AT
Navy - EC
Air Force - 11, 14, 15, 80, 85, 99
DLA - IS

User Activities

Navy - YD, MC, SH

Agent

DLA - ES

CIVIL AGENCY COORDINATING ACTIVITY:

GSA - FSS

PREPARING ACTIVITY:

Army - CR

DOD project 6145-0888

RETAIN THIS CHANGE NOTICE AND INSERT BEFORE THE TABLE OF CONTENTS OF THIS STANDARD

FSC 6145

DISTRIBUTION STATEMENT A. Approved for public release; distribution is unlimited.

Downloaded from http://www.everyspec.com

SECTION 2

ALPHABETICAL INDEX OF TEST METHOD SUBJECTS

Title	Method No.
Abrasion Resistance	2211.1
Air Oven Test, Insulation and Sheath	4031
Air Pressure Test, Insulation and Sheath	4021
Angle, Braid	1611
Angle, Wrap	1621
Angle of Braid, Metal Armor	1631
Buffing, Insulation and Sheath	3011
Calibration, Tension Testing Machine	3016
Capacitance Change with Time in Water	6271
Carriers, Ends per Carrier, and Ply of Yarns; Braid	8021
Chemical Tests; General	7001
Circumference	1441
Conductor Coating, Ammonium Persulfate	7123
Conductor Coating, Sodium Polysulfide	7121
Coverage, Braid, Metal Armor	8121
Coverage, Wrap or Serving	8131
Crush Resistance	2061
Diameter, Armor Wire	1421
Dielectric Strength, Cloth and Tape	6221
Direction of Lay	8111
Drip, Cable	5141
Drip, Fibrous Covering	5131
Elongation, Armor	2111
Elongation, Insulation and Sheath	3031
Flammability, Horizontal	5211
Flammability, Spark Method	5231
Flammability, Vertical	5221
Flexibility, Armored Cable, Low Temperature	2021
Flexibility, Cotton Covered Electric Cord	2031
Flexibility, Extensile and Retractile Cord	2051
Flexibility, Fibrous Coverings	2041
Flexibility, Fibrous Coverings, Low Temperature	2043
Flexibility, Insulation, Low Temperature	2011
Fluid Immersion	7021
Heat Distortion, Insulation	5021
Heat Shock, Insulation	5011
High Temperature	5031
Identification, Synthetic Elastometers, Insulation and Sheath	7251
Insulation Defects, Spark Test	6211.1
Insulation Shrinkage (Molten Solder Method)	8231
Insulation Strippability	2231
Lay of Twist, Armor Wire	1511
Lay of Twist, Cable	1521
Lead Sheath, Composition	7231
Length of Lay, Wrap or Serving	1531
Melt, Fibrous Covering	5111
Mineral Content, Coverings	7211
Moisture Absorption, Fibrous Covering	8221
Moisture Absorption, Insulation	8211
Opening, Armor	2181
Overlap, Cotton Tape	1711
Oxygen Pressure Test, Insulation and Sheath	4011
Picks Per Inch, Braid	8011
Resistance, Electrical, Conductor	6021.1
Resistance, Electrical, Insulation	6031
Resistance, Electrical, Steel Armor	6011
Resistance to Acid and Alkali	7011
Resistance to Heat, Oxygen, Air, Light, and Ozone; General	4001
Resistance to Light, Insulation and Sheath	4131
Resistance to Oil, Insulation and Sheath	4221
Resistance to Oil, Insulation and Sheath (Recovery Method)	4223
Resistance to Ozone, Insulation and Sheath	4111
Resistance to Petrolatum, Varnished Cloth	4211
Size, Conductor	1431
Specific Gravity; Hydrostatic	8322
Specific Gravity; Pycnometer	8321
Springiness, Armor Wire	2161
Surface Resistance, Finished Wire and Cable	6041
Tearing Strength, Sheath	3111
Tensile Strength, Insulation and Sheath	3021
Tensile Strength, Varnished Cloth Insulation	3171
Tensile Strength and Elongation, Medium Hard-Drawn or Hard-Drawn Conductors	3212
Tensile Strength and Elongation, Soft or Annealed Conductors	3211
Tensile Stress, Insulation and Sheath	3041
Tension Set, Insulation and Sheath	3161
Tension Tests, Insulation and Sheath; General	3001
Test Tube Heat-Aging, Insulation and Sheath	4041
Thickness, Bedding; Diameter Tape	1173
Thickness, Bedding; Micrometer Caliper	1171
Thickness, Braid	1111
Thickness, Cotton Tape; Dial Micrometer	1124
Thickness, Cotton Tape; Micrometer Caliper	1121

Downloaded from http://www.everyspec.com

ALPHABETICAL INDEX OF TEST METHOD SUBJECTS - Continued

Title	Method No.
Thickness, Insulation; Dial Micrometer	1013
Thickness, Insulation; Micrometer Caliper	1011
Thickness, Insulation, Minimum; Pin-Gage Dial Micrometer	1014
Thickness, Insulation; Optical	1018
Thickness, Lead Sheath; Micrometer Caliper (Flat Anvil)	1313
Thickness, Lead Sheath; Micrometer Caliper (Round Anvil)	1311
Thickness, Metal Tape Armor	1211
Thickness, Serving, Diameter Tape	1153
Thickness, Serving; Micrometer Caliper	1151
Thickness, Sheath	1331
Thickness, Varnished Cloth	1051
Thickness, Woven or Braided Metal Armor; Diameter Tape	1223
Thickness, Woven or Braided Metal Armor; Micrometer Caliper	1221
Thickness, Wrap	1141
Tightness, Armor	2171
Toughness, Armor Wire	2131
Voltage Withstand, Insulated Wire and Cable	6111
Voltage Withstand, Insulation, Flexing	6121
Voltage Withstand, Insulation, Flexing, Low Temperature	6131
Weight, Wire or Cable, Conductor and Covering Material	8311
Width, Metal Tape Armor	1411
Yarns per Inch, Fibrous Covering	8031
Yarns per Inch, Varnished Cloth	8033
Yarn Size, Wrap and Serving	8041
Zinc Coating, Steel Armor	7111

Downloaded from http://www.everyspec.com

SECTION 3

NUMERICAL INDEX OF TEST METHODS

Group 1000 - Geometrical Measurements

Title	Method No.	Title	Method No.
Thickness, Insulation; Micrometer Caliper	1011	Thickness, Woven or Braided Metal Armor; Micrometer Caliper	1221
Thickness, Insulation; Dial Micrometer	1013	Thickness, Woven or Braided Metal Armor; Diameter Tape	1223
Thickness, Insulation, Minimum; Pin-Gage Dial Micrometer	1014	Thickness, Lead Sheath; Micrometer Caliper (Round Anvil)	1311
Thickness, Insulation; Optical	1018	Thickness, Lead Sheath; Micrometer Caliper (Flat Anvil)	1313
Thickness, Varnished Cloth	1051	Thickness, Sheath	1331
Thickness, Braid	1111	Width, Metal Tape Armor	1411
Thickness, Cotton Tape; Micrometer-Caliper	1121	Diameter, Armor Wire	1421
Thickness, Cotton Tape; Dial Micrometer	1124	Size, Conductor	1431
Thickness, Wrap	1141	Circumference	1441
Thickness, Serving; Micrometer Caliper	1151	Lay of Twist, Armor Wire	1511
Thickness, Serving; Diameter Tape	1153	Lay of Twist, Cable	1521
Thickness, Bedding; Micrometer Caliper	1171	Length of Lay, Wrap or Serving	1531
Thickness, Bedding; Diameter Tape	1173	Angle, Braid	1611
Thickness, Metal Tape Armor	1211	Angle, Wrap	1621
		Angle of Braid, Metal Armor	1631
		Overlap, Cotton Tape	1711

Group 2000 - Mechanical Tests

Flexibility, Insulation, Low Temperature	2011	Crush Resistance	2061
Flexibility, Armored Cable, Low Temperature	2021	Elongation, Armor	2111
Flexibility, Cotton Covered Electric Cord	2031	Toughness, Armor Wire	2131
Flexibility, Fibrous Coverings	2041	Springiness, Armor Wire	2161
Flexibility, Fibrous Coverings, Low Temperature	2043	Tightness, Armor	2171
Flexibility, Extensile and Retractile Cord	2051	Opening, Armor	2181
		Abrasion Resistance	2211.1
		Insulation Strippability	2231

Group 3000 - Tension Tests

Tension Tests, Insulation and Sheath; General	3001	Tearing Strength, Sheath	3111
Buffing, Insulation and Sheath	3011	Tension Set, Insulation and Sheath	3161
Calibration, Tension Testing Machine	3016	Tensile Strength, Varnished Cloth Insulation	3171
Tensile Strength, Insulation and Sheath	3021	Tensile Strength and Elongation, Soft or Annealed Conductors	3211
Elongation, Insulation and Sheath	3031	Tensile Strength and Elongation, Medium Hard-Drawn or Hard-Drawn Conductors	3212
Tensile Stress, Insulation and Sheath	3041		

Downloaded from http://www.everyspec.com

NUMERICAL INDEX OF TEST METHODS - Continued

Group 4000 - Accelerated Aging Tests

Title	Method No.	Title	Method No.
Resistance to Heat, Oxygen, Air, Light, and Ozone; General	4001	Resistance to Ozone, Insulation and Sheath	4111
Oxygen Pressure Test, Insulation and Sheath	4011	Resistance to Light, Insulation and Sheath	4131
Air Pressure Test, Insulation and Sheath	4021	Resistance to Petrolatum, Varnished Cloth	4211
Air Oven Test, Insulation and Sheath	4031	Resistance to Oil, Insulation and Sheath	4221
Test Tube Heat-Aging, Insulation and Sheath	4041	Resistance to Oil, Insulation and Sheath (Recovery Method)	4223

Group 5000 - Thermal Tests

Heat Shock, Insulation	5011	Drip, Cable	5141
Heat Distortion, Insulation	5021	Flammability, Horizontal	5211
High Temperature	5031	Flammability, Vertical	5221
Melt, Fibrous Covering	5111	Flammability, Spark Method	5231
Drip, Fibrous Covering	5131		

Group 6000 - Electrical Tests

Resistance, Electrical, Steel Armor	6011	Voltage Withstand, Insulation, Flexing	6121
Resistance, Electrical, Conductor	6021.1	Voltage Withstand, Insulation, Flexing, Low Temperature	6131
Resistance, Electrical, Insulation	6031	Insulation Defects, Spark Test	6211.1
Surface Resistance, Finished Wire and Cable	6041	Dielectric Strength, Cloth and Tape	6221
Voltage Withstand, Insulated Wire and Cable	6111	Capacitance Change with Time in Water	6271

Group 7000 - Chemical Tests

Chemical Tests; General	7001	Conductor Coating, Ammonium Persulfate	7123
Resistance to Acid and Alkali	7011	Mineral Content, Coverings	7211
Fluid Immersion	7021	Lead Sheath, Composition	7231
Zinc Coating, Steel Armor	7111	Identification, Synthetic Elastomers, Insulation and Sheath	7251
Conductor Coating, Sodium Polysulfide	7121		

Downloaded from http://www.everyspec.com

NUMERICAL INDEX OF TEST METHODS - Continued

Group 8000 - Miscellaneous Tests

Title	Method No.	Title	Method No.
Picks per Inch, Braid - - - - - - -	8011	Moisture Absorption, Insulation - -	8211
Carriers, Ends per Carrier, and Ply of Yarns; Braid - - - - - - - - - -	8021	Moisture Absorption, Fibrous Covering - - - - - - - - - - - - -	8221
Yarns per Inch, Fibrous Covering -	8031	Insulation Shrinkage (Molten Solder Method) - - - - - - - - - - - - - -	8281
Yarns per Inch, Varnished Cloth - -	8033	Weight, Wire or Cable, Conductor and Covering Material - - - - - -	8311
Yarn Size, Wrap and Serving - - - -	8041	Specific Gravity; Pycnometer - - -	8321
Direction of Lay - - - - - - - - - -	8111	Specific Gravity; Hydrostatic - - -	8322
Coverage, Braid, Metal Armor - - -	8121		
Coverage, Wrap or Serving - - - - -	8131		

Downloaded from http://www.everyspec.com

SECTION 4

SUBJECT INDEX

Subject	Index
Acid, alkali test: Fibrous coverings and armor	Method 7011
Air oven test: Insulation and sheath	Method 4031
Air pressure test: Insulation and sheath	Method 4021
Angle:	
Braid	Method 1611
Metal armor, braided	Method 1631
Wrap	Method 1621
Armor:	
Braided metal:	
Angle	Method 1631
Coverage	Method 8121
Elongation	Method 2111
Thickness	Method 1221
Metal tape:	
Coating, uniformity	Method 7111
Elongation	Method 2111
Flexibility, low temperature	Method 2021
Lay, direction of	Method 8111
Opening	Method 2181
Thickness	Method 1211
Tightness	Method 2171
Width	Method 1411
Nonmetallic: Acid and alkali resistance	Method 7011
Steel:	
Coating, zinc, uniformity	Method 7111
Elongation	Method 2111
Flexibility, low temperature	Method 2021
Opening	Method 2181
Resistance, electrical	Method 6011
Tightness	Method 2171
Wire: Diameter	Method 1421
Armor wire:	
Lay:	
Direction of	Method 8111
Of twist	Method 1511
Springiness	Method 2161
Toughness	Method 2131
Bedding:	
Lay, direction of	Method 8111
Thickness	Methods 1171 and 1173
Braid:	
Angle	Method 1611
Carriers	Method 8021
Ends	Method 8021
Picks per inch	Method 8011
Ply of yarn	Method 8021
Thickness	Method 1111
Buffing: Insulation and sheath	Method 3011
Bunched lay: Definition of	Section 5
Calibration: Tension testing machine	Method 3016
Capacitance: Insulation change	Method 6271
Carriers:	
Braid	Method 8021
Definition of	Section 5
Chemical tests	Group 7000
Circular mil: Definition of	Section 5
Circumference:	
Cable and wire	Method 1441
Conductors	Method 1441
Coatings:	
Armor, zinc coated steel	Method 7111
Conductor coatings:	
Persulfate	Method 7123
Polysulfide	Method 7121
Completed wire and cable:	
Definition of	Secion 5
Composition:	
Insulation and sheath	Method 7251
Lead sheath	Method 7231
Concentric lay: Definition of	Section 5
Conductor:	
Circumference	Method 1441
Coating, uniformity:	
Persulfate	Method 7123
Polysulfide	Method 7121
Definition of	Section 5
Elongation:	
Hard-drawn	Method 3212
Soft, annealed	Method 3211
Insulated, definition of	Section 5
Lay, direction of	Method 8111
Resistance, electrical	Method 6021
Size	Method 1431
Stranded, definition	Section 5
Tensile strength:	
Hard-drawn	Method 3212
Soft, annealed	Method 3211
Weight	Method 8311
Cord, electric: Flexibility	Method 2031
Coverage:	
Armor, braided metal	Method 8121
Wrap or serving	Method 8131
Covering, fibrous:	
Acid and alkali resistance	Method 7011
Flammability:	
Horizontal	Method 5211
Spark	Method 5231
Vertical	Method 5221
Mineral content	Method 7211
Moisture absorption	Method 8221
Yarns per inch	Method 8031
Weight	Method 8311
Defects:	
Insulation, spark test	Method 6211
Definitions of terms	Section 5
Diameter: Armor, wire	Method 1421
Dielectric strength: Cloth and tape	Method 6221

Downloaded from http://www.everyspec.com

SECTION 4

SUBJECT INDEX - Continued

Subject	Index
Direction of lay:	
Definition of	Section 5
Determination of	Method 8111
Distortion, heat: Insulation	Method 5021
Drip test:	
Cable	Method 5141
Fibrous covering	Method 5131
Elastomers: Qualitative tests	Method 7251
Elongation:	
Armor	Method 2111
Conductors:	
Hard-drawn	Method 3212
Soft, annealed	Method 3211
Definition of	Section 5
Insulation and sheath	Method 3031
Ends:	
Definition of	Section 5
Ends per carrier, braid	Method 8021
Flammability	Methods 5211 and 5221
Spark test	Method 5231
Flexibility:	
Armored cable, low temperature	Method 2021
Cord, electric, cotton covered	Method 2031
Cord, extensile and retractile	Method 2051
Fibrous coverings:	
Low temperature	Method 2043
Room temperature	Method 2041
Insulation, low temperature	Method 2011
Fluid immersion	Method 7021
Heat distortion: Insulation	Method 5021
Heat shock: Insulation	Method 5011
High temperature	Method 5031
Insultation:	
Air oven test	Method 4031
Air pressure test	Method 4021
Capacitance test	Method 6271
Composition, qualitative tests	Method 7251
Defects, spark test	Method 6211.1
Definition of	Section 5
Elastomers, qualitative tests	Method 7251
Elongation	Method 3031
Flammability	Methods 5211, 5221, and 5231
Flexibility, low temperature	Method 2011
Flexing	Methods 6121 and 6131
Heat distortion	Method 5021
Heat shock	Method 5011
Light resistance	Method 4131
Strippability	Method 2231
Moisture absorption, mechanical	Method 8211
Oil resistance	Methods 4221 and 4223
Oxygen pressure test	Method 4011
Ozone resistance	Method 4111
Petrolatum resistance	Method 4211
Resistance:	
Definition of	Section 5
Determination of	Method 6031
Set, tension	Method 6031
Spark test	Method 6211
Specific gravity:	
Hydrostatic	Method 8322
Pycnometer	Method 8321
Tensile strength:	
Rubber	Method 3021
Varnished cloth	Method 3171
Tensile stress	Method 3041
Tension set	Method 3161
Test tube heat-aging test	Method 4041
Thickness:	
Dial micrometer	Method 1013
Micrometer caliper	Method 1011
Optical	Method 1018
Pin-gage dial micrometer	Method 1014
Voltage withstand:	
Insulated wire and cable	Method 6111
After flexing	Method 6121
After flexing at low temperature	Method 6131
Lay:	
Bunched, definition of	Section 5
Concentric, definition of	Section 5
Direction of:	
Definition of	Section 5
Determination of	Method 8111
Length of:	
Definition of	Section 5
Wrap or serving	Method 1531
Rope, definition of	Section 5
Twist:	
Definition	Section 5
Armor wire	Method 1511
Cable	Method 1521
Unidirectional, definition of	Section 5
Unilay, definition of	Section 5
Lead: Chemical analysis	Method 7231
Length of lay:	
Definition of	Section 5
Wrap or serving	Method 1531
Light resistance: Insulation and sheath	Method 4131
Median: Definition of	Section 5
Melt test: Fibrous covering	Method 5111
Mineral content: Fibrous covering	Method 7211
Moisture absorption:	
Fibrous covering	Method 8221
Insulation	Method 8121

Downloaded from http://www.everyspec.com

SECTION 4

SUBJECT INDEX - Continued

Subject	Index
Oil resistance: Insulation and sheath	Methods 4221 and 4223
Opening: Armor	Method 2181
Overlap: Cotton tape	Method 1711
Oxygen pressure test:	
Insulation and sheath	Method 4011
Ozone resistance: Insulation and sheath	Method 4111
Pair:	
Shielded, definition of	Section 5
Twisted, definition of	Section 5
Petrolatum: Resistance, insulation and sheath	Method 4211
Picks:	
Braids, picks per inch	Method 8011
Per inch, definition of	Section 5
Pitch diameter: Definition of	Section 5
Ply:	
Braid, ply of yarn	Method 8021
Definition of	Section 5
Yarn, definition of	Section 5
Resistance:	
Abrasion	Method 2211.1
Resistance:	
Crush	Method 2061
Surface, Finished wire and cable	Method 6041
Resistance, electrical:	
Armor, steel	Method 6011
Conductor	Method 6021.1
Insulation	Method 6031
Rope lay: Definition of	Section 5
Serving or wrap:	
Angle	Method 1621
Coverage	Method 8131
Lay:	
Direction of	Method 8111
Length of	Method 1431
Thickness:	
Diameter tape	Method 1153
Micrometer caliper	Methods 1141 and 1151
Yarn size	Method 8041
Sheath:	
Lead:	
Composition	Method 7231
Thickness:	
Micrometer caliper, flat anvil	Method 1313
Micrometer caliper, round anvil	Method 1311
Plastic, rubber:	
Air oven test	Method 4031
Air pressure test	Method 4021
Composition, qualitative tests	Method 7251
Elastomers, qualitative tests	Method 7251
Elongation	Method 3031
Light resistance	Method 4131
Oil resistance	Methods 4221 and 4223
Oxygen pressure test	Method 4011
Ozone resistance	Method 4111
Petrolatum resistance	Method 4211
Specific gravity	Methods 8321 and 8322
Tearing strength	Method 3111
Tensile strength	Method 3021
Tensile stress	Method 3041
Tension set	Method 3161
Test tube heat-aging	Method 4041
Thickness	Method 1331
Shielded pair: Definition of	Section 5
Size:	
Conductor	Method 1431
Yarn	Method 8041
Softening point: Fibrous coverings	Method 5111
Specific gravity:	
Insulation:	
Hydrostatic	Method 8322
Pycnometer	Method 8321
Springiness: Armor wire	Method 2161
Stranded conductor:	
Definition of	Section 5
Tape:	
Cotton:	
Flexibility	Method 2031
Lay, direction of	Method 8111
Overlap	Method 1711
Thickness:	
Dial micrometer	Method 1124
Micrometer caliper	Method 1121
Varnished cloth:	
Dielectric strength	Method 6221
Flammability	Methods 5211, 5221, and 5231
Lay, direction of	Method 8111
Tensile strength	Method 3171
Thickness	Method 1051
Voltage withstand	Methods 6121 and 6131
Tearing strength:	
Definition of	Section 5
Insulation and sheath	Method 3111
Temperature: Testing room humidity and temperature	Section 7
Tensile strength:	
Conductors:	
Hard-drawn copper	Method 3212
Soft, annealed copper	Method 3211
Definition of	Section 5
Insulation and sheath	Method 3021
Varnished cloth	Method 3171

Downloaded from http://www.everyspec.com

SECTION 4

SUBJECT INDEX - Continued

Subject	Index
Tensile stress:	
Definition of - - - - - - -	Section 5
Insulation and sheath - - -	Method 3041
Tension set:	
Definition of - - - - - - -	Section 5
Insulation and sheath - - -	Method 3161
Test tube heat-aging: Insulation and sheath - - - - -	Method 4041
Thickness:	
Armor:	
Braided metal:	
Diameter tape - - - - -	Method 1223
Micrometer caliper - -	Method 1221
Metal tape - - - - - - -	Method 1211
Braid - - - - - - - - - - -	Method 1111
Insulation:	
Dial micrometer - - - - -	Method 1013
Micrometer caliper - - -	Method 1011
Optical - - - - - - - - -	Method 1018
Pin-gage dial micrometer-	Method 1014
Jute bedding:	
Diameter tape - - - - - -	Method 1173
Micrometer caliper - - -	Method 1171
Serving:	
Diameter tape - - - - - -	Method 1153
Micrometer caliper - - -	Method 1151
Sheath:	
Lead, micrometer caliper:	
Flat anvil - - - - - -	Method 1313
Round anvil - - - - - -	Method 1311
Plastic, rubber - - - - - -	Method 1331
Shrinkage - - - - - - - - -	Method 8231
Tapes:	
Cotton:	
Dial micrometer - - - -	Method 1124
Micrometer caliper - -	Method 1121
Metal - - - - - - - - - -	Method 1211
Varnished cloth and tape-	Method 1051
Wrap - - - - - - - - - - -	Method 1141
Thread: Fibrous covering - -	Method 8031
Tightness: Armor - - - - - -	Method 2171
Toughness: Armor wire - - -	Method 2131
Twisted pair: Definition of-	Section 5
Varnished cloth and tape:	
Dielectric strength - - - -	Method 6221
Flammability - - - - - - -	Methods 5211, 5221, and 5231
Flexing, resistance - - - -	Method 2021
Lay, direction of - - - - -	Method 8111
Resistance to petrolatum -	Method 2021
Tensile strength - - - - -	Method 3171
Thickness - - - - - - - - -	Method 1051
Voltage withstand, after flexing:	
Low temperature - - - - - -	Method 6131
Room temperature - - - - -	Method 6121
Voltage withstand:	
Cable and wire - - - - - -	Method 6111
Insulation - - - - - - - -	Methods 6121 and 6131
Weight:	
Cable and wire - - - - - -	Method 8311
Conductor - - - - - - - - -	Method 8311
Covering material - - - - -	Method 8311
Width: Armor, metal tape - -	Method 1411
Wire: Definition of - - - -	Section 5
Wrap and serving:	
Angle of yarn - - - - - - -	Method 1621
Coverage - - - - - - - - -	Method 8131
Lay:	
Direction of - - - - - -	Method 8111
Length of - - - - - - - -	Method 1531
Thickness - - - - - - - - -	Method 1141
Yarn size - - - - - - - - - -	Method 8041
Yarn: Size, definition of -	Section 5

Downloaded from http://www.everyspec.com

INSULATION STRIPPABILITY

1. Scope.

1.1 This method is intended for use in determining the strippability (adhesion between insulation and conductor) of insulated conductors.

2. Specimen.

2.1 The specimen shall be free of splices, surface cracks, or other visible defects and shall be prepared as shown on figure 1. Preparation shall be done carefully.

3. Apparatus.

3.1 The apparatus shall consist of a tensile tester and a test fixture such as shown on figure 2.

4. Procedure.

4.1 The adhesion to conductors test shall be performed with a tensile tester and a test fixture such as shown on figure 2. The diameter of the hole in the test plate shall be .004 ±.001 inch larger than the diameter of the applicable conductor. The conductor extending through the test plate hole shall be pulled with a constant rate of 0.2 - 0.5 inch per minute. Avoid sudden pulls and jerking. Conductor adhesion shall be defined as the highest tensile tester reading obtained when the conductor-to-insulation bond is broken. In performing this test, physical handling of the specimen shall be kept to a minimum to avoid specimen degradation.

5. Results.

5.1 The adhesion to conductor (strippability) requirement, as noted by the reading on the tensile tester, shall meet the specified value.

5.2 Where the insulation is stripped, there shall be no evidence of conductor damage and only a trace of insulation or adhesive remaining which can be easily removed by peeling.

Downloaded from http://www.everyspec.com

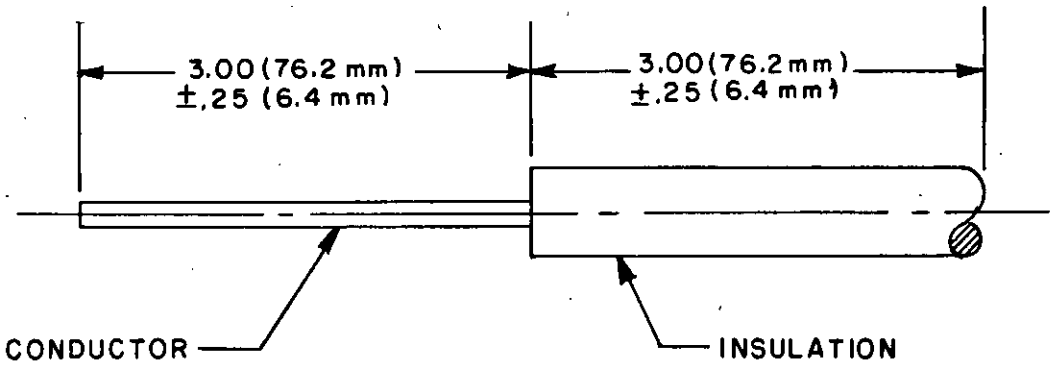

NOTES:
1. Dimensions are in inches.
2. Metric equivalents are given for general information only.

FIGURE 1. Stripping dimensions.

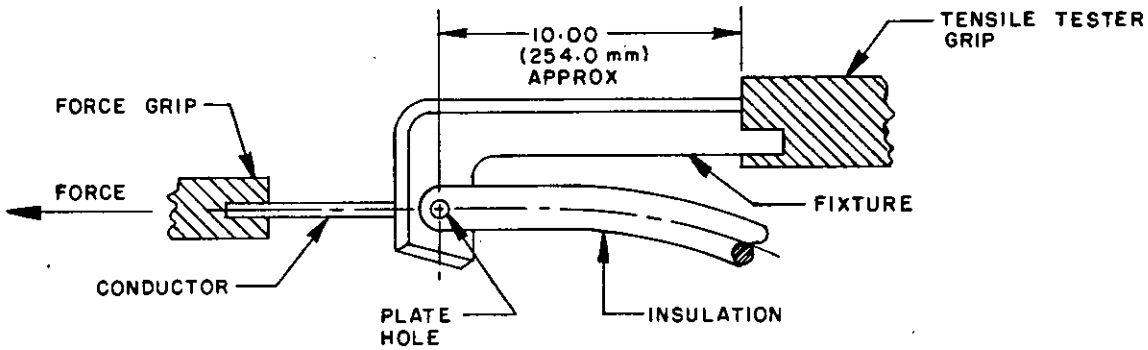

NOTES:
1. Dimensions are in inches.
2. Metric equivalents are given for general information only.

FIGURE 2. Typical test fixture.

Downloaded from http://www.everyspec.com

RESISTANCE, ELECTRICAL CONDUCTOR

1. Scope.

1.1 This method is intended for use in determining the electrical resistance of solid or stranded conductors.

2. Specimen.

2.1 The specimen shall be free of splices, surface cracks, or other visible defects and shall be at least 36 inches in length.

3. Apparatus.

3.1 Resistance shall be measured with a Kelvin bridge, or a suitable four-terminal test method alternate if the resistance is below one ohm. Measurement accuracy shall be within 0.1 percent of reading.

3.2 Resistance may be measured with a Wheatstone bridge, or a suitable alternate if the resistance is above one ohm. Measurement accuracy shall be within one percent of reading.

3.3 Temperature measuring equipment shall be used that will determine the temperature of the conductor to within ±0.5°C (0.9°F).

3.4 A rule shall be used to measure the length of the specimen to an accuracy of ±0.2 percent.

4.0 Procedure.

4.1 If a Wheatstone bridge is used, the resistance of the leads connecting the bridge to the specimen shall be obtained with the leads short-circuited on themselves and the result subtracted from the measured resistance of the specimen.

4.2 If a Kelvin bridge is used, separate current and potential leads shall be used. The current leads shall be attached in such a manner as to give assured contact with all the strands of the conductor. The potential lead clamps shall be such as to encircle the conductor and of small enough width so that the tested length can be assured within the ±0.2 percent accuracy. The distance between the current and potential lead contact shall be greater than three times the diameter of the specimen.

4.3 The test specimen should be allowed to come to the same temperature as the surrounding medium to ensure a correct reading.

4.4 In all resistance measurements, the measuring current raises the temperature of the conductor. Therefore, care should be taken to keep the magnitude of current low, and the time of its use short enough so that the change in resistance cannot be detected.

4.5 To eliminate errors due to contact potential, two readings, one direct and one with current reversed, may be taken in direct succession and the results averaged.

4.6 The resistance shall be measured and recorded, then converted to ohms per unit length. The temperature, conductor length, and conductor size shall be measured and recorded.

5.0 Temperature correction.

Downloaded from http://www.everyspec.com

5.1 When the measurement is made at any other than a reference temperature, the resistance may be corrected for moderate temperature differences to what it would be at the reference temperature as follows:

$$R_T = \frac{R_t}{1 + \alpha_T (t-T)}$$

Where:

R_T = Resistance at reference temperature T.
R_t = Resistance as measured at temperature t.
α_T = Known or given temperature coeffficient of resistance of the specimen being measured at reference temperature T.
T = Reference temperature.
t = Temperature at which measurement is made.

NOTE: The parameter α_T, in the above equation, varies with conductivity and temperature. For copper of 100 percent conductivity and a reference temperature of 20°C, its value is 0.00393. Values at other conductivities and temperatures will be found in NBS Handbook 100 of the National Bureau of Standards. Table 2 lists temperature coefficients for the common electrical conductor materials.

6.0 Report.

6.1 The report shall include:

6.2 Specimen length.

6.3 Conductor size.

6.4 Resistance measured.

6.5 Test temperature.

6.6 Correction calculation (if applicable).

6.7 Method of measurement.

6.8 Calculation to appropriate unit length resistance.

Downloaded from http://www.everyspec.com

INSULATION DEFECTS, SPARK TEST

1. Scope.

1.1 This method is intended for use in detecting defects in the insulation of insulated wires and cables. Presence of a weak spot in the insulation results in a breakdown at that spot. When breakdown occurs, the spark test equipment is arranged to either automatically stop the coiling equipment or produce a visible or an audible signal. From the manufacturer's viewpoint, this method is preferred to the immersion test method as it constitutes a continuous test that can be used at any time after application of the insulation. It is, in effect, instantaneous, whereas the standard voltage withstand test and insulation resistance test require the immersion of the wire in water for a minimum period of 12 hours. It is not intended that the spark test completely replace the voltage withstand test and insulation resistance test.

2. Specimen.

2.1 Unless otherwise specified, the specimen shall be the entire length of wire or cable offered for inspection.

3. Apparatus.

3.1 The apparatus shall be as follows:

3.1.1 Spark tester providing an essentially sinusoidal voltage.

3.1.1.1 A transformer of sufficient capacity to maintain the test voltage specified in the detail specification under all normal conditions of leakage current.

3.1.1.1.1 The core of the transformer and one end of the secondary winding shall be connected to ground.

3.1.1.2 A voltmeter shall be so located in the circuit that it will indicate at all times the actual test voltage applied.

3.1.1.3 The spark tester shall not be simultaneously connected to more than one electrode described in 3.1.2.

3.1.2 Electrode.

3.1.2.1 An electrode, such as a bead-chain or wire brush, which makes direct mechanical contact with the surface of the insulation undergoing test shall be used. A pipe, coiled spring, or the like shall not be acceptable.

3.1.2.2 If the link or bead-chain type of electrode is used, the bottom of the metal electrode enclosure shall be V-shaped. The chains shall have a length appreciably greater than the depth of the enclosure. The width of the trough shall be approximately 1 1/2 inches greater than the diameter of the largest wire or cable to be tested.

3.1.2.3 If a bead-chain type of electrode is used, the beads shall have a diameter of not greater than 3/16 inch. The longitudinal spacing of the chains shall be not more than 1/2 inch. The transverse spacing of the chains shall be not more than 3/8 inch, except that the spacing may be 1/2 inch if the transverse rows of chain are staggered.

3.1.2.4 The electrode shall be provided with a grounded metallic screen, or the equivalent, as a guard against contact by personnel.

3.1.2.5 The length of electrode shall be sufficient to meet the requirements in 4.3.

Downloaded from http://www.everyspec.com

3.1.3 Fault signaling device.

3.1.3.1 A fault signaling device or system shall include a visible signal, a defect recording device, and/or an automatic stop device. The arrangement shall be such that when the fault signal is given, it will be maintained until manually reset.

4. Procedure.

4.1 The spark test shall be conducted as near the end of the manufacturing process as is practicable, preferably as the wire or cable is being cut into shipping lengths.

4.2 The test voltage shall be as specified in the detail specification. The voltmeter shall be connected in the circuit to indicate the actual test potential at all times.

4.3 The conductor or shield of shielded and jacketed cable shall be earth grounded during the spark test. An earth-ground connection shall be made at both the pay-off and take-up reels except that, if the wire is tested for continuity and the conductor is of one integral length, the earth-ground connection need be made at only one point; ie, either the take-up or pay-off reel. In any case, the conductor on a reel at wich an earth-ground connection is made shall be bonded directly to the earth ground on the transformer in the spark tester.

4.4 The length of the electrode is not specified, but the rate of speed at which the wire travels through the electrode shall result in any point on the wire being in contact with the electrode for not less than a total of 18 positive and negative crests of the supply voltage (the equivalent of 9 full cycles of the supply voltage) The maximum acceptable speed of the wire shall be determined by the following formula:

$$\text{Feet per minute} = \frac{5}{9} \times \text{frequency in hertz} \times \text{electrode length in inches}$$

5. Results.

5.1 Unless otherwise specified in the detail specification, the entire delivery of the wire or cable shall be tested.

5.2 Whether the insulation of the entire delivery withstood the specified test voltage without failure shall be recorded.

5.3 The test voltage shall be recorded.