Downloaded from http://www.everyspec.com

ORIGINAL
copy 1

SEI
PROGRAM SUPPORT LIBRARY
RECEIVED JAN 2 5 1985

FAA-D-2494/b
March 14, 1984
SUPERCEDING
FAA-D-2494/1a
/2
/3
/4

DEPARTMENT OF TRANSPORTATION

FEDERAL AVIATION ADMINISTRATION

SPECIFICATION

TECHNICAL INSTRUCTION BOOK MANUSCRIPT: ELECTRONIC, ELECTRICAL, AND MECHANICAL EQUIPMENT, REQUIREMENTS FOR PREPARATION OF MANUSCRIPT AND PRODUCTION OF BOOKS

DOCUMENT CONTROL CENTER

DOCUMENT CONTROL CENTER

Downloaded from http://www.everyspec.com

FOREWORD

This FAA specification sets forth the requirements for the preparation of instruction books for new or contractor-modified equipment. This specification establishes a uniform format and guidance for the content and composition of the books.

This revision updates FAA-D-2494 in establishing uniform practices for the preparation of technical instruction book manuscripts.

Downloaded from http://www.everyspec.com

TABLE OF CONTENTS

Paragraph	Title	Page
1.	Scope	1
1.1	General	1
1.1.1	New equipment	1
1.1.2	Commercial publications	1
1.2	Responsibility	2
1.3	Precedence of requirements	2
2.	Applicable documents	2
2.1	FAA documents	2
2.2	Military documents	2
2.3	Other Government publications	3
2.4	American National Standards Institute (ANSI) publications	3
2.5	Institute of Electrical and Electronics Engineers (IEEE)	3
3.	Requirements	4
3.1	General requirements	4
3.1.1	Writing level	4
3.1.2	Grammatical person and mood	5
3.1.3	Use of directive verbs	5
3.1.4	Nomenclature consistency	5
3.1.5	Development of text	6
3.1.6	Warnings, cautions, and notes	6
3.1.7	Tables	7
3.1.7.1	Uses of tables	7
3.1.7.2	Rules for tables	8
3.1.7.3	Table format	8
3.1.7.4	Numbering and titling of tables	8
3.2	Manuscript plan	8
3.2.1	Prospectus	8
3.2.2	Manuscript schedule	9
3.2.2.1	Manuscript review schedule	9
3.2.2.2	Manuscript validation schedule	9
3.2.3	Verification and validation plan	9
3.3	Manuscripts	11
3.3.1	Draft manuscripts	11
3.3.1.1	In-process reviews	11
3.3.1.2	Typing and format requirements for draft copies	11
3.3.1.2.1	Typing equipment	11
3.3.1.2.2	Paragraph numbering	12
3.3.1.2.3	Paragraph headings	12
3.3.1.2.4	Page numbering	12
3.3.1.3	Draft artwork	12
3.3.2	Final manuscript	12
3.3.2.1	Typing and format requirements for reproducible copy	15
3.3.2.1.1	Machine printouts	15
3.3.2.1.2	Publication number	15
3.3.2.1.3	Publication date	16

Downloaded from http://www.everyspec.com

Paragraph	Title	Page
3.3.2.2	Final artwork	16
3.3.2.2.1	Original used in preparation of illustrations	16
3.3.2.2.2	Overlays on artwork	16
3.3.2.2.3	Covering of artwork	16
3.3.2.2.4	Troubleshooting support data format	16
3.3.2.3	Suggested improvements form	16
3.4	Reference designations, symbols, and abbreviations	20
3.4.1	Reference designations	20
3.4.2	Letter symbols for semiconductor devices	20
3.4.3	Letter symbols and mathematical signs	20
3.4.4	Graphic symbols for circuit elements	20
3.4.5	Mechanical diagram symbols	20
3.4.6	Flow chart symbols	20
3.4.7	Logic diagram symbols	21
3.4.8	Designation for switch gear and industrial control devices	21
3.4.9	Special symbols	21
3.4.10	Acronyms and other abbreviations	21
3.5	Security classification marking	21
3.6	Arrangement of manuscript contents	21
3.6.1	Front cover	21
3.6.1.1	Front cover content	21
3.6.1.2	Cover stock	24
3.6.2	Contractor guarantee	24
3.6.3	List of modifications to specifications	24
3.6.4	List of effective pages	24
3.6.5	Content assurance page	24
3.6.6	Table of contents	26
3.6.7	List of illustrations	26
3.6.8	List of tables	26
3.6.9	Family tree chart	26
3.6.10	Section 1 of instruction book, general information and requirements	28
3.6.10.1	Introduction	28
3.6.10.2	Equipment description	28
3.6.10.3	Relationship of units	28
3.6.10.4	Equipment specification data	28
3.6.10.4.1	Nameplate data	30
3.6.10.4.2	Functional characteristics	30
3.6.10.4.3	External power requirements	30
3.6.10.4.4	Rated output	30
3.6.10.4.5	Environmental characteristics	30
3.6.10.5	Equipment and accessories supplied	30
3.6.10.6	Equipment required but not supplied	30

Downloaded from http://www.everyspec.com

Paragraph	Title	Page
3.6.11	Section 2 of instruction book, technical description	31
3.6.11.1	Simplified theory of operation	31
3.6.11.2	Detailed theory of operation	31
3.6.11.2.1	Equivalent circuits	32
3.6.11.2.2	Timing diagrams	32
3.6.11.2.3	Logic circuits	32
3.6.11.2.4	Mechanical functions	36
3.6.12	Section 3 of instruction book, operation	36
3.6.12.1	Controls and indicators	36
3.6.12.2	Turn-on and checkout	36
3.6.12.3	Remote monitoring and control	36
3.6.12.4	Equipment shutdown	36
3.6.13	Section 4 of instruction book, standards and tolerances	39
3.6.13.1	Parameter	39
3.6.13.2	Procedure paragraph reference	39
3.6.13.3	Standard	39
3.6.13.4	Initial tolerance limit	39
3.6.13.5	Operating tolerance limit	39
3.6.13.6	Interconnecting cables and circuits	39
3.6.13.7	Remote monitor and alarms	39
3.6.14	Section 5 of instruction book, periodic maintenance	41
3.6.14.1	Tabular presentation	41
3.6.14.2	Performance checks	41
3.6.14.3	Other onsite maintenance	41
3.6.14.4	Offsite maintenance	41
3.6.15	Section 6 of instruction book, maintenance procedures	43
3.6.15.1	Content	43
3.6.15.2	Format	43
3.6.15.3	Performance check procedures	43
3.6.15.4	Other maintenance procedures	43
3.6.15.5	Special maintenance procedures	43
3.6.16	Section 7 of instruction book, corrective maintenance	44
3.6.16.1	Onsite corrective maintenance	44
3.6.16.2	Offsite repair	44
3.6.16.3	Test equipment	44
3.6.16.4	Overhaul, maintenance, and repair standards	44
3.6.16.5	Packing instructions	45
3.6.17	Section 8 of instruction book, parts list	46
3.6.17.1	Parts list format	46
3.6.17.2	Use of latest JAN/MIL designations	48
3.6.17.3	Design change incorporation	48
3.6.17.4	Electrical parts	48

Downloaded from http://www.everyspec.com

Paragraph	Title	Page
3.6.17.5	Mechanical data	52
3.6.17.6	Transformer size data	52
3.6.17.7	Lubrication data	52
3.6.17.8	Indicating fuse holder	53
3.6.17.9	Indicator lights	53
3.6.17.10	Tube sockets	53
3.6.17.11	Listing of plug-in modules or printed wiring circuits	53
3.6.17.12	List of manufacturers	53
3.6.18	Section 9 of instruction book, installation, integration, and checkout	54
3.6.18.1	Site information	54
3.6.18.2	Installation drawings	55
3.6.18.3	Unpacking and repacking	55
3.6.18.4	Input requirement summary	55
3.6.18.5	Installation procedures	55
3.6.18.6	Inspection	55
3.6.18.7	Initial startup and preliminary testing	56
3.6.18.8	Installation verification test	56
3.6.19	Section 10 of instruction book, computer software	57
3.6.19.1	Program hierarchy	57
3.6.19.2	Program descriptions	57
3.6.19.2.1	Program purpose	57
3.6.19.2.2	Program capacity	57
3.6.19.2.3	Interface	57
3.6.19.2.4	Program input data	58
3.6.19.2.5	Program output data	58
3.6.19.2.6	Database descriptions	58
3.6.19.2.7	Program documentation	58
3.6.19.3	Listings	58
3.6.19.3.1	Program listings	58
3.6.19.3.2	Cross-reference listings	59
3.6.19.3.3	Load maps	59
3.6.20	Section 11 of instruction book, troubleshooting support data	60
3.6.20.1	Method of presentation	60
3.6.20.1.1	Contractor's commercial publications	60
3.6.20.1.2	Standard (8-1/2 by 11-inch) binding	60
3.6.20.1.3	Separate oversize (11- by 17-inch) binding	60
3.6.20.2	Legibility	61
3.6.20.3	Numbering and titling	61
3.6.20.4	Size of illustrations	61
3.6.20.5	Block diagrams	63
3.6.20.6	Major function diagram	63
3.6.20.7	Schematic diagrams	63
3.6.20.7.1	Diagrams for analog equipment	65
3.6.20.7.2	Diagrams for functional entities	65
3.6.20.8	Functional circuits	65
3.6.20.9	Nomenclature and reference designations	66
3.6.20.10	Discrete circuit element data	66
3.6.20.11	Identification of adjustments and controls	66
3.6.20.12	Test points	66
3.6.20.13	Photographs	66
3.6.20.14	Continuous-tone illustrations	67

Downloaded from http://www.everyspec.com

Paragraph	Title	Page
3.6.20.15	Printed circuit board illustrations	67
3.6.20.16	Callouts	67
3.6.20.17	Leader lines	69
3.6.20.18	Power distribution diagram	69
3.6.20.19	Wiring diagrams	69
3.6.20.20	Cabling diagrams	69
3.6.20.21	Mechanical drawings	69
3.6.20.22	Piping diagram	69
4.	Quality assurance provisions	70
4.1	Responsibility for inspection	70
4.1.1	Contractor inspection	70
4.1.2	Inspection of artwork	70
4.1.3	Proofreading	70
4.1.4	Completeness and continuity	70
4.1.5	Assembly instructions	70
4.2	Quality program requirements	71
4.2.1	Personnel	71
4.2.2	Coordination	71
4.3	Validation	71
4.4	Validation of changes	72
4.5	Verification	72
4.6	Government inspection	72
5.	Preparation for delivery	72
5.1	Packaging of reproducible (camera-ready) copy	72
5.2	Packaging of original artwork	72
5.3	Printing instructions	72
5.3.1	Page size	72
5.3.2	Paper stock	73
5.3.3	Negatives	73
5.3.4	Printing	73
5.3.5	Drilling	73
5.4	Binding	73
5.5	Review and acceptance of printed books	74
5.6	Packaging of books for delivery	74
	Summary of Definitions	103
	Acronyms and Abbreviations	105

Downloaded from http://www.everyspec.com

LIST OF FIGURES

	Title	Page
Figure 1	Manuscript schedule	10
Figure 2	Right-hand page format	13
Figure 3	Left-hand page format	14
Figure 4	Identification, marking, and cover for artwork	17
Figure 5	Typical front cover, troubleshooting support data volume	18
Figure 6	Suggested improvements to equipment instruction book	19
Figure 7	Typical front cover	23
Figure 8	Content assurance page	25
Figure 9	Family tree chart	27
Figure 10	Relationship of units	29
Figure 11	Functional flow diagram	75
Figure 12	Signal flow diagram	77
Figure 13	Logic circuit diagram	33
Figure 14	Integrated circuit logic diagrams	34
Figure 15	Integrated circuit data center	79
Figure 16	Machine logic diagram	35
Figure 17	Intermediate logic diagram	81
Figure 18	Controls and indicators presentation . . .	37
Figure 19	Sample turn-on and checkout tabular format	38
Figure 20	Example of standards and tolerances table .	40
Figure 21	Signal flow diagram	42 & 83
Figure 22	Parts list format	47
Figure 23	Oversize sheet dimensions	62
Figure 24	Foldout page dimensions	64
Figure 25	Sample block diagram of chassis with plug-in units	85
Figure 26	Sample chassis schematic diagram	87
Figure 27	Sample schematic breakdown to component level showing IF amplifier	89
Figure 28	Printed circuit board	91
Figure 29	Use of leader lines for callouts	68
Figure 30	Power distribution diagram (sheet 1 of 2) .	93
Figure 30	Power distribution diagram (sheet 2 of 2) .	95
Figure 31	Sample wiring diagram	97
Figure 32	Mechanical schematic	99
Figure 33	Piping diagram	101
	Appendix 1 - Commercial Instruction Books	
	Index	

Downloaded from http://www.everyspec.com

SUPERSEDING
FAA-D-2494/1a
/2
/3
/4

TECHNICAL INSTRUCTION BOOK MANUSCRIPTS: ELECTRONIC, ELECTRICAL, AND MECHANICAL EQUIPMENT, REQUIREMENTS FOR PREPARATION OF MANUSCRIPT AND PRODUCTION OF BOOKS

1. SCOPE

1.1 General. - This specification sets forth the requirements for the preparation of instruction books for new or contractor-modified equipment manufactured for the Federal Aviation Administration (FAA). Its purpose is to establish a uniform format and guidance for the content and composition of the books. Instruction books prepared under the requirements of this specification are necessary for installation, operation, maintenance, training, and supply support of the equipment.

1.1.1 New equipment. - Instruction books supporting equipment specifically designed for the FAA shall be prepared as delineated in this specification.

1.1.2 Commercial publications. - In contracts involving the purchase of off-the-shelf equipment, commercially prepared instruction books shall be subject to review by the Contracting Officer (CO) or his designated representative for compliance with the critical requirements of this specification. Criteria to be used as a guide for acceptance appears in appendix I.

Downloaded from http://www.everyspec.com

1.2 Responsibility. - The equipment contractor is responsible for the preparation of the instruction book manuscript and delivery of original artwork and reproducible (camera-ready) copy in accordance with the requirements of this specification. Those requirements for the printing, binding, and packaging of the instruction books are the responsibility of the Federal Aviation Administration, Department of Transportation, and the Government Printing Office (GPO).

1.3 Precedence of requirements. - When conflict exists between the requirements of the contract and this specification, the contract shall take precedence. When conflict exists between the requirements of this specification and its referenced documents, this specification shall take precedence. Where the requirements of the GPO Style Manual conflict with the requirements of any other document referenced herein, the requirements of the other referenced documents shall apply.

2. APPLICABLE DOCUMENTS

2.1 FAA documents. - The following FAA documents of the issues in effect on the date of the invitation for bids (IFB) or request for proposals (RFP) form a part of this specification and apply to the extent specified herein.

FAA-G-1210	Provisioning Technical Documentation
FAA Order 6200.4	Test Equipment Management Handbook
FAA Order 1320.37	Contractor Developed Equipment Instruction Books
FAA Order 1720.15	Printing, Binding, Distribution and Editorial Service Request
FAA-STD-010	Graphic Symbols for Digital Logic Diagrams
FAA-STD-018	Computer Program Quality Requirements
FAA-SRDS-140-SDS-1	Software Documentation Standards for Program Development

2.2 Military documents. - The following military documents of the issues in effect on the date of the IFB or RFP form a part of this specification and are applicable to the extent specified herein.

MIL-T-27	Transformer and Inductor (Audio, Power and High Power Pulse), General Specification for
MIL-STD-17B-1	Mechanical Symbols (Other Than Aeronautical, Aerospace, and Spacecraft Use)

Downloaded from http://www.everyspec.com

MIL-STD-17B-2	Mechanical Symbols for Aeronautical, Aerospacecraft and Spacecraft Use
MIL-STD-27	Designations for Electric Power Switch Gear Devices and Industrial Control Devices

2.3 Other Government publications. - The following publications form a part of this specification and are applicable to the extent specified herein.

U.S. Government Printing Office Style Manual

H4-1	Cataloging Handbook, Federal Supply Code for Manufacturers
DOD 5220.22M	Industrial Security Manual for Safeguarding Classified Information
PPP-B-636s	Federal Specifications, Fiberboard Containers

2.4 American National Standards Institute (ANSI) publications. - The following ANSI publications of the issue in effect on the date of the IFB or RFP form a part of this specification and are applicable to the extent specified herein.

ANSI X3.9-1978	American National Standard Programming Language FORTRAN
ANSI X3.5	Flowchart Symbols for Information Processing
ANSI Y1.1	Abbreviations for Use on Drawings and in Text
ANSI Y10.19	Letter Symbols for Units Used in Science and Technology
ANSI Z 210.1-1976	Metric Practice
ANSI Y32.2	Graphic Symbols for Electrical and Electronic Diagrams
ANSI Y32.16	Reference Designations for Electrical and Electronic Parts and Equipment

2.5 Institute of Electrical and Electronics Engineers (IEEE). - The following IEEE standard of the issue in effect on the date of the IFB or RFP forms a part of this specification and is applicable to the extent specified herein.

Standard 255	Semiconductor Devices, Letter Symbols for

Downloaded from http://www.everyspec.com

(Copies of this specification and other applicable FAA specifications, standard and handbook may be obtained from the Contracting Officer in the Federal Aviation Administration Office issuing the invitation for bids or request for proposals. Requests should fully identify material desired; i.e., specification, standard, amendment, and drawing numbers and dates. Requests should cite the invitation for bids, request for proposals, or the contract involved or other use to be made of the requested material.)

(Copies of Cataloging Handbook H4-1, GPO Style Manual, and Industrial Security Manual may be purchased from the Superintendent of Documents, U.S. Government Printing Office, Washington, D.C. 20402.)

(Information on obtaining copies of ANSI publications may be obtained from the American National Standards Institute, 1430 Broadway, New York, NY 10018.)

(Information on obtaining copies of IEEE Standard 255 may be obtained from the Institute of Electrical and Electronics Engineers, 345 East 47th Street, New York, NY 10017.)

3. REQUIREMENTS

3.1 General requirements. - The requirements delineated in this section of the specification apply to the entire manuscript. Unless a requirement specifically states that it does not apply to either the draft or the final copy, compliance is required for both. Manuscript includes all applicable text, photographs, and drawings. Drawings referenced herein that are of foldout size are all presented at the end of this specification. Foldouts are identified in the referencing text.

3.1.1 Writing level. - In preparing the text of the instruction book manuscript, the basic technical writing rule, keep it simple, must be observed. The degree of simplicity will be influenced by the intended use of each section of the instruction book and the type of audience addressed therein. Generally, the audience for each intended use is as follows:

(a) Training may be in a classroom at the FAA Academy or in the field and may, possibly be to the self-instruction level. Trainees can be expected to possess a fundamental knowledge relating to the type of equipment involved but no training or experience on the specific equipment. The educational level of most trainees can be expected to be that of a high school graduate with some technical school background. Therefore, those portions of the book used for training must be written accordingly.

(b) Installation and integration of equipment is accomplished by contractor personnel, by FAA personnel, or by a combination of both. Educational levels may be mixed, and installation personnel may or may not be familiar with the equipment.

Downloaded from http://www.everyspec.com

Writing for this section must be at a level that permits completion of all tasks by personnel unacquainted with the specific equipment..

(c) Operation of the equipment must be presented at a level that allows self-training by a site technician.

(d) Those sections of the text dealing with maintenance, overhaul, repair, and calibration require a two-level approach. Periodic maintenance of new equipment will be minimal and will usually be performed by technicians. Required replacement will not involve overhaul and calibration. These tasks will involve only complete chassis, modules, or plug-in boards or components. In some cases, corrective maintenance may also be at this level. It can, however, extend to far greater depth where component level replacement may be required/performed by personnel with varying levels of educational and vocational experience ranging from technician to higher level field personnel to depot level and engineering support personnel. Therefore, each task must be carefully weighed and presented at a level commensurate with the depth of the task itself.

(e) Theory of equipment operation will also require a two-level presentation. For the technician, the text shall address theory only to the replaceable-unit level discussed in the preceding paragraph. This theory shall be supported by congruent block diagrams sufficiently detailed for trouble-shooting at this level. A detailed theory of operation shall be provided for use in the resolution of problems to the component level. Detailed schematic diagrams shall be provided to support and complement the text.

3.1.2 Grammatical person and mood. - The second person imperative mood shall be used where the text directs the reader to take some kind of action. Examples of this are "Remove test set from carrying case" and "Turn R15 fully clockwise." The third person indicative mood shall be used for description and discussion. Examples are "When switch A is in the ON position, lamp 34 lights" and "When the output of this gate is high, triggers to the multivibrator are inhibited." Use active voice wherever possible. Pronouns may be used when their use will not cause confusion.

3.1.3 Use of directive verbs. - Use the verb "shall" to denote any mandatory action to be taken. Use the verb "may" to denote permission or a nonmandatory option. Because of the variance in the interpretation of the verb "should," its use is to be avoided.

3.1.4 Nomenclature consistency. - Nomenclature shall be consistent throughout the publication. Part nouns and modifying words in the text shall be the same as those appearing in parts lists and on supporting diagrams and drawings.

Downloaded from http://www.everyspec.com

3.1.5 Development of text. - The GPO Style Manual shall be used as a general guide for capitalization, punctuation, compound word forms, numerals in text, and spelling. Abbreviations shall conform to ANSI Y1.1. Acronyms and abbreviations shall be defined where they first appear in the text and listed again in a glossary at the end of the instruction book. The following guidelines shall also apply:

(a) Avoid the use of quotation marks and underlining for emphasis (except in warnings, cautions, or notes).

(b) Avoid technical phraseology requiring a specialized knowledge, except where no other wording will convey the intended meaning.

(c) Avoid superfluous words and phrases. Avoid ambiguity which may result in the divergent meanings of a word; example: replace shall not be used if reinstall is intended.

(d) Provide descriptive headings for sections, paragraphs, etc., avoiding identical and miscellaneous headings.

(e) Avoid the use of indefinite nouns or pronouns. Use specific terminology such as sensor, transmitter, amplifier, or recorder.

(f) When listing standards and tolerances, address only the specific equipment for which the instruction book is being prepared, not the entire system of which it is a part. If necessary because of system tie-in and interaction, those areas of the instruction book dealing with operating and maintaining the equipment may be extended as required into the system level.

(g) No FAA policy statements shall be made.

3.1.6 Warnings, cautions, and notes. - Warnings and cautions shall precede the text to which each applies, but notes may precede or follow applicable text depending on the material to be highlighted. The headings shall be typed in all capitals and centered above the material to be presented; the material itself shall be centered on the page. "WARNING" shall be enclosed in a solid black border. Warnings, cautions, and notes shall not contain procedural steps nor shall they be numbered. When a warning, caution, or note consists of two or more paragraphs, the heading WARNING, CAUTION, or NOTE shall not be repeated above each paragraph. If it is ever necessary to precede a paragraph by both a warning and a note, or a caution and a note, etc., they shall appear in the sequence stated above, namely, warnings, cautions, notes. Such inserts in the text shall be short and concise and be used to emphasize important and critical instructions. They are defined as follows:

Downloaded from http://www.everyspec.com

WARNING: An operating procedure, practice, etc., which, if not correctly followed, could result in personal injury or loss of life. The word WARNING shall be followed by a brief description of the risk involved and of the required actions to be taken. For example, where the procedure is to remove a cover that could possibly cause exposure to radiation, the warning notice shall be shown as follows:

WARNING

Removal of the ion tube cover may result in exposure to radiation. Wear protective radiation equipment when performing the following operation. Do not remove the cover when power is on.

CAUTION: An operating procedure, practice, etc., which if not strictly observed, could result in damage to, or destruction of, equipment.

NOTE: An operating procedure, condition, etc., the nature of which requires that it be highlighted.

3.1.7 Tables. - One of the most effective ways to present detailed and lengthy information in the least amount of space is through a tabular presentation. Care must be used, however, in the preparation lest the purpose be defeated. Tables that are overcrowded or appear too busy are often difficult to interpret. Limit the information to only that which is truly needed. The tables appearing within this specification provide good examples of format and content.

3.1.7.1 Uses of tables. - Tables can be used to present a variety of information. Some of these are:

(a) Listing of performance standards and operating tolerances.

(b) Functions of controls and indicators.

(c) Operating parameters.

(d) Turn-on and checkout procedures.

(e) Performance checks.

(f) Procedures for preventive and corrective maintenance, alignment, and calibration.

Downloaded from http://www.everyspec.com

3.1.7.2 Rules for tables. - Use the following guidelines in preparing tables:

(a) Write all action and indication statements in terse style using or as few words as possible to express the meaning.

(b) Omit articles (a, an, the) except where needed for clarity.

(c) Begin action or observation instructions with a verb.

(d) Omit unnecessary words when the meaning is clear.

(e) Include only one action or indication in each step.

(f) If tolerances are given, ensure that they are values for normal use or wear rather than original manufacturer's limits (if these values differ).

(g) When one column of a step contains no information, place three dots (...) in the column to indicate the column was intentionally left blank.

3.1.7.3 Table format. - Tables shall be arranged so that horizontal lines of data are easily followed across the page without danger of inadvertently deviating to the line above or below. Acceptable methods of meeting this requirement include ruled horizontal lines between each line of data, or double spacing of lines of data. Another method that will meet the requirement, provided each horizontal line has an entry in each vertical column, is to single space horizontal lines of data in groups of not over five, with double spacing or ruled horizontal lines between groups. Type for tables shall be a minimum of 8 points for listings and 10 points for table numbers and titles.

3.1.7.4 Numbering and titling of tables. - A number and descriptive title shall be assigned each table and shall be centered above the table. The number shall consist of the section number, followed by a dash and a number representing the numerical sequence of the table within the section. This is followed by a period, two spaces, and the title. The numbering of tables in accepted commercial publications need not be changed to comply with this requirement.

3.2 Manuscript plan. - An instruction book manuscript plan shall be prepared using charts, graphs, and narrative to describe the contractor's plan for complying with the requirements of this specification. All content requirements of this specification shall be included unless specifically excluded by the Government. The plan shall include a schedule for manuscript preparation, review, and validation. Unless specified otherwise in the contract, the manuscript plan shall be submitted to the Contracting Officer for approval on or before 30 calendar days after contract award.

3.2.1 Prospectus. - The manuscript plan shall include a schedule for submittal and approval of a prospectus for the manuscript. It

Downloaded from http://www.everyspec.com

shall be in the form of a detailed outline, developed in accordance with the content requirements of this specification and prepared to the level of paragraphing necessary to show the major physical and functional aspects of planned coverage. Each section and paragraph title shall be followed by a brief statement outlining the data to be presented and the planned approach. A listing of illustrations, charts, tables, and graphs shall be included. Government approval of the prospectus must be obtained before work on the manuscript begins.

3.2.2 Manuscript schedule. - The manuscript schedule shall depict the events and submission dates the contractor proposes for ensuring that instruction books are delivered with the equipment in accordance with the contract schedule and the statement of work. The schedule shall indicate preparation time, in-process review time, validation time, and final review time. Figure 1 is a sample of how a manuscript schedule may appear. The format shall be similar but not necessarily identical to that shown. Consideration must be given to the complexity and development time of the equipment and its documentation. The schedule may show additional breakdowns to sections or modules of the complete manuscript. The CO shall evaluate and, if needed, require revision of the contractor's proposed schedule.

3.2.2.1 Manuscript review schedule. - The manuscript review portion of the manuscript schedule shall designate the periods set aside for in-process reviews of completed sections of manuscript copy at the contractor's facility. The schedule shall be based on a realistic evaluation of anticipated manuscript preparation progress. The review time allotted shall be adequate to perform a complete evaluation of the technical portion of the manuscript for adequacy and accuracy as well as an evaluation of the content and format for compliance with the requirements of this specification. The final review of the draft manuscript shall be scheduled to precede validation. The final review of the reproducible (camera-ready) copy shall be scheduled to follow validation.

3.2.2.2 Manuscript validation schedule. - Manuscript validation shall be scheduled to follow completion of draft manuscript preparation and review. The validation portion of the manuscript schedule shall indicate the period set aside for validation of the manuscript against the equipment. Adequate time shall be allotted for validation of procedures for installation, operation, maintenance, troubleshooting, and overhaul.

3.2.3 Verification and validation plan. - Within the number of days specified by the contract schedule, the contractor shall provide the CO with a plan for accomplishment of the verification and validation requirements described in section 4 of this specification. The procuring activity reserves the right to inspect, reject, and require revision of the plan. This right must be exercised within the number of days specified by the contract schedule. Reviews other than in-process reviews may be performed either on a chapter-by-chapter

Downloaded from http://www.everyspec.com

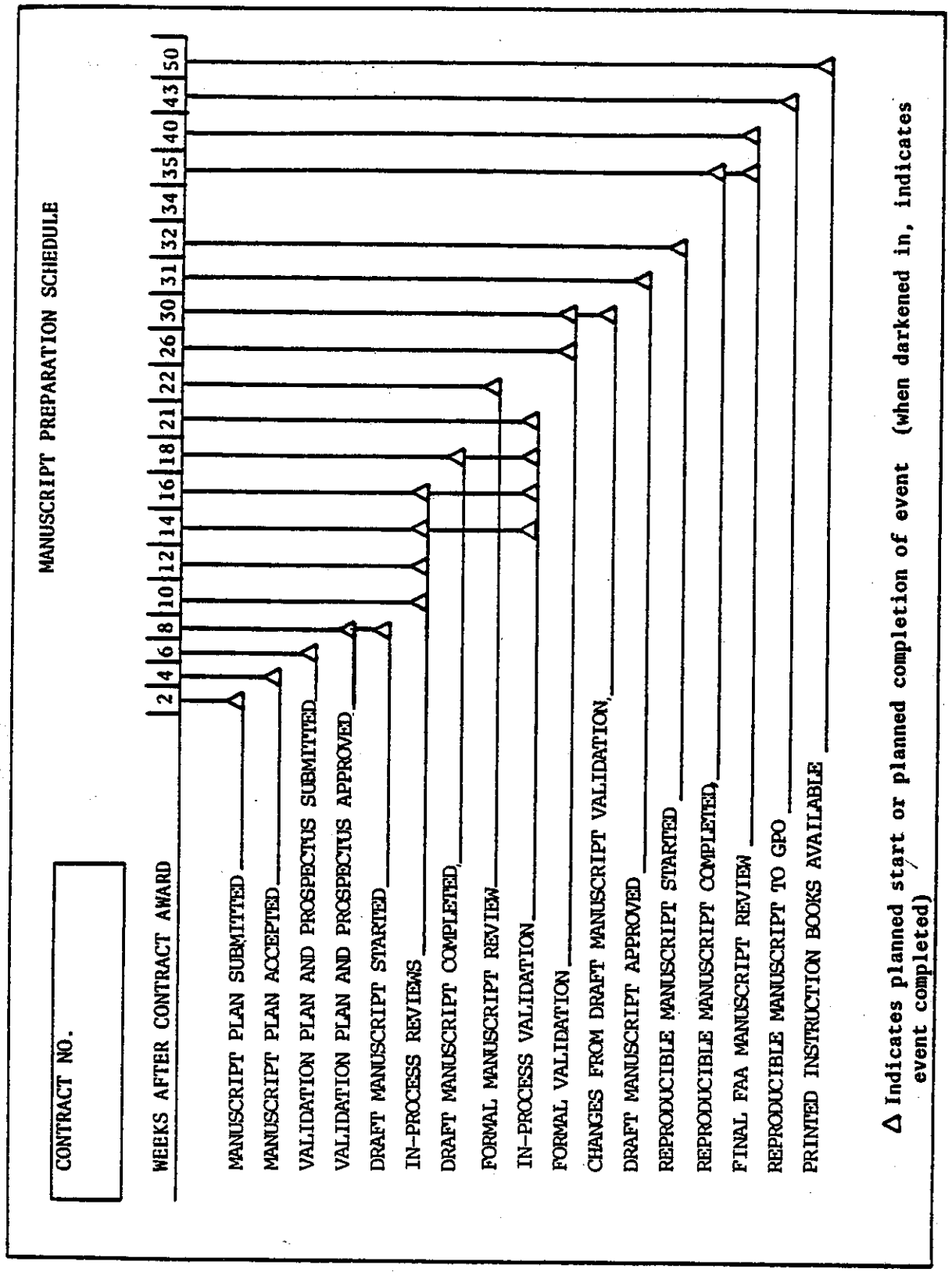

Figure 1. Manuscript Schedule

Downloaded from http://www.everyspec.com

basis during preparation of the manuscript or upon completion of the manuscript. The plan shall provide a schedule of reviews indicating completion dates for each of the tasks listed in 4.3, 4.4, and 4.5.

3.3 Manuscripts. - Two kinds of manuscript copy are required. One is a draft manuscript prepared for in-process review, formal comment submittals by reviewers, and validation; the other is a reproducible (camera-ready) copy prepared for the printer in accordance with the requirements of this specification.

3.3.1 Draft manuscripts. - The contractor shall prepare a draft manuscript in accordance with the approved manuscript plan. With the exception of print quality, spacing, and certain minor differences discussed herein, the requirements for draft copies are the same as those for the final copies. Content, accuracy, and format will be checked closely during in-process reviews.

3.3.1.1 In-process reviews. - In-process reviews of completed manuscript sections may be conducted at the contractor's facility or as determined by the Contracting Officer and shall be accomplished as listed in the manuscript schedule. These reviews of documentation and artwork will be made by the Government, as necessary, to ensure that specification and schedule requirements are being met. The contractor shall provide any required assistance during these reviews. The number of draft copies required for in-process reviews will be specified in the contract. Copies of the reviewed manuscript shall then be submitted to FAA headquarters for marking up and formal submittal of comments to the contractor. The contractor shall prepare a clean, smooth-typed validation manuscript incorporating all accepted changes in text and drawings resulting from the in-process review. Copies of this shall be submitted to the CO for approval in accordance with the dates specified in the approved manuscript plan and schedule. Along with this, the contractor shall submit a list of all comments received, indicating those accepted and incorporated into the revised draft and those not accepted, along with the reason for rejection.

3.3.1.2 Typing and format requirements for draft copies. - Draft manuscript text shall be typed on 8-1/2- by-11-inch, 50-pound, offset white paper on one side only. Typing shall be double spaced, be free of typographical errors, and be contained within an image field no larger than 6-3/4 by 9-3/16 inches. Text shall be typed in a single column and be justified to the left margin only. The layout for right- and left-hand pages is shown in figures 2 and 3, respectively.

3.3.1.2.1 Typing equipment. - Typing may be accomplished by standard typewriters, word processors, or any other office equipment capable of meeting the requirements herein. Type shall be 10- or 12- point, medium, elite or Roman style, with 12-pitch spacing. For tabular work, 8-point type is acceptable. Cloth ribbons may be used for draft typing if legible photocopies can be made.

Downloaded from http://www.everyspec.com

3.3.1.2.2 Paragraph numbering. - Paragraph numbers shall consist of the section number followed by a second number, starting with "1" for the first main paragraph in each section, and continuing consecutively for each main paragraph within the section. Subparagraph numbers shall be formed by additional numbers, using the period separation system for numbering and for indicating subordination. The example below shows graphically the paragraph number system. Paragraph numbers shall not be indented.

SECTION	PARAGRAPH	SUBPARAGRAPHS	
3.	3.1	3.1.1	
		3.1.2	3.1.2.1
			3.1.2.2

3.3.1.2.3 Paragraph headings. - Main paragraphs shall be titled and in all capitals. Subparagraphs need not be titled, but if any subparagraph is titled, then all subparagraphs of the same subordination shall be titled. Titles shall be followed by a period, a dash, and two character spaces before text. Paragraph titles shall be underscored. Only the first letter of principal words in subparagraph titles shall be capitalized.

3.3.1.2.4 Page numbering. - Pages containing front matter (located prior to section 1) shall be numbered sequentially with lowercase equivalents of Roman numerals. Pages in subsequent sections shall contain the Arabic section number followed by a dash and a sequential Arabic page number. For example, for page 4 in section 3, the page number is 3-4. Should the complexity of the equipment and the instruction book require partitioning into volumes and sections beyond the scope outlined in this specification, page numbering shall reflect this expansion and shall be such that no two pages of the instruction book bear identical numbers. If a section ends on an odd-numbered page, the page shall be backed by a blank page and shall contain the number for the page on which the data appears and for the unused page; e.g., 3-21/3-22. Page numbers shall be located in the areas shown in figures 2 and 3. Each section starts on a right-hand (odd-numbered) page. Page numbering for foldout sheets is similar. See 3.6.20.3 for exact requirements.

3.3.1.3 Draft artwork. - Requirements for the construction of draft artwork are identical to those for the final manuscript. The quality of draft artwork reproduction, however, need not be the same as long as the work is entirely legible. Paragraph 3.6.20 defines the requirements for artwork.

3.3.2 Final manuscript. - Upon receipt of approval of the draft manuscript from the CO, the contractor shall prepare a reproducible (camera-ready) copy, with all corrections incorporated, in accordance with the requirements of this specification and the manuscript schedule. Camera-ready copy is text, machine printouts, artwork, photographs, and all other manuscript material suitable for photographing or for preparing photo-offset printing plates. Delivery of the camera-ready copy is

Downloaded from http://www.everyspec.com

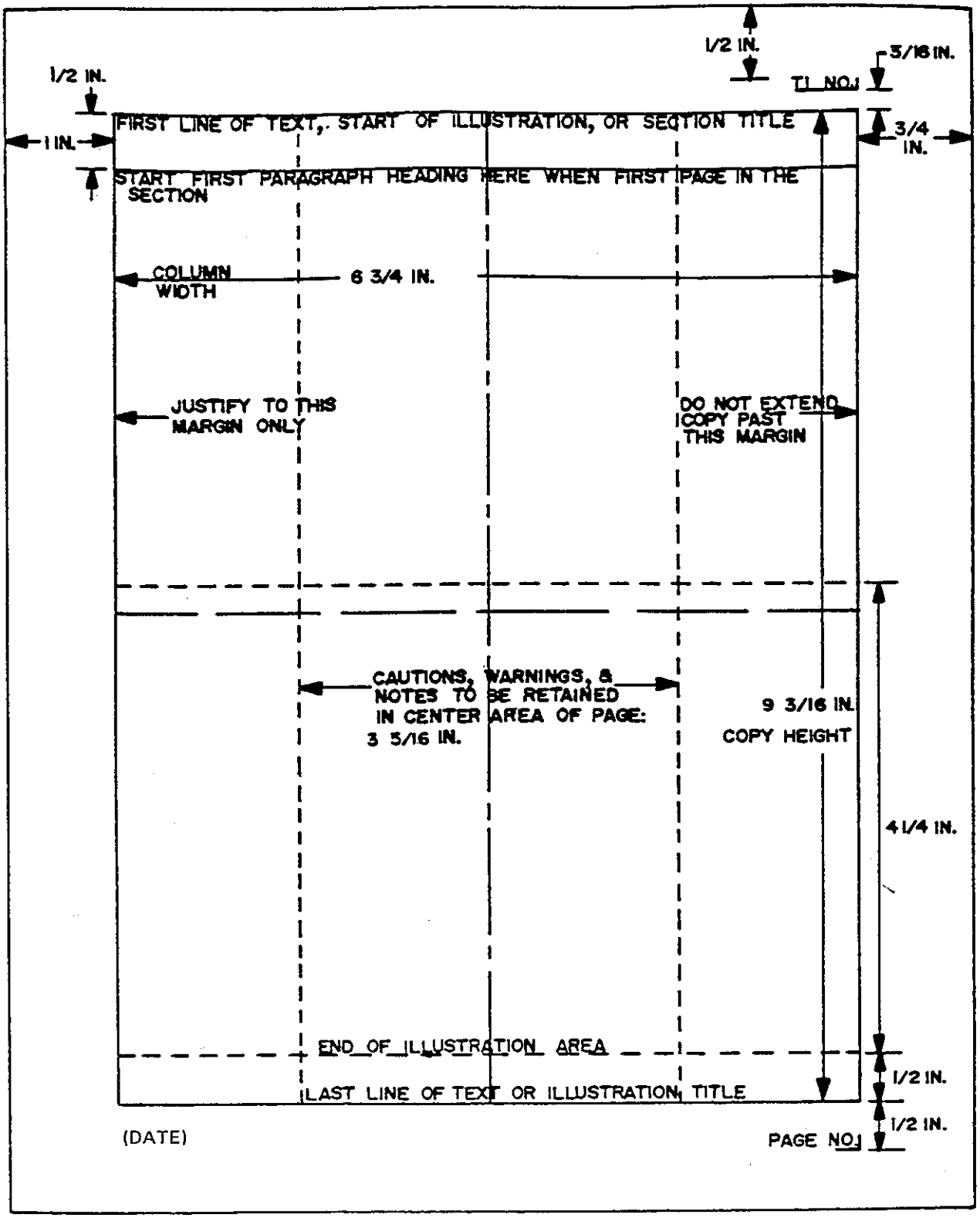

Figure 2. Right-Hand Page Format

Downloaded from http://www.everyspec.com

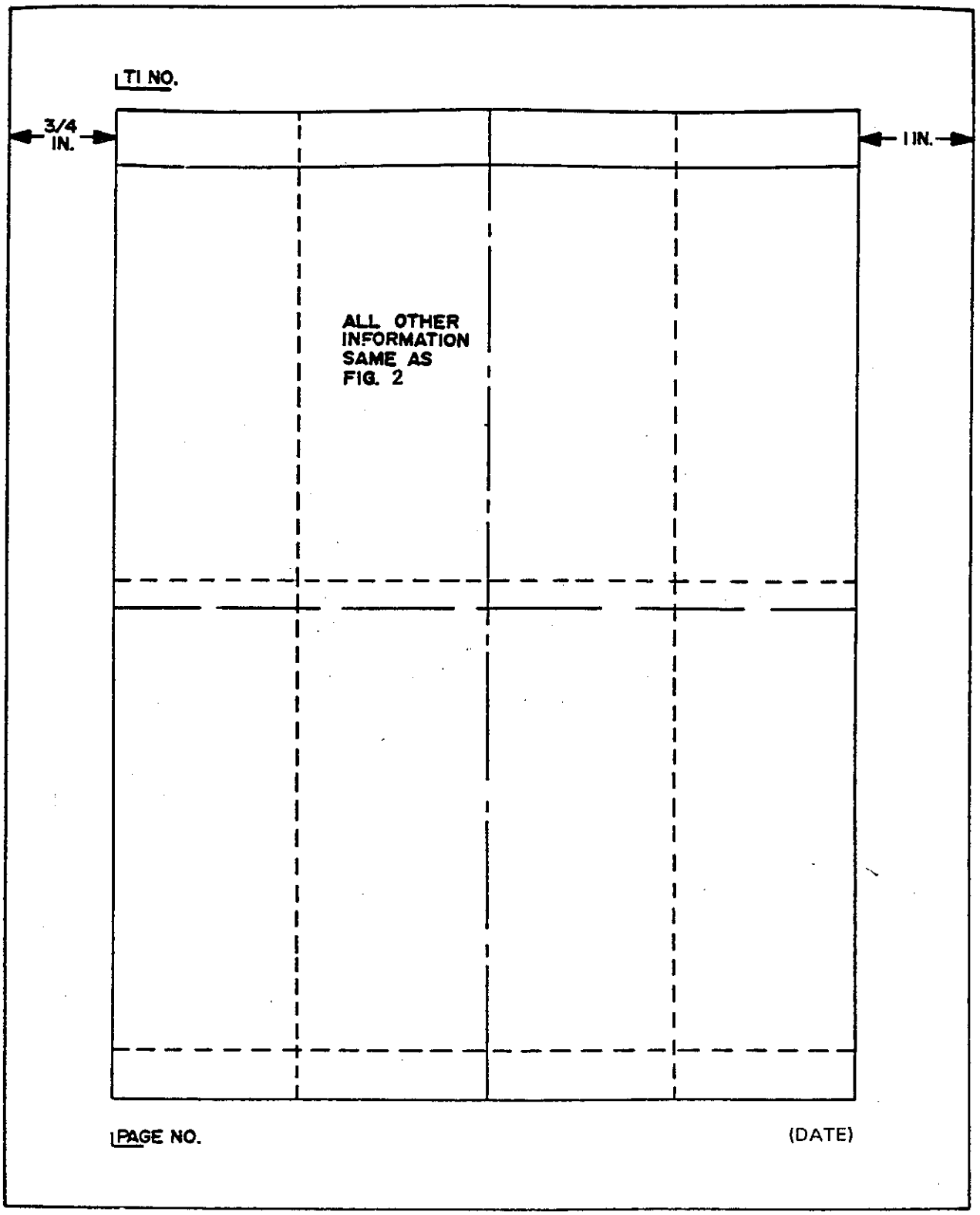

Figure 3. Left-Hand Page Format

Downloaded from http://www.everyspec.com

normally scheduled to provide printed instruction books with delivery of the first equipment. In those cases where the time from the delivery of the first equipment to the delivery of the last equipment is lengthy, the CO may, at his discretion, require the contractor to retain custody of the camera-ready copy and supply negatives instead. In this way, changes to the instruction book resulting from subsequent equipment changes can be expedited, and transit damage to the camera-ready copy can be avoided. Delivery of the camera-ready copy shall then coincide with delivery of the last equipment. All equipment deliveries shall be accompanied by updated instruction books.

3.3.2.1 Typing and format requirements for reproducible copy. - Typing and format requirements for the camera-ready copy are defined in the following subparagraphs. In addition, all requirements for draft copies listed in 3.3.1.2 shall apply to the preparation of camera-ready copy, with the following changes:

(a) Typing shall be single-spaced.

(b) All manuscript for the camera-ready copy shall be on one side of the paper only. If there is a requirement to deliver photocopies of the final manuscript, they shall be reproduced on both sides of the paper.

(c) Black carbon typewriter ribbons shall be used.

(d) No list of modifications to the specification is required.

3.3.2.1.1 Machine printouts. - If any material furnished by the con tractor is in the form of a machine printout, the quality of the printout shall be at least equal to the quality of an original reproducible typed text page. If this quality level cannot be achieved, the data shall be prepared by other methods. If reduction to achieve page size, either 8-1/2 by 11 inches or foldout, results in letter or numeral sizes smaller than 7-point, the material shall be prepared by other methods or, at the option of the Government, the material may be used full size, to be bound in a separate volume. Each page of the printout shall be mounted on a board, or at the option of the Government, the printout may be delivered intact.

3.3.2.1.2 Publication number. - Each instruction book shall be designated by a particular publication number (T.I.____). The CO will furnish the publication number to be used on the instruction book at the same time he formally approves the manuscript plan. The publication number shall be typed in the upper outside corner of each page and the front cover as shown in figures 2 and 3. Commercial publications included in the book shall have, as a minimum, the publication number placed in the upper right-hand corner of the front cover.

Downloaded from http://www.everyspec.com

3.3.2.1.3 Publication date. - The date of publication shall be typed at the lower inside corner of each page and at bottom center on the front cover.

3.3.2.2 Final artwork. - All artwork supplied with the camera-ready copy shall conform to the requirements listed in 3.6.20 of this specification. The following requirements also apply.

3.3.2.2.1 Original artwork used in preparation of illustrations. - Artwork generated in the preparation of illustrations shall be securely applied to a mounting board by a permanent method that will not distort or discolor the drawing or photograph. The mounted artwork shall be free of wrinkles and blisters. The board shall provide a minimum border of 1-1/2 inches on each side of the image area. The publications number, figure number, and page number shall appear in the lower right corner of the mounting board. See figure 4 for identification, marking, and cover for artwork. In those instances such as on photographs where acetate overlays are required, they shall be positioned in the sequence shown.

3.3.2.2.2 Overlays on artwork. - Overlays shall be hinged at the top of the mounting board with clear cellophane tape. At least three sets of register marks shall be provided on the artwork and on each overlay.

3.3.2.2.3 Covering of artwork. - All artwork shall be protected by an inner flap of tissue paper or vellum and an outer flap of heavy paper (similar to Kraft paper). The outer flap shall contain the publication number, figure number, and page number on the outside in the upper right corner. For complex instruction books, this identification shall include any additional breakdown such as volume and part numbers.

3.3.2.2.4 Troubleshooting support data format. - If troubleshooting support information (section 11) is bound as a separate volume, the cover and page size shall be 11 inches high by 17 inches wide. The front cover format and content shall be as in the sample shown in figure 5. Type sizes for the contents of the front cover shall be as specified in 3.6.1 except for "TROUBLESHOOTING SUPPORT DATA" (substituted for "INSTRUCTION BOOK") which shall be in 30-point type.

3.3.2.3 Suggested improvements form. - The contractor shall make a (camera-ready) reproducible copy of figure 6 and attach it to the equipment instruction book manuscript. This form shall be a part of every equipment instruction book manuscript prepared by equipment contractors and be in the order of a tear-out page to be used by FAA personnel for suggesting changes to the instruction book. When the contractor is required to deliver copies of the final manuscript, each of these copies shall have ten copies of the tear-out page inserted in the rear of the instruction book.

Downloaded from http://www.everyspec.com

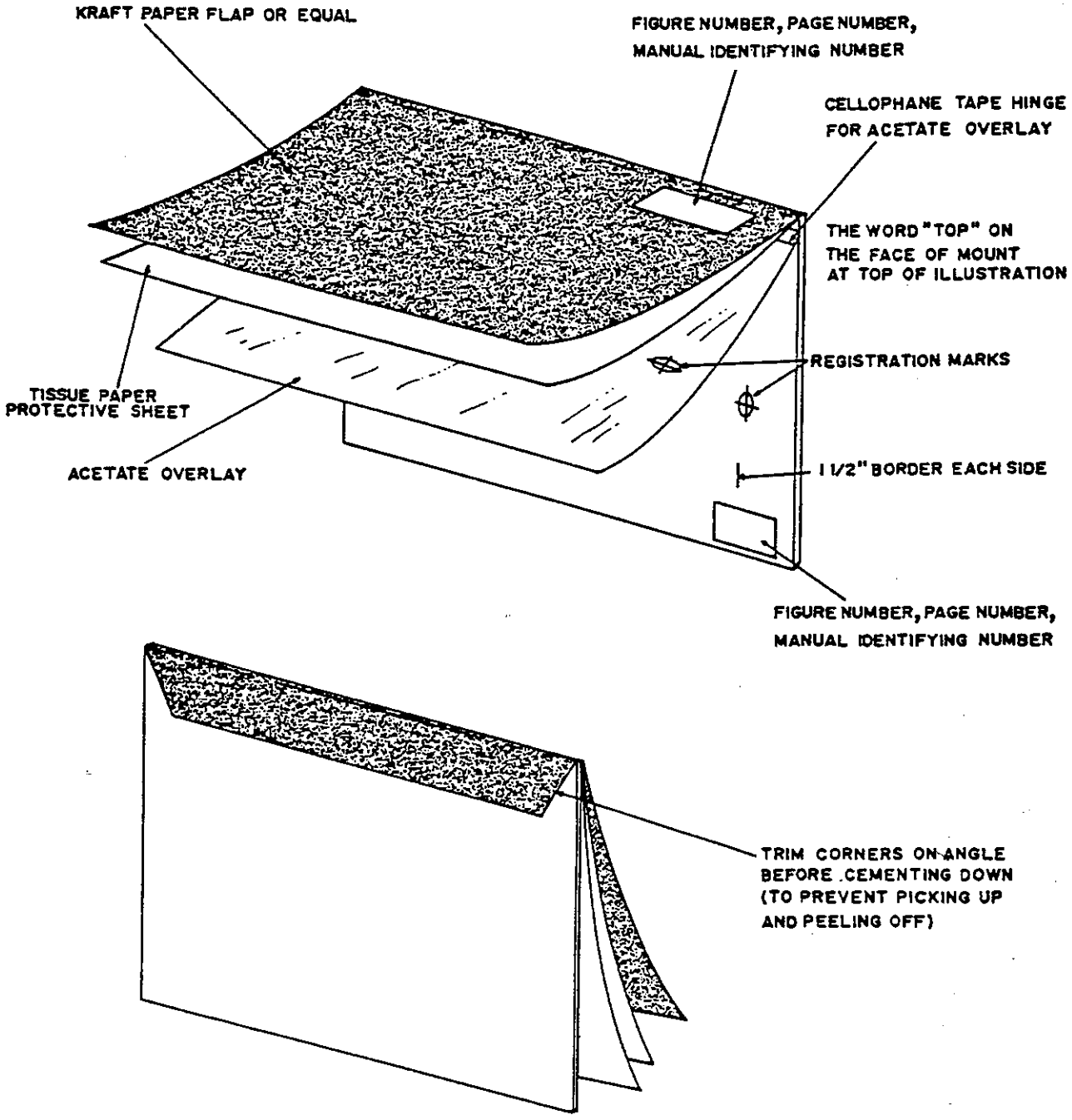

Figure 4. Identification, Marking, and Cover for Artwork

TI 6850.9

TROUBLESHOOTING SUPPORT DATA

MEDIUM INTENSITY APPROACH LIGHTING SYSTEM

WITH

RUNWAY ALIGNMENT INDICATOR LIGHTS (MALSR)

TYPE FA-8981 SEQUENCED FLASHER
SERIAL NOS. 1-576
TYPE FA-8982 CONTROL CABINET
SERIAL NOS. 1-72

SECTION 11 , VOLUME _____

CONTRACT FA73WA-3277

CONTRACTOR

ACEY ELECTRIC, INC.
50 BAYLOR STREET

KANAWHA, OHIO 44004

MADE FOR

U.S. DEPARTMENT OF TRANSPORTATION
FEDERAL AVIATION ADMINISTRATION
(DATE)

11 IN.

17 IN.

Figure 5. Typical Front Cover, Troubleshooting Support Data Volume

Downloaded from http://www.everyspec.com

Downloaded from http://www.everyspec.com

DATE:
SUBJECT:

FROM:
TO:

a. Present Problems—

b. Recommended Improvements—

Signature

FACILITY IDENTIFIER & ADDRESS

Figure 6. Suggested Improvements to Equipment Instruction Book

Downloaded from http://www.everyspec.com

3.4 Reference designations, symbols, and abbreviations. - Reference designations, symbols, and abbreviations used in instruction book manuscripts shall conform to the requirements of the following subparagraphs.

3.4.1 Reference designations. - Reference designations shall be in accordance with ANSI Y32.16, except that the following modifications shall apply:

(a) Section 2: Delete

(b) Paragraph 4.1.5.5: The third paragraph, line 5, change "if furnished, may" to "if furnished, shall."

(c) Paragraph 4.1.8: Delete text and substitute: "if a part serves a function other than the function for which it is designed, or a dual function, it shall nevertheless be represented on the schematic diagram by the graphic symbol and reference designation (latter chosen from Section 8) indicative of the physical characteristics of the part. Where space permits, the special function shall be noted on the diagram. In any case, it shall be described in the instruction book manuscript for the equipment."

(d) Subparagraph (3) under paragraph 7.1: Delete

(e) Section 9: Delete

3.4.2 Letter symbols for semiconductor devices. - Letter symbols for semiconductor devices shall be in accordance with IEEE Standard 255.

3.4.3 Letter symbols and mathematical signs. - Letter symbols and mathematical signs shall be in accordance with ANSI Y10.19.

3.4.4 Graphic symbols for circuit elements. - Diagrams shall utilize the graphic symbols for circuit elements (part and component devices) set forth in ANSI Y32.2 except that the additional provisions given herein shall take precedence. If ANSI Y32.2 shows more than one symbol for a circuit element, the symbol appropriate for electronic equipment diagrams rather than electrical diagrams shall be used. For example, in ANSI Y32.2, Item 4.5 Operating Coil shall be the rectangular coil symbol. Under items 4.3.1 to 4.3.3, 4.3.5 to 4.3.7, 4.25.3, and 4.30.2, the parallel line contact symbols shall not be used. Under items 11.2.7 and 11.2.7.1, the circular symbol for indicating lights shall not be used.

3.4.5 Mechanical diagram symbols. - Graphic symbols for mechanical parts of diagrams and line drawings shall be in accordance with MIL-STD-17B-1 or MIL-STD-17B-2, as applicable.

3.4.6 Flow chart symbols. - Flow chart symbols shall be in accordance with ANSI X3.5.

Downloaded from http://www.everyspec.com

3.4.7 Logic diagram symbols. - Graphic symbols on logic diagrams shall be in accordance with FAA-STD-010.

3.4.8 Designation for switch gear and industrial control devices. - Designations for switch gear and industrial control devices shall be in accordance with MIL-STD-27.

3.4.9 Special symbols. - Special symbols used on diagrams shall be explained as follows:

(a) Where the use of special symbols is limited, the symbols shall be defined on the diagram in which they appear.

(b) Where the use of special symbols is extensive, the symbols shall be defined in chart form on a separate page at the beginning of section 11, troubleshooting support data.

(c) Preexisting charts that define symbols other than those actually used in the manuscript shall not be used.

3.4.10 Acronyms and other abbreviations. - The use of acronyms and the use of abbreviations other than those commonly used for radio and electronic terms shall be kept to a minimum. Whenever possible, they shall conform to the standards listed in ANSI Y1.1. They shall be fully defined the first time used and shall be listed alphabetically and defined in a glossary. They shall not be used if they are not subsequently repeated in the text.

3.5 Security classification marking. - When the manuscript contains any classified data, security classification marking shall be in accordance with DOD Manual 5220.22-M, Industrial Security Manual for Safeguarding Classified Information.

3.6 Arrangement of manuscript contents. - The contents of the manuscript shall be arranged in the order presented in table I. The descriptive subparagraphs that follow contain all of the specific requirements not previously described in general requirements for the production of each part of the manuscript.

3.6.1 Front cover. - A typical front cover layout is shown in figure 7. Type style shall be a boldface upright design of the sizes listed in table II. Typing may be by any method that produces satisfactory camera-ready copy.

3.6.1.1 Front cover content. - All items shown in figure 7 shall be included on the cover. When the instruction book covers a single unit of equipment with more than one type designation, the serial number of each type shall be shown. When more than one unit of equipment is covered, each unit title shall be shown with type designations and serial numbers. When two or more identical units are made by the same contractor under two or more contracts, the serial numbers for each contract shall be tabulated.

Downloaded from http://www.everyspec.com

TABLE I. ARRANGEMENT OF CONTENTS

Requirement	Reference Paragraph
Front Cover	3.6.1
Contractor Guarantee 1/	3.6.2
List of Specification Modifications 2/	3.6.3
List of Effective Pages 1/	3.6.4
Content Assurance Page	3.6.5
Table of Contents	3.6.6
List of Illustrations	3.6.7
List of Tables	3.6.8
Family Tree Chart	3.6.9
Section 1, General Information and Requirements	3.6.10
Section 2, Technical Description	3.6.11
Section 3, Operation	3.6.12
Section 4, Standards and Tolerances	3.6.13
Section 5, Periodic Maintenance	3.6.14
Section 6, Maintenance Procedures	3.6.15
Section 7, Corrective Maintenance	3.6.16
Section 8, Parts List	3.6.17
Section 9, Installation, Integration, and Checkout	3.6.18
Section 10, Computer Software	3.6.19
Section 11, Troubleshooting Support Data	3.6.20

Notes: 1/ Not required for draft copies.
2/ Required only for draft copies.

Downloaded from http://www.everyspec.com

TI 6850.9

INSTRUCTION BOOK

MEDIUM INTENSITY APPROACH LIGHTING SYSTEM

WITH

RUNWAY ALIGNMENT INDICATOR LIGHTS (MALSR)

TYPE FA-8981 SEQUENCED FLASHER
SERIAL NOS. 1-576
TYPE FA-8982 CONTROL CABINET
SERIAL NOS. 1-72

SECTION _____, VOLUME _____

CONTRACT FA73WA-3277

CONTRACTOR

ACEY ELECTRIC, INC.
50 BAYLOR STREET
KANAWHA, OHIO 44004

MADE FOR

U.S. DEPARTMENT OF TRANSPORTATION
FEDERAL AVIATION ADMINISTRATION

(DATE)

Figure 7. Typical Front Cover

Downloaded from http://www.everyspec.com

3.6.1.2 Cover stock. - The covers of the camera-ready copy of the manuscript may be printed on the same paper used for the text. Covers for draft copies and for photocopies of the final manuscript shall be of heavier stock such as 57-pound vellum. The back cover shall be the same stock used for the front cover and shall be blank on both sides.

3.6.2 Contractor guarantee. - The contractual guarantee clause covering the equipment, components, accessories, etc., shall be typed on a separate sheet so that it may be reproduced on the inside of the front cover of the printed instruction book. The heading shall be the word GUARANTEE centered in the middle of the column. This requirement does not apply to draft copies circulated for in-process reviews.

TABLE II. TYPE SIZES FOR FRONT COVER

Item	Point Size
National Stock number	14
Publication number	14
"INSTRUCTION BOOK"	18
Equipment title	30
"TYPE" and type number	18
"SERIAL NOS." and serial number	18
"U.S. DEPARTMENT OF TRANSPORTATION"	18
"FEDERAL AVIATION ADMINISTRATION"	14
All other printing	12

3.6.3 List of modifications to specifications. - Draft copies of the manuscript circulated for in-process review shall contain a list of all modifications granted to this specification. The list shall appear on the page immediately following the front cover and shall fully identify the requirements waived.

3.6.4 List of effective pages. - The camera-ready manuscript shall contain a list of effective pages immediately following the front cover. Whenever replacement pages are issued for the instruction book, they shall be accompanied by a revised list of effective pages. This list shall reflect the current changes in addition to the tabulation of all previous changes, thus providing a complete history of the instruction book.

3.6.5 Content assurance page. - A content assurance page shall be provided with each instruction book manuscript. The page shall be located immediately following the list of specification modifications in draft manuscripts or the list of effective pages in the camera-ready copy. The content assurance page format shall be as shown in figure 8. All sections and spaces on the form shall be completed. The CO shall initial those entries that were verified by him or his representative concurrent with contractor validation. Simultaneous

Downloaded from http://www.everyspec.com

VALIDATION PERFORMANCE

TITLE OF DOCUMENT:

CONTRACTOR:

SUBCONTRACTOR:
(If performing validation)

APPLICABLE CONTRACT AND PURCHASE ORDER NUMBERS:

PARAGRAPH AND SUBPARAGRAPH NUMBERS (When applicable, list inclusive paragraphs; e.g., 4.21 thru 4.21.6)	DATE OF VALIDATION COMPLETION	CHECK BELOW IF NOT VALIDATED		C.O. VERIFICATION
			AUTHORITY	

VALIDATING OFFICER (CONTRACTOR)

SIGNATURE OF VALIDATING OFFICER

CONTRACTING OFFICER (FAA)

SIGNATURE OF CONTRACTING OFFICER

Figure 8. Content Assurance Page

Downloaded from http://www.everyspec.com

validation and verification are mandatory for sections 2 through 7 of the instruction book. Entries not verified shall be marked N/A.

3.6.6 Table of contents. - A comprehensive table of contents starting on a right-hand page shall be provided listing numbers and titles of sections and principal paragraphs with their initial page numbers. The security classification, if any, of appropriate titles shall be indicated. In multivolume manuscripts, volume 1 shall contain a complete table listing the contents of all volumes; other volumes shall contain a table listing only the contents of the volume in which the list appears.

3.6.7 List of illustrations. - Manuscripts shall contain a list of illustrations immediately following the table of contents. The list shall include the number, title, security classification (if any), and initial page number where the illustration is located in the manuscript. In multivolume manuscripts, volume 1 shall contain a complete listing; other volumes shall contain only their own listing.

3.6.8 List of tables. - Manuscripts shall have a list of tables immediately following the list of illustrations. The list shall include the number, title, security classification (if any), and page number where the table is located in the manuscript. In multivolume manuscripts, volume 1 shall contain a complete listing; other volumes shall contain only their own listing.

3.6.9 Family tree chart. - A chart of the equipment depicting the relationship of the units, assemblies, and subassemblies to each other shall be provided as shown in figure 9. Reference designations and assigned nomenclatures shall be used and shall be in accordance with ANSI Y32.16.

Downloaded from http://www.everyspec.com

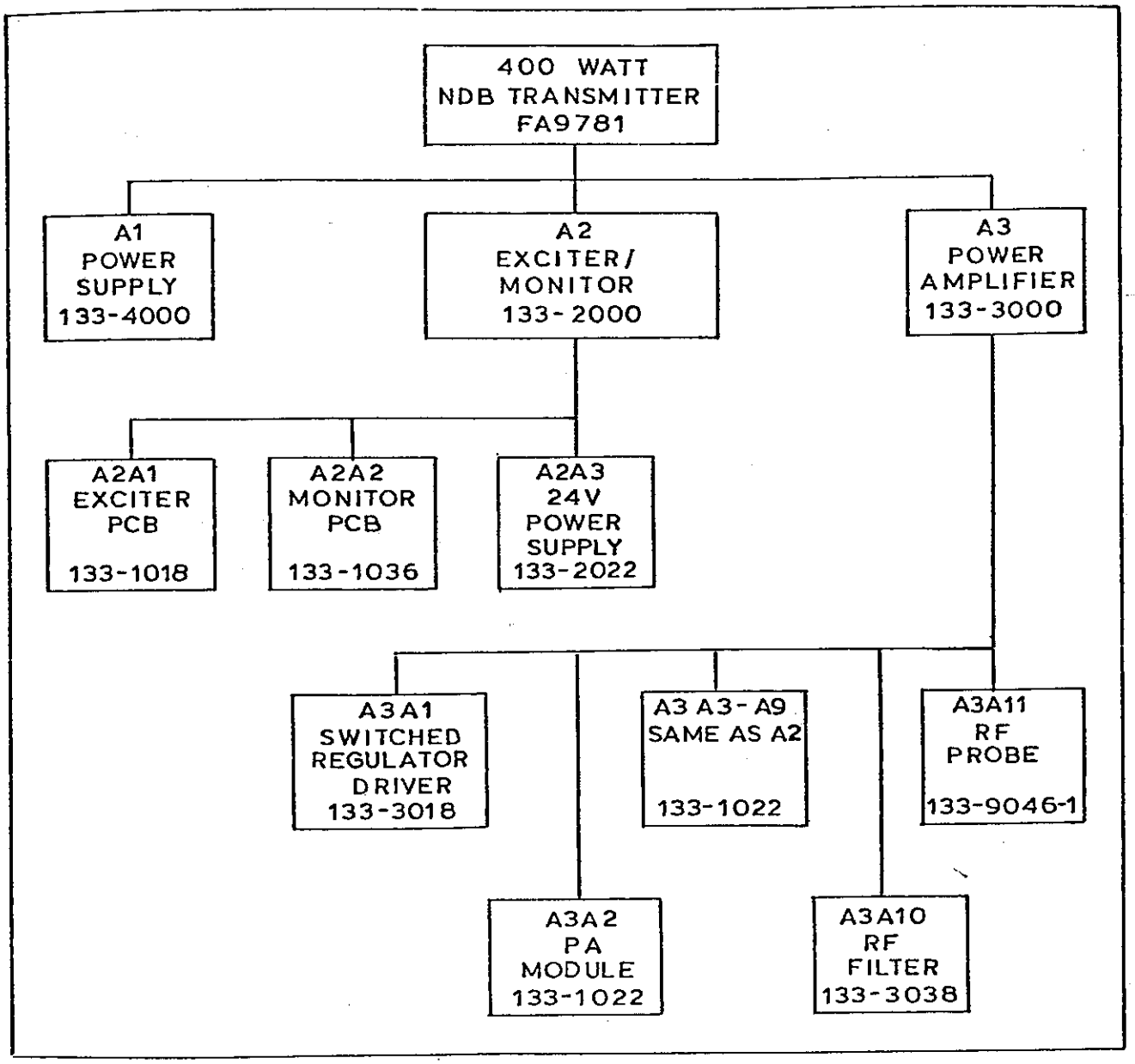

Figure 9. Family Tree Chart

Downloaded from http://www.everyspec.com

3.6.10 Section 1 of instruction book, General information and requirements. - The content of this section shall provide management, supervisory personnel, and other users having a general interest in the equipment with a rapid reference source for determining the purpose, physical and functional characteristics, operational capabilities, and limitations of the equipment. Detailed technical explanations shall not be used in this section. Text material shall be augmented with suitable listings, tables, photographs, and illustrations appropriate for the equipment covered. The principal characteristics of each, including physical, electrical, mechanical, functional, software, and performance characteristics, shall be shown in summary form.

3.6.10.1 Introduction. - The introduction shall provide an explanation of the purpose, scope, and applicability of the instruction book. When applicable, this paragraph shall specify the models, serial numbers, and configurations covered.

3.6.10.2 Equipment description. - The equipment description shall explain the intended use (why, when, where, how, and with what), capabilities, and limitations of the equipment, including all external hardware and electrical interface characteristics associated with the FAA use of the equipment or system covered. All units of the equipment shall be clearly illustrated and identified. If the manuscript covers more than one equipment or model or configuration, a table defining the differences shall be included and entitled "Model Differences." This table shall be included in this section and shall list the various models by model number and tabulate the differences in ratings, voltage, etc.

3.6.10.3 Relationship of units. - Illustrations representing all major assembly units of the equipment shall be included. These illustrations shall be full-page photographs or outline drawings depicting in detail the relative size of each major assembly making up the complete equipment covered by the instruction book and indicating their relative placement and functional relationship. Each assembly shall be identified by name, using arrows where necessary. Each major assembly shall be assigned an identifying number. Each photograph or outline drawing shall be accompanied by a list of major assemblies shown with their identification numbers properly cross-referenced to the appropriate section in which detailed descriptive data is provided. The illustrations shall depict the hardware levels of containment, the basic interconnections between units, and their relationship with other equipment. See figure 10 for example.

3.6.10.4 Equipment specification data. - A table shall be provided to describe reference data pertinent to the equipment. Data shall be listed only for the equipment described in the manuscript and shall meet the requirements listed in the following subparagraphs. Do not include data for the overall system of which the equipment is a part.

Downloaded from http://www.everyspec.com

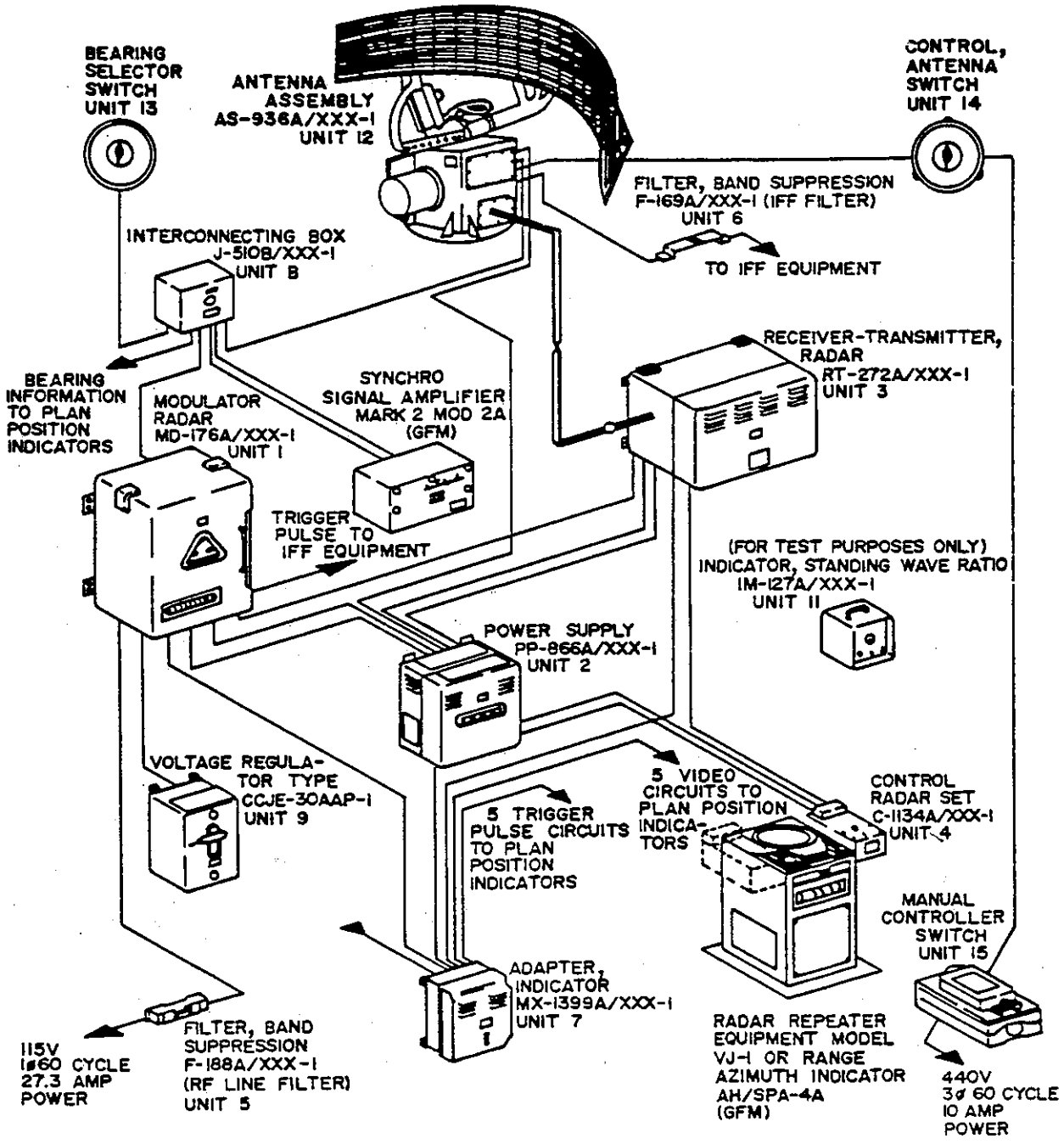

Figure 10. Relationship of Units

Downloaded from http://www.everyspec.com

3.6.10.4.1 Nameplate data. - Nameplate data shall include the name of the equipment manufacturer, type, model, and FAA number, as applicable.

3.6.10.4.2 Functional characteristics. - Functional characteristics such as power, flow, horsepower, pressure, capacity, modes of operation, signal output, frequency, pulse characteristics, sensitivity, selectivity, range, resolution, response, accuracy, drift modulation, and related items shall be listed. Overall dimensions of the equipment shall be included. Information for internal combustion engines shall include cycle, brake horsepower, bore, stroke, number of cylinders, revolutions per minute, and cooling type and capacity.

3.6.10.4.3 External power requirements. - External power requirements shall be specified and shall include voltage input, wattage, amperage, frequency, and power factor.

3.6.10.4.4 Rated output. - Rated outputs such as watts, volts, horsepower, amperes, etc., shall be included as appropriate. When fluid and pressure lines are involved, output shall be described in terms of gallons per minutes, feet per second, or other appropriate flow rates.

3.6.10.4.5 Environmental characteristics. - Environmental characteristics that may affect operation or accuracy of the equipment shall be described. The description shall include appropriate ambient temperatures, heat dissipation per unit, humidity limits, effect of ice buildup, radio frequency considerations, and other environmental considerations.

3.6.10.5 Equipment and accessories supplied. - A tabular listing of all major equipment supplied shall be included. The list shall include all equipment, equipment units, accessories such as special tools and test equipment, Government-furnished equipment, and other items which form a part of or are supplied with the equipment. The following is a guide to the required five-column format:

QUANTITY	NOMENCLATURE	FAA NUMBER	DIMENSIONS	WEIGHT AND VOLUME
(Quantity of each item supplied)	(Official nomenclature of each item supplied)	(Component or unit number of each item supplied)	(Crated and uncrated dimensions in metric and American units of each item supplied)	(Crated and uncrated weight and volume in metric and American units of each item supplied)

3.6.10.6 Equipment required but not supplied. - A tabular listing of unsupplied equipment required to make the equipment operative shall be provided. The listing shall be in the same format specified in 3.6.10.5 for equipment supplied.

Downloaded from http://www.everyspec.com

3.6.11 Section 2 of instruction book, technical description. - This section shall provide a complete description of the technical details of the equipment. The description shall be presented functionally and shall be terse, technically complete, and accurate. The description shall be adequate to support a maintenance technician in his maintenance task, provide support for formal training courses on the equipment, provide support and text material for on-the-job training, and provide adequate technical data for the operator to self-train. Detailed theory of operation shall be to a depth sufficient for use by engineering personnel in the resolution of difficult problems or in the design and implementation of future modifications. The technical description shall include the use of appropriate tables, photographs, diagrams, drawings, etc. Functional flow diagrams (figure 11-foldout) shall be provided to show the order of events in circuits that have time-state dependent functions. Signal flow diagrams (figure 12-foldout) shall be provided to show complicated signal flows that are dependent on other signal functions. Illustrations so used shall be referenced in the text prior to their inclusion in the manuscript. When contractor's commercial publications are provided as part of the instruction book, they shall contain information applicable only to parts and accessories furnished on the particular contract involved. Overprinting such as lining out to cancel nonapplicable portions of commercial publications shall not be acceptable.

3.6.11.1 Simplified theory of operation. - The simplified theory of operation shall consist of a description of equipment operation at unit levels. The text shall reference and be supported by block diagrams constructed according to the requirements listed in 3.6.20. Both the text and the block diagrams shall address the operation from a replaceable-unit approach whenever possible. All inputs and outputs (including power), within and entering or leaving the block diagram, shall be shown and discussed. Plugs, jacks, and other terminations shall be identified. Test points, controls, and indicators associated with the operation shall also be shown and discussed. Theory shall be presented at a level suit-able for the following:

(a) For use in training. This may be in the form of introductory classroom training or as an instrument for self-training.

(b) For use by the site maintenance technician who is concerned about replacement only to a unit level.

3.6.11.2 Detailed theory of operation. - The detailed theory of operation shall consist of a complete description of the circuits of the equipment and their operation. The text shall reference and be supported by detailed schematic diagrams constructed according to the requirements listed in 3.6.20. In addition, other diagrams, drawings, and photographs described in the following subparagraphs shall be included where their use contributes to a complete understanding of the equipment. The depth of the technicaldiscussion shall be such that it provides the information for engineering personnel to resolve highly technical problems in the equipment through repair or modification.

Downloaded from http://www.everyspec.com

3.6.11.2.1 Equivalent circuits. - Equivalent circuits may be used to support text describing unique circuits having complex interrelation of circuit elements. These drawings shall be restricted to a size that permits their integration within the text.

3.6.11.2.2 Timing diagrams. - Timing diagrams shall be provided to show important timing relationships for clocked circuitry. Where size permits, a timing diagram shall be integrated within the text; otherwise, it shall appear on a separate sheet in section 11 of the instruction book immediately preceding the schematic diagram to which it applies.

3.6.11.2.3 Logic circuits. - Logic principles shall be described fully. The description shall begin with an introduction to the basic digital symbology used. Logic polarity shall be indicated. Each logic function shall be described and supported by appropriate combinations of truth tables, Boolean equations, and text. Logic symbology shall conform to FAA-STD-010. Digital logic circuits shall be supported with appropriate logic circuit diagrams, integrated circuit logic diagrams and data charts, machine logic diagrams, and intermediate logic diagrams. These are defined as follows:

(a) Logic circuit diagrams (figure 13) are hardware-oriented diagrams. They shall be presented as a one-to-one relationship between logic blocks or components on the diagram and physical components in the system.

(b) Integrated circuit logic diagrams (figure 14) shall show the logical function performed by the integrated circuit and shall relate the function of the physical terminals.

(c) Integrated circuit data charts (figure 15-foldout) shall be provided for all integrated circuits contained in the equipment. Preexisting charts that define circuits other than those used in the equipment shall not be used.

(d) Machine logic diagrams (figure 16) of the complete machine shall be provided showing the most detail possible. Input and output lines and important points in the machine logic shall be annotated with action verb-noun statements describing the functions that determine the state of the lines or points.

(e) Intermediate logic diagrams (figure 17 - foldout) shall be provided to show the intended logical function of the hardware. The logic shall be reduced to the simplest form, showing the logical relationship between the functional building blocks of the systems. These diagrams shall be well annotated and related to machine logic.

Downloaded from http://www.everyspec.com

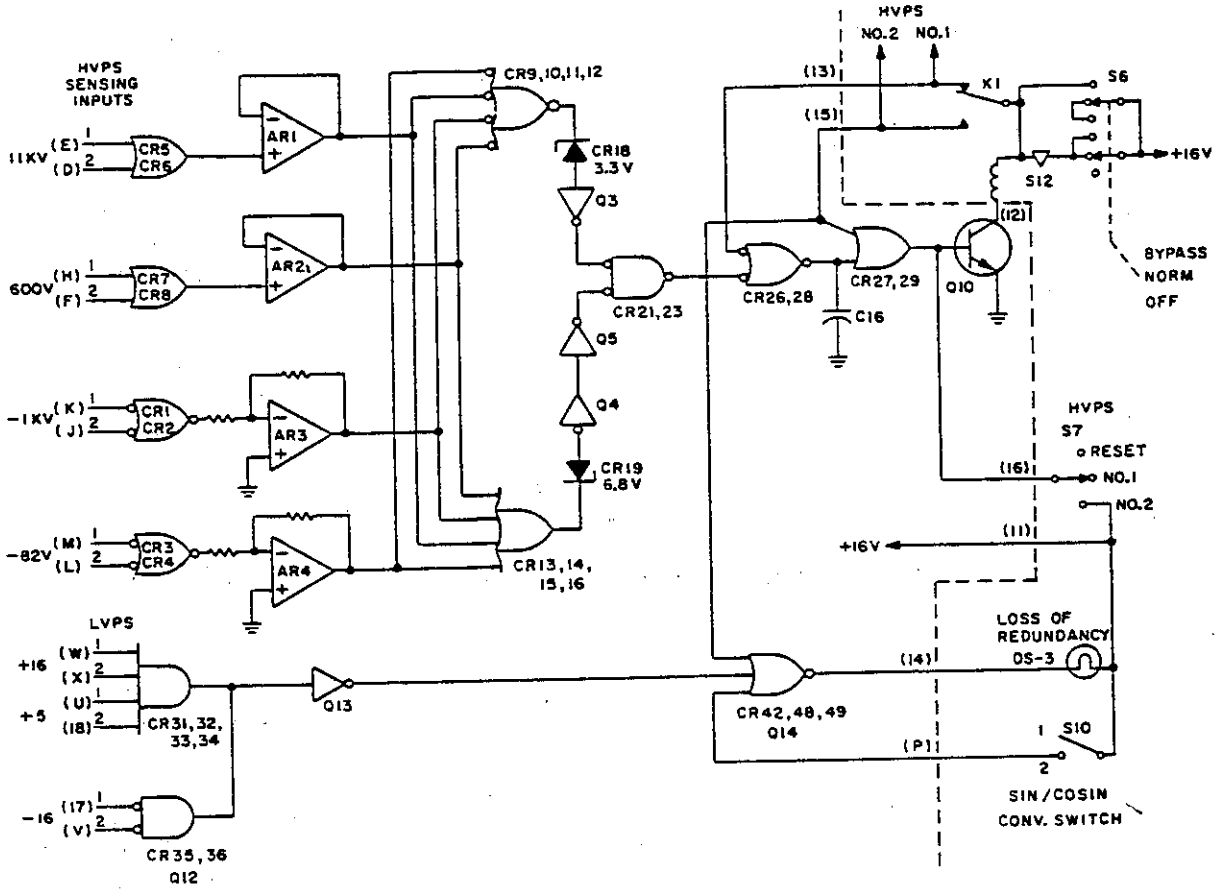

Figure 13. Logic Circuit Diagram

Downloaded from http://www.everyspec.com

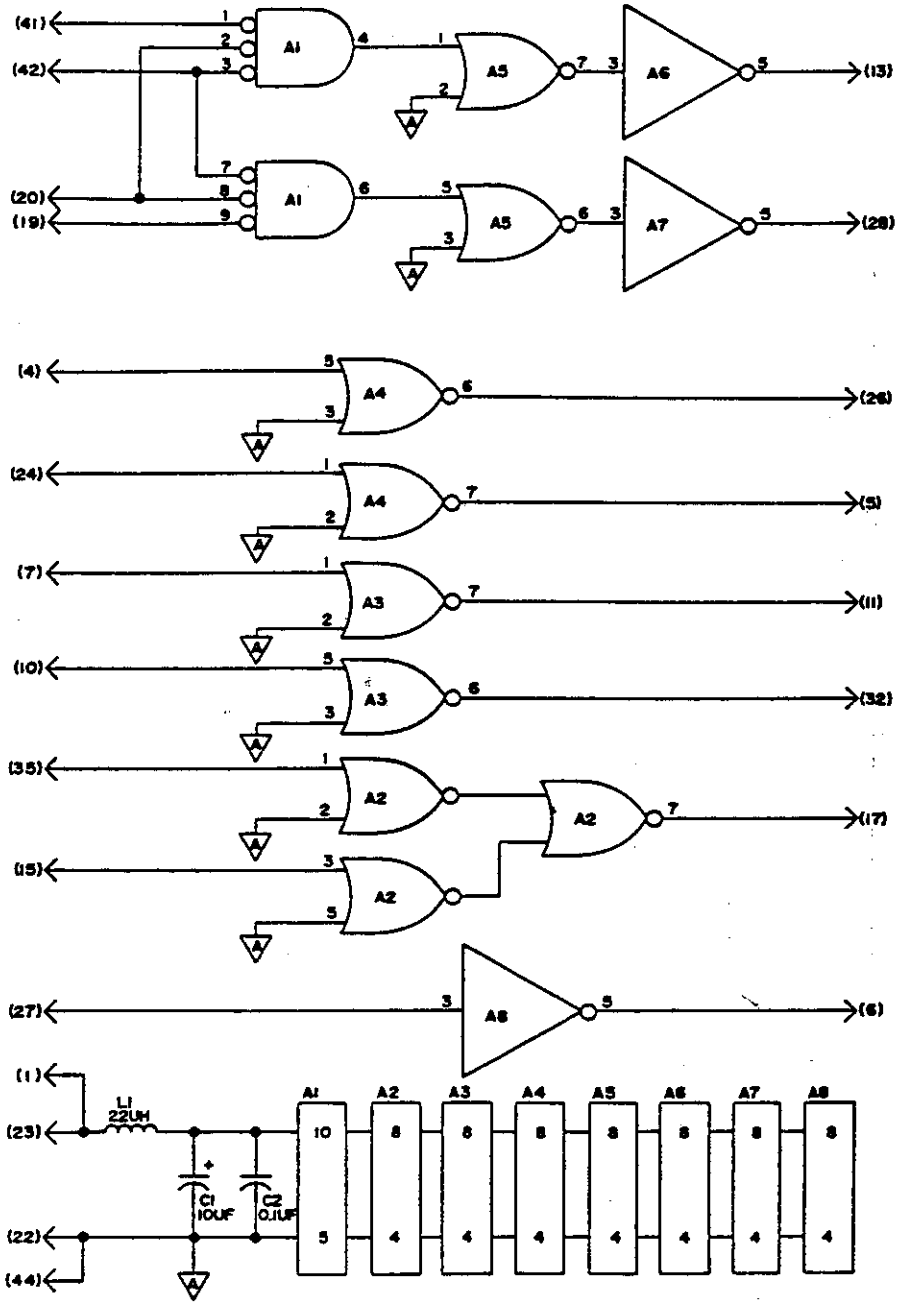

Figure 14. Integrated Circuit Logic Diagrams

Downloaded from http://www.everyspec.com

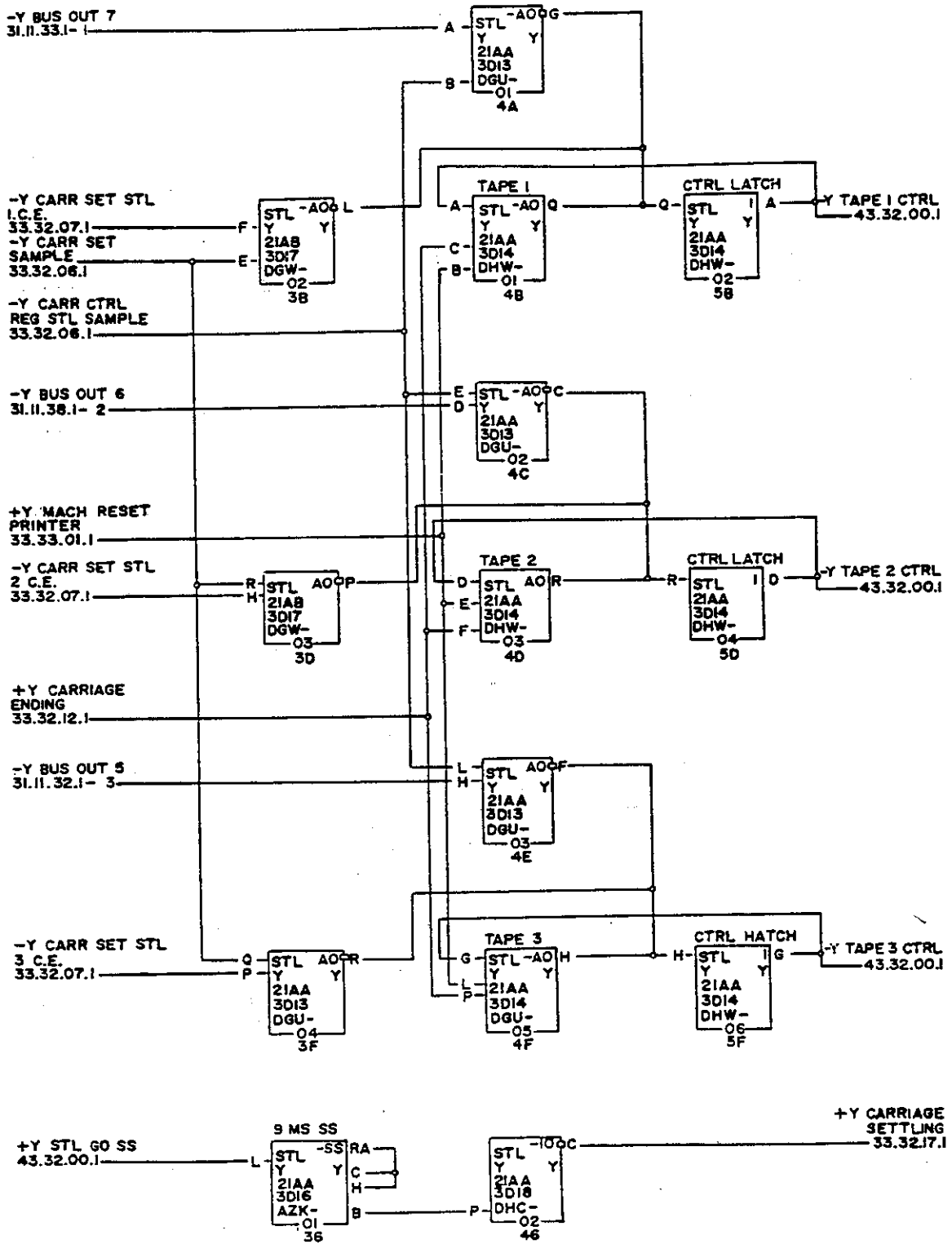

Figure 16. Machine Logic Diagram

Downloaded from http://www.everyspec.com

3.6.11.2.4 Mechanical functions. - Mechanical functions shall be fully described in the text and referenced to mechanical drawings constructed according to the requirements listed in 3.6.20 of this specification. Where size permits, the drawings shall be integrated within the text; otherwise, they shall appear in section 11 of the instruction book.

3.6.12 Section 3 of instruction book, operation. - This section shall contain the procedures necessary to place the equipment into proper operation. The introduction shall provide an overview of the in-service operation of the equipment, describing such features as operational modes, automated operation, and capabilities for local and remote monitoring and control. Under current concepts, sustained equipment operation will, for the most part, be monitored and controlled remotely and by automated equipment where possible. Some direct manual operations, however, will always be required, though they may be confined solely to the turn-on and shutdown of the equipment. This section of the instruction book shall, therefore, be presented to satisfy both of these requirements.

3.6.12.1 Controls and indicators. - A description of all operator controls, indicators, protective devices, and jacks shall be provided. The description shall include all panel designations marked on the equipment, all controls and indicators, and the function of each. The text shall be supported by detailed illustrations, including photographs and line drawings which identify and locate all operator controls and indicators. Where possible, a drawing and table format such as that shown in figure 18 shall be used.

3.6.12.2 Turn-on and checkout. - A description of all procedures required for an operator to turn on the equipment and verify proper operation shall be provided. If the equipment contains provisions for standby or for more than one operational mode, procedures shall be provided for each. Required tests and adjustments shall be included. They shall be listed step by step if peculiar only to initial checkout. If a part of regular maintenance procedures, they may be referenced to section 6 of the instruction book. A tabular format as shown in figure 19 shall be used wherever possible.

3.6.12.3 Remote monitoring and control. - Unattended operation of the equipment shall be discussed in detail. The methods used for automated remote monitoring and control of the equipment shall be addressed. This shall include a discussion of alarms, indicators, equipment switching, shutdowns, and communication between the operator and the monitor equipment. Step-by-step procedures for operator intervention shall be provided (in tabular format where possible).

3.6.12.4 Equipment shutdown. - This procedure shall include the steps necessary to bring the equipment from the fully operational condition to the fully off condition. The procedure shall include any waiting periods in the shutdown procedure necessary for pressure to vent, fluid to drain, etc.

Downloaded from http://www.everyspec.com

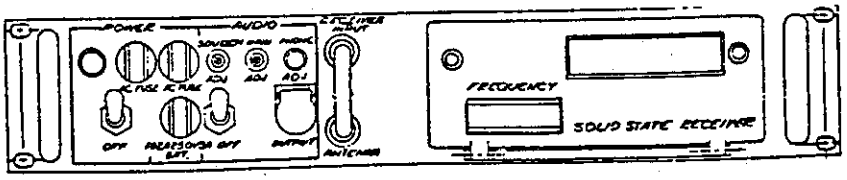

Control or Indicator	Ref Des	Function
POWER		
ON-OFF Toggle switch	S2	When placed in ON position provides primary input power to receiver.
Indicator lamp	DS1	Illuminates when POWER ON-OFF switch is in the ON position.
FUSES		
AC FUSE (left)	F1	Single 1-ampere fuse in 105 to 120 Vac line. Indicating fuse holder glows when fuse is blown.
AC FUSE (right)	F2	Two 0.5-ampere fuses used for 210 to 240 V ac operation. Indicating fuse holder glows when fuse is blown.
BATTERY FUSE	F3	Single 3-ampere fuse in positive side of battery input. Indicating fuse holder glows when fuse is blown.
AUDIO		
SQUELCH ADJ Screwdriver adjust	R1	Sets squelch threshold level.
SQUELCH ON-OFF Toggle switch	S1	When ON-OFF switch is in ON position squelch is operative. With switch in OFF position squelch is disabled.
MAIN ADJ Screwdriver adjust	R2	Adjusts level of audio output at rear panel connector.

Figure 18. Controls and Indicators Presentation

Downloaded from http://www.everyspec.com

TURN-ON AND CHECKOUT			
LOCATION	ITEM	ACTION	INDICATION-REMARKS
1. Control panel	Master switch	ON	30 sec. delay, then STANDBY indicator lights.
2. Control panel	Operate switch	ON	OPERATE indicator lights.
3. Transmitter	Frequency meter	Read	Verify transmitter is operating at assigned frequency. If not, adjust per 6.2.1.
4. Transmitter	Power meter	Read	Verify power output is 300 to 400 watts. If not, refer to 6.2.2.
5. Monitor	Transmitted signal meter	Read	Meter deflection indicates free-space transmission of signal from antenna. If not, refer to 6.3.1.

Figure 19. Sample Turn-on and Checkout Tabular Format

Downloaded from http://www.everyspec.com

3.6.13 Section 4 of instruction book, standards and tolerances. - This section shall provide tabular listings (as shown in figure 20) of equipment parameters, their standards, and their tolerances. Only parameters for the specific equipment addressed in the instruction book shall be listed. The requirements for each entry are discussed in the subparagraphs that follow. A brief, introductory paragraph shall precede the table and shall explain its use.

3.6.13.1 Parameter. - This entry shall list the parameter by title and shall be assigned an identifying letter to be used in cross-referencing from other sections of the instruction book. An arrow (→) shall precede the letter when the parameter is critical; i.e., operation of equipment is adversely affected when the tolerance is exceeded.

3.6.13.2 Procedure paragraph reference. - This column shall, for each parameter, list the paragraph in section 6 of the instruction book that describes the procedures used to establish the value of the parameter.

3.6.13.3 Standard. - This shall be the optimum value of the parameter and shall be compatible with the design capability of the equipment.

3.6.13.4 Initial tolerance limit. - This shall be the maximum deviation, above, and below the standard value, that is permissible when the equipment is initially commissioned or subsequent to any modification. Absolute figures shall be used. Plus and minus entries (e.g., ± 5 volts) shall not be used.

3.6.13.5 Operating tolerance limit. - This shall be the maximum deviation, above and below the standard value, over which the equipment may continue to operate without adjustment or corrective maintenance, and beyond which remedial action is required. As for initial-tolerance entries, plus and minus figures are not acceptable.

3.6.13.6 Interconnecting cables and circuits. - Where signals are transmitted from one part of the equipment to another over external cables or circuits not supplied by the contractor (Telco lines, Microwave Link), standards and tolerances relating to signal levels and bandpass at the input to the external circuits shall be specified for the range over which contractor-supplied equipment will function properly.

3.6.13.7 Remote monitor and alarms. - Threshold levels for triggering monitor and alarm equipment shall be listed. The levels shall be such that alarms are activated before the operating tolerance of any critical parameter of the equipment is exceeded.

Downloaded from http://www.everyspec.com

Table 4-1. Standards and Tolerances

Parameter	Procedure Reference Paragraph	Standard	Tolerance Limit	
			Initial	Operating
a. Carrier Power Output	6.1.5	As established for coverage	Same as standard but not exceeding rated output of transmitter	Within 10% of standard
b. Carrier Frequency	6.1.6			
(1) Conventional		75.000MHz	Within 0.003% (2250Hz) of standard	Within 0.005% (3750Hz) of standard
(2) Offset frequency operation		75.004MHz 74.996MHz	Within 0.002% (1500Hz) of standard	Within 0.002% (1500Hz) of standard
c. Modulation Level	6.1.8			
(1) ILS		95%	93% to 97%	91% to 99%
(2) Others		97.5%	96% to 99%	95% to 100%
d. Modulation Frequency	6.1.3			
(1) ILS outer marker		400Hz	399Hz to 401Hz	396Hz to 404Hz
(2) ILS middle marker		1300Hz	1297Hz to 1303Hz	1287Hz to 1313Hz
(3) Others		3000Hz	2992Hz to 3008Hz	2970Hz to 3030Hz
e. Monitor Alarms	6.1.10			
(1) Carrier Power Reduction		Alarm with 50% reduction	As established but not exceeding standard	< 50% reduction
(2) Modulation		Alarm with loss of tone or keying	Same as standard	Same as standard
f. Automatic Transfer Shutdown	6.1.2	Appropriate action and indications for any monitor alarm	Same as standard	Same as standard

Figure 20. Example of Standards and Tolerances Table

Downloaded from http://www.everyspec.com

3.6.14 Section 5 of instruction book, periodic maintenance. - This section shall contain performance checks and other preventive maintenance tasks that must be performed on a recurring basis to ensure optimum equipment operation. This includes activities to be performed at irregular intervals as well as those to be performed on a fixed schedule. Procedures shall be such that their performance requires minimum interruption to normal equipment operation. Performance intervals shall not be specified; this information is reserved for maintenance handbooks. The contractor shall, however, provide a separate listing of expected or recommended performance intervals.

3.6.14.1 Tabular presentation. - Performance checks and other maintenance tasks shall be listed in a tabular format as shown in figure 21. Separate tables shall be provided for each category described in the following subparagraphs. The format shall be the same for all; only the table name and the category shall change. All entries shall contain appropriate references to section 4 for the required results and to section 6 for the procedures used to obtain those results.

3.6.14.2 Performance checks. - The use of remote monitoring equipment minimizes the need for periodic equipment performance checks. However, the design and use of some equipment can impose the requirement for periodic checks. This part shall list such checks. In addition, performance checks are required for the following:

(a) After initial installation or subsequent modification of the equipment.

(b) After completion of any corrective maintenance.

(c) After the return to service of any unit removed for repair or calibration.

3.6.14.3 Other onsite maintenance. - This part shall list all onsite tasks, other than those listed under performance checks, that are necessary to prevent deterioration of equipment and ensure its reliable operation. These tasks include cleaning, lubrication, adjustments, oil changes, and periodic alignment or calibration that does not require equipment removal from the site. Adjustments to compensate for equipment malfunctions are not permitted; corrective maintenance is required.

3.6.14.4 Offsite maintenance. - This part shall list tasks of a periodic nature that cannot be performed on site and require removal to a central repair facility. These tasks shall include scheduled overhauls and calibrations.

Downloaded from http://www.everyspec.com

TABLE 5-2. PERFORMANCE CHECKS

Performance Check (use different activity as required)	Reference Paragraph or Table	
	Standards and Tolerances	Maintenance Procedures
Transmitter - Measure and verify acceptable limits of the following:		
a. Power output	Table 4-1.c	6.2.1
b. Modulation	Table 4-1.d	6.2.2
Receiver - Measure and verify acceptable limits of the following:		
a. Sensitivity	Table 4-2.a	6.3.1
b. Bandwidth	Table 4-2.b	6.3.2

Figure 21. Section 5 Tabular Format

Downloaded from http://www.everyspec.com

3.6.15 Section 6 of instruction book, maintenance procedures. - This section shall consist of procedures required for accomplishing the various maintenance activities, both periodic and random, and any associated safety precautions. This section shall be divided into three parts; namely, performance check procedures, other maintenance tasks procedures, and special maintenance procedures.

3.6.15.1 Content. - The various parts shall contain the procedures for measuring, adjusting, aligning, calibrating, and repairing. For remote monitoring and control equipment, step-by-step procedures for operator interfacing shall be included. Procedures pertaining only to certain models and configurations of equipment shall be identified and associated with the appropriate units. Necessary tools, materials, and test equipment (including setup) shall be identified. A performance standard shall be provided for each procedure, either directly within the text or referenced to section 4. If the results of a procedure could indicate corrective action is required, a reference to a specific procedure in section 7 shall be given.

3.6.15.2 Format. - Prior to explaining any maintenance procedure, any other maintenance task that is a prerequisite shall be identified. Each procedure shall begin with a brief description of its purpose, followed by a listing of required tools, materials, and test equipment setup, and then a step-by-step procedure. The procedure may be presented in chart or table form or as a listing of steps. Complexity of equipment and length of procedures will strongly influence the selection of the most appropriate method of presentation. Regardless of the method selected, each step shall identify the following:

(a) Location of item.
(b) Item to be acted upon.
(c) Action to be taken upon the item.
(d) Results or relevant remarks such as performance standard, indicated corrective action, etc.

3.6.15.3 Performance check procedures. - This part shall contain procedures or methods for making the performance checks listed in section 5.

3.6.15.4 Other maintenance procedures. - This part shall contain the procedures or methods for doing the other maintenance tasks listed in section 5. Where the procedure requires replacement of a complete unit, detailed instructions for its removal and replacement shall be included.

3.6.15.5 Special maintenance procedures. - This part shall contain the procedures or methods for doing all special tasks, usually tasks which are not recurring and, therefore, not listed in section 5. This includes special adjustment, long-interval alignment or calibration procedures, removal and replacement of complex assemblies, display cathode ray tubes, etc. Maintenance required because of component or unit failure shall not be a part of these procedures but shall be included in section 7 of the instruction book.

Downloaded from http://www.everyspec.com

3.6.16 Section 7 of instruction book, corrective maintenance. -This section shall contain step-by-step instructions required to diagnose, isolate, and repair faults in the equipment in the shortest possible time. The instructions shall include safety precautions to be observed, tools and test equipment (including setup) required, necessary equipment control settings, and parts and materials required. Instructions for any required assembly, disassembly, and replacement of parts shall be included. Complex procedures shall be supported by photographs or drawings as required. Appropriate illustrations in section 11 of the instruction book shall be referenced in the text. Each procedure shall, as a final step, reference a procedure or procedures in section 6 of the instruction book for verifying the operational status of the repaired equipment. A two-level presentation, as described in the following subparagraphs, is required.

3.6.16.1 Onsite corrective maintenance. - Most of the onsite maintenance performed by technicians will not be concerned with isolation and repair of faulty components at the remote sites. This remote site corrective maintenance will involve troubleshooting only to a level of replaceable modules or chassis. The removed units are then transported to central repair facilities for the sector or, if required, to depot repair. Procedures for this maintenance shall be written accordingly and shall be supported by detailed block diagrams complementary to the text. Detailed requirements for these diagrams appear in 3.6.20.

3.6.16.2 Offsite repair. - Component-level troubleshooting and repair will be performed by personnel from the sector, from the depot, or from the field support engineering division of the FAA. Troubleshooting procedures shall provide step-by-step instructions for isolation of a fault to the lowest replaceable component (lrc) level. The isolation methods used shall permit personnel to isolate by functional entity rather than by extensive circuit tracing. If necessary, instructions for tracing through interface connections to another unit shall be provided. Appropriate schematic, mechanical, piping, signal flow, and wiring diagrams in section 11 shall be referenced. Troubleshooting charts and tables shall be functionally related to the theory of operation and appropriate diagrams. If a particular procedure is written for depot use only, it shall be so designated.

3.6.16.3 Test equipment. - External test equipment required but not supplied shall be that which is readily available at the installation sites. The contractor may obtain lists of such equipment from the CO. References to test equipment shall use generic terms rather than specific brand and model numbers and shall state the measurement capabilities of the equipment.

3.6.16.4 Overhaul, maintenance, and repair standards. They shall provide detailed overhaul, maintenance, and repair standards, including rejection criteria for wear, dimensions, clearances, surface finishes, electrical resistances, alignment, backlash, play, leakage, vibrations, noise, aging, corrosion, erosion (or other standards of acceptance, as appropriate) for

Downloaded from http://www.everyspec.com

each applicable part. Criteria shall be predicated on a need for satisfactory peformance with no more than routine maintenance until the next similar inspection. The section shall be divided into separate areas as follows:

(a) Area 1. A life cycle schedule of the required overhaul and corrective maintenance actions arranged as follows:

Frequency	Title of Work Item	Applicable Paragraph of Area 3

(b) Area 2. Overhaul, maintenance, and repair standards providing rejection criteria for all parts subject to continuing degradation in service. Reference the drawings in Area 5 as appropriate.

(c) Area 3. Details of all maintenance and overhaul actions (tests, disassembly, adjustments, reconditioning, replacements, assembly, calibration of test equipment, and the quality assurance actions outlined in section 4 of this specification). Reference the drawings in Area 5 as appropriate.

(d) Area 4. Performance test and quality control actions outlined in section 4 of this specification during and after reassembly to assure satisfactory performance.

(e) Area 5. Detail, subassembly, and assembly drawings necessary for a thorough understanding of the maintenance and overhaul actions.

3.6.16.5 Packing instructions. - Packing instructions shall be provided for equipment requiring shipment from the site for overhaul, repair, or calibration.

Downloaded from http://www.everyspec.com

3.6.17 Section 8 of instruction book, parts list. - This section shall contain a tabulation of the descriptive and source data necessary for procurement of all electrical and selected mechanical replacement parts used in the end article. It shall be entitled "PARTS LIST" and shall be subdivided to indicate the reference designation (see 3.4.1) of the primary system, set, group, unit, assembly, subassembly, and part in alphanumeric order by reference designation. The "top-down, breakdown" method and the alphabetic indenture letter, as described in 3.21.2.4 of Specification FAA-G-1210, shall be used to further break down and illustrate the relationship of each line with its designated parent unit. Parts location illustrations are required for all parts listed in the parts list section. These illustrations shall be inserted in section 11. However, parts location illustrations need not be prepared when illustrations elsewhere in the manual adequately depict physical location and reference designation of the parts.

3.6.17.1 Parts list format. - The parts list format shall be in accordance with figure 22. All parts shall be fully identified in order to procure replacements without the necessity of correspondence with the contractor or parts manufacturer. The list shall include data covering a description of all replaceable parts of assemblies that are normally subject to disassembly. Examples of parts to be listed are capacitors and certain mechanical parts (3.6.17.5) for rotating electrical equipment and coils and contacts for electrical contactors and relays. Listed tolerances of parts shall agree with those actually used in production models of the equipment produced by the contractor. A substitution guide for solid-state components shall be provided when directly interchangeable replacements are available. The parts list shall contain the following six columnar designations (explanations are given in parentheses).

Column 1 Reference Designation	(Reference designation as prescribed in paragraph 3.4.1. The applicable figure number shall be listed beneath this reference.)
Column 2 Indenture Letter	(Indenture letter for the system, set, group, unit, assembly, sub-assembly, or part as prescribed in Specification FAA-G-1210.)
Column 3 Name of Part/Description	(Item name as prescribed in Specification FAA-G-1210. The name is to be complete for each part listed. When the item name and description are identical to an item previously listed (except reference designation), use the entry "same as ..... (reference designation of identical item previously listed)," and leave all other columns blank.) See 3.6.17.11 for plug-in units.

PARTS LIST					
Ref. Desig.	Indent.	Name of Part/ Description	Mfrs. Code Number	JAN/MIL Mfrs. Part No.	Notes

Figure 22. Parts List Format

Downloaded from http://www.everyspec.com

Downloaded from http://www.everyspec.com

Column 4 Manufacturer's Code Number	(Insert the five-digit code assigned to the actual manufacturer of the part used in the equipment, as given in the Federal Supply Code for Manufacturers, Federal Cataloging Handbook H4-1. This column shall be left blank for resistors and capacitors where the entry in the fifth column is a JAN or MIL type designation which fully specifies all characteristics of the part. Note that the military specification does not meet this requirement.)
Column 5 JAN, MIL, or Manufacturers Part Number	(JAN or MIL designation as given in MIL specifications or number;i.e., catalog number,type number, or drawing number, by means of which the part is identified. The contractor's part number or drawing number alone will not be sufficient, unless the contractor is also the part manufacturer.)
Column 6 Notes	(No entries in this column;for FAA field use).

3.6.17.2 Use of latest JAN/MIL designations. - When JAN/MIL parts used in the equipment have become obsolete due to military specification revisions, and the information is available to the contractor prior to the completion of the instruction book manuscript, the contractor shall add to the listing of the actual part used the statement "REPLACE WITH" followed by the JAN/MIL designation of a suitable replacement part selected from the current edition of the applicable military specification.

3.6.17.3 Design change incorporation. - When design changes are made to production units of equipment prior to publication of the instruction book, the contractor shall correct the manuscript copy to reflect the changes. If the changes affect units by serial numbers, the applicable serial numbers shall be indicated in section 1 of the manuscript and the parts list shall reflect the part changes. When equipment changes are made subsequent to publication of the instruction book and prior to the expiration of the contract, change sheets shall be issued for the affected pages in the parts list. The changes shall differentiate between old and new or different components and shall specify whether or not they are interchangeable.

3.6.17.4 Electrical parts. - Electrical parts are defined in the following listing. The parts list column headed "Part Name and Description" (column 3) shall contain, as a minimum, complete electrical data on each electrical part. Mechanical data as described in 3.6.17.5 shall also be provided. Additional mechanical data may be added at the option of the contractor. Minimum data requirements are specified in the following list.

Downloaded from http://www.everyspec.com

TYPE OF PART	MINIMUM DATA TO BE FURNISHED
Batteries	Type of battery, dimensions, voltage rating, ampere-hour or other capacity rating specified by manufacturer, and ANSI designations.
Cables	Interconnecting cables complete with connectors, similar transmission lines, delay lines, and waveguides complete with fittings shall be listed and shall include overall length, type of conductor, and types of fittings.
Capacitors	Capacitance or capacitance range, rated tolerance, working voltage, maximum breakdown, voltage for dielectric types, type of dielectric, maximum current at operating frequency such as for mica capacitors in transmitting tank circuits and antenna networks.
Connectors	Number and type of contacts, male or female, whether fixed or movable, and special keying information.
Crystals	Crystal unit type number, applicable JAN or MIL specification number, crystal holder type number, frequency or nominal frequency band, frequency tolerance in percent and rated operating temperature range, type of temperature control, mode of operation, load capacitance, and tolerance.
Dynamotors	See motors.
Fans and Blowers	Complete motor data, air capacity rating (NEMA or NAFM), and blade or rotor size.

Downloaded from http://www.everyspec.com

TYPE OF PART	MINIMUM DATA TO BE FURNISHED
Filters, IF Transformers, Networks, Compounds Tuned Circuit Assys, etc.	Operating frequency, band of frequencies passed or rejected, and impedance, as applicable.
Fuses	Current rating, voltage rating, size, whether quick-acting or delayed type, and type of fuse holder. See 3.6.17.8.
Generators, Exciters, etc.	See motors.
Handsets	For telephone handsets and microphone headset combinations, list nominal impedances, types of units, and switches, if any.
Indicating Devices Except Meters and Thermometers	Current and voltage ratings, base or mounting information, and whether connections are clip-on, solder, or screw type.
Indicating Instruments	Range, ratings, case type, scale type, and special details. Where meter switching is employed, state meter characteristics that must be duplicated to maintain initial accuracy when substituting replacement meters.
Inductors, Audio Frequency (AF)	Nominal inductance, dc resistance, current ratings, voltage insulation rating.
Inductors, Radio Frequency (RF)	Nominal inductance, dc resistance, current ratings (if practical), and functional name.
Integrated Circuit Devices	Package style, proprietary title, and other data necessary for procurement.
Jacks and Plugs	Spring arrangement, nominal diameter of sleeves, and whether tip and sleeve or tip, ring, and sleeve.

Downloaded from http://www.everyspec.com

TYPE OF PART	MINIMUM DATA TO BE FURNISHED
Microphone	See handset.
Motors and Prime Movers	Input voltage, frequency, number of wires, phase, current, power factor, shaft horsepower (hp), rotations per minutes (rpm), and duty.
Motor Generators	See motors.
Printed Circuit Board (Assembled)	Name and circuit function, size, number of plug contacts, and keying information.
Printed Circuit Board (Unassembled)	(List as printed wiring card, unassembled.) Describe use, size, number of plug contacts, and special keying information. Add "Same as" followed by appropriate title when applicable. This requirement is a modification to the standard entry for Column 3.
Pumps	List horsepower, voltage rating, and capacity.
Rectifiers and Diodes, Semiconductor	List type, input voltage, output voltage, current, load voltage drop, maximum operating frequency, and other appropriate rating data.
Relays and Contactors	List dc resistance of coils, heaters, etc., ac or dc operating voltage, contact ratings, contact forms. Use the following terms (Form A through Form D) as applicable from their definitions: Form A: "make" contact, single throw, normally open. Form B: "break" contact, single throw, normally closed. Form C: "break/make" contact, double throw. Form D: "make before break" contact (form A with an added break contact on the make spring).

Downloaded from http://www.everyspec.com

TYPE OF PART	MINIMUM DATA TO BE FURNISHED
	Form E: "break, make before break" contact (form D with an added break contact on the armature spring).
Resistors, Potentiometers, and Attenuators	Resistance values, rated tolerance, wattage, type of resistance elements, and whether fixed or variable.
Speakers	Size, type, impedance, and wattage rating.
Switches, Interlocks, Thermostats, and Telephone Dials	Type, number of poles and positions, voltage and current rating, operating temperatures, and approximate size.
Transformers (AF and RF)	Functional names, dc resistance of each winding, and other data as applicable.
Transformers, Power and Frequency	Nominal voltage and frequency ratings of primary, voltage and current ratings of each secondary, voltage insulation, dc resistance of each winding. Include number of turns, wire size, and type of insulation for each winding.
Transistors and Tubes (Electron)	Type, applicable voltages, and other data needed for procurement.
Voltage Regulators (Except Electron Tubes)	Input and output voltages, currents, range of control and type.

3.6.17.5 Mechanical data. - Identification and ordering data shall be furnished for normally replaceable mechanical parts for rotating electrical equipment. In addition, data shall be furnished for mechanical parts of the basic equipment which are subject to wear or aging, damage, disassembly, or which are not suitable for reuse after disassembly.

3.6.17.6 Transformer size data. - Where appropriate, the MIL-T-27 case designation shall be shown in column 3 of the parts list for all laminated iron core transformers and inductors having cases which correspond dimensionally with the MIL-T-27 case sizes (whether or not MIL-T-27 is otherwise applicable).

3.6.17.7 Lubrication data. - Lubricants required for maintenance of the equipment shall be listed and shall provide as a minimum, the type of lubricant, application, applicable specification numbers and identifying

Downloaded from http://www.everyspec.com

codes, and commercial designations for each lubricant known to meet all performance requirements. Where commercial designations are provided, the manufacturer's name and address shall be provided.

3.6.17.8 Indicating fuse holder. - Data for indicating fuse holders shall include a description of the complete holder assembly including lamp cap, resistor (with rating if replaceable), and type of fuse accommodated. This shall be shown under the socket reference designation assigned to the fuse holder. The fuse shall be listed separately with complete entries under its reference designation.

3.6.17.9 Indicator lights. - Data for indicator lights shall include a description of the complete assembly, including the lens cap and the resistor with rating data (even if not replaceable). The type and rating of lamp shall also be shown under the socket reference designation assigned to the indicator light assembly. The lamp (if replaceable) shall be listed separately with complete entries under its reference designation.

3.6.17.10 Tube sockets. - A description of the complete assembly, including capacitor data, shall be shown under the socket reference designation. Tube data shall be listed separately with complete entries under the appropriate reference designation.

3.6.17.11 Listing of plug-in modules or printed wiring circuits. - If the equipment includes plug-in modules or printed wiring circuits, they shall be treated as subassemblies as follows: Each plug-in unit shall be listed under its subassembly reference designation with required descriptive data, followed by a listing of the basic printed circuit board and all electrical parts mounted thereon, arranged in alphanumerical order of the reference designations of parts, and including all applicable column entries for each part. However, the mounted parts shall not be listed where the "same as" entry (see 3.6.17.1) applies to the complete plug-in subassembly. Where parts are so listed, they shall not be relisted elsewhere in the parts list. Resulting gaps in the basic alphanumerical sequence of the parts list shall be filled with locating entries such as "R29 to R42: See _____ (enter reference designation for plug-in card or module under which R29 to R42 are listed)."

3.6.17.12 List of manufacturers. - Provide a table of manufacturers, addresses and supply codes at the end of the parts list section. The table shall be in numerical order of the supply code. The data for this list shall be styled from the Federal Supply Code for Manufacturers, Cataloging Handbook, H4-1. Contractors are cautioned that Federal Supply Catalog publications are issued in microfiche format, and microfiche reader equipment is needed to retrieve the microimage information.

Downloaded from http://www.everyspec.com

3.6.18 Section 9 of instruction book, installation, integration, and checkout. - Only information that is directly related to installation, integration, and checkout shall be included in this section. Instructions for recurring maintenance procedures shall not be included. This section shall include appropriate installation drawings and the following information:

(a) Special requirements and procedures for site selection and survey identified by equipment configuration.

(b) Requirements and source information for all special and commercial tools and test equipment required.

(c) Listing of installation materials required.

(d) Instructions for unpacking and handling.

(e) Instructions for preparation of facilities.

(f) Instructions for mechanical assembly and mounting, including bolting diagrams, grounding and bonding instructions, power load distribution requirements, wiring diagrams, and safety precautions. Clearances required for proper maintenance access and equipment ventilation shall be included with mounting instructions.

(g) Instructions for integration and interfacing with other equipment.

(h) Requirements for equipment cooling or fluid charging.

(i) Recommendations, procedures, and precautions for reduction of, and protection against, adverse effects of electrical and electromagnetic interference, lightning, powerline surges, etc.

(j) Test specifications, test procedures, test scripts, and test data sheets required to demonstrate and verify that the equipment, as installed, satisfies the required functional, performance, and interface requirements.

(k) Waveforms and photographs.

3.6.18.1 Site information. - Site information shall be furnished when special site considerations are necessary because of equipment configuration or purpose. If all required site information is contained on the installation drawings, the drawings shall be incorporated into the manuscript and referenced by figure number. Existing FAA site preparation and installation handbooks are available to the contractor.

Downloaded from http://www.everyspec.com

3.6.18.2 Installation drawings. - Engineering drawings in this category shall include, as applicable, but not necessarily be limited to: layout details, interface pipe, cable, and other attachments, including identification of required hardware to effect installation; information on limitations of space and clearance requirements; data on limitations of interconnecting criteria such as maximum length of cables, piping, and tubing; environmental considerations such as air conditioning, heating and ventilation; electromagnetic compatibility, shock and vibration installation requirements; auxiliary equipment and facility requirements; safety precautions; and human engineering considerations. These drawings shall contain all the information needed to supplement the text in providing complete installation instructions.

3.6.18.3 Unpacking and repacking. - Information supplemental to the installation drawings regarding unpacking and repacking shall be included. Step-by-step procedures necessary to prevent damage to the equipment or injury to personnel shall be provided. Supporting illustrations shall be provided to clarify the procedures. Step-by-step instructions (with illustrations) for repacking the equipment for any subsequent shipment shall be provided. Environmental conditions affecting storage shall be described.

3.6.18.4 Input requirement summary. - A summary of the input data contained on the installation drawings shall be included. Parameters, with tolerances, shall be included with each of the inputs listed. The summary shall include data on power, ventilation, heating, cooling, etc.

3.6.18.5 Installation procedures. - In addition to the information contained on the installation drawings, step-by-step instructions shall be provided for complete installation. The instructions shall, as a minimum, include assembly, mounting, and connection procedures, servicing procedures, and bonding and grounding procedures as applicable. Connection procedures shall include interconnection of equipment units and electrical, plumbing, transmission line, or other interface connections to the equipment. Appropriate routing diagrams shall be included. Safety precautions shall be included for procedures involving hazardous conditions. Step-by-step instructions for integrating the equipment with other equipment shall be provided.

3.6.18.6 Inspection. - Prior to energizing the equipment, an inspection shall be made of the installation. A checklist shall be provided to verify the following:

(a) That there is no damage to the equipment and if so, the extent of the damage. Within the term "damage" shall be any misalignment, bent or cracked parts, broken glass faces of meters, dials, or gages, and cut or frayed wiring. The inspection process shall include an effort to detect missing parts and loose or disconnected parts or wires.

(b) All cables, antennas, waveguides, transmission lines, coolant lines, piping, interfacing with other equipment, etc., are installed in accordance with plans and specifications and that continuity exists in all interconnections.

Downloaded from http://www.everyspec.com

(c) Listed test equipment is operating satisfactorily and is properly calibrated. Dates of calibration and degrees of accuracy of calibrated test equipment are properly recorded.

(d) Equipment has been properly installed to allow adequate access to the equipment for maintenance.

(e) Rotating devices are free from obstruction. Motors with openings into rotor and winding areas are free of packing material or other foreign materials.

(f) Adequate ventilation has been provided to equipment areas that generate heat.

(g) All preenergizing servicing procedures including lubrication, charging, fueling, etc., have been accomplished as required.

3.6.18.7 Initial startup and preliminary testing. - Step-by-step procedures for initial startup and preliminary testing of the equipment subsequent to inspection shall be provided. Equipment performance checks in section 6 shall be referenced as necessary but shall not be repeated in this section. In addition, procedures shall be provided for:

(a) Testing of equipment supply circuits, including electrical distribution panels, switches, breakers, relief valves, and interlocks.

(b) Testing of electrical cables.

(c) Testing of all piping.

(d) Testing of mechanical cables.

3.6.18.8 Installation verification test. - Complete instructions shall be provided for testing the equipment in all modes of operation. Procedures shall include checking of gages, meters, alarms, and other sensing devices for proper operation and calibration. Tests shall verify that all inputs are within specified tolerances. Necessary setup data shall be included in each procedure. Where it is required that alignment be accomplished prior to performing a test, the alignment shall be included or referenced in the procedure. Procedures required for section 6 shall be referenced as necessary.

Downloaded from http://www.everyspec.com

3.6.19 Section 10 of instruction book, computer software. - Detailed information shall be included in this section for equipment that uses stored programs to control digital processors as an integral part of one or more of the operational, monitoring, control, and maintenance functions of the equipment. The information contained in this section shall be limited to the description of the stored programs themselves. Specific instructions for using the programs shall be included in other sections of the instruction book as appropriate. The section shall include the following information:

(a) Program hierarchy

(b) Program descriptions

(c) Listings

3.6.19.1 Program hierarchy. - A description shall be provided for the hierarchy of stored programs that are used by the equipment. A functional block diagram shall be provided which shows the relationship of each program with every other program and with the equipment. The block diagram also shall indicate the flow of data between the various programs and between the programs and the equipment. The block diagram shall be accompanied by a narrative text. The various sequences of program executions possible shall be described. The descriptions shall include the purpose of each run sequence and the programs that are executed during the sequence. The progression of runs as the equipment cycles from one run to another shall be described to show a complete cycle of runs.

3.6.19.2 Program descriptions. - A description shall be provided for each program supplied as part of the equipment. The description shall include the following information.

3.6.19.2.1 Program purpose. - The program purpose shall be a brief statement that describes the purpose of the particular program and its relationship to other programs used by the equipment.

3.6.19.2.2 Program capacity. - The description of program capacity shall include a summary of memory requirements for storing and running the program, processing time requirements for the program, and the number of displays, requests, and inputs and outputs that are accommodated by the program.

3.6.19.2.3 Interface. - All interfaces between the subject program and the equipment and other programs shall be described. The descriptions shall state the purpose of each interface, identify the data to be exchanged via the interface, and contain an estimate of data quantity and transfer rates requirements. Type of data, specific interface messages, and formats shall be included. Specific timing and sequencing requirements shall be identified.

Downloaded from http://www.everyspec.com

3.6.19.2.4 Program input data. - All input data to the program shall be identified by type, source, units of measure, limits, precision, and frequency of updating. The description shall consist of the input formats, sample inputs, and menu screens (if applicable). The sample inputs shall represent actual values as entered by the operator. Where menu screens are used by the operator, the actual menus shall be reproduced in the text.

3.6.19.2.5 Program output data. - All program output data shall be identified by type, units of measure, scaling, precision, format, destination, and frequency of transmission. The output formats for each program shall be included in the form an illustrated layout. Text keyed to the layout shall describe, as applicable, header information, information in the body of the output, and trailer information. Sample outputs in the form of actual reports or screens generated by the programs shall be reproduced and included.

3.6.19.2.6 Database descriptions. - All items contained as stored, fixed values within the stored program shall be described. The descriptions shall include a descriptive title, number of bits, most significant bit, coding type, scaling factor, and item value. Each file and each table within the file shall be listed. The function of each table and file shall be described, and the location and required storage space shall be given.

3.6.19.2.7 Program documentation. - Each program shall be documented by inclusion of the following items within the instruction book.

(a) A flow chart of the entire program with each subroutine represented by at least one block.

(b) A flow chart for each subroutine with each block representing no more than 20 executable program statements.

(c) A separate description for each flow chart. The description shall be concise with each flow chart block represented by at least one paragraph. Program logic shall be described to show the step-by-step instructions within the program. The purpose and description of each mathematical operation shall be included. The description shall identify accuracies required, sequence and timing of events, and relevant restrictions or limitations. Derived equations used within the stored programs shall be shown with appropriate mathematical and control signals defined.

3.6.19.3 Listings. - Listings related to the stored programs shall be provided as called for in the following paragraphs.

3.6.19.3.1 Program listings. - Listings of the stored programs for each program shall be included. The listing shall be a reproduction of the actual computer source code used by the equipment. All descriptions of referenced procedures, routines, and data shall be included with this

Downloaded from http://www.everyspec.com

listing and arranged for convenient access. In the case where the stored program consists of assembler code generated by compiling a source program written in higher level language, listings shall be provided for both programs.

3.6.19.3.2 Cross-reference listings. - A cross-reference listing shall be provided relating each data name to the location of every statement referring to it and relating each routine to the location of every routine calling it. The list shall be included as a sequential table in alphanumeric order.

3.6.19.3.3 Load maps. - The format, method, and location in which the various components and portions of the stored programs are loaded into the digital processor shall be described. The mapping shall include delineating all of the portions of the programs that are to be concurrently resident in the device in question and the location and size of each portion of the programs. If the equipment has more than one defined configuration or mode of operation for the stored programs, the above information shall be provided for each configuration or mode.

Downloaded from http://www.everyspec.com

3.6.20 Section 11 of instruction book, troubleshooting support data. - This section shall contain line drawings, photographs, schematics, and other diagrams and illustrative data required for a complete understanding of equipment operational theory and for locating and correcting faults. Where possible, this data shall be arranged in the order as referenced in the text of the instruction book. All illustrative data not peculiar to one particular section of the instruction book and all data with space requirements that hinder its inclusion within the text (material requires more space than 8-1/2 by 11-inch page allows) shall be presented in this section. Duplication of previously presented data is to be avoided. In addition to the requirements outlined in the subparagraphs that follow, attention is called to those requirements of a general nature that apply from these paragraphs and their subparagraphs:

(a)	3.1.4	Nomenclature consistency.
(b)	3.1.7	Definitions.
(c)	3.3.1.2.4	Page numbering.
(d)	3.3.1.3	Draft artwork.
(e)	3.4	Reference designations, symbols, and abbreviations.
(f)	3.5	Security classification marking.
(g)	3.6.11.2.3	Logic circuits.

3.6.20.1 Method of presentation. - Depending on the nature and complexity of the equipment, several methods can be used to present the material in this section. The primary use of this data is for training and troubleshooting; therefore, strong consideration must be given to ease of use and space constraints for its use in a classroom or on site. The CO shall advise the contractor which of the methods described below are to be used.

3.6.20.1.1 Contractor's commercial publications. - In some instances involving the use of off-the-shelf equipment, existing commercial publications may be acceptable. The CO shall evaluate these publications for compliance with FAA requirements and advise the contractor whether the documents or portions thereof are acceptable.

3.6.20.1.2 Standard (8-1/2 by 11-inch) binding. - Smaller equipment units requiring little illustrative data may be presented completely in a one-volume instruction book. The use of foldouts shall be held to a minimum and shall not be such to affect the uniform thickness of the volume. Extensive troubleshooting support data shall be bound in a second volume that shall contain all foldout data. Where required, spacers shall be inserted at the bound edge to preserve a uniform thickness of the volume. Requirements governing the overall size and image area of foldouts are stated in 3.6.20.4.

3.6.20.1.3 Separate oversize (11-by 17-inch) binding. - This is the most preferred presentation of troubleshooting support data where numerous oversize drawings or charts are required. Foldouts are not permitted; consequently no apron is required. The image area for one sheet shall be 9-1/2 by 14-3/4-inches (see figure 23 for dimensions). If one page is insufficient, the data shall be presented on multiple sheets as outlined in 3.6.20.4.

Downloaded from http://www.everyspec.com

3.6.20.2 Legibility. - All numerals and lettering on artwork shall be typed or lettered with a mechanical device (such as Leroy) in elite or Roman, block style, and all capitals if letters. Freehand lettering is prohibited. Lettering size will be governed by the reduction ratio planned. The size shall be planned to produce lettering within the body of the illustration that will be a minimum of 5 points when printed, and lettering outside the illustration area that will be 10 points when printed. Indexed legends and tables within the illustration area shall have lettering with a minimum of 8 points when printed. Line artwork shall be prepared with line weights of sufficient strength to reproduce sharply and clearly at the final reproduction size. Final printed width of lines shall not be less than 0.01 inch. Parallel lines of wiring on diagrams shall result in separation of no less than 1/16 inch after reduction. When a number of adjacent parallel lines depicting wires are drawn using twice the minimum spacing or less, they shall be in groups of not more than three to facilitate reading of the drawing, with at least 1.5 times the within-group spacing between outer wires of adjacent groups.

3.6.20.3 Numbering and titling. - Illustrations shall be at final reproduction size and permanently mounted in position on a text page or on a page with marginal data. All illustrations shall be numbered and titled. Illustration numbers shall consist of the section number, a dash, and a serial number, in that sequence. For example, the first figure in section 3 would be numbered 3-1; the fourth figure would be 3-4. Illustration titles shall contain the word "Figure," followed by the figure number, in turn followed by a caption which describes the illustration. The number shall be followed by a period and two spaces before the title. For example, "Figure 3-5. Controls and Indicators, Video Amplifier." For illustrations which are a full page or less, the number and title shall be centered below the illustration; for foldout illustrations, the number and title shall be placed so as to be visible at the bottom right edge of the printed page after folding. The number and title when reduced to final printed size shall be a minimum of 10 points.

3.6.20.4 Size of illustrations. - Illustrations shall be planned to conserve space while adequately portraying the desired details. For ease in preparation, they may be produced oversize and then reduced to final size, providing all requirements for the finished illustration are met. Illustrations of a single-page size or less are preferred. When material cannot be presented satisfactorily on a single 8-1/2-by-11-inch page, foldout sheets shall be used where the material is bound in that size binding. If the material is presented in an oversize volume, the page size is restricted to 11 by 17 inches, with no foldouts permitted. Printing is on one side only. Foldout sheets shall be printed on one side only and shall have a left-hand apron of one page width so that the entire diagram extends beyond the book to the right when the sheet is unfolded. In no case shall the overall width of the foldout sheet exceed 24 inches. They shall be folded in a manner that produces the least number of folds and permits reading of the page number, figure number, and title without unfolding the sheet. If the material cannot be presented completely on one foldout sheet or on one oversize

Downloaded from http://www.everyspec.com

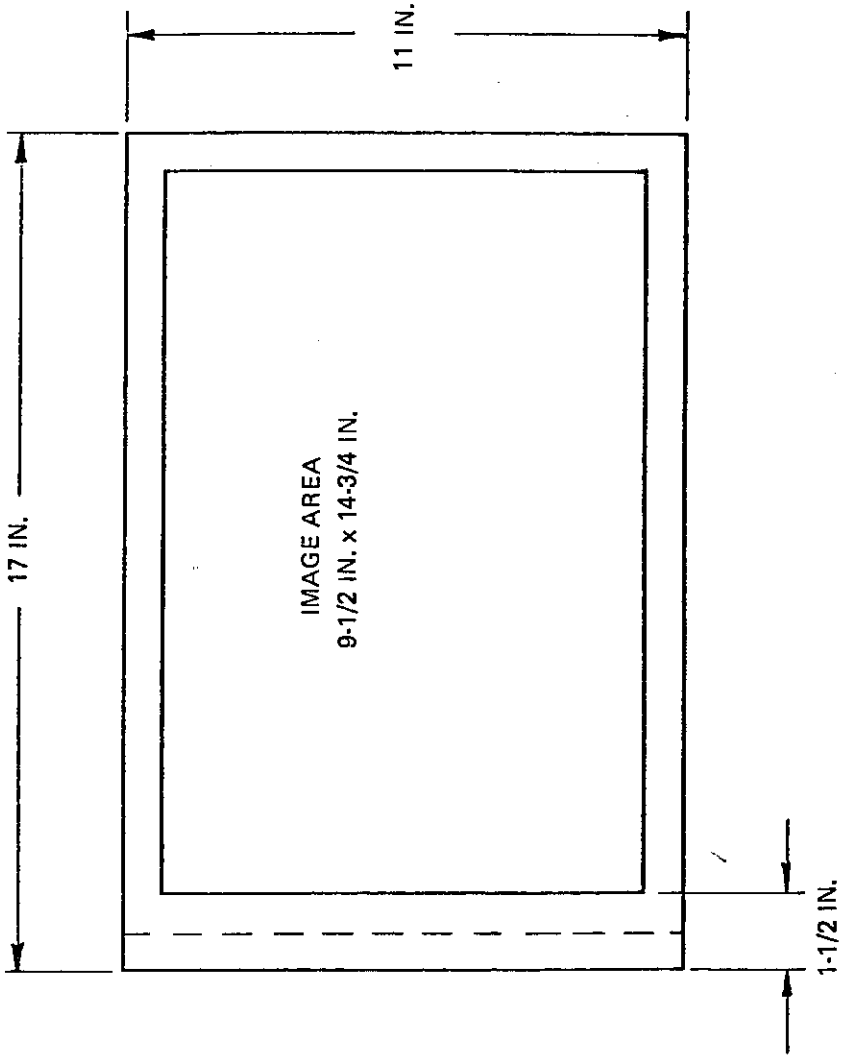

Figure 23. Oversize Sheet Dimensions

Downloaded from http://www.everyspec.com

sheet, multiple sheets shall be used, with the illustration broken at points which permit easy follow through from one sheet to another. The same figure number and title shall be used on all sheets of a series, and each sheet shall be designated by a sheet number of the total number of sheets; e.g., sheet 1 of 4. Figure 24 shows the permissible size of a foldout sheet along with the dimensions for apron, margins, and image area.

3.6.20.5 Block diagrams. - Block diagrams shall be provided to support the simplified theory of operation and for use in the maintenance performed by the site technician. They shall be constructed so that each major block represents a unit capable of being replaced by a site technician in performance of his normal duties. Subordinate blocks shall be shown only when essential to the understanding of equipment operation for this level of maintenance. All details outlined in 3.6.11.1 shall be shown. Figure 25 (foldout) is an example of the block diagrams required. One overall block diagram of the complete equipment shall be provided. This block shall show all signal interface with other equipment. Each block shall reference the applicable detailed schematic diagram.

3.6.20.6 Major function diagram. - One major function diagram shall be provided for each wraparound assembly, cabinet, or other enclosure except those that contain only power connections. The diagram shall include signal and voltage data, terminal strip and connector designations, hardware and functional level designation, etc. The functional interrelationship of all functional entities and devices shall be illustrated. Power distribution shall not be shown on the major function diagram.

3.6.20.7 Schematic diagrams. - Schematic diagrams shall be provided to enable a complete understanding of detailed theory of equipment operation and to provide circuit tracing in the isolation of equipment faults to a component level. The diagrams shall indicate signal flow and significant voltages at busses, tubes, pins, transistor elements, etc. They shall indicate waveforms and voltage values of the processed signal as it enters and leaves each component group that performs an alteration in signal shape or strength (amplifier, modulator, multivibrator, etc.). Schematic diagrams shall be blocked to identify individual component groups. Each component group shall be assigned an abbreviation identifying its function (AMPL - amplifier, MOD modulator, etc.; see ANSI Y1.1 for abbreviations). Blocked schematics (see figures 26 and 27-foldouts) shall be provided for each device except wraparound assemblies, cabinets, or other enclosures. Figures 25, 26, and 27 (foldout) show how the troubleshooting support data is partitioned to the levels of training and maintenance. Figure 25 (foldout) is a chassis representation prepared for a site technician and is sufficient for use in troubleshooting to a replaceable chassis or plug-in-unit level. Figure 26 (foldout) represents the same chassis with the detail expanded to a level required for use by engineers. Figure 27 (foldout) shows a further breakdown to component level of one subunit of figure 26 (foldout). Wraparound

Downloaded from http://www.everyspec.com

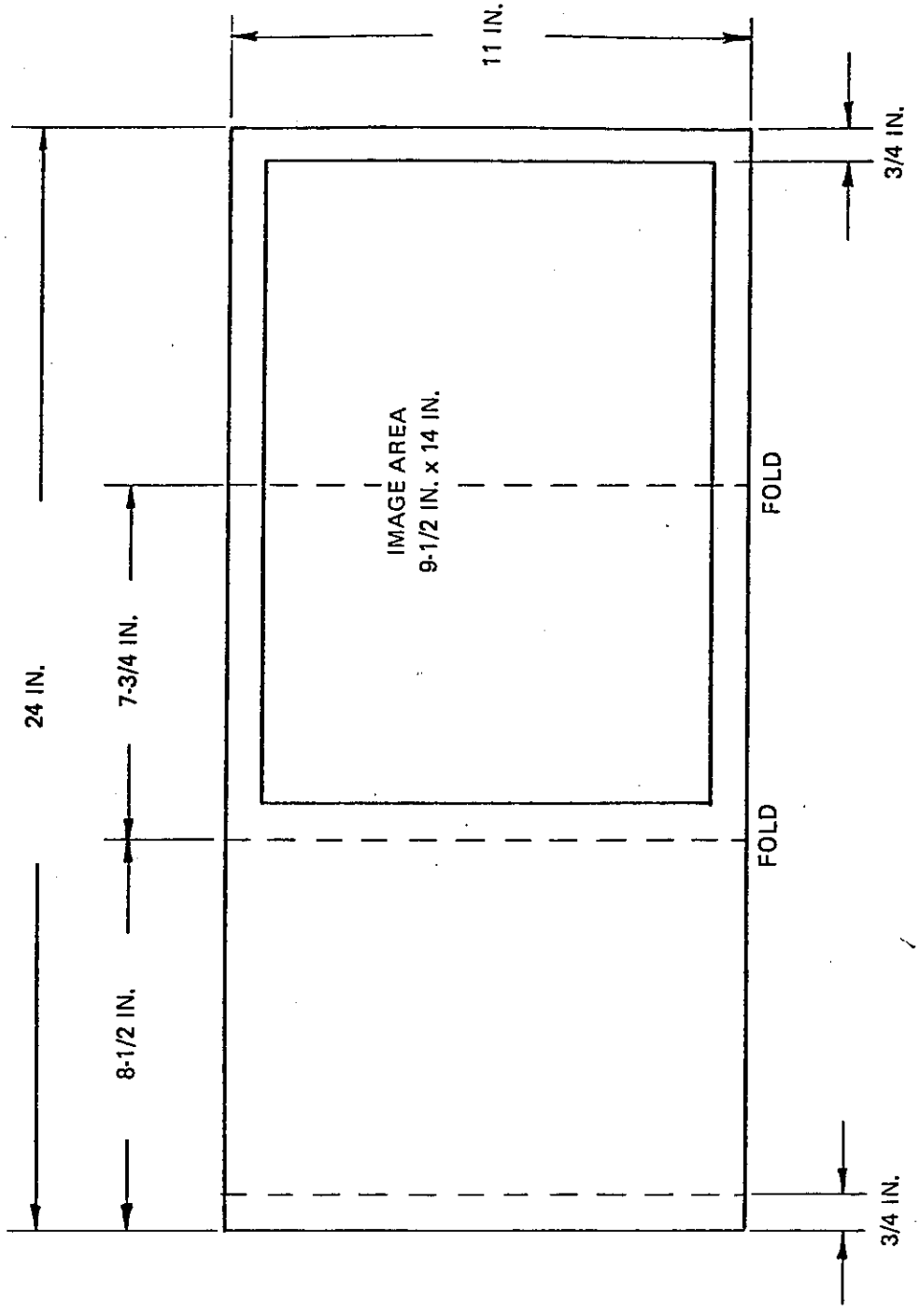

Figure 24. Foldout Page Dimensions

Downloaded from http://www.everyspec.com

schematic data shall appear on either a major function diagram or the power distribution diagram as applicable. Each component shall be assigned a reference designation. Relays shall also be assigned a functional name. Relay circuits shall be shown with all points and terminals. Switch and relay contacts shall be shown in the deenergized position. Diagrams shall contain a statement that switches and relay contacts are shown in the deenergized position. All schmatic diagrams shall indicate the sources of inputs to the diagram and the destination of all outputs. References shall be by figure and sheet number and shall identify the tie-in with that diagram by reference designators, diagram coordinates, or both.

3.6.20.7.1 Diagrams for analog equipment. - Diagrams for (nondigital) analog types of equipment shall provide information at the basic component level. All individual components shall be identified, including those contained within integrated circuits. Details shall be adequate to allow circuit tracing by wiring, by schematic, and by function.

3.6.20.7.2 Diagrams for functional entities. - Functional entity diagrams providing information for such items as amplifiers, flip-flops, oscillators, buffers, gates, etc., shall include appropriate symbols, logic interconnection between functional entities, and interconnection to other units. Digital systems shall make extensive use of these diagrams.

3.6.20.8 Functional circuits. - Circuit elements shall be grouped into functional entities which shall be arranged on the page to make the direction of signal flow obvious. When possible, flow shall be shown from left to right. Layout shall not be distorted to achieve fit. For electrical-electronic equipment, the circuit elements shall be grouped into functional entities according to the following rules:

(a) Circuit elements or groups of elements that work together to perform a basic function shall be grouped to form functional entities; e.g., amplifier, emitter follower, clamp, etc. They shall be drawn to resemble basic circuits.

(b) Groups of functional entities that work together to provide some discrete system function, and which cannot be described adequately at a system level, shall be presented as a more general functional entity; e.g., voltage regulator, stagger-tuned IF amplifier, etc.

(c) Basic grouping shall consist of the least number of circuit elements that perform a discrete function; e.g., amplifiers, resistive or capacitive dividers, etc. Perfect functionalization shall be subordinate to conventional presentation of a specific circuit; e.g., the bias divider for a transistor shall not be shown separately but shall be included in the amplifier grouping.

Downloaded from http://www.everyspec.com

(d) Interstage coupling shall be assumed to be part of the input to a stage; however, transformer coupling shall be assumed to be part of the output of the stage.

(e) Power inputs to functional entities shall be shown.

(f) Functional entities that distribute power shall be grouped into composite power functions. All tube filaments within an assembly shall be grouped (except those filaments that are an integral part of the cathode).

3.6.20.9 Nomenclature and reference designations. - Each assembly or subassembly having a reference designation or other identifying number shall be identified by having that designation placed in the upper left corner of the outlining border of the assembly or subassembly. The designation shall be followed by the official nomenclature of the unit. When the complete illustration is a part of a larger assembly, that assembly shall be identified by placing the words REF DESIG PREFIX, followed by the assembly's designation, in the lower right corner of the border representing the hardware. Reference designations for multiple-use assemblies shall be identified by a flag note and explained.

3.6.20.10 Discrete circuit element data. - The values of all resistors, capacitors, and inductors shall be placed on schematic diagrams. All elements shall be identified by appropriate reference designations.

3.6.20.11 Identification of adjustments and controls. - Adjustments and controls shall be identified using panel nomenclature. If the control or adjustment has not been labeled with a descriptive nomenclature, the reference designation for the control shall be added.

3.6.20.12 Test points. - Test points tied to connections between two functional entities shall be illustrated in the space between. They shall be shown as close to their functional location as space will permit. Untitled test points shall be identified by their reference designation. Test points shall be numerically arranged in a pattern or sequence. The arrangement may be either circuit or equipment oriented but shall be consistent throughout. Where feasible, the normal reading or display available at the test point shall be shown. Otherwise, it shall be fully described within the referencing text of the instruction book.

3.6.20.13 Photographs. - Appropriate photographs shall be provided to complement the technical description of the equipment. When not located adjacent to pertinent text or required to be located elsewhere, these photographs shall appear in this section. They shall include but not be limited to individual photographs of the front and back of each major assembly. When needed to support tests, photographs of the sides and tops shall also be provided. Individual photographs of printed circuit boards shall not be required when the boards are adequately illustrated by line drawings. Major assemblies with any dimension in excess of 24 inches shall be shown in a full-page photograph. Half-page or larger photographs shall be made with all access doors closed. Also, sufficient

Downloaded from http://www.everyspec.com

views (interior and exterior) of the individual major assemblies shall be provided to show all controls and all electrical and mechanical parts visible (without disassembly) from all viewpoints exterior to the equipment. Each visible electrical and mechanical part on each photograph shall be marked with the reference designation. Arrows drawn to indicate parts shall be shown white over dark and black over light portions of the photograph.

3.6.20.14 Continuous-tone illustrations. - Photographs shall be detailed and clearly defined, free of heavy shadows, distorted objects, cluttered foregrounds or backgrounds, and shall provide good contrast from white, middle tones, and black. Retouching shall be held to a minimum and shall allow the retention of tonal qualities when reproduced. Renderings shall be clear in detail and sharp in contrast of tones, with light and shadow in proper relation to a consistent light source. The background shall be white and shall extend the full width and depth of the artwork. Photographs and renderings shall be photographed through a 100-line screen at the final reproduction size. A photographic print of the completed illustration, including callouts, leader lines, indexes, etc., shall be mounted in position on a page containing text or marginal data.

3.6.20.15 Printed circuit board illustrations. - Printed circuit board (pcb) illustrations (figure 28-foldout) shall show a physical view of the board including both the circuit side, and the component side together with appropriate schematics. The illustration shall consist of either a pcb with the components mounted on it, photographed with the board back-lighted to cause the circuitry to show through; a pcb without components, photographed with the board back-lighted to cause the circuitry to show through and with the components superimposed by line drawing; or a pcb drawing with the circuitry shown screened and the components depicted by line drawing. The method selected shall be used consistently for all pcb illustrations shown in the manuscript. When components are drawn, they shall be in proportional size to the size of the board. There shall be no deviation permitted to achieve fit. Each component reference designator shall be shown. When space is not available on the board, the reference designators shall be shown by the use of leaders (arrows) pointing to the component and reference numbers contained in balloons keyed to a legend. The legend shall contain the number shown in the balloon, the reference designator, and the nomenclature of the component.

3.6.20.16 Callouts. - Callouts shall be placed directly on artwork when space permits. When sufficient space is not available, leader lines shall be used between the illustrated items and reference numbers or callouts surrounding the artwork. When reference numbers are used, they shall begin with the number "1" and progress serially in a clockwise direction around the illustration (see figure 29). The reference numbers shall directly relate to an index containing the item nomenclature or other desired data. Multiple-sheet illustrations using reference numbers shall be considered as a single figure and the reference numbering shall run sequentially from the first through the last sheet. Each new illustration

Downloaded from http://www.everyspec.com

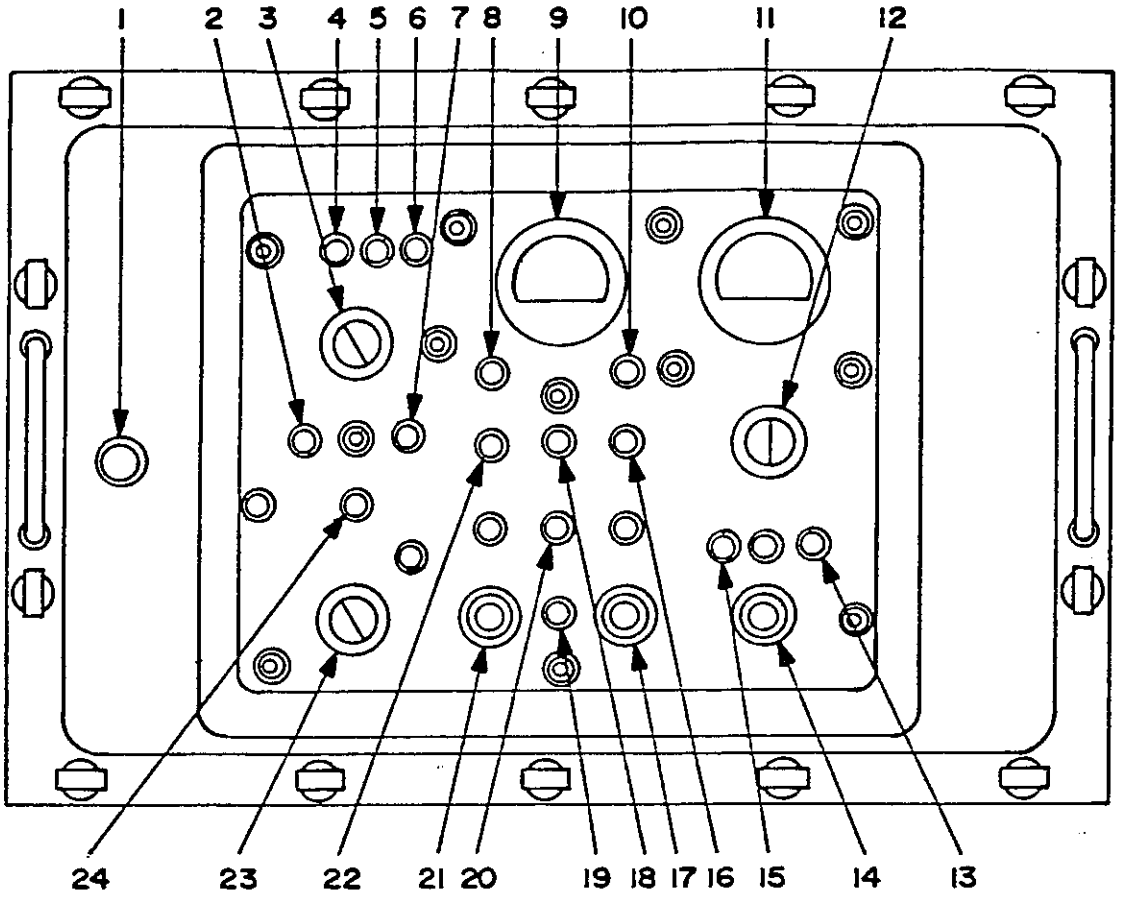

1. PHONE BUZZ buzzer
2. POWER INTERLOCKS lamp
3. POWER switch
4. STDBY lamp
5. READY lamp
6. TEST lamp
7. CW ILLUMINATOR INTERLOCKS lamp
8. RF POWER DRIVE lamp
9. RF POWER meter
10. RF POWER RADIATED lamp
11. DEVIATION meter
12. DEVIATION switch
13. FM NOISE ALARM lamp
14. NME RESET button
15. AM NOISE ALARM lamp
16. ILLUMINATOR STATUS NO GO lamp
17. RADIATE OFF button
18. ILLUMINATOR STATUS MARGINAL lamp
19. RADIATE lamp
20. HT MODE lamp
21. RADIATE ON button
22. ILLUMINATOR STATUS FAULT lamp
23. DIRECTOR LOUVERS switch
24. DIRECTOR LOUVERS OPEN lamp

Figure 29. Use of Leader Lines for Callouts

Downloaded from http://www.everyspec.com

containing a different figure number shall start callouts with the number "1," progressing serially until all items have been described. Each individual figure shall contain an index when reference numbers are used. Methods of presentation shall not be intermingled within an illustration even though the illustration consists of more than one page. It is preferred that the method of presentation selected be used consistently throughout the manuscript.

3.6.20.17 Leader lines. - Each leader line shall be in sharp contrast to other features of the illustration. Leader lines shall not cross or otherwise come into contact with each other. The lines shall cross as small a portion of essential illustration detail as possible. Where the callout description consists of two or more lines of lettering, the leader line shall originate at the first line of the callout.

3.6.20.18 Power distribution diagram. - Power distribution diagrams (figure 30-foldout) shall be provided to show the generation and distribution of power. The quantity of diagrams depends on equipment complexity and configuration. There shall be a minimum of one diagram showing power distribution within each major hardware item. All interconnections shall be shown. Cable numbers, pin numbers, and connector numbers (both plug and jack) shall be shown. Major hardware-mounted circuit elements shall be shown in schematic form. Power supplies and regulators, which are packaged as units or nomenclatured assemblies, and which have separate block schematics, shall be shown in block form. Relay contacts shall be shown in the deenergized condition. Grounds, commons, neutrals, and return lines must be shown. Input and output voltages and tolerances shall be indicated.

3.6.20.19 Wiring diagrams. - Wiring diagrams (figure 31-foldout) shall be provided to show the physical and electrical and electronic connections, color codes, and approximate relationship of connectors, terminals, etc. Wiring lists may be used in lieu of wiring diagrams only when these lists carry the data listed above.

3.6.20.20 Cabling diagrams. - Cabling diagrams showing all terminal and connector numbering and color coding of the interconnecting cables between major assemblies shall be provided. When the cables are not supplied with the equipment, the diagrams shall specify the required conductor sizes and types, voltage ratings, and terminations.

3.6.20.21 Mechanical drawings. - Mechanical drawings shall be provided as required. Those drawings of a size that precludes their integration within the text shall be located in this section. Where mechanical functions are dependent upon electrical and electronic interconnection, mechanical schematics (figure 32-foldout) shall be provided. The mechanical and electrical or electronic functions shall be thoroughly described in text.

3.6.20.22 Piping diagram. - Maintenance procedures relating to fluid cooling, air, gas, or hydraulic systems shall be supported with piping diagrams (figure 33-foldout) showing flow rate, temperature, pressure,

Downloaded from http://www.everyspec.com

and measurement or control devices. Direction of flow shall be indicated and shall, wherever possible, show the flow from left to right or from top to bottom of the diagram. Each piping diagram shall contain a legend of symbology as shown on figure 33.

4. QUALITY ASSURANCE PROVISIONS

4.1 Responsibility for inspection. - Unless otherwise specified in the contract or purchase order, the contractor is responsible for the performance of all inspection requirements as specified herein. Except as otherwise specified, the contractor may utilize his own or any other facilities suitable for the performance of the inspection requirements specified herein unless disapproved by the FAA. The FAA reserves the right to perform any of the inspections set forth in this specification where such inspections are deemed necessary to assure conformance to prescribed requirements.

4.1.1 Contractor inspection. - Material furnished in accordance with this specification shall be inspected by the supplier to assure conformance to the requirements specified herein and in the appropriate contract or purchase order.

4.1.2 Inspection of artwork. - The contractor's procedures for inspection of art shall be adequate to ensure that proper line weights are provided in the printed copy and that half-tones of photographs and renderings provide proper shading and delineation of detail. Lettering on artwork shall be checked for accuracy and for compliance with size requirements of this specification. The contractor shall provide proper identification on each piece of original artwork to prevent loss or improper location within the manuscript.

4.1.3 Proofreading. - The contractor shall ensure that reproducible (camera-ready) copy is free of errors and that all type is clear and legible. The contractor's quality check procedures shall contain provisions for ensuring that type styles are within the requirements of this specification and that sizes and weights are correct.

4.1.4 Completeness and continuity. - The contractor shall ensure that the manuscript is complete, including appropriate charts, tables, and illustrations, and that pages are numbered in the correct sequence. The contractor shall verify that all changes required by the FAA have been incorporated. Manuscript copy shall be prepared so that the approximate locations of insert, or incidental illustrations shall be clearly evident. This shall be done by typing in all capital letters, the legend: INSERT FIGURE _____, followed by its caption, across the manuscript page. The typescript shall be spaced sufficiently between lines at this point, so that the insert instruction is clearly seen and does not appear to be a part of the text.

4.1.5 Assembly instructions. - The contractor shall provide instructions for final assembly of the manuscript. A mockup of the complete manuscript shall be submitted with the reproducible (camera-ready) copy as a guide to proper assembly.

Downloaded from http://www.everyspec.com

4.2 Quality program requirements. - The contractor shall provide and maintain a written quality program acceptable to the FAA. The program shall be delineated in sufficient depth to assure that adequate and accurate data and procedures are presented in the manuscripts, and that materials being prepared and furnished in support of manuscripts are in accordance with the requirements of this specification. Principles of operation and system or equipment description shall be validated against engineering source data. Operating and maintenance procedures, including checkout, calibration, alignment, removal and replacement instructions, and associated checklists shall be validated against the system or equipment. The quality program shall, as a minimum, take into account such areas of concern as the following.

4.2.1 Personnel. - The authority, function, and duties of those responsible for preparation and inspection of manuscripts shall be clearly defined. The contractor shall ensure that only technically qualified personnel are used for the preparation and inspection of manuscripts. Personnel qualifications will be verified by Government review of resumes submitted with the contract bid.

4.2.2 Coordination. - The manuscript preparation personnel shall maintain coordination with design and production activities to assure that the latest technical data, operating and maintenance procedures, and drawings are used in the preparation of manuscripts and to ensure that revisions to the manuscripts are made concurrent with revisions to equipment design.

4.3 Validation. - The contractor shall validate the instruction book manuscript to assure that it accurately and adequately depicts the equipment and that the procedures can be performed by personnel of the level for which the manuscript is written. This validation shall include the following tasks as a minimum.

a. Conformance of the manuscript to applicable requirements of the contract. This review shall include editorial review of the manuscript.

b. Essentiality of illustrations and photographs used.

c. Existence and adequacy of references cited in the text.

d. Actual performance by contractor personnel of all installation, integration, checkout, calibration, and alignment procedures.

e. Actual performance by contractor personnel of all maintenance procedures such as disassembly, cleaning, inspection, testing, repair replacement, reassembly, troubleshooting, and preventive maintenance checks and procedures.

f. The requirement for all tools, test equipment and repair parts.

Downloaded from http://www.everyspec.com

4.4 Validation of changes. - The contractor shall validate subsequent manuscript changes or revisions resulting from contract modifications, design changes, or established manuscript deficiencies revealed during the contractor's responsibility period.

4.5 Verification. - To assure that the contractor has fulfilled all requirements of the validation process, the government reserves the right to witness any contractor validation activities. Verification may also include the actual performance, by government personnel, of any instruction contained in the manuscript.

4.6 Government inspection. - Material furnished in accordance with this specification shall be subject to inspection and approval by the Government or its appointed representative. The Government shall perform a final review prior to acceptance of the completed reproducible (camera-ready) copy and original artwork to ensure that the technical requirements of this specification have been met. The Government may assign nongovernment review teams for this activity without prior notification to the contractor.

5. PREPARATION FOR DELIVERY

5.1 Packaging of reproducible (camera-ready) copy. - Reproducible (camera-ready) copy shall be packed flat and double-packaged. Interior containers shall be of a material that is waterproof and free of any chemical substance that would discolor or otherwise damage the copy. The exterior package shall be a standard commercial carton of sufficient strength to protect the copy against shipping damage. The outer container shall identify the contents as being reproducible (camera-ready) copy for a specific instruction book and shall be shipped to the destination specified in the contract.

5.2 Packaging of original artwork. - Original artwork shall be packed and packaged in a manner similar to that specified in 5.1 for reproducible (camera-ready) copy. The outer container(s) shall identify the contents as being original artwork for a specific instruction book and shall be shipped to the destination specified in the contract.

5.3 Printing instructions. - This paragraph provides instructions to Federal Aviation Administration, Department of Transportation, and Government Printing Office personnel on the printing, binding, and packaging of FAA Equipment Instruction Books to be prepared in accordance with this specification. Requests for procurement and printing of equipment instruction books shall be submitted in accordance with the latest editions of Order 1320.37, Contractor Developed Equipment Instruction Books, and Order 1720.15, Printing, Binding, Distribution and Editorial Services Request.

5.3.1 Page size. - The basic page size shall be 8-1/2 inches wide by 11 inches high. Foldout sheets shall be 11 inches high with a maximum overall width of 24 inches. Only two folds are permitted. Actual book size after final trimming shall be no less than 8-1/4 inches wide by 10-3/4 inches high. Troubleshooting support data to be bound separately shall be contained in a volume 11 inches high and 17 inches wide.

Downloaded from http://www.everyspec.com

5.3.2 Paper stock. - Front and back covers shall be made of chemical wood board, tan, JCP Q50, substance 200, basis 1,000 sheets 22-½ by 28-1/2 inches. Paper stock for pages other than the covers shall be as follows:

Page Class	Paper Description
(a) Basic pages	Book paper, offset, white, JCP A60 substance 100, basis 1,000 sheets 25 by 38 inches.
(b) Foldouts	High wet-strength lithographic map, JCP E20, substance 48, basis 1,000 sheets 17 by 22 inches.

5.3.3 Negatives. - All negatives must be film; paper negatives are not acceptable. Negatives shall be removed from the flats (with all material used in stripping to the flats cleanly removed) and gathered in page sequence. Films stripped together to form a page unit must not be separated. All negatives must be returned flat, not folded or rolled, to the requesting office.

5.3.4 Printing. - Ink shall be standard black. Printing shall be head-to-head except for foldouts and 11- by 17-inch illustrations which shall be printed on one side only. Back covers are blank on both sides.

5.3.5 Drilling. - The book shall be drilled with 5 round holes 3/8 inch in diameter, 2-1/8 inch center to center. The center of each hole shall be 7/16 inch from the left-hand side (binding edge). The center hole shall be located at the mid-point of the vertical dimension of the page.

5.4 Binding. - General requirements for binding are:

(a) Foldouts shall be folded in such a manner that the figure number, page number, and title are readable without having to unfold the page.

(b) The book shall be trimmed on 4 sides and wrapped individually by heat shrink-film process, except in cases where the book is less than 65 pages, in which case it shall be stapled in the upper left-hand corner.

(c) Insert brick guard (spacers) if necessary to make the book approximately the same thickness at the binding and opening edges.

(d) Insert ten (10) copies of figure 6 of this specification at the back of each equipment instruction book. These pages shall be attached so they can easily be removed and sent to the program manager in Washington, DC, with suggested improvements or changes to the pertinent equipment instruction book.

Downloaded from http://www.everyspec.com

5.5 Review and acceptance of printed books. - The Office of Primary Interest shall be responsible for review of instruction books printed under this specification. They shall recommend acceptance or rejection of the document to the Government Printing Office through the Office of Management Systems (AMS-100). The Government Printing Office will make the final decision on all recommendations for rejection of the document.

5.6 Packaging of books for delivery. - For bulk shipments, books shall be packed solidly in new corrugated or solid fiberboard containers meeting current Federal Specifications PPP-B-636s. Packed cartons shall weigh no more than 40 pounds each. Mail shipments of single or multiple copies weighing up to 10 pounds shall be wrapped so as to assure delivery in an undamaged condition. Mail shipments weighing 10 to 40 pounds may be wrapped or packed in shipping containers as required to assure delivery in an undamaged condition. Mailing lists shall be provided by the Contracting Officer.

* * * * *

FOLDOUT FIGURES, PAGES 75 TO 102

Downloaded from http://www.everyspec.com

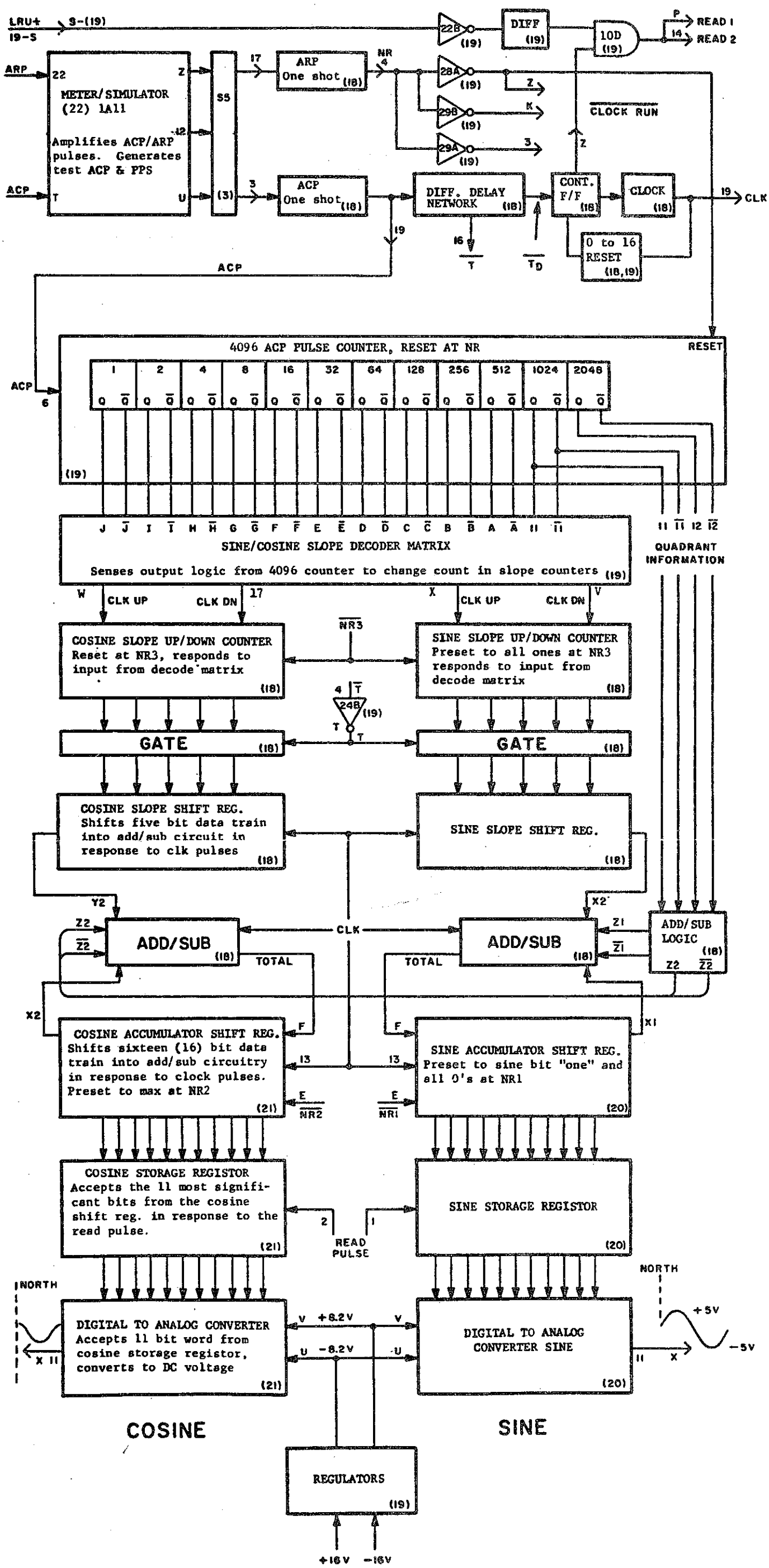

Figure 11. Functional Flow Diagram

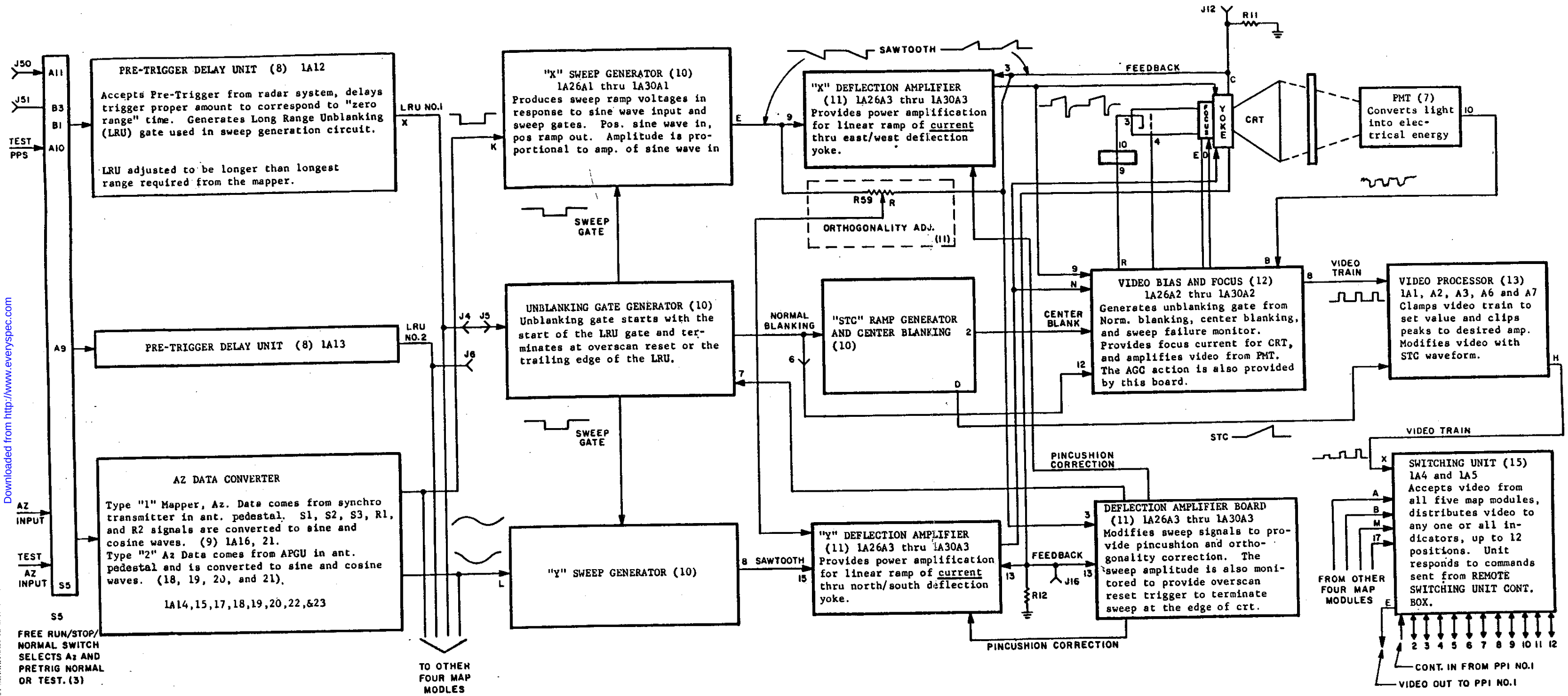

Figure 12. Signal Flow Diagram

Downloaded from http://www.everyspec.com

Downloaded from http://www.everyspec.com

INTEGRATED CIRCUITS USED IN THE UON 4					
I C NO	ELEMENT	MOTOROLA PART NO.	TEXAS INSTRUMENTS PART NO.	FAIRCHILD PART NO.	SIGNETICS PART NO.
1	HEX INVERTER	MC937L	SN5405J	U6A993759X	--
2	QUAD 2 INPUT NAND GATE	MC946L	SN5400J	U6A994659X	--
3	TRIPLE 3-INPUT NAND GATE	MC962L	SN5410J	U6A996259X	--
4	EXPANDABLE-DUAL 4-INPUT GATE	MC932L	SN5440J	U6A993259X	--
5	EXPANDABLE DUAL 4-INPUT POWER GATE	MC944L	SN5440J	U6A996459X	--
6	EXPANDABLE DUAL 4-INPUT GATE	MC961L	SN5420J	U6A996159X	--
7	DUAL 4-INPUT EXPANDER	MC933L	SN5460J	U6A993359X	--
8	CLOCKED FLIP-FLOP	MC945L	--	U6A996559X	--
9	CLOCKED FLIP-FLOP	MC931L	--	U6A993159X	--
10	CLOCKED FLIP-FLOP	MC852L	--	U6A909959X	--
11	MONOSTABLE MULTIVIBRATOR	MC951L	SN54121N	U6A995159X	--
12	RETRIGGERABLE MONOSTABLE MULTIVIBRATOR	--	SN54122N	U6A960059X	--
13	PRESETTABLE BINARY COUNTER	--	--	--	8293A
14	PRESETTABLE BINARY COUNTER	--	--	--	8280A
15	4-BIT BINARY FULL ADDER	--	SN74LS83N	--	--
16	DIVIDE BY 12 COUNTER	--	--	--	8288A
17	4-BIT BINARY COUNTER	--	SN5493N	U6A939359X	--
18	OPTICALLY COUPLED ISOLATOR	--	TIL-111	--	--
19	DUAL PERIPHERAL DRIVER	--	SN75450N	--	--

COUNT PINS COUNTER-CLOCKWISE FROM INDEX

IC'S MAY USE ONE OR MORE OF THE FOLLOWING INDEXING METHODS:
A. KEY INDEX
B. DOT INDEX
C. SMALL PIN 1

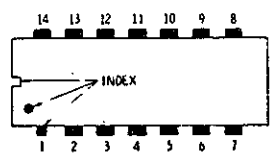

TOP VIEW OF I.C.

PIN 7 OF ALL CONFIGURATION IS THE COMMON LEAD. (EXCEPT AS NOTED)

PIN 14 OF ALL CONFIGURATIONS IS THE POWER LEAD (+5V). (EXCEPT AS NOTED)

IC NO. 1 HEX INVERTER

THE ELEMENT CONSISTS OF SIX INVERTER CIRCUITS. THE ELEMENTS MAY BE CROSS-COUPLED TO FORM A BISTABLE MULTIVIBRATOR OR THE OUTPUTS MAY BE CONNECTED IN PARALLEL TO PERFORM THE WIRED "OR" FUNCTION.

INPUT	OUTPUT
L	H
H	L

THEY MAY BE SHOWN IN EITHER OF THE FOLLOWING CONFIGURATIONS

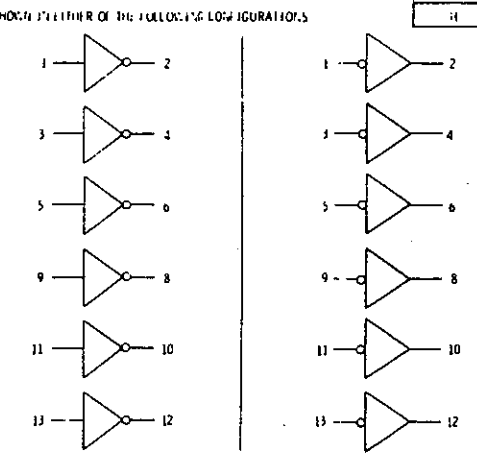

IC NO. 4 EXPANDABLE - DUAL 4-INPUT GATE

THE ELEMENT CONSISTS OF TWO EXPANDABLE, 4 INPUT INVERTING DRIVERS. THEY ARE DESIGNED ESPECIALLY FOR DRIVING LARGE CAPACITIVE LOADS AT HIGH SPEEDS.

THEY MAY BE SHOWN IN EITHER OF THE FOLLOWING CONFIGURATIONS:

USED AS "AND" FUNCTION WITH STATE INDICATOR

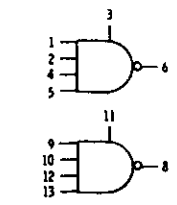

WHEN ALL INPUTS ARE HIGH, (INCLUDING EXPANDER), OUTPUT WILL BE LOW

USED AS "OR" FUNCTION WITH STATE INDICATORS

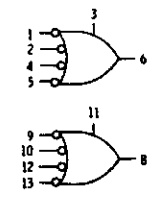

EXPANDER INPUT NOT USED IN "OR" CONFIGURATION

IF ANY INPUT IS LOW OUTPUT WILL BE HIGH

INPUTS				EXPAND.	OUTPUT
X	X	X	X	L	H
L	L	L	L	L	H
L	L	L	H	H	H
L	L	H	L	H	H
L	L	H	H	H	H
L	H	L	L	H	H
L	H	L	H	H	H
L	H	H	L	H	H
L	H	H	H	H	H
H	L	L	L	H	H
H	L	L	H	H	H
H	L	H	L	H	H
H	L	H	H	H	H
H	H	L	L	H	H
H	H	L	H	H	H
H	H	H	L	H	H
H	H	H	H	H	L

X = INPUT LEVEL HAS NO EFFECT ON OUTPUT

IC NO. 5 EXPANDABLE - DUAL 4-INPUT POWER GATE

THE ELEMENT CONSISTS OF TWO EXPANDABLE, 4 INPUT INVERTING DRIVERS. THEY ARE DESIGNED ESPECIALLY FOR DRIVING LAMPS.

THEY MAY BE SHOWN IN EITHER OF THE FOLLOWING CONFIGURATIONS

USED AS "AND" FUNCTION WITH STATE INDICATOR

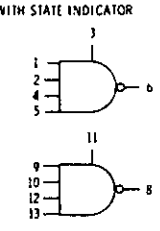

USED AS "OR" FUNCTION WITH STATE INDICATORS

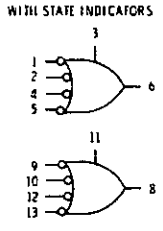

OPERATION AND TRUTH TABLE IS IDENTICAL TO EXPANDABLE - DUAL 4-INPUT GATE (IC NO. 4)

IC NO. 6 EXPANDABLE-DUAL 4-INPUT GATE

THE ELEMENT CONSISTS OF TWO EXPANDABLE 4-INPUT GATE CIRCUITS. THE ELEMENTS MAY BE CROSS-COUPLED TO FORM A BISTABLE MULTIVIBRATOR OR THE OUTPUTS MAY BE CONNECTED IN PARALLEL TO PERFORM THE WIRED "OR" FUNCTION.

THEY MAY BE SHOWN IN EITHER OF THE FOLLOWING CONFIGURATIONS:

USED AS "AND" FUNCTION WITH STATE INDICATOR

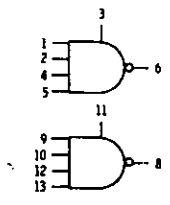

USED AS "OR" FUNCTION WITH STATE INDICATORS

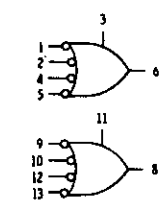

OPERATION AND TRUTH TABLE IS IDENTICAL TO EXPANDABLE - DUAL 4-INPUT GATE (IC NO. 4)

IC NO. 7 DUAL 4-INPUT EXPANDER

THE ELEMENT CONSISTS OF TWO INDEPENDENT DIODE NETWORKS WITH CHARACTERISTICS MATCHED TO THE INPUT DIODES OF GATE AND BUFFER ELEMENTS IN THIS LOGIC FAMILY.

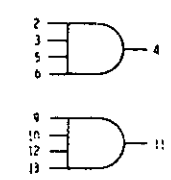

WHEN ALL INPUTS ARE HIGH, OUTPUT IS HIGH

INPUTS				OUTPUT
L	L	L	L	L
L	L	L	H	L
L	L	H	L	L
L	L	H	H	L
L	H	L	L	L
L	H	L	H	L
L	H	H	L	L
L	H	H	H	L
H	L	L	L	L
H	L	L	H	L
H	L	H	L	L
H	L	H	H	L
H	H	L	L	L
H	H	L	H	L
H	H	H	L	L
H	H	H	H	H

IC NO. 8 CLOCKED FLIP-FLOP

THESE CLOCKED FLIP-FLOPS CONSISTS OF TWO DIRECTLY COUPLED FLIP-FLOPS, OPERATING ON THE "MASTER-SLAVE" PRINCIPLE. THE INPUT INFORMATION IS STORED IN THE "MASTER" FLIP-FLOP WHEN THE CLOCK VOLTAGE IS HIGH, AND TRANSFERRED TO THE SLAVE WHEN THE CLOCK VOLTAGE IS LOW.

THE CLOCKED FLIP-FLOPS CAN BE OPERATED IN EITHER THE R-S OR J-K MODE. FOR J-K OPERATION THE "1" OUTPUT IS CONNECTED TO A CLEAR INPUT, AND THE "0" OUTPUT IS CONNECTED TO A SET INPUT.

ASYNCHRONOUS INPUTS, DIRECT SET (S) AND DIRECT CLEAR (C), OVERRIDE THE SYNCHRONOUS INPUTS. NO MATTER WHAT OTHER INPUTS ARE APPLIED TO THE FLIP-FLOP, THE DIRECT SET AND CLEAR INPUTS PREVAIL.
THE OUTPUTS ARE BUFFERED, THEREBY REDUCING THE POSSIBILITY OF CIRCUIT DISTURBANCES FROM EXTERNAL LINE NOISE.

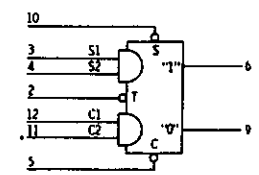

ASYNCHRONOUS TRUTH TABLE			
S	C	"1" SIDE	"0" SIDE
1	1	NC	NC
0	1	1	0
1	0	0	1
0	0	1	1

SYNCHRONOUS TRUTH TABLE				
tn				tn + 1
S_1	S_2	C_1	C_2	"1" OUTPUT SIDE OF F.F
0	X	0	X	SAME AS "1" AT TIME tn
0	X	X	0	SAME AS "1" AT TIME tn
X	0	0	X	SAME AS "1" AT TIME tn
X	0	X	0	SAME AS "1" AT TIME tn
0	X	1	1	0
X	0	1	1	0
1	1	0	X	1
1	1	X	0	1
1	1	1	1	U

tn = PREVIOUS CLOCK PULSE
tn+1 = NEXT CLOCK PULSE
NC = NO CHANGE
X = STATE OF THE INPUT DOES NOT AFFECT STATE OF THE CIRCUIT
0 = LOW STATE (MORE NEGATIVE)
1 = HIGH STATE (MORE POSITIVE)
U = INDETERMINATE STATE (NOT ALLOWED IF WIRED AS J-K)

SYMBOLS USED IN THIS BOOK

R-S

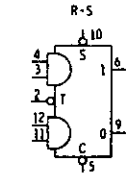

J-K

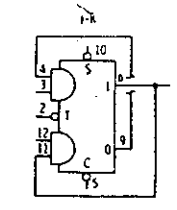

IC NO. 9 CLOCKED FLIP-FLOP

IDENTICAL TO CLOCKED FLIP-FLOP (IC NO. 8) EXCEPT MAY BE SET OR CLEARED FROM THE OUTPUT SIDE OF THE FLIP-FLOP.
GROUNDING THE "0" OUTPUT WILL SET THE FLIP-FLOP ("1" OUTPUT HIGH).
GROUNDING THE "1" OUTPUT WILL CLEAR THE FLIP-FLOP ("0" OUTPUT HIGH).

Figure 15. Integrated Circuit Data Chart

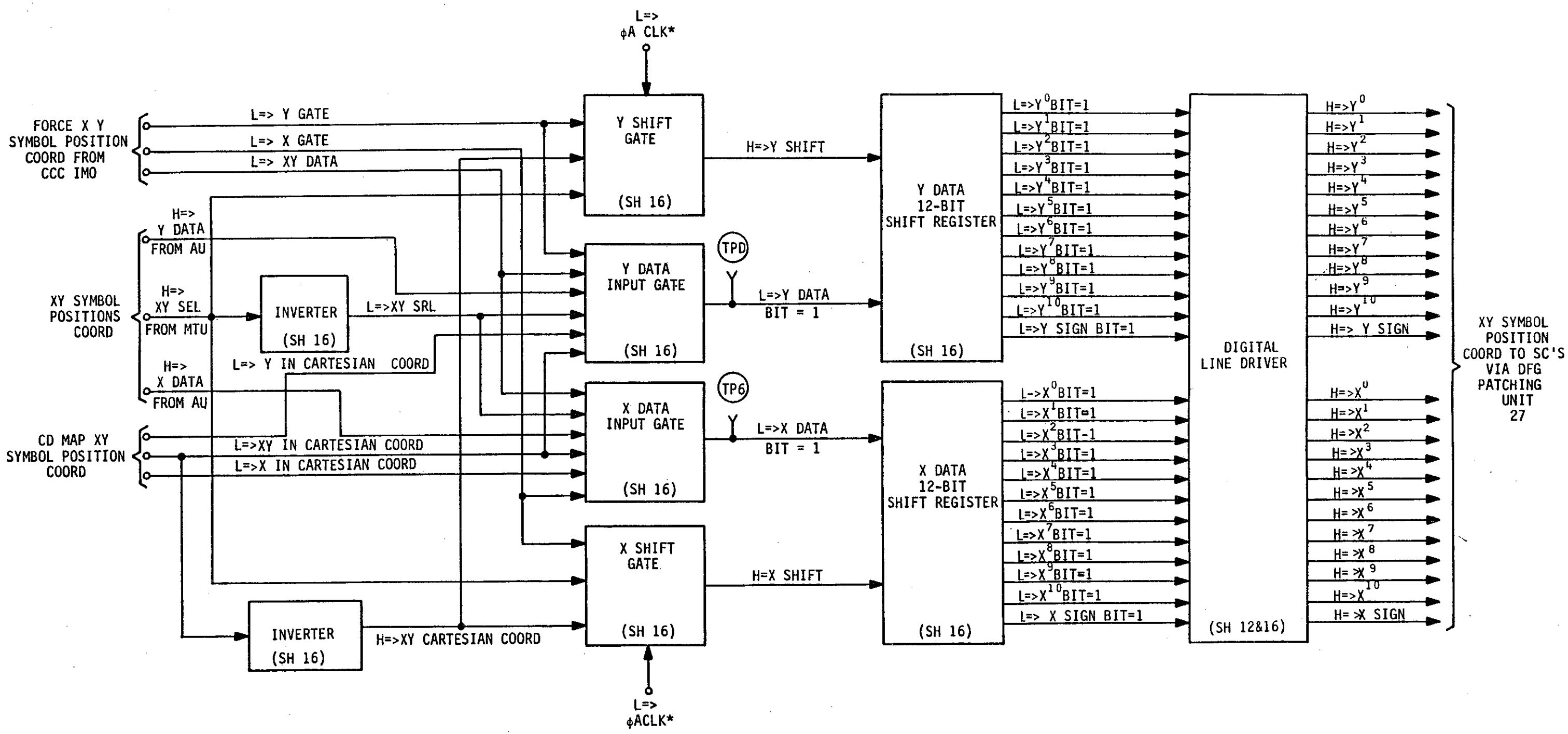

Figure 17. Intermediate Logic Diagram

Downloaded from http://www.everyspec.com

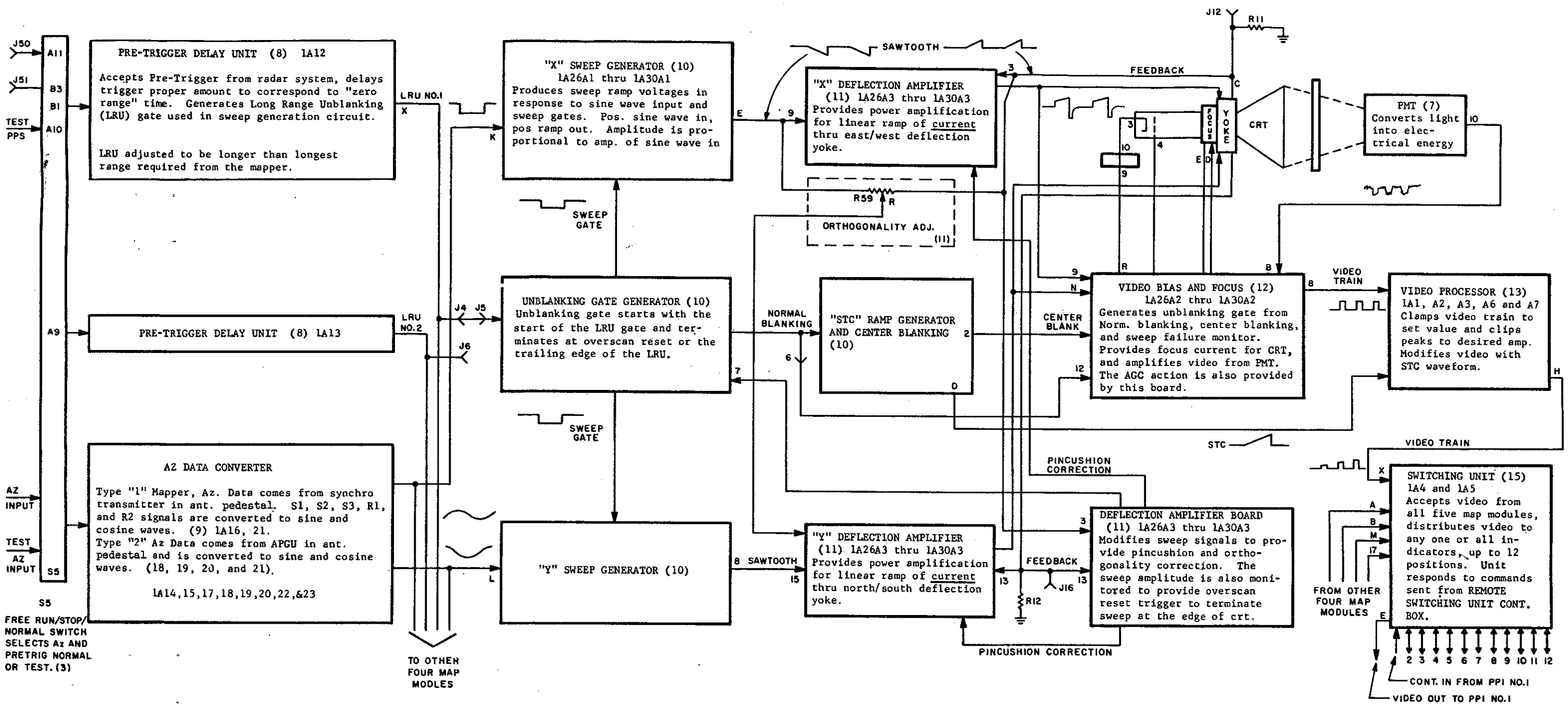

Figure 21. Signal Flow Diagram

Downloaded from http://www.everyspec.com

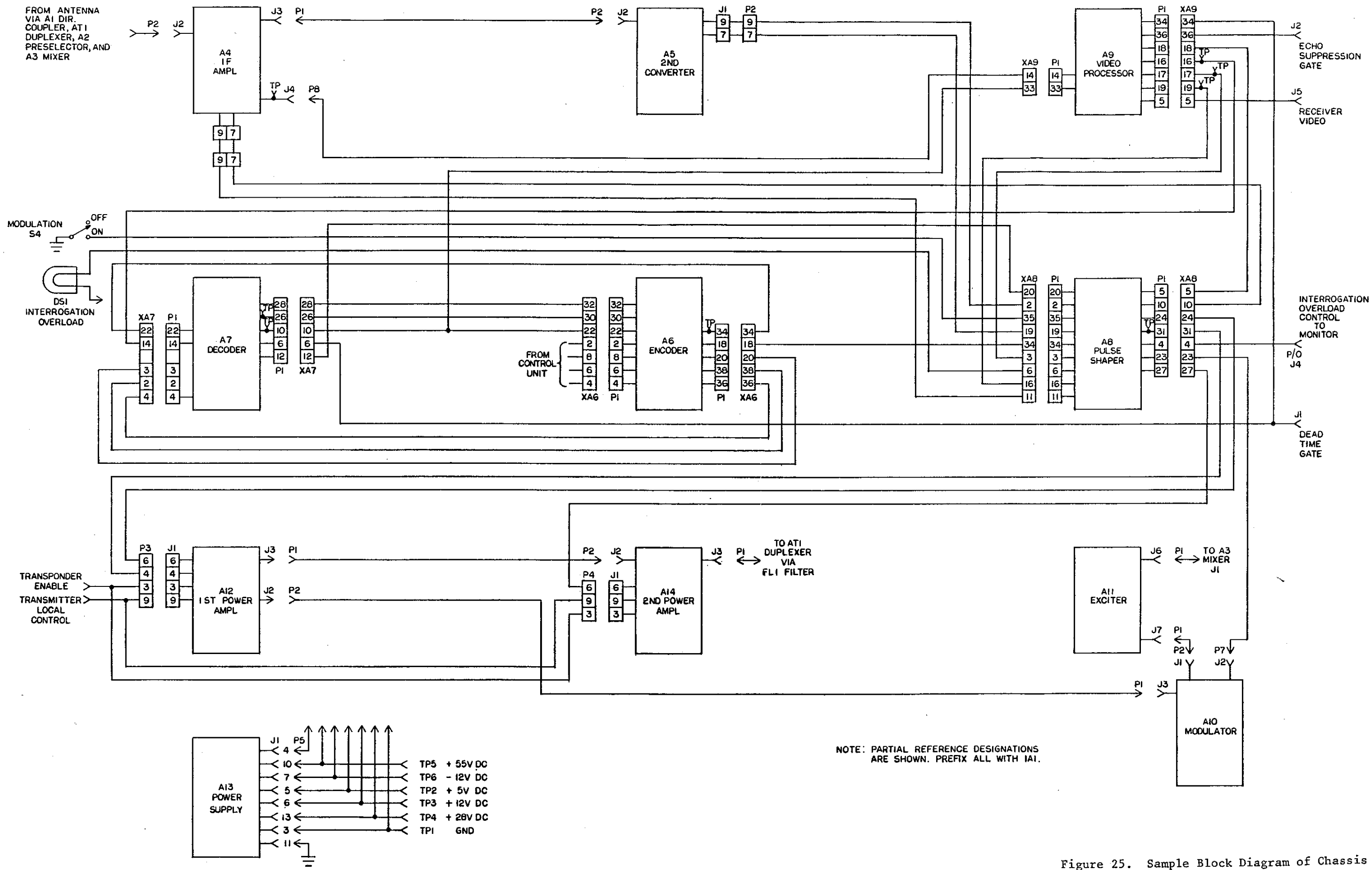

Figure 25. Sample Block Diagram of Chassis with Plug-in Units

Downloaded from http://www.everyspec.com

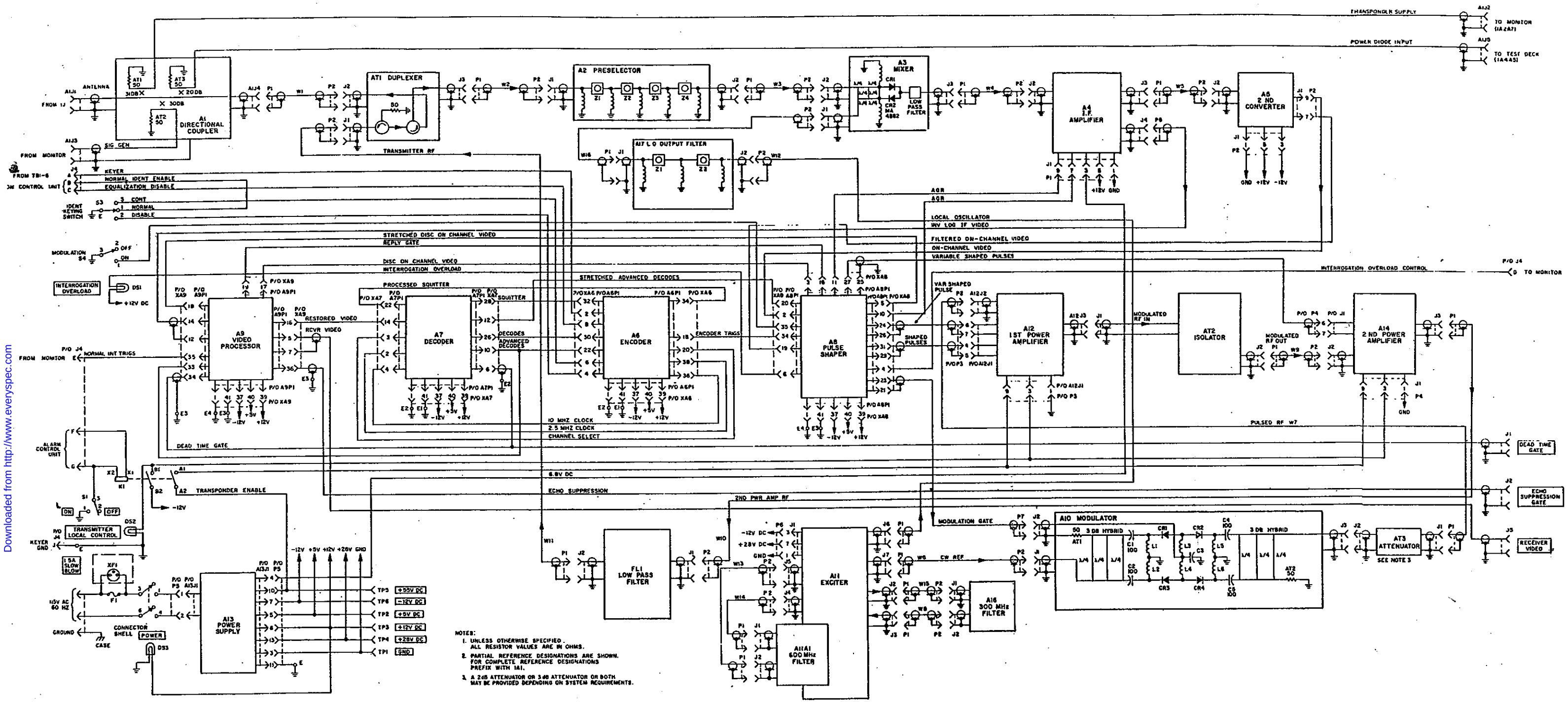

Figure 26. Sample Chassis Schematic Diagram

Downloaded from http://www.everyspec.com

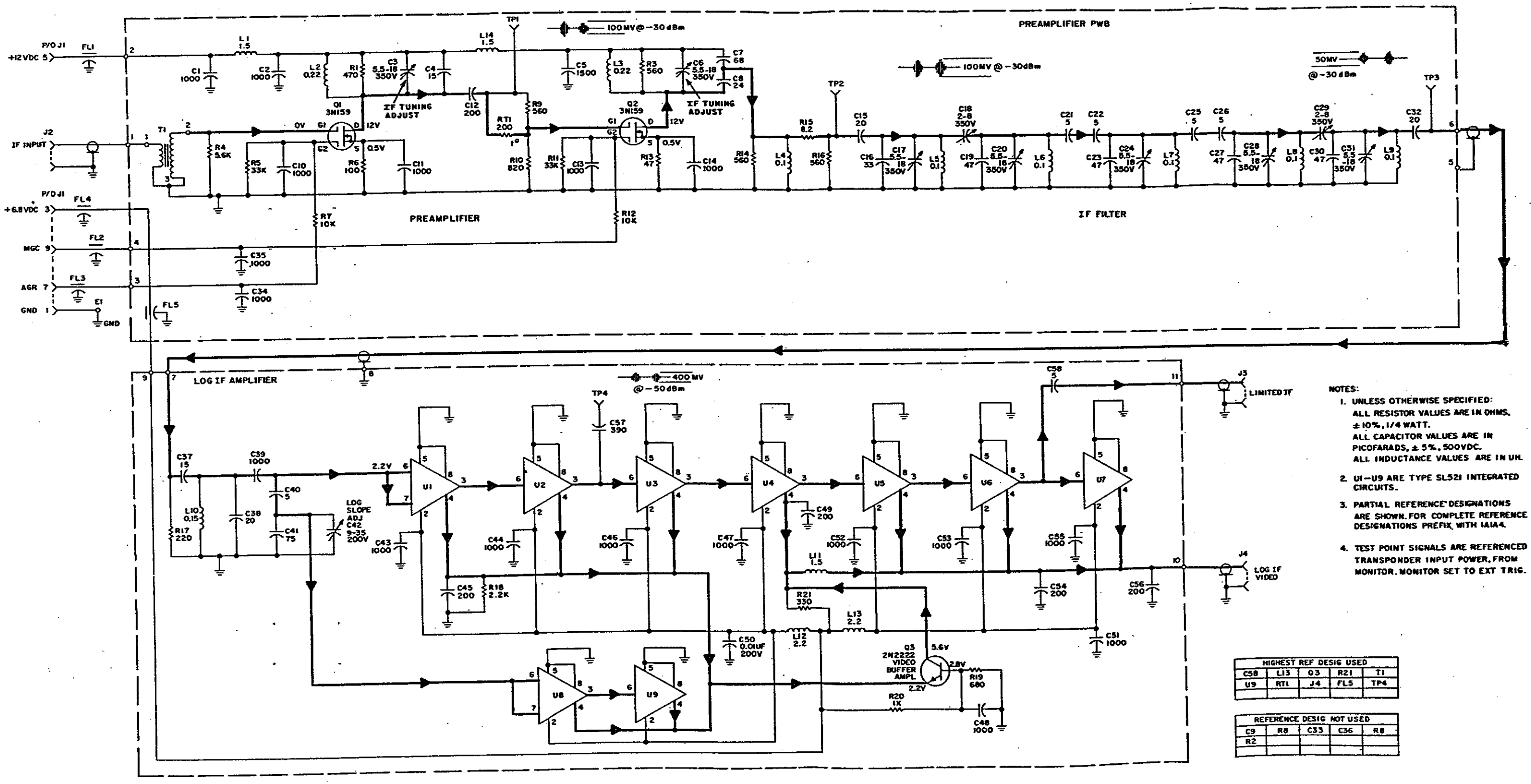

NOTES:

1. UNLESS OTHERWISE SPECIFIED:
   ALL RESISTOR VALUES ARE IN OHMS, ±10%, 1/4 WATT.
   ALL CAPACITOR VALUES ARE IN PICOFARADS, ±5%, 500VDC.
   ALL INDUCTANCE VALUES ARE IN UH.
2. U1–U9 ARE TYPE SL521 INTEGRATED CIRCUITS.
3. PARTIAL REFERENCE DESIGNATIONS ARE SHOWN. FOR COMPLETE REFERENCE DESIGNATIONS PREFIX WITH IA1A4.
4. TEST POINT SIGNALS ARE REFERENCED TO TRANSPONDER INPUT POWER, FROM MONITOR. MONITOR SET TO EXT TRIG.

HIGHEST REF DESIG USED				
C58	L13	Q3	R21	T1
U9	RT1	J4	FL5	TP4

REFERENCE DESIG NOT USED				
C9	R8	C33	C36	R8
R2				

Figure 27. Sample Schematic Breakdown to Component Level Showing IF Amplifier

Downloaded from http://www.everyspec.com

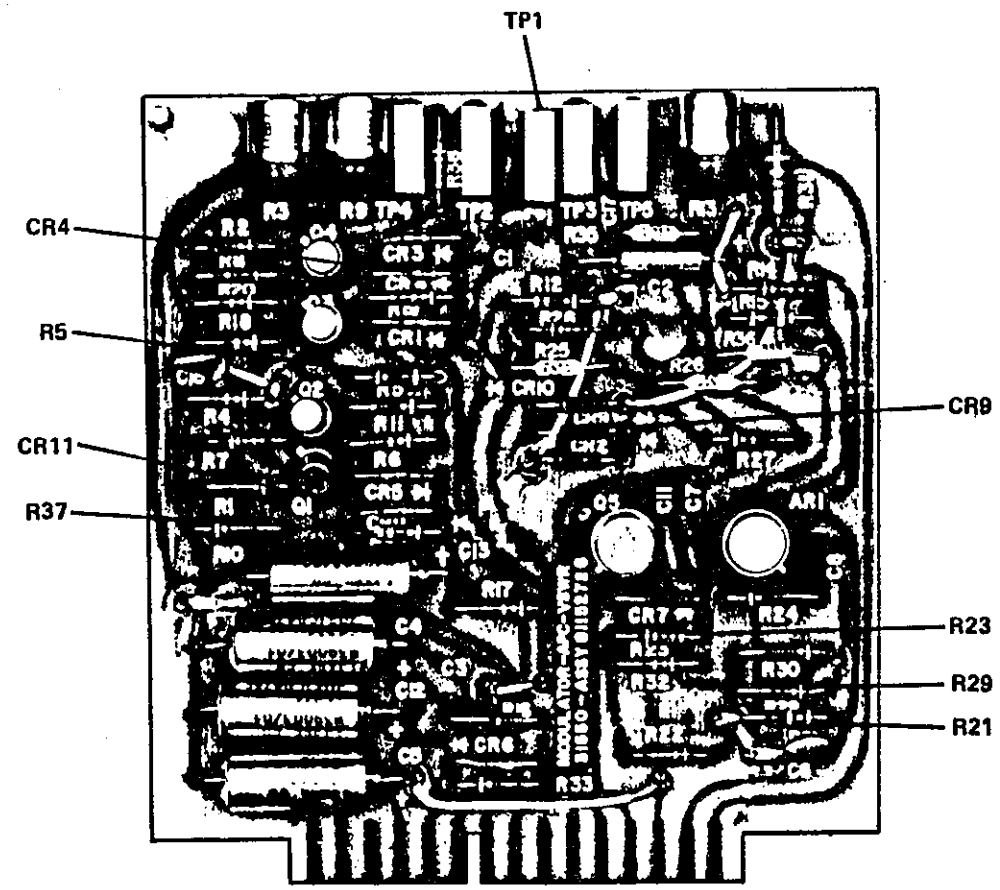

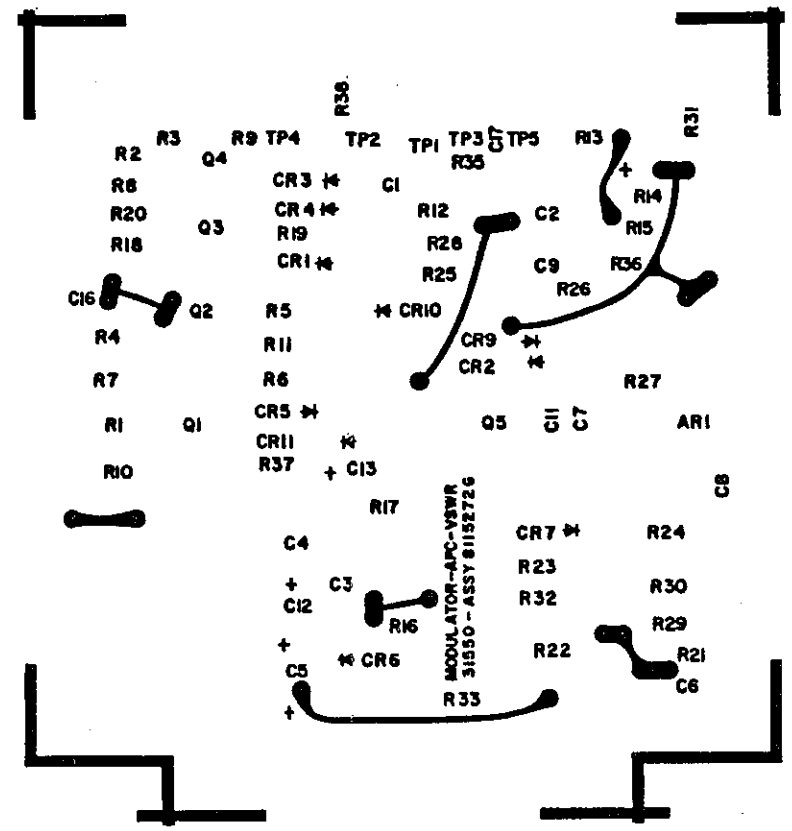

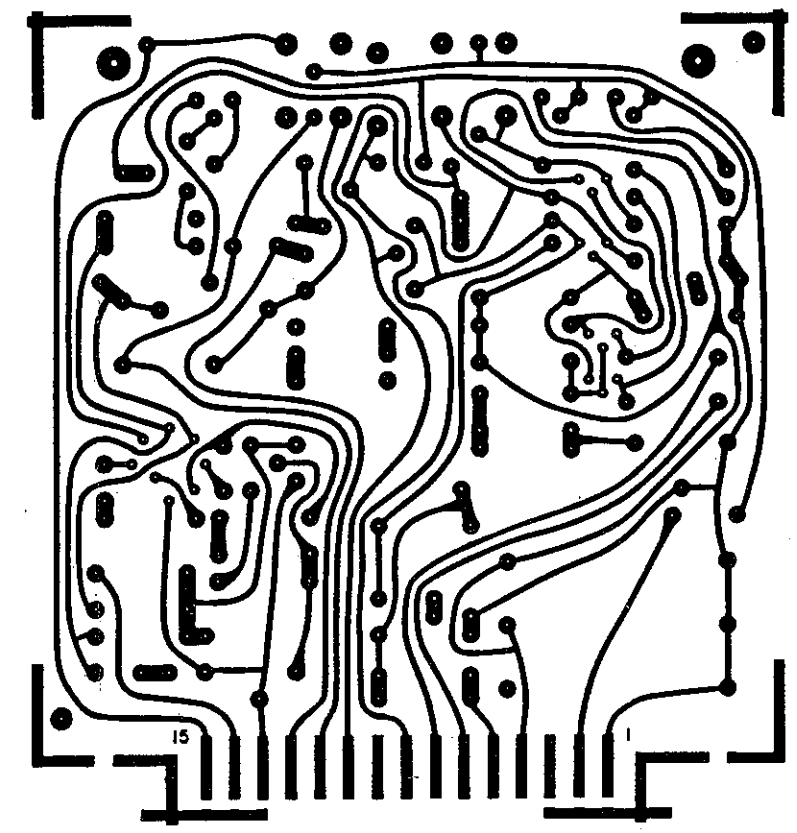

Figure 28. Printed Circuit Board

Downloaded from http://www.everyspec.com

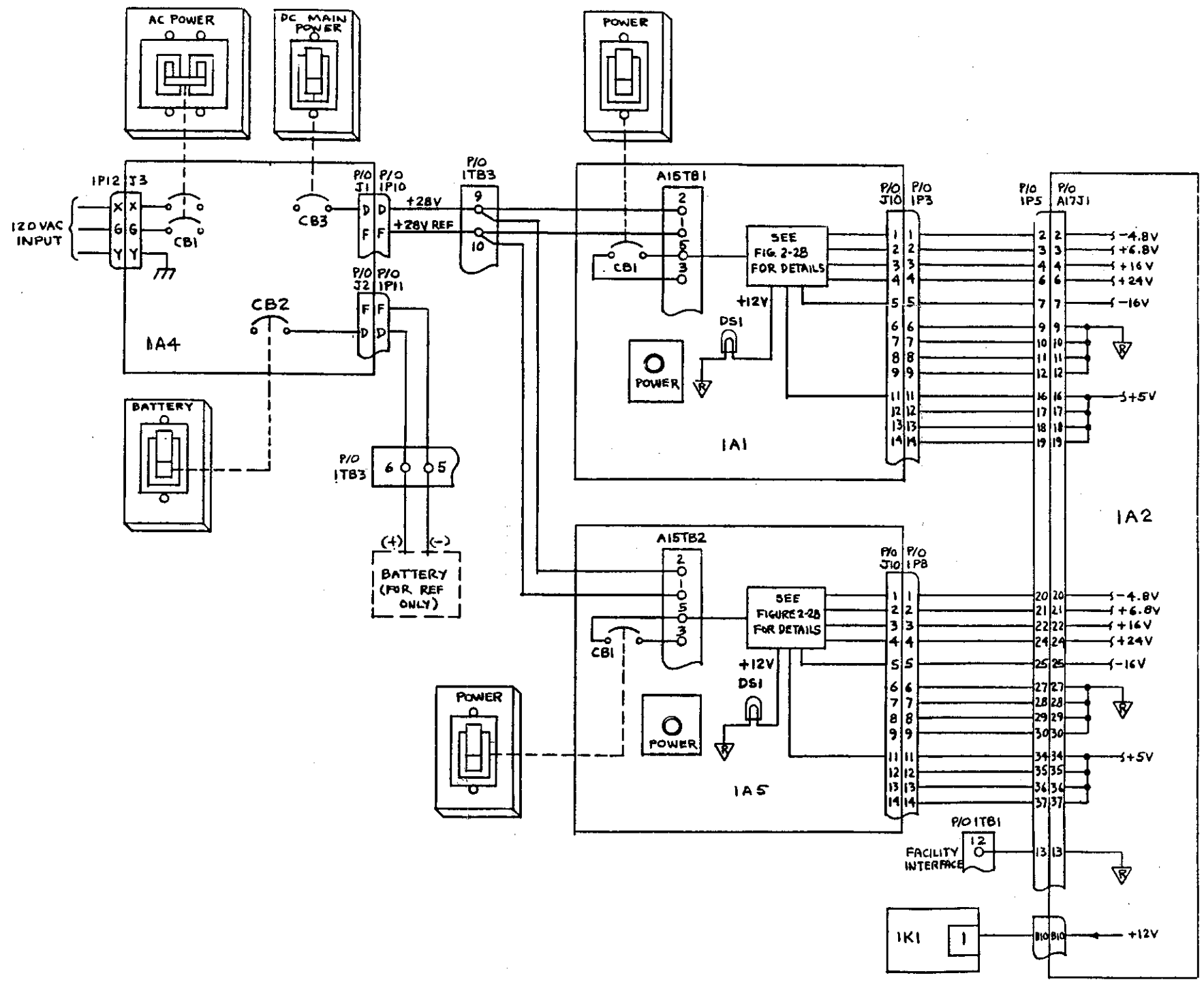

Figure 30. Power Distribution Diagram (sheet 1 of 2)

Downloaded from http://www.everyspec.com

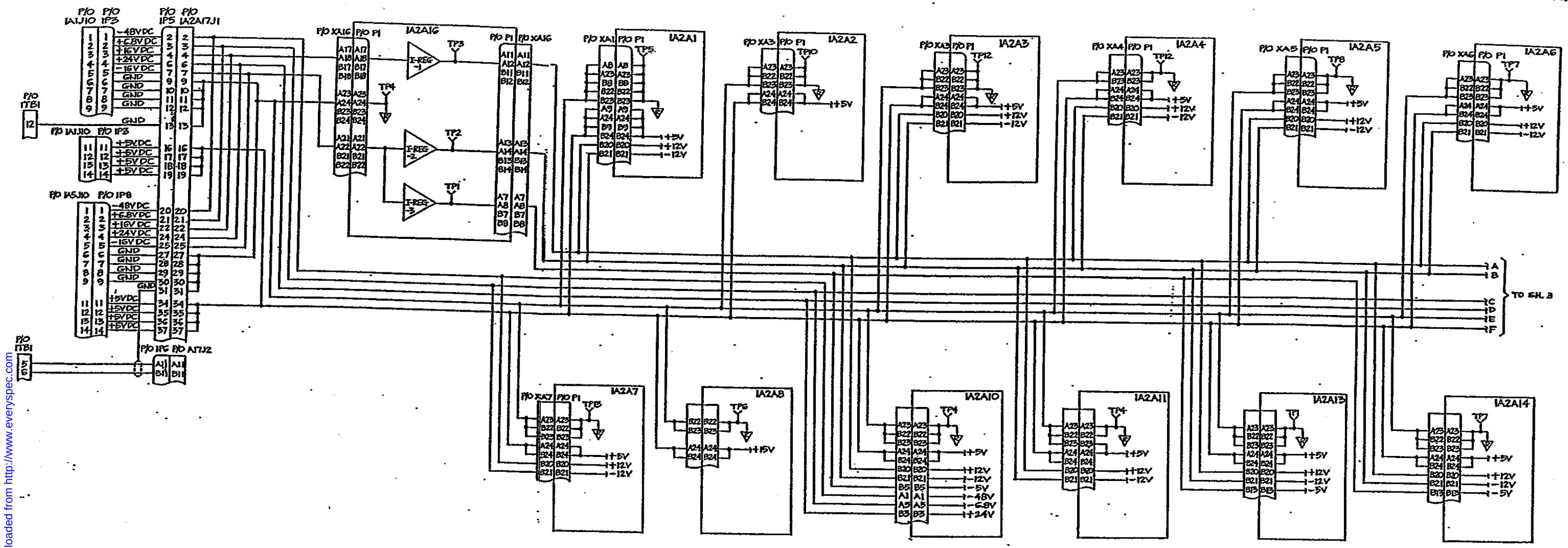

Figure 30. Power Distribution Diagram (sheet 2 of 2)

Downloaded from http://www.everyspec.com

Downloaded from http://www.everyspec.com

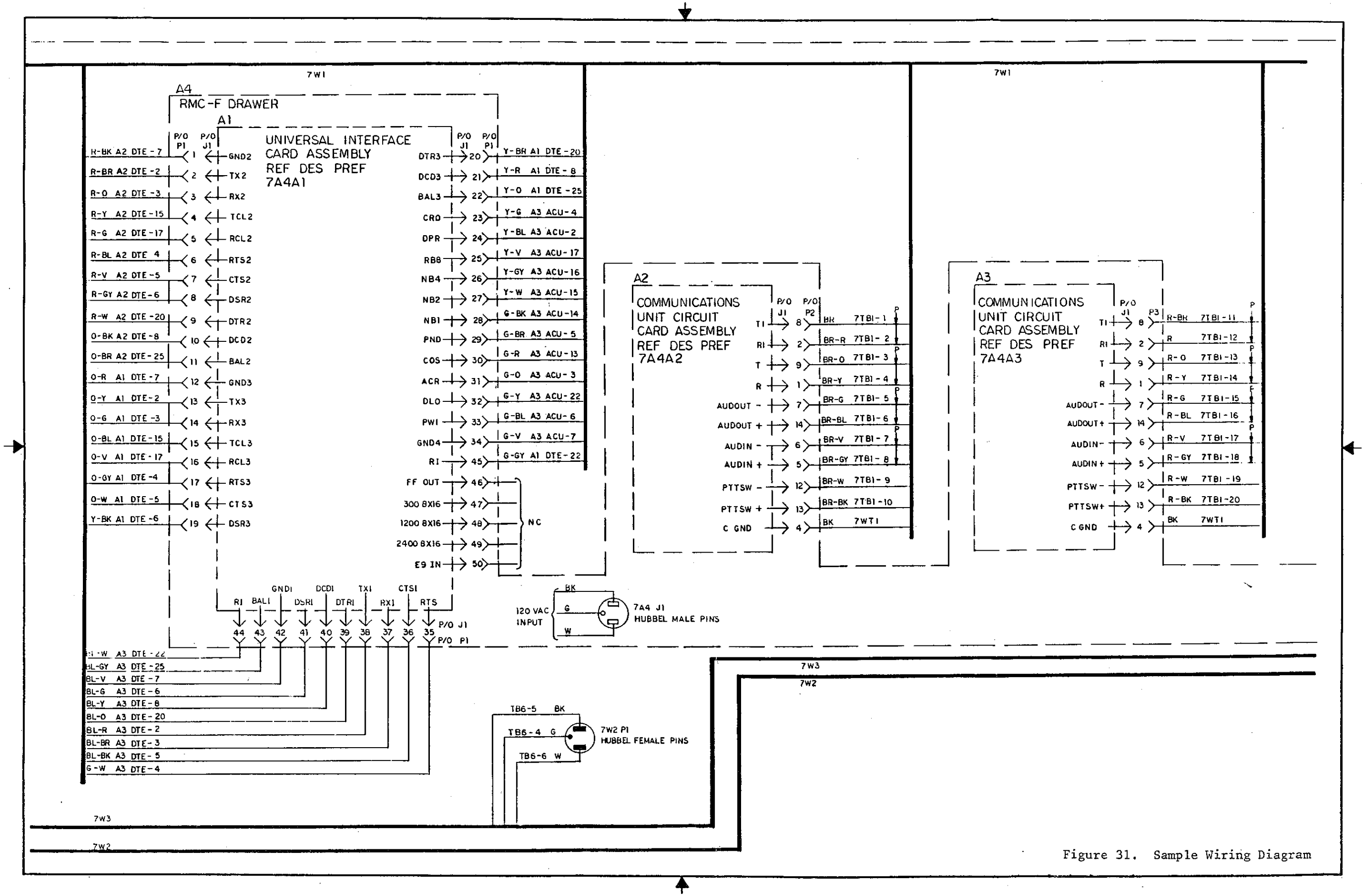

Figure 31. Sample Wiring Diagram

Downloaded from http://www.everyspec.com

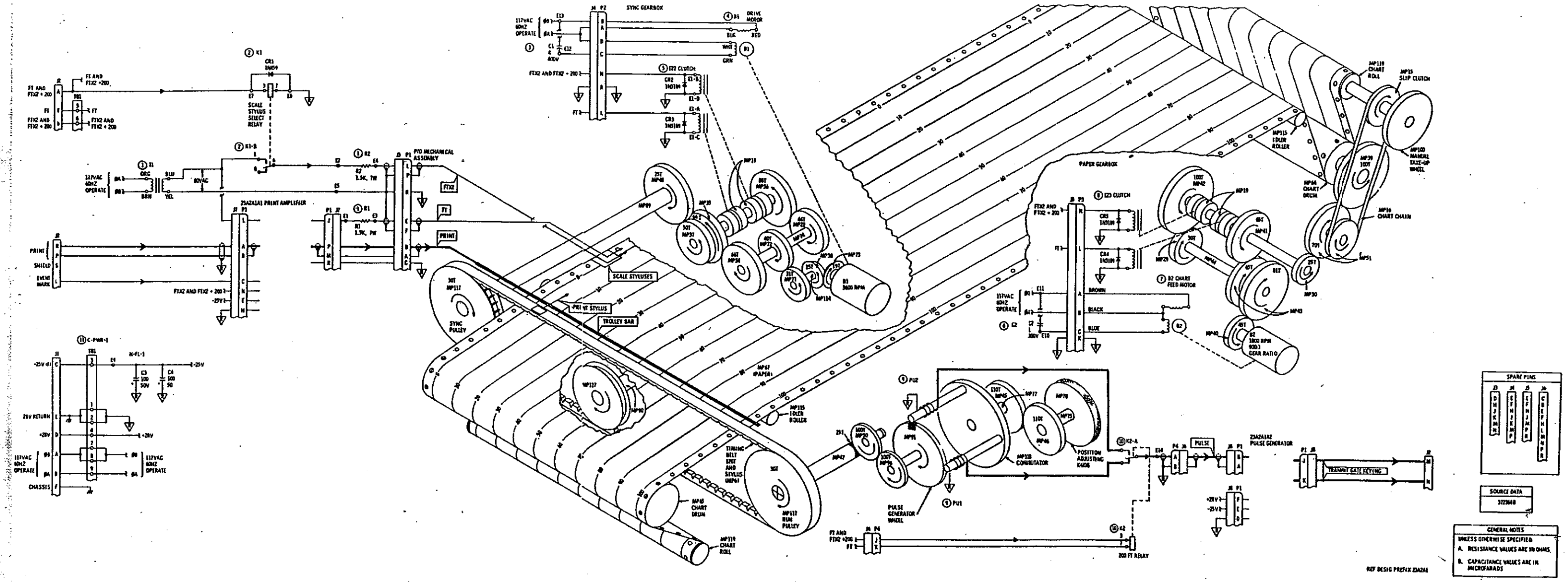

Figure 32. Mechanical Schematic

Downloaded from http://www.everyspec.com

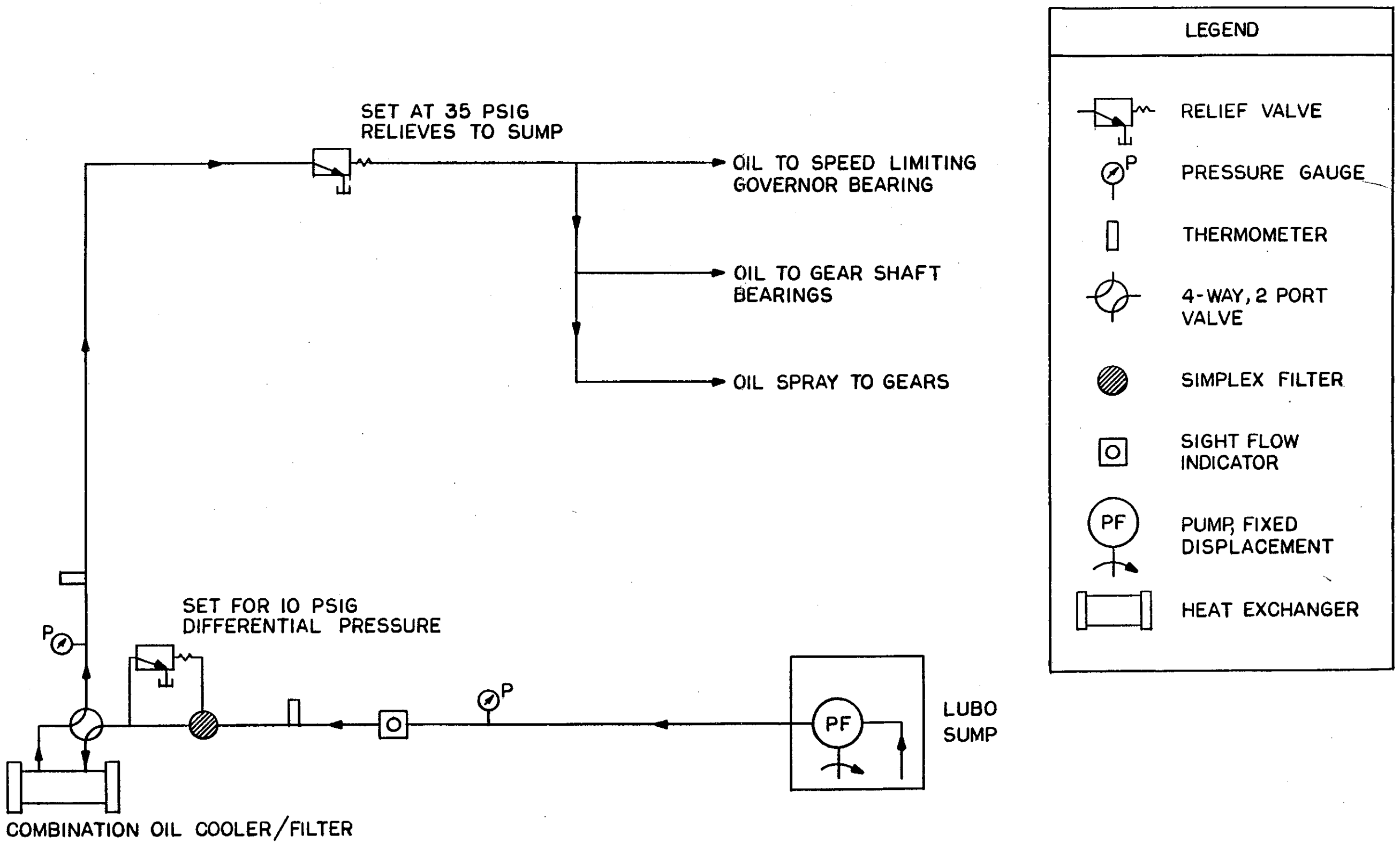

Figure 33. Piping Diagram

Downloaded from http://www.everyspec.com

SUMMARY OF DEFINITIONS

Definitions

Blocked schematic. - A blocked schematic is a circuit diagram functionally arranged to show all circuit elements encompassed within as assembly. In some instances, the circuit elements of plug-in devices will be included so that a true functional relationship will be evident.

Circuit element. - A circuit element is similar to a functional device, except that it is an electrical part that, by itself, performs a basic function.

Functional device. - A functional device is the same as a functional entity, except that it is usually a single product of supply such as a motor, valve, pulley, gear, etc.

Functional entity. - A functional entity is a grouping of parts that, when connected together, performs a basic function (e.g., amplify, oscillate, filter, voltage divide, etc.) and in the event of a malfunction, provides a recognizable (visual, audible, or measurable) symptom. In digital circuits, electronic parts represented by symbols (either singularly or in groups) can be considered a functional entity if the basic grouping represents the least number of components required to perform a discrete function and if a malfunction therein will produce a recognizable symptom. The term functional entity, as used herein, is identical to a functional circuit.

Ground check. - A ground check is an evaluation at ground level of the radiated signal associated with a system, subsystem, or equipment. Ground checks are conducted by airway facilities maintenance personnel.

In-process review. - A review by FAA elements of manuscript drafts for the purpose of assessing adequacy and accuracy of the instruction book and generating comments and suggestions for improvement.

Major hardware items. - Major hardware items include cabinets or racks and such items as motor controllers, engines, refrigerators, and pumps.

Performance check. - A performance check is a test, measurement, or observation of normal operating controls and functions to determine whether a system, subsystem, or equipment is operating within its established tolerance.

Validation. - The process by which the contractor checks the instruction book contents for accuracy. This involves such items as cross-checking schematics against actual equipment construction, performance of operational procedures, and actual performance of maintenance tasks and procedures as presented in the text.

Downloaded from http://www.everyspec.com

Verification. - The process by which the Government representative verifies that the contractor has accurately validated the instruction book.

Wraparound. - A wraparound is an enclosure and the attached circuit elements that remain after removal of certain assemblies such as chassis, printed circuit boards and trays, pistons, gears, and shafts. Elements not removed from a wraparound would include items such as cable harnesses, terminal boards, and pressed-in bearings.

Downloaded from http://www.everyspec.com

ACRONYMS AND ABBREVIATIONS

ac	alternating current
ANSI	American National Standards Institute
CO	Contracting Officer
dc	direct current
FAA	Federal Aviation Administration
GPO	Government Printing Office
hp	horsepower
IEEE	Institute of Electrical and Electronics Engineers
IFB	invitation for bid
pcb	printed circuit board
PM	Program Manager
QRO	Quality/Reliability Officer
RFP	request for proposal
rpm	revolutions per minute
TO	Technical Officer

Downloaded from http://www.everyspec.com

APPENDIX I

COMMERCIAL INSTRUCTION BOOKS

1. GENERAL

When the FAA purchases off-the-shelf equipment, instruction books are generally available for that equipment from the manufacturer. These commercial publications may or may not meet FAA requirements. The CO has the authority to accept, reject, or require changes or additions to these publications. These may be in the form of direct changes to the original or by addition of an appendix to include required material. Strikeouts and overwriting shall not be acceptable. Evaluation of commercial instruction books shall be according to the guidelines established in this appendix and shall be based on reviews by both the CO and the TO, with the final decision resting upon the CO.

2. PHYSICAL CONSTRUCTION

Commercial instruction books shall be of a size and quality acceptable to the FAA. Consideration shall be given to paper stock, binding, and overall dimensions, keeping in mind the intended place and type of use. Construction must ensure that the books withstand repeated and extended use. Overly large or extremely small book sizes make it difficult to use, store, and locate the documents. Foldout drawings containing many folds are too bulky in some applications. The CO should review applicable portions of paragraphs 3.3, 3.6.20, and 4.1 of the main text for guidance. Although the requirements contained therein are not mandatory for commercial publications, any departures should not be excessive.

3. TEXT REQUIREMENTS

The text of commercial instruction books shall approximate the standards set forth in this specification. Particular attention is called to the following areas:

a. Writing level (ref. 3.1.1) shall be commensurate to the depth of the subject; i.e., areas addressing operation of the equipment, block level theory, and low-echelon maintenance shall be presented at a simpler level than those areas dealing with detailed theory, component-level troubleshooting and repair, and computer programming.

b. Nomenclature (ref. 3.1.4) shall be consistent between the various parts of the text, and between text and artwork or other references within the text.

c. Reference designations, symbols, and abbreviations (ref. 3.4) shall be those accepted as standard in industry. Any unusual cases shall be fully defined within the text.

Downloaded from http://www.everyspec.com

d. Artwork and troubleshooting support data (ref. 3.6.20) shall generally exhibit those qualities defined within the main text of this specification. Requirements are not rigid, but the data should be neat, legible, comprehensive, and easy to follow. In evaluating this data, particular attention should be placed on those items discussed in these subparagraphs of the main text: 3.6.20.2, -.4, -.5, -.7, -.11, -.12, -.19, -.20, -.21, -.22, -.23.

4. CONTENTS

Commercial instruction books shall contain the technical portions labeled as sections in table I of the main text and discussed below (references are to main text). The sections do not necessarily have to be in the order shown or be subdivided into as many parts. Some interrelated sections such as 4, 5, 6, and 7 may be combined. The evaluation should consider only that the information is there and that it satisfies the need. Unless the book is very brief, it should contain a table of contents and a listing of tables and illustrations.

4.1 General Information. - (Ref. 3.6.10) The content of this section shall provide management, supervisory personnel, and other users having a general interest in the equipment with a rapid reference source for determining the purpose, physical and functional characteristics, operational capabilities, and limitations of the equipment. Detailed technical explanations shall not be used in this section. When appropriate, text material shall be augmented with suitable listings, tables, photographs, and illustrations.

4.2 Operation. - (Ref. 3.6.12) This section of the instruction book shall provide the information and procedures necessary to place the equipment into operation and to maintain or change that operation as required. Diagrams or photographs showing locations of controls and adjustments must be included. The text shall include procedures for equipment shutdown.

4.3 Technical description. - (Ref. 3.6.11) The information in this section shall be sufficient to enable a complete understanding of just how the equipment works. Text shall reference diagrams and drawings within this section or contained in a separate troubleshooting support section. The description shall first be presented in a simplified form and referenced to block diagrams, then be followed by a detailed theory of operation referenced to schematic diagrams of the equipment. Mechanical functions shall also be described.

4.4 Standards and tolerances. - (Ref. 3.6.13) This information may be presented as a separate section, or it may be included as a part of a related subject such as maintenance procedures in which the information is required to complete the task. Regardless of location within the book, the information must be provided.

Downloaded from http://www.everyspec.com

4.5 Periodic maintenance. - (Ref. 3.6.14) This includes performance checks and recurring maintenance tasks that are designed to forestall equipment breakdown. The description must include required test equipment and tools and their setup.

4.6 Maintenance procedures. - (Ref. 3.6.15) This information may be presented as a separate section, or the procedures may be included in those sections dealing with the maintenance tasks, whether preventive or corrective in nature.

4.7 Corrective maintenance. - (Ref. 3.6.16) This shall contain information required to perform corrective maintenance tasks that do not lend themselves to normal troubleshooting procedures (use of technical descriptions and schematic diagrams). It shall include discussions for replacement and checkout of parts and components peculiar to that particular equipment.

4.8 Parts list. - (Ref. 3.6.17) Commercial instruction books shall contain a listing of all replacement parts for the equipment. The list shall identify and describe each part and provide all necessary part numbers and source data required for procurement.

4.9 Installation, integration, and checkout. - (ref. 3.6.18) Instructions and related drawings shall be included for normal installation and checkout of the equipment. In those cases involving complex integration with equipment not considered at the time of design or instruction manual publication, this information may be added as an appendix to the original book.

4.10 Computer software. - (Ref. 3.6.19) If the equipment discussed in the commercial instruction book contains a computer or microprocessor, the items outlined in the main text will be required. This may also be supplied as an appendix or in separate publications.

4.11 Troubleshooting support data. - (Ref. 3.6.20) Commercial instruction books must contain all needed data of this type to effect isolation and repair of faulty components. This data includes block diagrams, schematic diagrams, logic diagrams of required levels, functional and signal flows, power and its distribution, and photos or diagrams of cabinets, chassis, modules, and printed circuit boards.

5. EVALUATION

The CO should enlist the aid of the TO in evaluating commercial instruction books. Guidelines can only be general because these books were not prepared to this specification. As an aid in the evaluation, it is suggested that the CO use a checksheet similar to that shown in figure I-1. Completion of this form will provide an overall view of the book's merit. Any checkmarks in the Unacceptable column would, of course, require remedial action. Excessive marks in the Poor column might require the same or even be possible cause for rejection.

Downloaded from http://www.everyspec.com

EVALUATION OF COMMERCIAL INSTRUCTION BOOK FOR

_____
(Name of equipment)

_____
Contract

Item	Reference	Rating			
		Good	Fair	Poor	Unacceptable
Physical Construction	2				
Writing Level	3a				
Nomenclature	3b				
Reference Designations	3c				
Artwork	3d				
General Information	4.1				
Operation	4.2				
Technical Description	4.3				
Standards and Tolerances	4.4				
Periodic Maintenance	4.5				
Maintenance Procedures	4.6				
Corrective Maintenance	4.7				
Parts List	4.8				
Installation	4.9				
Computer Software	4.10				
Troubleshooting Support	4.11				

Signed _____

Title _____ Date _____

FIGURE I-1. EVALUATION CHECKSHEET

Downloaded from http://www.everyspec.com

INDEX

SUBJECT	PARAGRAPH
Acronyms and abbreviations	3.4.10
ANSI documents	2.4
Appendix I	page 15
Applicable documents	2.
Arrangement of contents	3.6
Assembly Instructions	4.1.5
Binding	5.4
Block diagrams	3.6.20.5
Cabling diagram	3.6.20.20
Callouts	3.6.20.16
Completeness and continuity	4.1.4
Content (maintenance procedures)	3.6.15.1
Content assurance page	3.6.5
Continuous tone illustrations	3.6.20.14
Contractor commercial publications	3.6.20.1.1
Contractor guarantee	3.6.2
Contractor inspection	4.1.1
Controls and indicators	3.6.12.1
Coordination	4.2.2
Corrective maintenance	3.6.16
Covering of artwork	3.3.2.2.3
Cross-reference listings	3.6.19.3.2
Database description	3.6.19.2.6
Design change incorporation	3.6.17.3
Detailed theory of operation	3.6.11.2
Development of text	3.1.5
Diagrams for analog equipment	3.6.20.7.1
Diagrams for functional entities	3.6.20.7.2
Discrete circuit element data	3.6.20.10
Draft artwork	3.3.1.3
Draft manuscript	3.3.1
Drilling	5.3.5
Electrical parts	3.6.17.4
Environmental characteristics	3.6.10.4.5
Equipment description	3.6.10.2
Equipment required but not supplied	3.6.10.6
Equipment shutdown	3.6.12.4
Equipment specification data	3.6.10.4
Equipment supplied	3.6.10.5
Equivalent circuits	3.6.11.2.1
External power requirements	3.6.10.4.3

Downloaded from http://www.everyspec.com

SUBJECT	PARAGRAPH
Family tree chart	3.6.9
Final artwork	3.3.2.2
Final manuscript	3.3.2
Flowchart symbols	3.4.6
Format (maintenance procedure)	3.6.15.2
Format (parts list)	3.6.17.1
Front cover	3.6.1
Functional characteristics	3.6.10.4.2
Functional circuits	3.6.20.8
Government inspection	4.6
Grammatical person and mood	3.1.2
Graphic symbols	3.4.4
Identification of adjustments and controls	3.6.20.11
Indicating fuseholder	3.6.17.8
Indicating lights	3.6.17.9
Initial startup and test	3.6.18.7
Initial tolerance limit	3.6.13.4
In-process review	3.3.1.1
Input requirement summary	3.6.18.4
Inspection (installation)	3.6.18.6
Inspection of artwork	4.1.2
Installation drawings	3.6.18.2
Installation procedures	3.6.18.5
Installation verification test	3.6.18.8
Interconnect cables and circuits	3.6.13.6
Interface (software)	3.6.19.2.3
Leader lines	3.6.20.17
Legibility (artwork)	3.6.20.2
Letter symbols and math signs	3.4.3
Letter symbols for semiconductors	3.4.2
List of effective pages	3.6.4
List of illustrations	3.6.7
List of manufacturers	3.6.17.12
List of specification modifications	3.6.3
List of tables	3.6.8
Listings	3.6.19.3
Load maps	3.6.19.3.3
Logic circuits	3.6.11.2.3
Logic symbols	3.4.7
Lubrication data	3.6.17.7
Machine printouts	3.3.2.1.1
Maintenance procedures	3.6.15
Major function diagram	3.6.20.6

Downloaded from http://www.everyspec.com

SUBJECT	PARAGRAPH
Manuscript	3.3
Manuscript plan	3.2
Manuscript schedule	3.2.2
Mechanical data	3.6.17.5
Mechanical diagrams	3.6.20.21
Mechanical functions	3.6.11.2.4
Mechanical symbols	3.4.5
Method of presentation	3.6.20.1
Nameplate data	3.6.10.4.1
Negatives	5.3.3
New equipment	1.1.1
Nomenclature and reference designation	3.6.20.9
Numbering and titling (art)	3.6.20.3
Numbering and titling of tables	3.1.7.4
Offsite maintenance	3.6.14.4
Offsite repair	3.6.16.2
Onsite corrective maintenance	3.6.16.1
Operating tolerance limits	3.6.13.5
Operation	3.6.12
Operator's instructions	3.6.19.4
Original artwork	3.3.2.2.1
Other maintenance procedures	3.6.15.4
Other onsite maintenance	3.6.14.3
Overhaul, maintenance, and repair standards	3.6.16.4
Overlays on artwork	3.3.2.2.2
Packaging of books for delivery	5.6
Packaging of original art	5.2
Packaging of reproducible copy	5.1
Packing instructions	3.6.16.5
Page numbers	3.3.1.2.4
Page size	5.3.1
Page stock	5.3.2
Paragraph headings	3.3.1.2.3
Paragraph numbers	3.3.1.2.2
Parameters	3.6.13.1
Parts list	3.6.17
PCB illustrations	3.6.20.15
Performance check	3.6.14.2
Performance check procedures	3.6.15.3
Periodic maintenance	3.6.14
Personnel	4.2.1
Photographs	3.6.20.13
Piping diagram	3.6.20.22
Plug-ins	3.6.17.11

Downloaded from http://www.everyspec.com

SUBJECT	PARAGRAPH
Power distribution diagram	3.6.20.18
Precedence of requirements	1.3
Printing	5.3.4
Printing instructions	5.3
Procedures paragraph reference	3.6.13.2
Program capacities	3.6.19.2.3
Program description	3.6.19.2
Program documentation	3.6.19.2.7
Program flow	3.6.19.1.3
Program hierarchy	3.6.19.1
Program inputs	3.6.19.2.4
Program listings	3.6.19.3.1
Program outputs	3.6.19.2.5
Program purpose	3.6.19.2.1
Proofreading	4.1.3
Prospectus	3.2.1
Publication date	3.3.2.1.3
Publication number	3.3.2.1.2
Quality program requirements	4.2
Rated output	3.6.10.4.4
Reference designations	3.4.1
Relationship of units	3.6.10.3
Remote monitor and alarms	3.6.13.7
Remote monitor and control	3.6.12.3
Responsibility	1.2
Responsibility for inspection	4.1
Review and acceptance of books	5.5
Rules for tables	3.1.7.2
Schematic diagrams	3.6.20.7
Security classification marking	3.5
Separate oversize binding	3.6.20.1.3
Simplified theory of operation	3.6.11.1
Site information	3.6.18.1
Size of illustrations	3.6.20.4
Special maintenance procedures	3.6.15.5
Special symbols	3.4.9
Standard	3.6.13.3
Standard binding	3.6.20.1.2
Standards and tolerances	3.6.13
Suggested improvements form	3.3.2.3
Switch gear and industrial controls	3.4.8
Table of contents	3.6.6
Tables	3.1.7