DOD-STD-863B

22 JUNE 1979

SUPERSEDING

MIL-STD-863A(USAF)

10 DECEMBER 1975

MILITARY STANDARD

WIRING DATA AND

SYSTEM SCHEMATIC DIAGRAMS

PREPARATION OF

DRPR

DEPARTMENT OF DEFENSE
WASHINGTON D.C. 20301

WIRING DATA AND SYSTEM SCHEMATIC DIAGRAMS FOR AEROSPACE APPLICATIONS, PREPARATION OF

DOD-STD-863B

1. This Military Standard is approved for use by all Departments and Agencies of the Department of Defense.

2. Recommended corrections, additions or deletions should be addressed to: Hq Oklahoma City Air Logistic Center (HQ OC-ALC), Specialized Engineering Division (MME), Tinker AFB, OK 73145.

FOREWARD

1. The purpose of this standard is to establish standard wiring data and schematic diagram requirements for aerospace vehicles and aerospace support applications.

2. This standard implements the intent of ISO 2042-1973-10-01, aircraft electrical circuit diagrams.

3. This standard supplements the general requirements of DOD-STD-100, Engineering Drawing Practices, with detailed information on specific drawing requirements.

4. Compliance with the requirements herein will:

a. insure uniform state-of-the-art data preparation and presentation.

b. enhance training and understanding of systems by use of schematics and diagrams directly reproduced from engineering data.

c. permit direct incorporation of engineering data into technical publications without need for redraw.

d. provide rapid access to aerospace vehicle wiring and system data.

e. provide the management activity with management and configuration control data.

f. provide effective engineering source document for fault isolation logic and analysis.

5. Tailoring of the use of this standard to meet the requirements of a specific contract is encouraged.

CONTENTS

CONTENTS-Cont

CONTENTS-Cont

CONTENTS-Cont

FIGURES

FIGURES-Cont

APPENDICES

Appendix A System/Subsystem/Subject (S/S/SN) Numbering System

LEFT BLANK

1. SCOPE

This standard establishes the requirements for specific preparation and specific presentation of engineering data for aerospace vehicles and aerospace support applications. This engineering data (wiring data and schematic diagrams) is to be used for (1) configuration control by management activity, (2) direct incorporation into technical publications without redrawing, (3) training of maintenance personnel, and (4) development of engineering source document for fault isolation logic and analysis.

2. REFERENCE DOCUMENTS

2.1 Issues of documents. The following documents of issue in effect on date of invitation for bids or request for proposal, form a part of this standard to the extent specified herein.

SPECIFICATIONS

MILITARY

MIL-W-5088	Wiring, Aircraft, Installation of
MIL-D-5480	Data, Engineering and Technical, Reproduction Requirements for
MIL-M-9868	Microfilming of Engineering Documents, 35mm, Requirements for
MIL-C-39029	Contact, Electrical, General Specifications for

STANDARDS

MIL-STD-12	Abbreviations for Use on Drawings, Specifications, Standards and in Technical Documents
MIL-STD-17-2	Mechanical Symbols for Aeronautical, Aerospace Craft and Spacecraft Use
DOD-STD-100	Engineering Drawing Practices
MIL-STD-681	Identification Coding and Application of Hookup and Lead Wire
DOD-STD-1476	Metric System, Application in New Design

PUBLICATIONS

DEFENSE SUPPLY AGENCY

H4-1	Cataloging Handbook, Federal Supply Code for Manufacturers, Name to Code

(Copies of specifications, standards, drawings, and publications required by contractors in connection with specific procurement functions should be obtained from the procuring activity or as directed by the contracting officer.)

2.2 Other publications. The following documents form a part of this standard to the extent specified herein. Unless otherwise indicated, the issue indicated below shall apply.

ANSI Y14.1-1975	Drawing Sheet, Size and Format
ANSI Y14.2-1979	Line Conventions and Lettering
ANSI Y14.15-1966	Electrical and Electronic Diagrams
ANSI/IEEE 260-1978	Letter Symbols for Units Used in Science and Technology (Formerly Known as ANSI Y10.19)
IEEE STD 91-1973	Graphic Symbols for Logistic Diagrams (Two-state Devices) (Same as ANSI Y32.14-1973)
IEEE STD 100-1975	Reference Designations for Electrical and Electronic Parts and Equipment (Same as ANSI Y32.16-1975)
IEEE STD 315-1975	Graphic Symbols for Electrical and Electronics Diagrams (Including Reference Designation Class Designation Letters) (Same as ANSI Y32.2-1975)

(Application for copies should be addressed to the American National Standards Institute, 1430 Broadway, New York NY 10018, or The Institute of Electrical and Electronic Engineers, Inc., 345 East 45th Street, New York NY 10017.)

2.3 Order of precedence. In the event of conflict between this standard and reference listed in paragraph 2.1 and 2.2 above, this standard shall take precedence over all referenced documents.

3. DEFINITIONS

3.1 Master reproducible. A deliverable original, first generation copy, or duplicate copy of a drawing.

3.2 Aerospace vehicle functional system. A functional system is a combination of inter-related groups of equipment, sets and

line replaceable units (LRUs) arranged to perform an operational function within an aerospace system. Specific system descriptions may be found in Appendix A.

3.3 Sub-system. A sub-system is a combination of related groups of equipment, sets and LRUs arranged to perform a specific function with a system and is a major sub-division of the system. Specific sub-system descriptions may be found in Appendix A.

3.4 Sub-sub-system. A sub-sub-system is generally a single set or group of related equipment and LRUs arranged to perform a specific function of a sub-system and is a sub-division of a sub-system. A sub-sub-system of a highly complex sub-system and system may consist of more than one identical and redundant single set of equipment.

3.5 Line replaceable unit (LRU). An LRU is a unit which can be removed from an aerospace system and replaced with a like operating unit, in order to restore the operational capability of the next higher system.

3.6 Wire harness. A wire harness consists of one or more conductors, including coaxial cables which are grouped together or treated as a separate assembly for the purpose of ease of assembly or installation.

3.7 Management activity. A generic term used to denote the governmental organization responsible for the aerospace system during a specific phase of its acquisition/service life cycle.

3.8 Modification directive. The formal authorization document directing modification of an aerospace system. The directive may be in the form of a Time Compliance Technical Order (TCTO-USAF), Modification Work Order (ARMY), Airframe Technical Directive (NAVY), Service Bulletin, etc.

3.9 Technical publication. A technical publication is a manual containing a description of a weapon system and equipment, with instructions for effective use, including one or more of the following sections: installation, preparation for use, operation, maintenance, overhaul, parts breakdown, related technical information, or procedures.

4. GENERAL REQUIREMENTS

4.1 Wiring data and system schematic diagrams. The wiring data and system schematic diagrams shall be prepared in book-form drawing format in accordance with DOD-STD-100 and this standard. Pages shall be prepared, arranged and numbered in

accordance with this standard. Each modification or alteration to the aerospace system shall be documented.

4.2 Drawing method. The wiring data and system schematic diagrams may be prepared and maintained in any suitable manner which is capable of being reproduced as master reproducible data conforming to the format, drawing density, drawing quality, and all other requirements of this standard and DOD-STD-100.

4.3 Drawing size and format. Drawings shall conform to the requirements of this standard (see Figures 1 and 2), and where specified, to ANSI Y14.1. All drawing dimensional requirements specified in 4.3.1 and 4.3.2 or elsewhere in this standard refer and apply to deliverable master reproducible drawings.

4.3.1 Diagram pages. Diagram pages shall be prepared on C or D size formats, as specified by procuring activity. Letters shall be upper case (sans serifs preferred) with no more than 10 characters per inch (25mm). Upper case letters representing lower case letters, such as in connector pin identification, shall be followed by an asterisk in accordance with ANSI Y14.15. The minimum letter and number heights on wiring and schematic diagrams shall be in accordance with ANSI Y14.2. Letters, numbers, and symbols shall be machine applied or hand scribed using templates or guides. Free-hand lettering is not permitted. Lines may be inked or photoprocessed. Line spacing on diagram pages shall be based on a .10 inch (2.5mm) grid system with a minimum separation of .20 inch (5mm).

4.3.2 Records, indexes, lists, and general information. Record, index, general information, and list pages shall be prepared for reproduction on B or C size formats (see Figures 5 through 13). NOTE: Figures containing automated printout are intended only for format presentations; automated printout is not a requirement. Letters shall be upper case (sans serifs preferred), with no more than 10 characters to the inch (25mm). Upper case letters representing lower case letters, such as in connector pin identification, shall be followed by an asterisk, in accordance with ANSI Y14.15. The minimum letter and number height shall be .12 inch (3.0mm) for C size format and .10 (2.5mm) for B size format. Only mechanically applied lettering, in accordance with ANSI Y14.2, shall be used.

4.4 Legibility and contrast. All master reproducible pages shall meet the requirements of MIL-D-5480.

4.4.1 Reproducible master copies. When stable base reproducible masters are specified in the contract, the copies shall be furnished on 3 to 4 mil erasable stable base polyester film, or as specified by procuring activity.

4.4.2 Microfilming. When microfilmed in accordance with MIL-M-9868, blow backs of Type I Class I microfilm shall produce copies conforming to applicable legibility and contrast requirements.

4.5 Graphic symbols. Electrical and electronic diagram graphic symbols shall conform to IEEE STD 315 and shall be prepared so that the connection points are located at the intersections of a modular grid of 0.10 inch (2.5mm) increments. Dimensions for commonly used symbols shall conform to Figure 3. Other symbol sizes shall be relative to those shown. Terminal stud sizes shall be shown by symbols on the interconnection diagrams in accordance with Figure 35. Mechanical and fluid graphics shall be in accordance with MIL-STD-17-2. When non-standard symbology is needed, a table or tables shall be provided, as general information, which show and explain all symbols used on the drawing. This symbol library, after initial approval by the procuring activity, and subsequent updating, shall be used throughout the lifetime of the aerospace system. IEEE STD 91 shall be used for logic diagrams.

4.6 Unit symbols. Letter symbols for electrical and electronic units shall be in accordance with ANSI/IEEE 260.

4.7 Abbreviations. Abbreviations shall be in accordance with MIL-STD-12.

4.8 Metric system. Metric units of measurement shall be in accordance with DOD-STD-1476.

5. DETAILED REQUIREMENTS

5.1 Book-form wiring and schematic data. System wiring and schematic data shall be prepared as book-form drawings containing the following categories of data.

Category Title	Data Category (Page Prefix)
Revision Record	1
Contents Record	2
General Information	3
Index of Production Diagrams	4
Index of Effective Diagrams	5
Index of Modifications	6
Modification Data Index	7
Connection List	8
Wire Harness List	9
Equipment List	10
Interconnection Diagrams	11
System Schematic Diagrams	12

Equipment Location Diagrams	13
Wire Harness Location Diagrams	14

5.1.1 Drawing title page. The drawing title page shall list the system production unit numbers or serial numbers and each production contract to which the drawing is applicable. The title page shall contain the title of the overall drawing. For example: "Wiring Data and System Schematics Diagrams". The title page shall always bear the latest revision letter assigned to the drawing (see Figure 4).

5.1.2 Book-form drawing revision record. The revision record shall be mechanically prepared and shall alphabetically list each revision to the drawing by revision letter, omit I, O, Q, S, X, and Z (International V), with the date of the revision (see Figure 5). Each line listing shall also contain the approval authority and a description of the change. A brief description of the change shall be made on the revision page or a reference made to the revision authorization document (design change notice, engineering change order, etc.) describing the change. The change description shall include in addition to the description of the change a listing by page number of each drawing page revised and each new page added by the revision and shall become a part of the book-form drawing filed as supplementary revision data pages. This revision record satisfies the DOD-STD-100 requirement for a revision block containing a change history record on each page of the book-form drawing.

5.1.2.1 Revision record page numbering. Each revision record page shall be numbered with a three element number. The first element shall consist of the data category prefix 1 (reference 5.1). The second element shall consist of a four digit number assigned sequentially, beginning with 0001 and shall be the basic page numbers of the revision record. The third element shall consist of a two digit number, beginning with 00, and shall be used as a supplementary page number to the basic page. The pages of the change description shall be numbered sequentially, beginning from the last number previously used in the revision record. Should supplementary pages to the basic page be required, they shall be inserted in the revision record directly after the basic page being supplemented (see the following examples).

```
 1 -0001- 02
 1 -0009- 00
 1 -0009- 01
(a)  (b) (c)
```

a. Data category prefix (for revision record)

b. 0001 - 1st page of revision record.
0009 - 9th page of revision record.
0009 - 9th page of revision record.

c. 02 - 2nd supplementary page to revision record page 0001
00 - Basic page of revision record page 0009
01 - 1st supplementary page to revision record page 0009

5.1.3 Contents record. The contents record shall list each page of the drawing by page number and its latest revision letter. The record shall list all pages which have at any time been released as part of the drawing without regard to current system applicability. The record shall list the pages by category and page sequence in the same order that the data is to be filed or bound as a book (see Figure 6).

5.1.3.1 Contents record page numbering. Each contents page shall be numbered with a three element number. The first element shall consist of the data category prefix 2 (reference 5.1). The second element shall consist of a four digit number assigned sequentially beginning with 0001. The third element shall consist of a two digit number beginning with 00 (see the following example).

2	-	0002	-	00
(a)		(b)		(c)

a. Data category prefix (for contents record)

b. 2nd page of contents

c. Basic page

5.1.4 General information. The general information category of pages shall contain information to fully explain the use and interpretation of the drawing. Sufficient data shall be included to minimize the need for reference to other documents in order to interpret data contained in the drawing. Such data as standard practices in bonding, wiring assembly, installation, etc., may be included. The data described in the following sub-paragraphs shall be included as a minimum.

5.1.4.1 Drawing description. The purpose, arrangement, and use of the drawing shall be fully explained. Each category of data pages shall be listed and the content, interpretation, and use of each shall be described. Column headings on equipment

list, wire harness list, and connection lists shall be shown and explained including descriptors, acronyms, or abbreviations used.

5.1.4.2 Production unit numbers. A cross reference listing or contractor production unit numbers versus government assigned serial numbers shall be provided.

5.1.4.3 System identification numbers. The construction and interpretation of system identification numbers as required by 5.2 shall be explained. A list shall be provided of the system identification numbers that were used with the system titles. A list shall, also, be included of all sub-sub-system identification numbers that were used on the drawing with their respective titles.

5.1.4.4 Higher level designations. The arrangement and interpretation of higher level designations as required by 5.2 shall be explained. A table shall be included listing all class letters used in the drawing with their assigned noun phrases.

5.1.4.5 Wire harness numbers. Wire harness numbers shall be explained and the methods used to physically identify harnesses shall be described (see 5.4).

5.1.4.6 Wire numbers. The arrangement and interpretation of wire identification numbers (reference 5.4) shall be fully explained and each method used to physically identify wires such as imprinting, color coding, etc., shall be explained.

5.1.4.7 Manufacturers (Vendors) list. A listing shall be provided of each manufacturer (vendor) of an LRU. The list shall consist of the name, address, and when assigned, the Federal Supply Code for Manufacturer (FSCM) in accordance with Cataloging Handbook H4-1.

5.1.4.8 Electromagnetic compatibility criteria. Electromagnetic compatibility category designators required by 5.5 shall be listed and explained. Wire separation nomographs and other installation criteria concerning electromagnetic compatibility shall be included in this section.

5.1.4.9 Wire type code. Wire type codes required by 5.6 shall be explained and listed.

5.1.4.10 Symbols library. A table(s) shall be provided which shows and explains all symbols used on the drawing(s). Once established and approved by the Management Activity, the same symbols shall be used throughout the life cycle of the system.

If a new symbol is developed, the contractor shall initiate required action to incoporate the new symbol into applicable military and industry standards (MIL-STD-17-2 and IEEE STD 315).

5.1.4.11 Notes. Notes on drawings are used to provide supplemental information and instructions, to avoid congestion in the field of the drawing, to avoid repetition of information, and to otherwise assure completeness and clarity of the data. The system notes used shall be fully explained.

5.1.4.11.1 Coded notes. Coded notes are notes which are listed in the general information section and which utilize a coding symbol to indicate the locations throughout the drawing data where each note is applicable. The coding symbol shall consist of a number assigned in numerical sequence and enclosed in parentheses (for example: (5)). Coded notes shall be used for notes required on list and index pages. Coded notes shall also be used on diagrams for notes which are repetitively used. Leaders may be used with the note coding symbol on diagrams, but in general should be avoided.

5.1.4.11.2 Local notes. Local notes are numbered notes which are grouped together on a drawing and which apply only to that specific page. Local notes shall be used only on diagram pages. When a numbered local note must indicate applicability at a particular location within the diagram to achieve clarity, the note number shall be within a flag (for example: 5) and the numbered flag shall also be entered on the diagram at the location(s) to which the note applies.

5.1.4.12 General information page numbering. Each general information page shall be numbered with a three element number. The first element shall consist of the data category prefix 3 (reference 5.1). The second element shall consist of a four digit number assigned sequentially beginning with 0001, and shall be the basic page number of the general information. The third element shall consist of a two digit number beginning with 00, and shall be used as a supplementary page number to the basic page (see the following example).

3	-	0001	-	00
3	-	0002	-	01
(a)		(b)		(c)

a. Data category prefix (for general information)

b. 0001 - 1st page of general information
0002 - 2nd page of general information

c. 00 - Basic page of the general information page 0001
   01 - Supplementary page to general information page 0002

5.1.5 Index of production diagrams. The index of production diagrams shall list all diagrams applicable to systems as delivered from production to the government. The index shall list the production unit number or government-assigned serial number of all systems which each diagram is applicable. Each diagram shall be identified by page number, noun phrase, and applicable revision letter. This index shall provide a permanent record of the exact "as delivered" configuration of the aerospace system. A separate page or group of pages shall be prepared for each system number assigned in accordance with 5.2.1 (see Figure 7).

5.1.5.1 Index of production diagrams page numbering. Each page of the production diagram index shall be assigned four element number. The first element shall consist of the data category prefix 4 (reference 5.1). The second element shall consist of the diagram category prefix (reference 5.1). The third element shall consist of the functional system number (reference 5.2.1 and Appendix A) or location code (reference 5.1.14.1). The fourth element shall consist of a two digit number assigned sequentially beginning with 01. (See the following examples.)

4 - 13 - 24 - 01
4 - 14 - 00 - 01
(a) (b) (c) (d)

a. Data category prefix (for production diagram index)

b. Diagram category

   11 - Interconnection diagrams
   12 - Schematic diagrams
   13 - Equipment location diagrams
   14 - Wire harness location diagrams

c. System designator (reference 5.2.1 and Appendix A)

d. 1st page of system grouping

5.1.6 Index of effective diagrams. The index of effective diagrams shall list all diagrams currently applicable and shall list the production unit number or government-assigned serial

numbers of all systems which each diagram is applicable. Each diagram shall be identified by page number, noun phrase, configuration code, and applicable revision letter. This index shall identify the current authorized applicability of each diagram and shall be updated as necessary to incorporated approved modifications and changes upon direction of the management activity. The index shall indicate modification sequencing affecting diagram applicability including superseding and superseded diagram information. The index shall also identify the incorporating modification directive for all diagrams effected as a result of modifications. After a diagram has been incorporated on all systems to which it applies, superseded diagram information shall be deleted upon direction of the Management Activity. A separate index page or group of index pages shall be prepared for each system number assigned in accordance with 5.2.1 (see Figure 8).

5.1.6.1 Index of effective diagram page numbering. Each page of the effective diagram index shall be assigned a four element number. The page number shall be assigned as in 5.1.5.1 except the data category prefix in the first element shall be 5.

5.1.7 Index of modification. The modification index shall list each modification, after delivery of the production system, affecting wiring or requiring the addition, deletion or change of an LRU (see 5.7.1). As a minimum, the index shall list the modification number (sequentially assigned), modification title, the drawing number of the top installation drawing for the modification and its Federal Supply Code for Manufacturers number, the Engineering Change Proposal number or other change number, and the modification directive (see Figure 9).

5.1.7.1 Index of equipment modifications page numbering. Each page of the index of modifications shall be assigned a three element number. The first element shall consist of the data category prefix 6 (reference 5.1). The second element shall consist of a four digit number assigned sequentially beginning with 0001. The third element shall consist of a two digit number beginning with 00 (see the following example).

6	-	0002	-	00
(a)		(b)		(c)

a. Data category prefix (for modification index)

b. 2nd page of modification index

c. Basic page

5.1.8 Modification data indexes. An individual modification index consisting of one or more pages shall be prepared for each after-delivery modification affecting wiring or requiring the addition, or deletion, or change of a line replaceable unit. Each index shall list the production unit or serial number of the applicable systems, the modification title, the contract number, the top installation drawing for the modification and its Federal Supply Code for Manufacturers, the modification directive, and modification sequencing information. Each index shall list, by page number and revision letter, all list and diagram data affected by the modification including new and superseded pages with the applicability of each page by production unit number or serial number (see Figure 10).

5.1.8.1 Modification data index page numbering. Each page of the modification data indexes shall be assigned a three element number. The first element shall consist of the data category prefix 7 (reference 5.1). The second element shall be a four digit number assigned sequentially according to the modification number (reference 5.1.7) and beginning with 0001. The third element shall consist of a two digit number assigned sequentially according to the number of pages required and beginning with 01 (see the following example).

7	-	0015	-	03
(a)		(b)		(c)

a. Data category prefix (for modification data indexes)

b. 15th modification

c. 3rd page of the 15th modification data index

5.1.9 Connection list. Connection list pages shall list all LRUs to which system wiring is connected and shall identify each connection and the attached wiring. A separate page or group of pages shall be prepared for each sub-system number for which items are listed. Items shall be listed in alpha-numerical order by higher level designations (reference 5.2.2). All connection points on each item shall be listed by alpha-numeric identifier, symbol, color code, etc. Grounds shall be listed by ground point designations (see 5.2.6). For each connection, the complete wire identification (see 5.4), overall system effectivity and sub-sub-system number of the applicable interconnection diagram shall be listed (see Figure 11).

5.1.9.1 Connection list page numbering. Each page of the connection list shall be identified by a four element number.

The first element shall consist of the data category prefix 8 (reference 5.1). The second element shall consist of a two digit functional system number (reference Appendix A). The third element shall consist of a two digit sub-system number (reference Appendix A). The fourth element shall consist of a two digit number assigned sequentially beginning with 01 (see the following example).

8	-	23	-	10	-	01
(a)		(b)		(c)		(d)

a. Data prefix category (for connection list)

b. Functional system (communications)

c. Sub-system (high frequency)

d. 1st page of connection list for the communication HF sub-system

Configuration codes shall not normally be used for page identification except as noted in 5.3.2.2.

5.1.10 Wire harness list. Wire harness data pages shall list all interconnecting wiring (see 4.3.2 NOTE: and Figure 12). A separate page or group of pages shall be prepared for each harness. Each conductor in the harness including shields shall be listed by wire number. Each line listing shall include the following categories of information as applicable:

a. Applicable revision letter for the line entry

b. Wire number (reference 5.4)

c. Wire type code (reference 5.6)

d. Wire length (specify units, i.e., feet/inches (m/mm))

e. Sub-sub-system interconnection wiring diagram number where wire is shown

f. Termination end 1 (higher level designations for LRU at which the conductor is terminated including ground points, splice areas if termination is a splice and adjacent LRU for a shield termination - reference 5.2.2 through 5.2.2.7)

g. Terminating code (a code which identifies the part number of the terminating device to which the wire

attaches and the tooling data for the termination). A three digit code (basic identification number - BIN code) shall be used for connector contacts in accordance with MIL-C-39029. A distinctive code determined by the aerospace system manufacturer shall be used for lugs, splices and ferrules (reference 5.1.4.11.1).

h. Connection point (connet. pt.)

Numbers under the Connet. Pt. column consisting of up to 9 alpha-numeric characters identify pin or socket number for connectors, terminal identification or ground point number for lugs, splice number for splices and ferrule number for shield connections.

i. Termination end 2 (same as item f above)

j. Termination information for end 2 as required for end 1 (reference items g and h above)

k. Modification directive incorporating line listings if applicable

l. System serial or production number incorporating the line listing

m. Electromagnetic compatibility category (EMC) designation for the line listing (reference 5.1.4.8)

n. Signal code - a specific code which identifies the discrete signal carried by the wire may be included for each line listing. This code, if used, shall be listed in the General Information category 3 data under Signal Codes.

The first page of each wire harness group shall identify the manufacture assembly number of the harness, system effectivity and Federal Supply Code for Manufacturers by note or other suitable method.

5.1.10.1 Wire harness list page numbering. Each page of the wire harness list shall be assigned a three element number. The first element shall consist of the data category prefix 9 (reference 5.1). The second element shall be assigned a four digit number consisting of the wire harness identifying number. The third element shall consist of a two digit number asssigned sequentially and beginning with 01 (see the following example).

9	-	0129	-	02
(a)		(b)		(c)

a. Data category prefix (for wire harness list)

b. Harness identifier (129th harness)

c. 2nd page of the 129th harness list

Configuration codes shall not normally be used except as noted in 5.3.2.2.

5.1.11 Equipment list. Equipment list pages shall list all LRUs and equipment enclosures installed in the aerospace system. A separate page or group of pages shall be prepared for each functional system identification number assigned (reference 5.2.1). Items shall be listed by higher level designations (reference 5.2.2.1) in alpha-numerical order. Each line listing shall include part number, noun phrase description, installation drawing effectivity, system production unit or serial number effectivity and location by water line, station line, and buttock line reference. If the line item LRU is part of a higher assembly LRU, the location may be defined as the system higher level designation of the higher assembly in lieu of station, water, and buttock line references. The Federal Supply Code for Manufacturers shall be entered in the part number/FSCM code column under the part number for all parts identified by manufacturer's part number. If a code has not been assigned in Catalog Handbook H4-1, the manufacturer's name and address shall be provided by means of a numerically coded note (reference 5.1.4.11.1). The applicable revision letter for each line entry shall be listed. Additional data columns, such as status and use of item, change authorization, may be included (see Figure 13).

5.1.11.1 Equipment list page numbering. Each page of the equipment list shall be assigned a four element number. The first element shall consist of the data category prefix 10 (reference 5.1). The second element shall consist of a two digit functional system number (reference Appendix A). The third element shall consist of the two digit code 00 (reference general sub-system category Appendix A). The fourth element shall consist of a two digit number assigned sequentially beginning with 01 (see the following example).

10	-	24	-	00	-	02
(a)		(b)		(c)		(d)

a. Data category prefix (for equipment list)

b. System designator (for electrical power systems)

c. Sub-system designator (general sub-system)

d. 2nd page of the electrical power system equipment list

Configuration codes shall not normally be used for page identification except as noted in 5.3.2.2.

5.1.12 Interconnection diagrams. Interconnection diagrams shall be prepared to clearly show all wiring interconnections between LRUs of each sub-sub-system. Only one sub-sub-system shall be shown on a diagram. Except for written data within equipment outlines, interconnection diagrams shall not indicate signal flow. Interconnection diagrams shall be of two types; point-to-point diagrams and block diagrams.

5.1.12.1 Point-to-point interconnection diagrams. A point-to-point interconnection diagram shall be prepared for each sub-sub-system depicting all wiring, connections, and line replaceable units. Aerospace system wiring provided with equipment that is connected externally to the LRU shall be shown complete. Individual wires shall be identified by color coding or numbers. Vendor supplied wiring shall also be identified by a cartwheel symbol (reference IEEE STD 315 Item 1.12). Each diagram may consist of one or more pages as required to depict the complete sub-sub-system and its interfaces (see Figures 15, 16, 17 and 18).

5.1.12.2 Block interconnection diagrams. A block interconnection diagram depicts the overall interconnection relationship of line replaceable units within a sub-sub-system requiring more than 3 pages. The block interconnection diagram shall show and identify by higher level designations all line replaceable units of the sub-sub-system including connectors, junction boxes, mounts, control panels, power sources, etc. Groups of terminal strips, such as those within a junction box, may be shown as a single block and the individual higher level designations tabulated within. Each wire harness shall be shown and shall identify the harness number and the applicable point-to-point interconnect diagram page number (see Figure 14).

5.1.12.3 Interconnection diagram page numbering. Each page of the interconnection diagrams shall be assigned a four element number. The first element shall consist of the data category prefix 11 (reference 5.1). The second element shall consist of a two digit functional system number (reference Appendix A). The third element shall consist of a two digit sub-system number (reference Appendix A). The fourth element shall consist of a

two digit number assigned sequentially beginning with 01 (see the following example).

11	-	23	-	11	-	03
(a)		(b)		(c)		(d)

a. Data category prefix (for interconnection diagrams)

b. System number (for communications system)

c. Sub-sub-system number (for high frequency sub-system)

d. 3rd page (of high frequency sub-sub-system interconnection diagrams)

Configuration codes (reference 5.3.2) shall also be placed in the diagram page block below the page number as required. Within each sub-sub-system, the block interconnection diagram if required shall appear first, followed by the point-to-point interconnection pages.

5.1.12.4 Diagram arrangement. Equipment and interconnecting wiring shall be arranged so as to provide easy traceability of each wire from end to end and to minimize the number of pages required to show the entire sub-sub-system. Both end connections of each wire and the wire number shall be shown on only one page of point-to-point interconnection diagram. An effort should be made to arrange pages of a multiple page diagram functionally if practicable but not in conflict with the above requirements. Information concerning wire path, seals, raceways, cable routes, hole locations, etc., should be indicated with a dashed line in accordance with IEEE STD 315. In drawing wiring lines, the break in the line for wire numbers shall be large enough so that the wire number does not touch the line. On short lines, the wire number shall be inserted near one end. On long lines, the wire number shall be inserted near both ends. In applications where the wire number cannot be inserted into the drawn line, the wire number may be placed in an adjacent location with a leader and arrowhead to show the point of application. The wire number shall be positioned so that no difficulty shall be encountered in associating the proper wire with the wire leader line arrowhead. Wire numbers shall be spaced evenly so that letters and numbers do not touch each other. Where the wire numbers are in a series, one above the other, they shall line up at the left of the wire numbers. Object lines shall be broken for feeder lines. Individual wire lines shall be spaced in increments of 0.2 inch. Line crossing, bends, and jogs shall be kept at a minimum.

5.1.12.5 Interface. Sub-sub-system diagram pages shall cross reference all other sub-system-diagram pages to which it is interfaced. An interface in this respect means a connection point where a sub-sub-system connects to another sub-sub-system or otherwise changes circuit identity from one sub-sub-system to another. The point of interface may be on a circuit breaker, switch, relay, terminal, splice, connector, or other appropriate connection. A dashed line from the connection point shall be used to reference the interfacing diagrams. Interfacing diagrams shall be identified by the individual interconnection diagram page number. (For example: 33-11-01, 23-21-06, A ---33-11-01, etc.)

5.1.12.6 Critical circuit wiring. When circuit functions are so sensitive as to be affected by wire path, direction, or position, the wiring involved is regarded as critical. Critical lengths of wire or cable and critical bending radii that may affect the performance of equipment shall be noted. Such critical wiring requirements can frequently be covered by drawing notes. However, in exceptional cases, a two or three dimensional delineation drawn to scale may be required for a more precise specification of requirements.

5.1.12.7 Line replaceable units (LRUs). All internal wiring of line replaceable units shall be shown with the exception of electronic equipment. The internal wiring shall be shown in simple schematic form (reference Figures 14, 15 and 16). Where several identical line replaceable units appear, the internal wiring schematic of only one need be shown.

5.1.12.8 Line replaceable unit terminals. All line replaceable unit wire terminals shall be shown in the same manner as the line replaceable unit as marked by the manufacturer. Arbitrary terminal identification based on ANSI Y14.15 concepts described under paragraph titled "Identification of Terminals (General)" shall be used on diagrams and lists if the line replaceable unit terminals are not otherwise identified.

5.1.12.9 Busses. Busses shall be identified as being either alternating current or direct current and shall show the applied voltage. Phase and frequency shall be specified if applicable.

5.1.12.10 Circuit breakers. Circuit breakers shall be identified by current rating and applied voltage and shall have the same functional identification as that shown adjacent to the installed circuit breaker. Phase and frequency shall be specified if applicable.

5.1.12.11 Fuses. Fuses shall be identified by current rating, applied voltage and shall have the same functional

identification as that shown adjacent to the installed fuse. Phase and frequency shall be specified if applicable.

5.1.12.12 Switches. Switch markings shall agree with the functional identification adjacent to the installed switch.

5.1.12.13 Transformers. Transformers shall be identified by their voltage and output current rating or by their voltage output.

5.1.12.14 Relays. Relays shall normally be shown in their de-energized conditions. Relays shall be identified and shown complete with diagram references, if applicable, on the interconnection diagram that provides control of the coil or coils.

5.1.12.15 Controls markings. All control markings which appear on the actual equipment shall be repeated identically on the diagram. Controls shall be indicated clearly.

5.1.12.16 Higher level designations. Each item of equipment shall be identified by the higher level designations assigned in accordance with 5.2.2 and IEEE STD 200. LRUs which also have reference designation assigned by the equipment manufacturer, shall in addition show the equipment manufacturer's designator in parentheses. Each connector, terminal strip, or other connecting point for interconnecting wiring which is part of a replaceable unit shall be identified by the reference designation assigned by the equipment manufacturer (for example: 1J1, 1J2, 2TB1, etc.). The system identification number may be left off the interconnection diagram for equipment which is a part of that system. (Example: a 2311P1 connector can be placed on the 11-23-11-01 diagram as P1 but a 2459CB1 on the 11-23-11-01 diagram must be identified by 2459CB1 indicating it is a part of the 2459 system.)

5.1.13 System schematic diagrams. System schematic diagrams shall be prepared to depict the energy paths and interrelationships between LRU within an aerospace system. The energy paths may be copper, fluid, mechanical, or electromagnetic. Schematic diagrams shall be structured in a logical manner that will show the complete functional performance and relationship of the systems, sub-systems and sub-sub-systems of the aerospace system. Clarity of presentation of the information depicted on the schematic diagram shall be a prime requirement. Graphic presentation of LRUs shall be shown by symbol, picture, or cutaway (see Figure 19). Schematic diagrams shall portray a system in a sufficient detail to permit trouble analysis to an electrical or mechanical failure and to permit understanding of the system operation by maintenance personnel. Three levels of

detail shall be used in preparation of schematic diagrams. These levels are: block, simplified, and detail.

5.1.13.1 Block schematic diagrams (first level). The block schematic diagram shall be complete, on one page, for the system, sub-system, or sub-sub-system being depicted. The primary purpose of the block schematic diagram is to provide a rapid understanding of the major replaceable units and their interrelationships. Signal flow information is limited to primary functions and does not include control, inhibiting, interlocking, etc. LRU representation shall generally be limited to rectangular shapes with restricted use of symbols and pictorial drawing. Block schematic diagrams shall be prepared for each system except those instances where 1 or 2 sub-sub-systems comprise the entire function (see Figures 20 and 21).

5.1.13.2 Simplified schematic diagrams (second level). Simplified schematic diagrams may be on more than one page. Primary purpose of simplified schematic diagrams is to supplement the block or detail schematic diagrams to provide a better understanding of the function or functions being performed. Simplified schematic diagrams are normally prepared for systems, sub-systems, or sub-sub-systems where the complexity is such that third level schematics do not enable easy understanding of the system (see Figures 22 and 23).

5.1.13.3 Detail schematic diagrams (third level). Detail schematic diagrams shall be prepared for each sub-sub-system except those of such simplicity that the interconnection diagrams provide complete technical and functional understanding. The primary purpose of the detail schematic diagram is to provide sufficient information for sub-sub-system maintenance. Each sub-sub-system diagram may consist of more than one page. Graphic presentation of line replaceable units shall be shown by two of the three types of graphic presentation (Figure 19) when transitioning from one energy media to another (see Figures 24 through 28).

5.1.13.4 Schematic diagram page numbering. Each page of the schematic diagram shall be assigned a four element number as described in 5.1.12.3 except the first element (data category prefix) shall be 12. Configuration codes (references 5.3.2) shall be placed in the schematic diagram page block below the page number as required. Within each sub-system or sub-sub-system grouping the diagrams shall be arranged with the block diagrams preceding the simplified diagrams which in turn precede the detail diagrams.

5.1.13.5 Schematic diagram arrangement. When practical, the diagram arrangement shall correspond to the equipment location

on the system. The preferred layout of a diagram is one in which energy flow is from left to right, top to bottom. Show system controls on the left and controlled items on the right. However, to utilize available space, it is permissible to deviate from this requirement.

5.1.13.6 Symbols and pictorials. Schematic diagrams of electromechanical systems, such as the Air Conditioning System, are to be drawn showing the mechanical and electrical relationships in an integrated presentation. Mechanical linkages are to be shown by dashed lines or by isometric, orthographic, or perspective pictorials where the clarity of the function is enhanced. Use recognizable pictorial items such as a reduced size panel face of a control module, the dial of an indicator or an antenna outline, to provide a bridge between theoretical circuit and physical installation for easier assimilation by non-system trained personnel, as well as a system specialist. Dial pictorials need not reflect power off status.

5.1.13.7 Lines. Schematic symbols and pictorials should be logically grouped, with each group located on the schematic so that the complete schematic requires a minimum number of signal flow paths and crossed lines. All lines shall be routed as directly as possible with a minimum number of zigzags. Use scattered ground symbols rather than long lines to a central ground. Large groups of lines that run parallel to each other should be in groups of 2 to 4 with double spacing between groups.

5.1.13.8 Line replaceable unit internal schematics. Internal simplified schematics or logic diagrams for LRUs shall be drawn for at least one of each different type of LRU shown on the detail schematic diagram page. Cross references to equipment in which the common internal circuitry is shown shall be placed within the LRU outline on the schematic. In lieu of this requirement on electronic units manufactured under ARINC specifications, word functions may be used provided that they agree with the specific ARINC report. (NOTE: An ARINC report or specification is a document that is prepared and published by Aeronautical Radio, Inc (ARINC), 2551 Riva Road, Annapolis MD 21401. ARINC develops standards for electronic equipment and systems for airlines.) Logic and electrical/electronic interlock circuits shall be symbolically presented. To assist function understanding, explanation by words may be used on the schematic. Antenna internal circuitry shall be shown.

5.1.13.9 Line replaceable unit sub-modules. Each input to output conversion of a sub-module shall be displayed with a minimum of electrical/electronic circuitry by showing it in symbolized form. The exact signal flow shall be displayed

between sub-modules and sub-sub-modules. Each sub-module and sub-sub-module shall be identified by its function description. Sub-modules and sub-sub-modules performing basic functions (amplifier, gates, oscillators, generators, motors, etc. - see Figure 24) shall not be shown in detail.

5.1.13.10 Cross reference. Cross reference information shall be indicated on all detail schematic diagrams where the complete connection to components such as relays, switches, transformers, etc., are not shown on one diagram, but must be continued on another schematic diagram. Cross reference shall be shown by printing the related system/sub-system/sub-sub-system number adjacent to the line that represents the interface with the other schematic diagram (for example: 34-10-03, A ---24-10-04).

5.1.13.11 Spare circuits. Spare circuits specifically assigned to a sub-sub-system shall be shown on the schematics.

5.1.13.12 Test points. Test points shall be shown to facilitate trouble shooting. Signal characteristics will be shown except when the characteristics are obvious. Inside the unit, the interface of BITE (Built In Test Equipment) test signals shall be indicated (reference Figure 27). In-line disconnects, terminal strips, and splices need not be shown on schematic diagrams except when used as test points unless otherwise specified. Test point identification shall be in accordance with ANSI Y14.15.

5.1.13.13 Signal identification. Signal path nomenclature and electrical or mechanical characteristics should be shown, if needed, for trouble shooting.

5.1.13.14 Signal values. Electrical signal or impedance values shall be shown, if required, to verify circuit function (in order to isolate trouble source). Show nominal and tolerance ranges.

5.1.13.15 Signal generation. The method of signal generation of sensors and transmitters shall be displayed in a simplified manner.

5.1.13.16 Power source. Power sources shall be shown as complete as possible on each schematic diagram. In the event this is impractical, the abbreviated power source details shall be drawn with dotted lines and a cross reference added to identify the schematic diagram on which the complete power source details are shown.

5.1.13.17 Line replaceable unit identification. Detail schematics diagrams shall show LRUs identified by their respective higher level designations (reference 5.2.2). Units of the system being presented shall be outlined with a solid line and identified by name and system higher level designation. Equipment identification shall be clearly stated adjacent to the symbols. If possible, the same nomenclature shall be used as shown on the placard in the system.

5.1.13.18 Line replaceable unit ratings. Ratings shall be included for line replaceable circuit breakers, fuses, resistors, capacitors, etc.

5.1.13.19 Relays and switches. Operation criteria of relay contacts and switches (both limit and manual) shall be shown adjacent to the contacts. A relay shall normally be shown in the de-energized condition. It shall be shown complete on the schematic that provides control of the coil or coils. Reference shall be made to all other schematics where the relay is shown.

5.1.13.20 Basic parts. Parts that perform a basic function need not be shown in detail as long as each function is defined by a symbol.

5.1.13.21 Unit outlines. LRU outlines shall be shown on all schematic diagrams except system block schematic diagrams with a heavy solid black outline. All interfacing sub-systems shall be identified with a crosshatch outline (see Figure 3).

5.1.13.22 Wiring diagram reference. Source wiring diagrams shall be listed on each detail schematic diagram. A rectangular box outline shall list all page numbers of affected wiring diagrams.

5.1.14 Equipment location diagrams. Equipment location diagrams shall be prepared to show the location and general shape of equipment racks, cabinets, consoles, panels, junction boxes, and bulkhead mounted electrical and electronic LRUs. A group of diagrams shall be prepared for each of the following categories of equipment installations.

1 - Instrument and control panels
2 - Electrical and electronic racks
3 - Junction boxes and bulkheads

System number 39 (reference Appendix A) shall be used to identify location diagrams. The first page or pages of each group shall show the location of all items in the category with respect to the vehicle outline and zones. Each rack, panel enclosure, etc., shown shall reference a succeeding page which

shall detail the LRUs contained therein (see Figures 29, 30, 31 and 32). Each item shown shall be identified by its assigned higher level designation (reference 5.2.2).

5.1.14.1 Aerospace vehicle zone coding. An aerospace vehicle shall be zoned for locations using the zone categories as follows:

5.1.14.1.1 Major zone.

1 - Fuselage, lower
2 - Fuselage, upper
3 - Empennage
4 - Power plants, nacelles, struts
5 - Left wing
6 - Right wing
7 - Landing gear and landing gear door
8 - Doors other than maintenance access doors
9 - Reserved

5.1.14.1.2 Sub-major zone. Major zones may be divided into sub-major zones which may be further divided into zones.

5.1.14.2 Equipment location diagram page numbering. Each page of the equipment location diagrams shall be assigned a four element number. The first element shall consist of the data category prefix 13 (reference 5.1). The second element shall consist of the system number 39 which shall be used for all equipment location diagrams. The third element shall consist of a two digit number. The most significant digit shall identify the equipment category. The least significant digit of the third element shall identify the major zone location in the vehicle (reference 5.1.14.1). The fourth element shall consist of a two digit number assigned sequentially beginning with 01 (see the following example).

13	-	39	-	12	-	01
(a)		(b)		(c)(d)		(e)

a. Data category prefix (for equipment location diagrams)

b. System number (for equipment locations)

c. Equipment category (instrument and control panels)

d. Major zone (upper fuselage)

e. 1st page (of equipment location diagrams for instrument and control panels located in the upper fuselage zone)

Configuration codes (reference 5.3.2) shall be placed in the page number block below the page number as applicable.

5.1.15 Wire harness location diagrams. Wire harness location diagrams shall be prepared to show the relative location and routing of all wire harnesses. These pages shall consist of isometric or orthographic single line drawings and shall show harness numbers, harness connector higher level designations and the approximate or relative locations of connector, harnesses, raceways, conduits and pressure seals (see Figure 33). Electromagnetic susceptible or interference generating harnesses shall be noted. A group of diagrams shall be prepared for each major zone of the vehicle (reference 5.1.14.1). The first page of the wire harness location diagrams shall illustrate and identify the major zones of the aerospace vehicle and shall also reference succeeding pages which shall detail wire harness locations.

5.1.15.1 Wire harness location diagram page numbering. Each page of the wire harness location diagrams shall be assigned a four element number. The element shall consist of the data category prefix 14 (reference 5.1). The second element shall consist of system number 91 which shall be used for all wire harness location diagrams. The third element shall be assigned a two digit number consisting of the system's major zone code (reference 5.1.14.1). The fourth element shall consist of a two digit number assigned sequentially beginning with 01 (see the following examples).

14	-	91	-	60	-	01
(a)		(b)		(c)(d)		(e)

a. Data prefix category (for wire harness location diagrams)

b. System number (for wire harness locations)

c. Major vehicle zone (right wing)

d. Sub-division of major zone (none)

e. 1st page of right wing harness location diagrams

14	-	91	-	00	-	01
(a)		(b)		(c)(d)		(e)

a. Data category prefix (for wire harness location diagrams)

b. System number (for wire harness location)

c. Major zone (entire vehicle)

d. Sub-division of major zone (none)

e. 1st page of wire harness location diagrams (identifies and illustrates major zones of the system)

5.2 System coding method (aerospace system). The system coding method, a form of the Unit Numbering Method (IEEE STD 200), serves as a higher level designation to identify system, sub-systems, sub-sub-systems and items. This higher level designation shall be used to identify LRUs within the aerospace system in lieu of vendor reference designations.

5.2.1 System sub-division and higher level designations. All functional systems shall be sub-divided into sub-systems and all functions within each sub-system shall be divided into sub-sub-systems. If within a functional system there is only one group of equipment (i.e., sub-division into two or more sub-sub-systems is not appropriate), that group of equipment shall be treated as a sub-sub-system of the functional system. Each functional system, sub-system, and sub-sub-system shall be assigned an individual code number. These numbers are to be used in the assignment of higher level designations. Each functional system shall be assigned a four digit identification number. The first two digits shall be selected from Appendix A. The last two digits shall be zeros. For example:

2300 - Communications System

Each sub-system shall be assigned a four digit code number. The two most significant digits identify the functional system and the two least significant digits identify the sub-system. The four digit code shall be selected from Appendix A (see the following examples).

2310 - HF Radio
2320 - VHF/UHF Radio
2330 - Passenger Address
2340 - Interphone
2350 - Audio Integrating
2360 - Static Discharge
2370 - Audio/Video Monitoring

Each sub-sub-system shall be assigned a four digit code identification number. The three most significant digits shall consist of the assigned system and sub-system number. The least

significant digit shall be arbitrarily assigned sequentially beginning with 1 (see the following example).

2311 - High Frequency Communication Sub-Sub-System

5.2.2 Line replaceable unit (LRU) higher level designations. Higher level designations (system coded) shall be assigned to all LRUs and equipment enclosures except wire harnesses and static ground points. These designations shall be used for identifying and locating items on diagrams and in the aerospace system. They shall also be used for correlating items in the aerospace system, with graphic symbols on diagrams and items in the list pages, the circuit descriptions and the instructions. Higher level designations, assigned by the aerospace system manufacturer, shall be substituted for the reference designations assigned by the equipment manufacturers. Higher level designations assigned to LRUs shall consist of a functional system, sub-system, sub-sub-system, equipment class letter(s), a sequentially assigned number, and a suffix letter when applicable (see the following example).

23	2	1	P	12	A
(a)	(b)	(c)	(d)	(e)	(f)

a. Functional system number (assigned from Appendix A)

b. Sub-system number (assigned from Appendix A)

c. Sub-sub-system number (reference 5.2.1)

d. Equipment class letter (reference 5.2.3)

e. Connector unit number (assigned sequentially within each functional system beginning with the number 1; reference 5.2.4)

f. Multiple element unit suffix (reference 5.2.5)

Mechanical parts, such as cams, drums, torque tubes, pedals, levers, etc., need not have higher level designations assigned.

5.2.2.1 Line replaceable unit (LRU) system coding. Except as specified in 5.2.2.2 through 5.2.6, each LRU shall be assigned to a sub-sub-system. An LRU which interfaces between two or more sub-sub-systems shall be assigned to the sub-sub-system to which it is most functionally related.

5.2.2.2 Equipment enclosure system coding. Enclosures, consoles, and junction shields which cannot be reasonably

assigned to a sub-sub-system shall be assigned to the functional system number 39 (see the following example).

39	-	22	-	A	-	2
(a)		(b)(c)		(d)		(e)

a. System number (electrical/electronic enclosures)

b. Sub-system number (equipment racks - reference 5.1.14)

c. Aerospace system zone location (reference 5.1.14.1)

d. Class letter (A - equipment rack)

e. 2nd general purpose electrical/electronic equipment rack in aerospace system zone 2

5.2.2.3 Connector system coding. Connectors which mate to line replaceable units shall be assigned the same system code number as that of the mating unit. In-line connectors which are part or predominately part of a specific sub-sub-system shall use the applicable sub-sub-system number. In-line connectors which cannot be reasonably assigned to a specific sub-sub-system shall be assigned the functional system number of which it is a part or more predominately a part. In-line bulkhead installed connectors not predominately a part of a functional system shall be coded according to procedures in 5.2.2.2.

5.2.2.4 Terminal boards system coding. Terminal boards installed in equipment enclosures shall use the same system code number assigned to the enclosure. Other terminal boards shall be assigned the number of the sub-sub-system to which each is predominately applicable.

5.2.2.5 Relay system coding. Relays shall utilize the same code number as the energizing sub-sub-system.

5.2.2.6 Fluid parts system coding. Fluid parts such as filters, actuators, conditioners, reservoirs, etc., shall be assigned class letters from Table II or IEEE STD 315. When a direct electrical connection is not made, the fluid part designation may be shown only on the schematic diagram. For example an electrically activated fluid valve reference designator would be shown on both the wiring diagram and schematic diagram. A reference designator for a fluid filter for a hydraulic fluid controlled valve would only be shown on a schematic diagram.

5.2.2.7 Splice system coding. Wiring splices or groups of splices shall be assigned the class letter SA and a system number that indicates the location in the system. For example:

3935SA1	Left Wing Junction Box Splice Area 1

5.2.2.8 Ferrule system coding. Each ferrule shall be assigned the same designator as the LRU to which the shielded wire, on which the ferrule is installed, connects. For example:

3441FR1	First Ferrule of Weather Radar System

5.2.3 Class letter. The letters identifying the class of an item shall be selected in accordance with the lists of IEEE STD 315 and Table II. For items not specifically listed, use the letters already assigned for the most similar class of items. The letters "A" and "U" (for assembly) shall not be used if more specific class letters are assigned for a particular item. NOTE: Certain item names and class designating letters may apply to either a part or an assembly.

Connector higher level designation class letters shall be assigned in accordance with the following principles:

a. The movable (less fixed) connector of a mating pair shall be designated "P".

b. The stationary (more fixed) connector of a mating pair shall be designated "J".

c. If two flexible cables are connected, the connector containing pins shall be designated "J".

5.2.4 Unit number identifier. Each LRU within each system identification number and class letter group shall be assigned a sequential unit number beginning with 1 and not to exceed three digits. Mating in-line connectors, "J" and "P", shall be assigned the same unit number regardless of sequence. Within each system identification number and class letter group, use of an identical part number in more than one location requires assignment of a different unit number to each identical part number. Plug-in parts or assemblies with the same part number which have multiple application and do not have terminations for wiring, coax, piping, etc., may have the same number (for example: light bulbs, fuses). Each lamp socket assembly, fuse holder, etc., shall have a unique number. Interchangeable or optional parts applicable to the same location shall be assigned the same number.

TABLE II

REFERENCE DESIGNATORS (SYSTEM CODED)

CO	antenna coupler
CT	control unit control panel selector panel
CM	computer processing unit
CY	encryption device
EC	end cap
FD	fluid connector fluid disconnect
FF	fluid fuse
FP	fluid pump fluid turbine motor (non-electrical)
FR	fluid reservoir fluid accumulator fluid storage bottles ferrule
FS	fluid conditioners fluid separator heat exchanger fluid filter
FT	feed through
FU	fluid replaceable item filter element chip detector
FV	fluid control fluid valve fluid regulator fluid restrictor
GD	ground point
GS	ground stud
JB	junction box
MX	multiplex unit
PL	panel, circuit breaker/ instrument enclosure, wire terminating junction box, wire bulkhead
PT	pigtail
RC	recording unit reproducing unit
SA	splice area
SP	splice
TE	teletypewriter
TS	transceiver
Z	signal conditioning tuning unit

5.2.5 Suffix letter. A suffix letter, beginning with A, shall be added to the basic higher level designation to identify each portion of a multiple element unit. These elements may be removable printed circuit boards or connectors containing more than one integral jack or plug. The letters I, O, Q, S, X, and Z shall not be used. For example:

(2311P19)	(2311P20)
2311 - System identification number	2311 - System identification number
P - Class letter group	P - Class letter group
19 - Unit number	20 - Unit number
2311P19A - Connector element A	2311P20 - Connector
2311P19B - Connector element B	2311P20A - Connector backshell
2311P19C - Connector shell	
Multi element (plug & shell) connector	Multi element (plug & backshell) connector

5.2.6 Ground point designation. Each interconnect wiring ground point shall be assigned a reference designation. The ground point designation is intended for ground point identification in wire harness lists, in connection lists, and on diagrams. The ground point designation shall consist of the designation GD, and a number identifier not to exceed four digits. Each ground point on the airframe structure shall be assigned a number. These numbers may be grouped and assigned to areas and need not be assigned sequentially.

5.3 Page identification. All pages shall contain the drawing number, federal supply code for manufacturer, latest revision letter applicable to the page, and the vehicle type and model. The requirements of ANSI Y14.1 do not apply to the page (sheet) numbering described in this standard.

5.3.1 Page titles. Each page shall contain the applicable title listed in 5.1. List pages, diagram pages, and wiring modification data index pages shall include title modifiers following the basic page title which further describes the specific page content. Title modifier shall be included on diagram index pages when the index is sectionalized.

5.3.2 Configuration code. Configuration variations are shown in the data specified in this standard, by two methods. Variations may be shown by serialization of applicability of data on each page (separate page variations may be made of a given page) or by the use of a configuration code which represents a specific configuration.

5.3.2.1 Diagrams. Except for minor variations suitable for explanation by means of local or coded notes, configuration differences shall be shown by use of separate pages for each configuration. The configuration code element shall be placed below the page number in the "page" block of the data. The configuration code included as a fifth element in the "page" block shall be different for each separate page. The aerospace system manufacturer's configuration code shall begin with Config 001 and be assigned through Config 499 for both production and modification. The management activities configuration code shall begin with Config 500 and be assigned through Config 999.

5.3.2.2 Lists. The preferred method for showing configuration variations within the equipment lists, the wire harness lists, and the connection lists shall be by specifying the serialization and applicability within the data on each page. Separate pages with configuration code page number elements may be used when this method is more appropriate and does not result in a significant increase in the total number of pages required. If the configuration code method is used, the index of (production/effective) diagrams (reference 5.1) shall be retitled "Index of (production/effective) Diagrams and Lists". All list pages would then be indexed in the same manner as diagram pages. When a list utilizes the preferred preparation method with serialization applicability shown within each data page and different versions of that list are required to correspond to separate technical publication for different system series or models, configuration code numbers shall be added to differentiate those pages applicable to each publication.

5.3.2.3 Diagram indexes. When separate wiring data or schematic diagram technical publication are to be issued for different system series or models, a separate group of index pages shall be prepared to correspond to each maintenance manual. When this is required, configuration code numbers shall be added to differentiate those pages applicable to each publication.

5.4 Wire identification. The wire identification system shall be a non-significant (non-function) system in accordance with MIL-W-5088.

5.5 Electromagnetic compatibility categories. Procedures shall be established to form categories for wires and cables according to interference and susceptibility characteristics, and an identifying code shall be established for each category. Complete explanation of categories and identifying codes including separation nomographs, if applicable, shall be included in the general information section. Each wire shall be assigned the appropriate category identifer and the identifier

shall be shown in the applicable wire harness list. The identifying code shall not be imprinted on the wire.

5.6 Wire type code. A system of alphabetic codes shall be established to identify type of wire or cable by specification, type, class, number of conductors, etc., but excluding gauge. The codes shall consist of not more than three alphabetic characters. The letters I, O, Q, S, X, and Z shall not be used. The codes and associated wire type descriptors shall be listed in the general information section of the drawing. The code applicable to each wire shall be entered in the wire type column of the wire harness list. Buss bars on terminal boards shall be identified.

5.7 Wiring/equipment modifications. A wiring/equipment modification is any addition, deletion, or alteration of the system's wiring or equipment made subsequent to original production of the system. Each modification shall be separately identified and modification data shall be prepared. The data developed for each modification in accordance with this standard shall reflect the exact configuration of the system after modification and, in addition, sufficient data shall be prepared to accomplish the change.

5.7.1 Wiring/equipment modification identification. Each modification shall be identified by a modification number assigned in numerical sequence and by a descriptive title. The number and title of each modification shall be entered in the index of modifications.

5.7.2 As installed data. As installed data consists of complete new diagram pages, new or revised list and general information pages and revised index pages as are required to depict the exact configuration of the system after the modification has been performed. A separate modification data index shall be prepared for each modification and shall list all as installed data applicable to the modification. Each modification data index shall be listed in the index of modifications and shall be called out on the top drawing of the modification.

5.7.3 Installation data. Installation data consists of drawings and diagrams which provide information necessary to accomplish the addition, deletion, or alteration of the wiring or equipment. Modification installation data is not to be a part of the wiring data book-form drawings for the system and shall be assigned independent drawing numbers. This installation data shall be called out on the top drawing of the modification. In minor modifications, it may be possible for the modification to be performed by reference to the as installed data and installation data will not be required.

5.8 Revisions. A revision is any change or addition to the drawing after its release. Revisions shall be identified in accordance with DOD-STD-100 except as noted in 5.1.2 of this standard. All changes incorporated at the same time shall be identified by the same revision letter. Each revision shall be entered in the revisions section as specified in 5.1.2 and the revision letter (letters I, O, Q, S, X, and Z shall not be used) shall be entered in the revision letter block of each revised page or new page added by the change. The title page shall always bear the latest revision letter assigned to the drawing. A revision column shall be included at the left side of each index and list page and when a line is added or revised, the applicable revision letter shall be entered in this column (see Figures 5 through 13).

Custodian:
Army - AV
Navy - AS
Air Force- 99

Reviewer:
Air Force - 99, 16, 11, 85, 13, 91
Navy
Army - AR

User:
Air Force
Navy
Army

Preparing Activity:
Air Force - 99

Project Number:
DRPR -0218

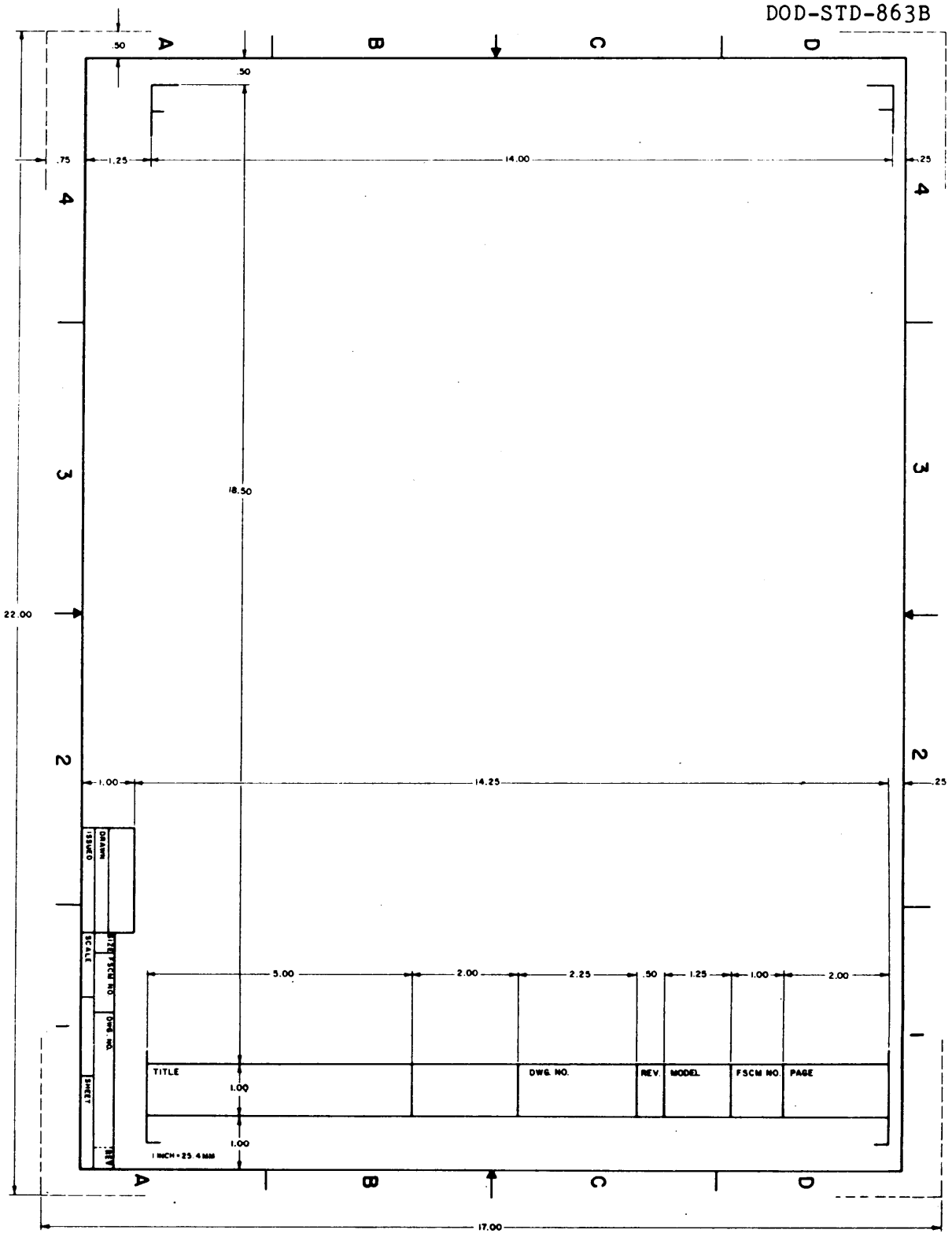

FIGURE 1. DRAWING FORMAT (C SIZE)

THIS SAMPLE DRAWING IS INFORMATIONAL ONLY AND COMPLETE TO THE DEGREE NECESSARY TO ILLUSTRATE A TYPE OF DRAWING. ACTUAL FORMAT AND DRAWING SHALL CONFORM TO THE TEXTUAL REQUIREMENTS SET FORTH IN THIS STANDARD.

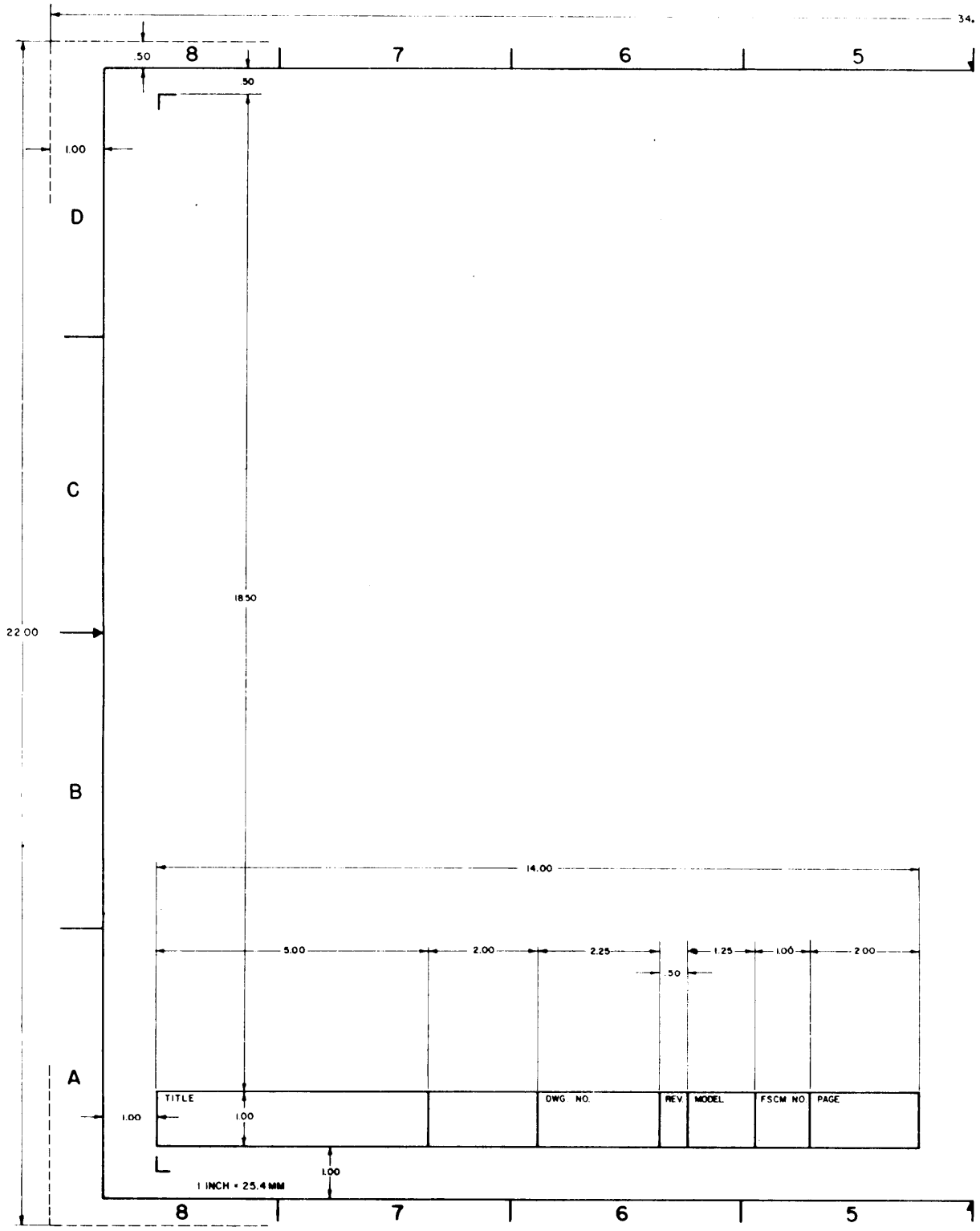

FIGURE 2. DRAWING FORMAT (D SIZE) (SHEET 1 OF 2)

THIS SAMPLE DRAWING IS INFORMATIONAL ONLY AND COMPLETE TO THE DEGREE NECESSARY TO ILLUSTRATE A TYPE OF DRAWING. ACTUAL FORMAT AND DRAWING SHALL CONFORM TO THE TEXTUAL REQUIREMENTS SET FORTH IN THIS STANDARD.

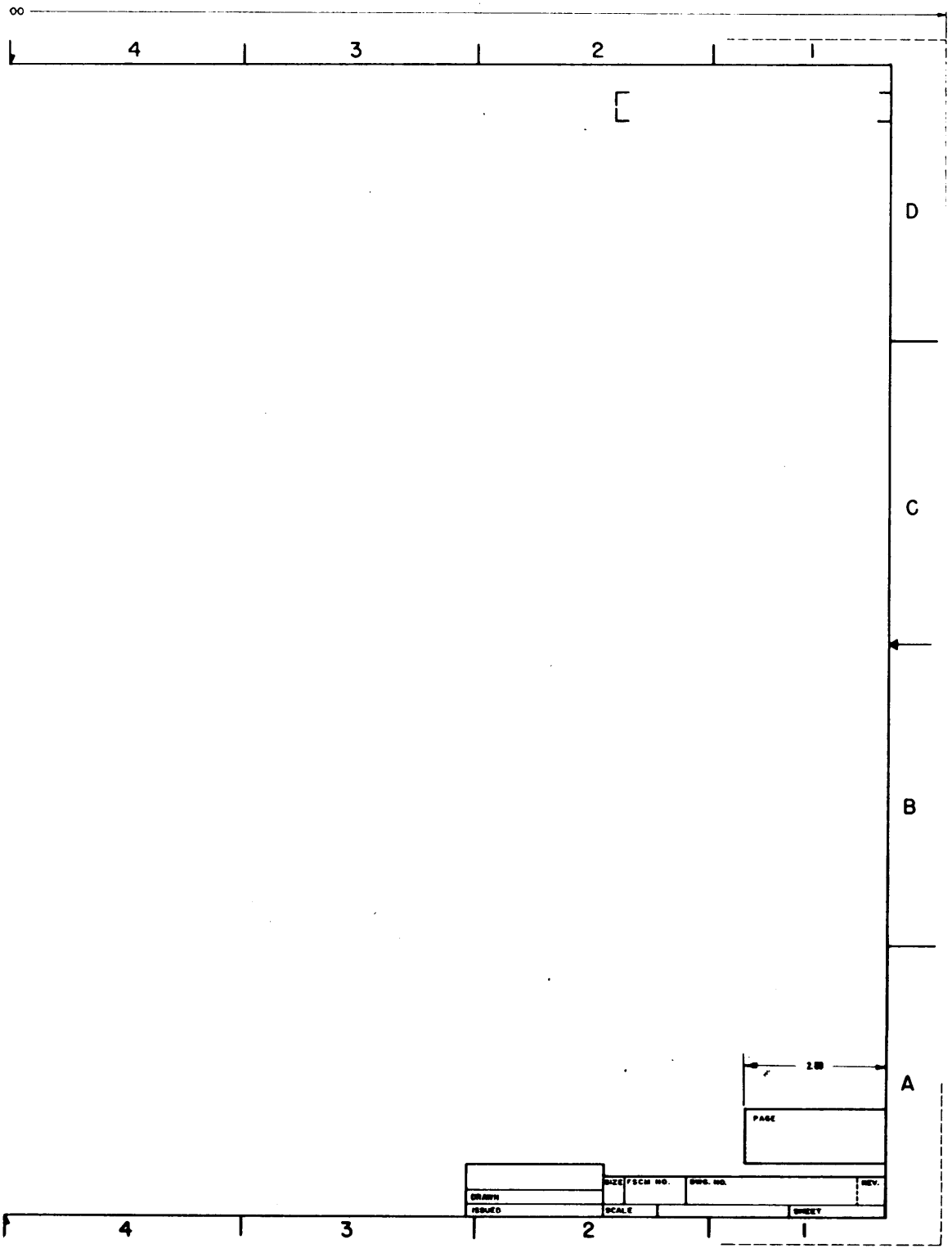

FIGURE 2. DRAWING FORMAT (D SIZE) (SHEET 2 OF 2)

THIS SAMPLE DRAWING IS INFORMATIONAL ONLY AND COMPLETE TO THE DEGREE NECESSARY TO ILLUSTRATE A TYPE OF DRAWING. ACTUAL FORMAT AND DRAWING SHALL CONFORM TO THE TEXTUAL REQUIREMENTS SET FORTH IN THIS STANDARD.

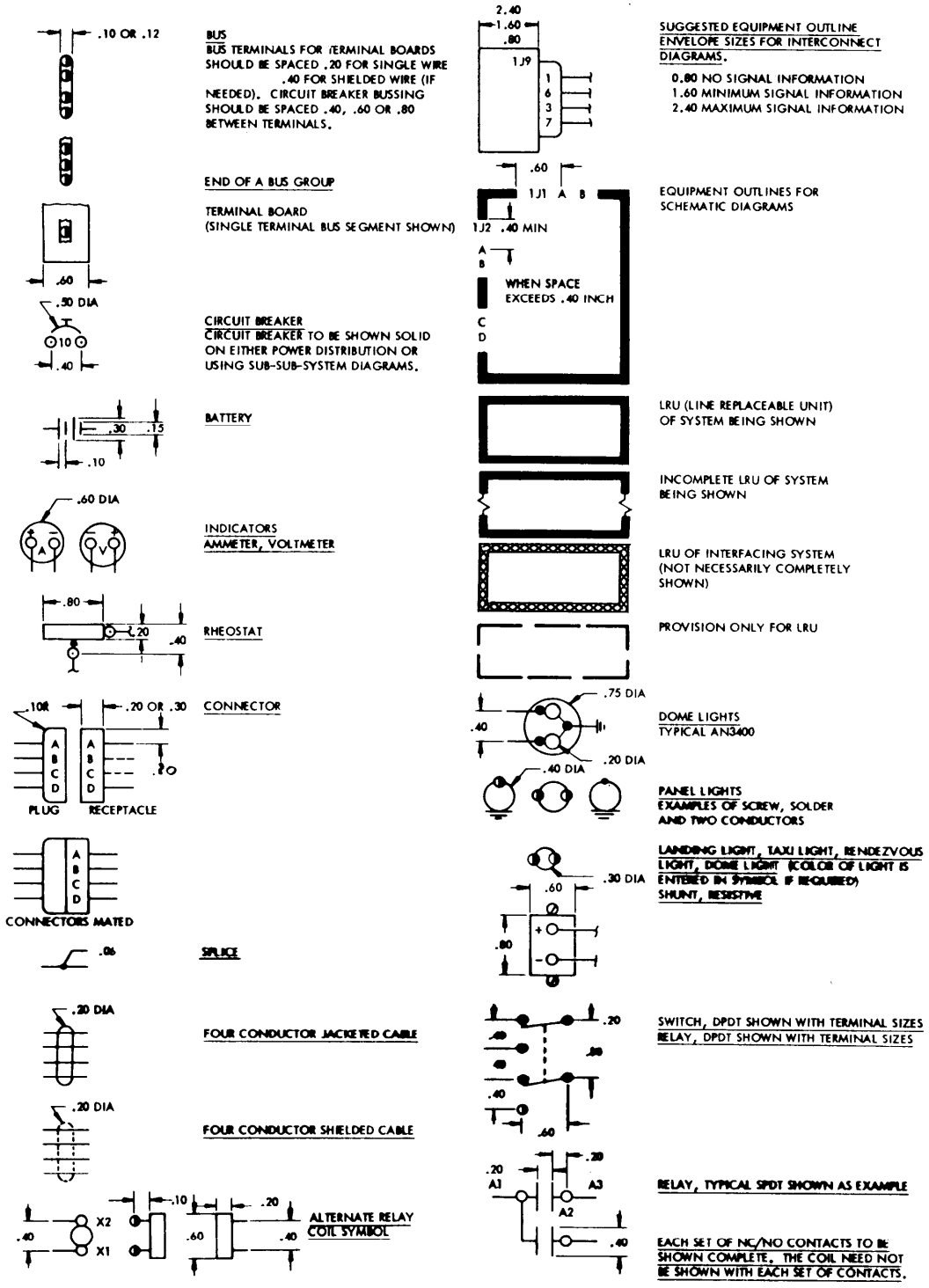

FIGURE 3. DIMENSIONS FOR COMMON GRAPHIC SYMBOLS

THIS SAMPLE DRAWING IS INFORMATIONAL ONLY AND COMPLETE TO THE DEGREE NECESSARY TO ILLUSTRATE A TYPE OF DRAWING. ACTUAL FORMAT AND DRAWING SHALL CONFORM TO THE TEXTUAL REQUIREMENTS SET FORTH IN THIS STANDARD.

REVISIONS			
REV	DESCRIPTION	DATE	APPROVAL

FOR COMPLETE REVISION RECORD,
SEE THE REVISION PAGES FOLLOWING THE
TITLE PAGE. THE REVISION LETTER SHOWN
IS THE CURRENT CHANGE LETTER.

XC-555A
STRATEGIC FREIGHTER

CONTRACT NUMBER	UNIT NUMBERS
XXXXXXXXXXXXX	001-003
XXXXXXXXXXXXX	004-012
XXXXXXXXXXXXX	013-049
XXXXXXXXXXXXX	050-110
XXXXXXXXXXXXX	111-150
XXXXXXXXXXXXX	150-178

DRAFTSMAN Joe Green	DATE 10 Dec 1975	MIL-STD AIRCRAFT COMPANY 54321 INDUSTRIAL BOULEVARD BUGTUSSLE, OKLAHOMA 73145
CHECKER Edward Smyle	10 DEC 1975	WIRING DATA AND SYSTEM SCHEMATIC DIAGRAMS
DESIGN ENGR Alan Whitty	10 DEC 1975	
DESIGN ACTIVITY AUTHENTICATION (NAME, SYMBOL AND DATE) Ron Stevens 10 DEC 1975		SIZE A · FSCM NO. 00000 · DWG NO. 555-00010 · REV BF
		SCALE · SHEET

FIGURE 4. TITLE PAGE

THIS SAMPLE DRAWING IS INFORMATIONAL ONLY AND COMPLETE TO THE DEGREE NECESSARY TO ILLUSTRATE A TYPE OF DRAWING. ACTUAL FORMAT AND DRAWING SHALL CONFORM TO THE TEXTUAL REQUIREMENTS SET FORTH IN THIS STANDARD.

REV	CHANGE DESCRIPTION	DATE	APPROVED
			ENGR BUD ELIOUTT APPROVED S. WATKINS, L. LAMM APPROVED P. HUGHES, K. DUNCAN
A	ORIGINAL RELEASE	4 JANUARY 75	
B	SEE ECO 2 - MC-1 AUTO PILOT MOD	8 MARCH 75	L. LAMM
C	SEE ECO 3 - AN/ARC - 58 MOD	15 APRIL 75	C. FRICKE
D	SEE ECO 4 - DUAL FLIGHT CONTROL/RGA INSTL	7 MAY 75	P. HUGHES
E	SEE ECO 5 - AN/ASQ-141 SWITCH INSTL	2 SEPTEMBER 75	K. DUNCAN
F	SEE ECO 6 - AN/ASQ-141 COOLING BLOWER INSTL	30 SEPTEMBER 75	R. WIEHL
G	WILL NOT BE RELEASED		
H	SEE ECO 8 - AN/ARC-89 COMM SYSTEM INSTL	14 OCTOBER 75	S. WATKINS
J	SEE ECO 9 - AN/ART-42 TRANSMITTER MOD	9 MARCH 76	J. DUNCAN
K	SEE ECO 10 - AN/ASN-6 POWER SW INSTL	29 APRIL 76	A. KECK
L	SEE ECO 11 - INSTL OF INTERPHONE STATION	1 JULY 76	W. SCHULTZ
M	SEE ECO 12 - SECOND AN/ARC-100 RADIO INSTL	25 AUGUST 76	CHET LOWE
N	SEE ECO 13 - AN/ARN-1 TACAN INSTL	27 OCTOBER 76	B. ADAMS
P	SEE ECO 14 - AR-200 RECORDER REMOVAL	11 NOVEMBER 76	C. SCROGGS
R	SEE ECO 15 - NICKEL CADMIUM BATTERY INSTL	15 DECEMBER 76	M. WRIGHT
T	SEE ECO 16 - LANDING GEAR BRAKE ROD MD2	8 MARCH 77	E. MEZYDLO
U	SEE ECO 18 - AN/ARN-30 EMERGENCY KEYER REMOVAL	29 APRIL 77	E. MULKEY
V	SEE ECO 19 - FLAG ALARM LOADING RESISTOR RELOCATION	1 JULY 77	J. ANDERSON
W	SEE ECO 20 - VDR - TACAN SWITCHING MOD	25 AUGUST 77	M. DELISIO
Y	SEE ECO 21 - CAPACITOR INSTL - GROUND SERVICE INTERPHONE SYSTEM	13 SEPTEMBER 77	V. ELKINS
AA	SEE ECO 23 - RADIO MAGNETIC INDICATOR REVISION	7 OCTOBER 77	R. FERMAN
AB	SEE ECO 24 - AN/ARC-60 WIRING REVISION	10 DECEMBER 77	R. PHIPPS
AC	SEE ECO 25 - FOURTH ALTERNATOR INSTL	21 JANUARY 78	J. GREEN
AD	SEE ECO 26 - AN/APN-100 LORAN INSTL	22 MARCH 78	B. MAYFIELD
AE	SEE ECO 27 - AN/APQ-250 RADAR INSTL	27 MAY 78	R. SMITH
AF	SEE ECO 28 - AIRBORNE PERFORMANCE MONITOR INSTL	9 JULY 78	M. BROWN
AG	SEE ECO 29 - ADDITIONAL INTERPHONE STA (PASSENGER)	18 SEPTEMBER 78	D. BROWN
AH	SEE ECO 30 - UHF RADIO RELAY SYSTEM MOD	21 NOVEMBER 78	L. WRIGHT
AJ	SEE ECO 31 - AUTO PILOT SYSTEM MOD	6 JANUARY 79	T. DIERDA
AK	SEE ECO 32 - SATELLITE COMMUNICATIONS TERMINAL GROUP INSTALLATION	22 JANUARY 79	G. GREEN
AL	SEE ECO 33 - AIRCRAFT LIGHTING MOD	19 FEBRUARY 79	T. ENDRES
AM	SEE ECO 34 - AN/AIC-20 INTERPHONE REVISION	7 APRIL 79	R. BIRD
AN	SEE ECO 35 - MULTICHANNEL RECORDER INSTL	8 JULY 79	C. DAY
AP	SEE ECO 36 - REMOVAL OF AN/APN-100 LORAN	19 AUGUST 79	J. WEISIGER
AR	SEE ECO 37 - SECURE SPEECH SYSTEM INSTL	4 SEPTEMBER 79	M. OVERMAN
AT	SEE ECO 38 - CREW ENTRANCE LIGHT INSTL	27 SEPTEMBER 79	M. MITCHELL
AU	SEE ECO 39 - ANTI SKID BRAKE SYSTEM INSTL	8 DECEMBER 79	S. MILKOWSKI
AV	SEE ECO 40 - J800 ENGINE INSTL	5 FEBRUARY 80	B. FROST
AW	SEE ECO 41 - AUXILIARY POWER UNIT INSTL	18 APRIL 80	D. GORDON
AY	SEE ECO 42 - AN/APN-300 DOPPLER RADAR INSTL	9 AUGUST 80	M. KROPP
BA	SEE ECO 43 - WATER HEATER POWER DISTRIBUTION SYSTEM INSTL	10 OCTOBER 80	K. DUNCAN

TITLE: REVISION RECORD	DRAWING NUMBER	REV	DATE	MODEL	FSCM NO.	PAGE NUMBER
	555-00010	BA	10 OCT 1980	XC-555A	00000	1-0001-00

FIGURE 5. REVISION RECORD

THIS SAMPLE DRAWING IS INFORMATIONAL ONLY AND COMPLETE TO THE DEGREE NECESSARY TO ILLUSTRATE A TYPE OF DRAWING. ACTUAL FORMAT AND DRAWING SHALL CONFORM TO THE TEXTUAL REQUIREMENTS SET FORTH IN THIS STANDARD.

PAGE TITLE PAGE	REV	.PAGE	REV	.PAGE	REV	.PAGE	REV	.PAGE	REV	.PAGE	REV	.PAGE	REV
REVISION RECORD													
1-0001-00	R	1-0001-01	BF	1-0002-00	BF	1-0003-00	BF	---------	-				
CONTENTS RECORD													
2-0001-00	BF	2-0002-00	BF	2-0003-00	BF	2-0004-00	BF	2-0005-00	BF	2-0006-00	BF		
GENERAL INFORMATION													
3-0001-00	A	3-0002-00	A	3-0003-00	H	3-0004-00	F	3-0005-00	A	3-0006-00	A	3-0007-00	A
3-0008-00	H	3-0009-00	AA	3-0010-00	BA	3-0011-00	BD	3-0012-00	BF	3-0013-00	BF	3-0014-00	A
INDEX OF PRODUCTION DIAGRAMS													
4-11-21-01	F	4-11-22-01	F	4-11-23-01	F	4-11-23-02	F	4-11-24-01	F	4-11-24-02	F	4-11-24-03	F
4-11-26-01	F	4-11-27-01	F	4-11-28-01	F	4-11-29-01	F	4-11-33-01	F	4-11-34-01	F	4-11-34-02	F
4-11-34-03	F	4-11-43-01	G	4-11-72-01	F	4-12-21-01	F	4-12-22-01	F	4-12-23-01	F	4-12-23-02	F
4-12-24-01	F	4-12-26-01	F	4-12-27-01	F	4-12-28-01	F	4-12-29-01	F	4-12-33-01	F	4-12-33-02	F
4-12-34-01	F	4-12-43-01	G	4-12-72-01	F	4-13-21-01	F	4-13-22-01	F	4-13-23-01	F	4-13-23-02	F
4-13-24-01	F	4-13-26-01	F	4-13-27-01	F	4-13-28-01	F	4-13-29-01	F	4-13-33-01	F	4-13-33-02	F
4-13-34-01	F	4-13-43-01	G	4-13-72-01	F	4-14-00-01	F	----------	-				
INDEX OF EFFECTIVE DIAGRAMS													
5-11-21-01	G	5-11-22-01	BA	5-11-23-01	BF	5-11-23-02	H	5-11-24-01	H	5-11-24-02	H	5-11-24-03	H
5-11-26-01	H	5-11-27-01	H	5-11-28-01	H	5-11-29-01	H	5-11-33-01	H	5-11-34-01	H	5-11-34-02	H
5-11-34-03	H	5-11-43-01	H	5-11-72-01	H	5-12-21-01	H	5-12-22-01	H	5-12-23-01	H	5-12-23-02	H
5-12-24-01	H	5-12-26-01	H	5-12-27-01	H	5-12-28-01	H	5-12-29-01	H	5-12-33-01	H	5-12-33-02	H
5-12-34-01	H	5-12-43-01	H	5-12-72-01	H	5-13-21-01	H	5-13-22-01	H	5-13-23-01	H	5-13-23-02	H
5-13-24-01	H	5-13-26-01	H	5-13-27-01	H	5-13-28-01	H	5-13-29-01	H	5-13-33-01	H	5-13-33-02	H
5-13-34-01	H	5-13-43-01	H	5-13-72-01	H	5-14-00-01	H	----------	-				
INDEX OF MODIFICATIONS													
6-0001-00	AT	6-0002-00	BF	6-0003-00	BF	---------	-						
MODIFICATION DATA INDEX													
7-0001-01	G	7-0002-01	M	7-0003-01	N	7-0004-01	P	7-0005-01	R	7-0005-02	R	7-0005-03	AM
7-0006-01	S	7-0007-01	T	7-0008-01	U	7-0009-01	V	7-0010-01	W	7-0011-01	AA	7-0011-02	AP
7-0012-01	AT	7-0013-01	BA	7-0014-01	BE	7-0015-01	BF	7-0015-02	BF	7-0015-03	BF	7-0015-04	BF
CONNECTION LIST													
8-21-10-01	G	8-22-10-01	H	8-22-30-01	H	8-23-10-01	G	8-23-20-01	G	8-23-30-01	G	8-23-30-02	G
8-24-50-01	G	8-24-50-02	G	8-26-10-01	G	8-27-60-01	G	8-28-20-01	G	8-28-30-01	G	8-28-30-02	G
8-29-10-01	H	8-33-10-01	BA	8-33-20-01	Y	8-33-40-01	G	8-34-10-01	G	8-34-10-02	G	8-34-10-03	G
8-34-20-01	H	8-34-30-01	AA	8-34-50-01	AM	8-43-10-01	H	8-43-20-01	H	8-43-20-02	G	8-43-30-01	G
8-43-30-01	H	8-43-30-02	H	8-43-50-01	G	8-72-50-01	H	----------	-				
WIRE HARNESS LIST													
9-0001-01	G	9-0001-02	G	----------	-	(THIS LIST WOULD CONTINUE UNTIL ALL WIRE HARNESS HAS BEEN LISTED. THE LAST WIRE HARNESS MIGHT BE 9-2126-01 REV G. THIS WOULD BE THE 2126 WIRE HARNESS OF THE AEROSPACE VEHICLE.)									
EQUIPMENT LIST													
10-21-10-01	G	10-22-10-01	H	10-22-30-01	H	10-23-10-01	G	10-23-20-01	G	10-23-20-02	G	10-23-30-01	G
10-24-50-01	G	10-26-10-01	G	10-27-60-01	G	10-28-10-01	G	10-29-10-01	H	10-29-10-02	G	10-29-10-03	G
10-33-10-01	BA	10-33-20-01	G	10-33-40-01	G	10-32-10-01	G	10-34-20-01	H	10-32-20-02	G	10-32-20-03	G
10-34-30-01	AA	10-34-50-01	AM	10-43-10-01	H	10-43-20-01	H	10-43-30-01	H	10-43-30-02	G	10-43-40-01	G
10-43-50-01	G	10-72-50-01	H	----------	-								
INTERCONNECTION DIAGRAMS													
11-21-10-01	G	----------	-	(A NUMERICAL LISTING OF ALL INTERCONNECTION DIAGRAMS IS REQUIRED.)									
SYSTEM SCHEMATIC DIAGRAMS													
12-21-10-01	G	----------	-	(A NUMERICAL LISTING OF ALL SYSTEM SCHEMATIC DIAGRAMS IS REQUIRED.)									
EQUIPMENT LOCATION DIAGRAMS													
13-39-10-01	G	----------	-	(A NUMERICAL LISTING OF ALL EQUIPMENT LOCATION DIAGRAMS IS REQUIRED.)									
WIRE HARNESS LOCATION DIAGRAMS													
14-91-10-01	G	----------	-	(A NUMERICAL LISTING OF ALL WIRE HARNESS LOCATION DIAGRAMS IS REQUIRED.)									

TITLE:	.DRAWING NUMBER	.REV	.DATE	.MODEL	.FSCM	.PAGE
CONTENTS RECORD	.555-00010	.BF	.29 FEB 1982	.XC-555A	.00000	.2-0001-00

FIGURE 6. CONTENTS RECORD

THIS SAMPLE DRAWING IS INFORMATIONAL ONLY AND COMPLETE TO THE DEGREE NECESSARY TO ILLUSTRATE A TYPE OF DRAWING. ACTUAL FORMAT AND DRAWING SHALL CONFORM TO THE TEXTUAL REQUIREMENTS SET FORTH IN THIS STANDARD.

REV	DIAGRAM TITLE	DIAGRAM NUMBER	--DIAGRAM--- CONF	PGS	REV	CHANGE DIRECTIVE	EFFECTIVITY
B	GENERATOR DRIVE - CSD AND DISCONNECT	11-24-11-01	001		A		001-068
B		11-24-11-01	002		B		069-SUB
T	GENERATOR DRIVE - CSD OIL COOLING	11-24-12-01	004		T		001-SUB
D	GENERATOR DRIVE - CSD OIL TEMP INDICTION	11-24-13-01	001		D		001-SUB
A	GENERATOR DRIVE - CSD OIL PRESSURE IND	11-24-14-01	001		A		001-SUB
D	GENERATOR DRIVE - CSD LOAD CONTROL	11-24-15-01	001		D		001-SUB
A	AC GENERATION AND CONTROL	11-24-21-01	001		A		001-SUB
G	AC INDICATION	11-24-22-03	003		G		001-SUB
D	AC PROTECTION	11-24-23-01	001		D		001-SUB
A	INVERTER EMERGENCY AC POWER	11-24-24-01	001		A		001-SUB
A	AIR DRIVEN EMERGENCY AC POWER	11-24-25-01	001		A		001-SUB
A	DC POWER	11-24-31-01	001		A		001-SUB
A	DC CONTROL	11-24-32-01	001		A		001-SUB
A	DC INDICATION	11-24-33-01	001		A		001-SUB
A	EMERGENCY DC POWER	11-24-34-01	001		A		001-SUB
A	MAIN EXTERNAL POWER AND CONTROL	11-24-41-01	001		A		001-SUB
A	GALLEY EXTERNAL POWER AND CONTROL	11-24-42-01	001		A		001-SUB
T	AC POWER DISTRIBUTION AND CONTROL	11-24-51-01	001		A		001-068, 070-070
T		11-24-51-01	002		R		069-069, 071-SUB

TITLE:	DRAWING NUMBER	REV	DATE	MODEL	FSCM NO	PAGE
INDEX OF PRODUCTION DIAGRAMS ELECTRICAL POWER SYSTEM	555-00010	T	1 JUL 1977	XC-555A	00000	4-11-24-01

FIGURE 7. INDEX OF PRODUCTION DIAGRAMS

THIS SAMPLE DRAWING IS INFORMATIONAL ONLY AND COMPLETE TO THE DEGREE NECESSARY TO ILLUSTRATE A TYPE OF DRAWING. ACTUAL FORMAT AND DRAWING SHALL CONFORM TO THE TEXTUAL REQUIREMENTS SET FORTH IN THIS STANDARD.

REV	DIAGRAM TITLE	DIAGRAM NUMBER	ADDS CONF	ADDS PGS	ADDS REV	REPLACES CONF	REPLACES PGS	REPLACES REV	MODIFICATION DIRECTIVE	EFFECTIVITY
B	GENERATOR DRIVE - CSD AND DISCONNECT	11-24-11-01	001		A					001-068
B		11-24-11-01	002		B					069-178
BA		11-24-11-01	003		BA	001		A	1C-555-145	001-068
BA		11-24-11-01	004		BA	002		B	1C-555-145	069-178
T	GENERATOR DRIVE - CSD OIL COOLING	11-24-12-01	001		T					001-178
D	GENERATOR DRIVE - CSD OIL TEMP INDICATION	11-24-13-01	001		D					001-178
A	GENERATOR DRIVE - CSD OIL PRESSURE IND	11-24-14-01	001		A					001-178
D	GENERATOR DRIVE - CSD LOAD CONTROL	11-24-15-01	001		D					001-178
AU	AC GENERATION AND CONTROL	11-24-21-01	002		AU					001-178
BA		11-24-21-02	001		BA				1C-555-145	001-068
BA		11-24-21-02	002		BA				1C-555-145	069-178
AU	AC INDICATION	11-24-22-01	002		AU					001-178
BA		11-24-22-02	001		BA				1C-555-145	001-068
BA		11-24-22-02	002		BA				1C-555-145	069-178
AU	AC PROTECTION	11-24-23-01	002		AU					001-178
BA		11-24-23-01	003		BA	002			1C-555-145	001-178
AU		11-24-23-02	001		AU					001-068
AU		11-24-23-02	002		AU					069-178
BA		11-24-23-02	003		BA	001		AU	1C-555-145	001-068
BA		11-24-23-02	004		BA	002		AU	1C-555-145	069-178
A	INVERTER EMERGENCY AC POWER	11-24-24-01	001		A					001-178
A	AIR DRIVEN EMERGENCY AC POWER	11-24-25-01	001		A					001-178
A	DC POWER	11-24-31-01	001		A					001-178
A	DC CONTROL	11-24-32-01	001		A					001-178
A	DC INDICATION	11-24-33-01	001		A					001-178
A	EMERGENCY DC POWER	11-24-34-01	001		A					001-178
A	MAIN EXTERNAL POWER AND CONTROL	11-24-41-01	001		A					001-178
A	GALLEY EXTERNAL POWER AND CONTROL	11-24-42-01	001		A					001-178
AU	AC POWER DISTRIBUTION AND CONTROL	11-24-51-01	002		AU					001-068, 070-070
AU		11-24-51-01	003		AU					069-069, 071-178
BA		11-24-51-01	004		BA	002		AU	1C-555-145	001-068, 070-070
BA		11-24-51-01	004		BA	003		AU	1C-555-145	069-069, 071-178
BC		11-24-51-01	005		BC	004		BA	1C-555-200	001-178
AY		11-24-51-02	001		AY				1C-555-145	001-178
BB		11-24-51-02	002		BB	001		AY	1C-555-132	001-178
BE		11-24-51-02	003		BE	002		BB	1C-555-200	001-178
D	DC POWER DISTRIBUTION AND CONTROL	11-24-52-01	001		D					001-178
A	GROUND SERVICE DISTRIBUTION AND CONTROL	11-24-53-01	001		A					001-178
A	COMMUNICATIONS CENTER POWER CONTROL	11-24-54-01	001		A					001-178

TITLE:	DRAWING NUMBER	REV	DATE	MODEL	FSCM NO	PAGE
INDEX OF EFFECTIVE DIAGRAMS ELECTRICAL POWER SYSTEMS	555-00010	BE	10 OCT 1981	XC-555A	00000	5-11-24-01

FIGURE 8. INDEX OF EFFECTIVE DIAGRAMS

THIS SAMPLE DRAWING IS INFORMATIONAL ONLY AND COMPLETE TO THE DEGREE NECESSARY TO ILLUSTRATE A TYPE OF DRAWING. ACTUAL FORMAT AND DRAWING SHALL CONFORM TO THE TEXTUAL REQUIREMENTS SET FORTH IN THIS STANDARD.

REV	MOD NUMBER	MODIFICATION TITLE	USED ON DRAWING	DRAWING FSCM NO	MODIFICATION DIRECTIVE	CHANGE NUMBER	CLASS IV/V MOD NO.
T	001	ENGINE INSTRUMENTATION	555-33311	00000	1C-555-40	ECP 18	
W	002	ALCC SYSTEM INSTALLATION	555-39842	00000	1C-555-32	ECP 25	0000
AA	003	ALCC STAFF CONSOLE POSITION 1 AND 2	555-39842	00000	1C-555-32A	ECP 44	0000
AB	004	TELETYPE SYSTEM - HIGH SPEED	555-34281	00000	1C-555-18	ECP 38	
AC	005	SECURE DIGITAL COMMUNICATIONS INSTALLATION	555-44602	00000	1C-555-12	ECP 92	0000
AD	006	PROJECT PHASER	555-41263	00000	1C-555-92	ECP 50	0000
AE	007	PROJECT ZERO GEE NO. 1	555-51370	00000	1C-555-77	ECP 84	
AF	008	OVEN INSTALLATION, TYPE I, R-4	555-54112	00000	1C-555-100	ECP 59	
AG	009	UPPER DECK AIR CONDITIONING REWORK	555-54982	00000	1C-555-96	ECP 112	
AH	010	RADIO RELAY, CONUS	555-55256	00000	1C-555-123	ECP 145	0000
AJ	011	EMERGENCY LIGHTING INSTALLATION	555-65902	00000	1C-555-140	ECP 170	
AK	012	ADVANCED INERTIAL NAVIGATION, AN/XXX-000 INSTALLATION	555-67311	00000	1C-555-168	ECP 171	
AL	013	IMPROVED CONTROL SURFACES INTERFACE	555-66433	00000	1C-555-180	ECP 192	
AM	014	THETA BASE OIL QUANTITY INDICATION INSTALLATION	555-45912	00000	1C-555-192	ECP 187	
AN	015	FOURTH ALTERNATOR INSTALLATION	555-55821	00000	1C-555-145	ECP 212	
AP	016	RATIONAL CADC INSTALLATION	555-57403	00000	1C-555-132	ECP 218	
AR	017	HAL COMPUTER INSTALLATION	555-52001	00000	1C-555-200	ECP 200	
AT	018	HOT CARGO HEATING INSTALLATION	555-67890	00000	1C-555-249	ECP 269	
AU	019	HAL CHECKOUT CONSOLE INSTALLATION, MALFUNCTION ANALYSIS	555-72001	00000	1C-555-250	ECP 265	

TITLE : INDEX OF MODIFICATIONS	DRAWING NUMBER	REV	DATE	MODEL	FSCM	PAGE
	555-00010	AU	9 AUG 1980	XC-555A	00000	6-0001-00

FIGURE 9. INDEX OF MODIFICATIONS

THIS SAMPLE DRAWING IS INFORMATIONAL ONLY AND COMPLETE TO THE DEGREE NECESSARY TO ILLUSTRATE A TYPE OF DRAWING. ACTUAL FORMAT AND DRAWING SHALL CONFORM TO THE TEXTUAL REQUIREMENTS SET FORTH IN THIS STANDARD.

REV	PAGE	ADDS CONF.	ADDS REV.	REPLACES CONF.	REPLACES REV	CHANGE DIRECTIVE	EFFECTIVITY
	DATA INDEX						
BA	7-0015-01		BB				001-178
	WIRE HARNESS LIST						
BA	9-2019-01		BA		AM		001-178
BA	9-2060-01		BA		..		001-178
BA	9-3020-01		BA		AW		001-178
BA	9-3116-01		BA		..		001-178
BA	9-7012-04		BA		F		001-178
BA	9-7090-02		BA		..		001-178
BA	9-7090-03		BA		..		
	CONNECTION LIST						
BA	8-24-21-01		BA		AN		001-178
BA	8-24-22-03		BA		AN		001-178
BA	8-24-23-05		BA		G		001-178
BA	8-24-23-06		BA		G		001-178
BA	8-24-24-04		BA		G		001-178
BA	8-24-24-05		BA		R		001-178
BA	8-24-51-06		BA		AW		001-178
BA	8-24-51-08		BA		AN		
	EQUIPMENT LIST						
BB	10-24-00-01		BB		AU		001-178
BA	10-24-00-02		BA		AB		001-178
	INTERCONNECTION DIAGRAMS						
BA	11-24-21-01	003	BA	001	A		001-049
BA	11-24-21-01	004	BA	002	AM		050-178
BA	11-24-22-01	004	BA	001	A		001-049
BA				003	AM		050-059
BA	11-24-22-01	005	BA	002	AR		060-178
BA	11-24-23-01	002	BA	001	AU		001-178
BA	11-24-23-02	002	BA	001	AU		001-059
BA	11-24-24-01	002	BA	001	A		001-178
BA	11-24-24-04	001	BA				001-178
BA	11-24-25-01	002	BA	001	A		001-178

TCTO NUMBER	NEXT ASSEMBLY		CONTRACT NUMBER
1C-555-145	555-55821	RESERVED FOR AF USE	AF81601-1111

TITLE	DRAWING NUMBER	REV	DATE	MODEL	FSCM NO	PAGE
MODIFICATION DATA INDEX FOURTH ALTERNATOR INSTALLATION	555-00010	BA	27 JUNE 81	XC-555A	00000	7-0015-00

FIGURE 10. MODIFICATION DATA INDEX

THIS SAMPLE DRAWING IS INFORMATIONAL ONLY AND COMPLETE TO THE DEGREE NECESSARY TO ILLUSTRATE A TYPE OF DRAWING. ACTUAL FORMAT AND DRAWING SHALL CONFORM TO THE TEXTUAL REQUIREMENTS SET FORTH IN THIS STANDARD.

REV	TERMINATION	TERM	WIRE NUMBER	SUB-SUB-SYSTEM	MODIFICATION DIRECTIVE	EFFECTIVITY
A	3443P22	1	W105 -600-22BK	34-43-01		001-SUB
A	3443P22	2	W105 -600-22BL	34-43-01		001-SUB
A	3443P22	3	W105 -600-22BR	34-43-01		001-SUB
A	3443P22	4	W105 -600-22GN	34-43-01		001-SUB
F	3443P22	5	W105 -600-22RD	34-43-01		001-049
F	3443P22	5	W105 -600-22WH	34-43-01		050-SUB
F	3443P22	6	W105 -600-22WH	34-43-01		001-049
F	3443P22	6	W105 -600-22RD	34-43-01		050-SUB
A	3443P22	7	W105 -600-22YE	34-43-01		001-SUB
A	3443P22	8	W105 -703-22JP	34-43-01		001-SUB
A	3443P22	9	W105 -018-22	34-43-01		001-SUB
A	3443P22	10	SPARE			001-SUB
A	3443P22	11	SPARE			001-SUB
A	3443P22	12	SPARE			001-SUB
A	3443P23	1	W105 -001-22	34-43-01		001-SUB
A	3443P23	2	W105 -002-22	34-43-01		001-SUB
A	3443P23	3	W105 -003-22	34-43-01		001-SUB
A	3443P23	4	W105 -004-22	34-43-01		001-SUB
A	3443P23	5	W105 -005-22	34-43-01		001-SUB
A	3443P23	6	W105 -006-22	34-43-01		001-SUB
A	3443P23	7	W105 -007-22	34-43-01		001-SUB
A	3443P23	8	W105 -008-22	34-43-01		001-SUB
A	3443P23	9	W105 -009-22	34-43-01		001-SUB
A	3443P23	10	W105 -010-22	34-43-01		001-SUB
A	3443P23	11	W105 -302-22BL	34-43-01		001-SUB
A	3443P23	12	W105 -302-22RD	34-43-01		001-SUB
A	3443P23	13	W105 -302-22YE	34-43-01		001-SUB
A	3443P23	14	W105 -700-22JP	34-43-01		001-SUB
A	3443P23	15	W105 -303-22BL	34-43-01		001-SUB
A	3443P23	16	W105 -303-22RD	34-43-01		001-SUB
A	3443P23	17	W105 -303-22YE	34-43-01		001-SUB
A	3443P23	18	W105 -011-22	34-43-01		001-SUB
A	3443P23	19	W105 -012-22	34-43-01		001-SUB
A	3443P23	20	W105 -013-22	34-43-01		001-SUB
A	3443P23	21	W105 -601-22BK	34-43-01		001-SUB
A	3443P23	22	W105 -601-22BL	34-43-01		001-SUB
A	3443P23	23	W105 -601-22BR	34-43-01		001-SUB
A	3443P23	24	W105 -601-22GN	34-43-01		001-SUB
F	3443P23	25	W105 -601-22RD	34-43-01		001-049
F	3443P23	25	W105 -601-22WH	34-43-01		050-SUB
F	3443P23	26	W105 -601-22WH	34-43-01		001-049
F	3443P23	26	W105 -601-22RD	34-43-01		050-SUB
A	3443P23	27	W105 -601-22RD	34-43-01		001-SUB
A	3443P23	28	W105 -701-22JP	34-43-01		001-SUB
A	3443P23	29	W105 -014-22	34-43-01		001-SUB
A	3443P23	30	W105 -015-20	34-43-01		001-SUB
A	3443P23	31	W105 -016-22	34-43-01		001-SUB
A	3443P23	32	W105 -017-22	34-43-01		001-SUB
A	3443P24	1	W105 -001-22	34-43-01		001-SUB
A	3443P24	2	W105 -002-22	34-43-01		001-SUB
A	3443P24	3	W105 -003-22	34-43-01		001-SUB
A	3443P24	4	W105 -004-22	34-43-01		001-SUB
A	3443P24	5	W105 -005-22	34-43-01		001-SUB
A	3443P24	6	W105 -006-22	34-43-01		001-SUB
A	3443P24	7	W105 -007-22	34-43-01		001-SUB
A	3443P24	8	W105 -008-22	34-43-01		001-SUB
A	3443P24	9	W105 -009-22	34-43-01		001-SUB
A	3443P24	10	W105 -010-22	34-43-01		001-SUB
A	3443P24	11	W105 -300-22BL	34-43-01		001-SUB
A	3443P24	12	W105 -300-22RD	34-43-01		001-SUB
A	3443P23	13	W105 -300-22YE	34-43-01		001-SUB
A	3443P23	14	W105 -301-22BL	34-43-01		001-SUB
A	3443P23	15	W105 -301-22RD	34-43-01		001-SUB
A	3443P23	16	W105 -301-22YE	34-43-01		001-SUB
A	3443P23	17	W105 -033-22	SPARE		001-SUB
A	3443P23	18	W105 -033-22	SPARE		001-SUB
(2)	(10)	(4)	(6) (12) (18)	(8)	(13)	(11)

NOTE: NUMBERS ENCLOSED ( ) INDICATE ELEMENT SIZE NOT INCLUDING SPACING

TITLE	DRAWING NUMBER	REV	DATE	MODEL	CSCM NO.	PAGE
CONNECTION LIST INERTIAL NAVIGATION SET NO. 3	555-00010	F	30 SEPT 75	XC-555A	00000	8 - 34 - 43 - 01

FIGURE 11. CONNECTION LIST

THIS SAMPLE DRAWING IS INFORMATIONAL ONLY AND COMPLETE TO THE DEGREE NECESSARY TO ILLUSTRATE A TYPE OF DRAWING. ACTUAL FORMAT AND DRAWING SHALL CONFORM TO THE TEXTUAL REQUIREMENTS SET FORTH IN THIS STANDARD.

REV	WIRE NUMBER	WIRE TYPE CODE	WIRE LENGTH (mm)	SUB-SYSTEM	TERMINATION END 1	TERM. CODE	CONNECTION POINT	TERMINATION END 2	TERM. CODE	CONNECTION POINT	MODIFICATION DIRECTIVE	EFFECTIVITY	EMC	SIGNAL CODE
AY	W125 -001-22	AA	120.0	23-14-01	2314P124	106	1	2314P125A	106	1		001-SUB	2	2314AAA
AY	W125 -002-22	AA	120.0	23-14-01	2314P124	106	2	2314P125A	106	2		001-SUB	2	2314AAB
AY	W125 -003-22	AA	120.0	23-14-01	2314P124	106	3	2314P125A	106	3		001-SUB	2	2314AAC
AY	W125 -004-22	AA	120.0	23-14-01	2314P124	106	4	2314P125A	106	4		001-SUB	2	2314AAD
AY	W125 -005-22	AA	120.0	23-14-01	2314P124	106	5	2314P125A	106	5		001-SUB	2	2314AAE
AY	W125 -006-22	AA	120.0	23-14-01	2314P124	106	6	2314P125A	106	6		001-SUB	2	2314AAF
AY	W125 -007-22	AA	120.0	23-14-01	2314P124	106	7	2314P125A	106	7		001-SUB	2	2314AAG
AY	W125 -008-22	AA	120.0	23-14-01	2314P124	106	8	2314P125A	106	8		001-SUB	2	2314AAH
AY	W125 -009-22	AA	120.0	23-14-01	2314P124	106	9	2314P125A	106	9		001-SUB	2	2314AAI
AY	W125 -010-22	AA	120.0	23-14-01	2314P124	106	10	2314P125A	106	10		001-SUB	2	2314AAJ
AY	W125 -011-22	AA	084.0	23-14-01	2314P124	106	18	3931TB1	2013	1		001-SUB	2	2314AAX
AY	W125 -012-22	AA	084.0	23-14-01	2314P124	106	19	3931TB1	2013	2		001-SUB	2	2314AAY
AY	W125 -013-22	AA	084.0	23-14-01	2314P124	106	20	3931TB1	2013	3		001-SUB	2	2314ACD
AY	W125 -014-22	YY	.	23-14-01	2314S1	.	A	3922SA1	2050	SP1		001-SUB	2	2314ABA
AY	W125 -015-22	YY	.	23-14-01	2314S1	.	B	3922SA1	2050	SP2		001-SUB	2	2314ACA
AY	W125 -016-22	YY	.	23-14-01	2314S1	.	C	3922SA1	2050	SP3		001-SUB	2	2314ACB
AY	W125 -017-22	YY	.	23-14-01	2314S1	.	D	3922SA1	2050	SP4		001-SUB	2	2314ACC
AY	W125 -018-22	YY	.	23-14-01	2314DS1	.	A	3922SA1	2050	SP5		001-SUB	2	2314AAX
AY	W125 -019-22	YY	.	23-14-01	2314DS1	.	B	3922SA1	2050	SP2		001-SUB	2	2314ACA
AY	W125 -020-22	YY	.	23-14-01	2314DS2	.	A	3922SA1	2050	SP6		001-SUB	2	2314AAY
AY	W125 -021-22	YY	.	23-14-01	2314DS2	.	B	3922SA1	2050	SP4		001-SUB	2	2314ACC
AY	W125 -022-22	YY	.	23-14-01	2314DS3	.	A	3922SA1	2050	SP7		001-SUB	2	2314AAZ
AY	W125 -023-22	YY	.	23-14-01	2314DS3	.	B	3922SA1	2050	SP4		001-SUB	2	2314ACC
AY	W125 -024-22	AA	043.0	23-14-01	3912TB1	2013	1	3922SA1	2050	SP5		001-SUB	2	2314AAX
AY	W125 -025-22	AA	043.0	23-14-01	3912TB1	2013	2	3922SA1	2050	SP6		001-SUB	2	2314AAY
AY	W125 -026-22	AA	043.0	23-14-01	3912TB1	2013	3	3922SA1	2050	SP7		001-SUB	2	2314AAZ
AY	W125 -027-22	AA	140.0	23-14-01	3922SA1	2050	SP7	2314K9	2013	X1		001-SUB	2	2314AAZ
AY	W125 -300-22RD	CAA	120.0	23-14-01	2314P124	106	11	2314P125A	106	11		001-SUB	2	2314AAK
AY	W125 -300-22BL	CAA	120.0	23-14-01	2314P124	106	12	2314P125A	106	12		001-SUB	2	2314AAL
AY	W125 -300-22YE	CAA	120.0	23-14-01	2314P124	106	13	2314P125A	106	13		001-SUB	2	2314AAM
AY	W125 -300-99SH	CAA	120.0	23-14-01	2314FR1	1122	FR1	2314P125A	.			001-SUB	2	2314AAN
AY	W125 -301-22RD	CAJ	120.0	23-14-01	2314P124	106	14	2314P125A	106	14		001-SUB	2	2314AAO
AY	W125 -301-22BL	CAJ	120.0	23-14-01	2314P124	106	15	2314P125A	106	15		001-SUB	2	2314AAP
AY	W125 -301-22YE	CAJ	120.0	23-14-01	2314P124	106	16	2314P125A	106	16		001-SUB	2	2314AAQ
AY	W125 -600-22RD	HAA	190.0	23-14-01	2314P124	106	21	2314P123	106	1		001-SUB	2	2314AAR
AY	W125 -600-22BL	HAA	190.0	23-14-01	2314P124	106	22	2314P123	106	2		001-SUB	2	2314AAS
AY	W125 -600-22YE	HAA	190.0	23-14-01	2314P124	106	23	2314P123	106	3		001-SUB	2	2314AAT
AY	W125 -600-22GN	HAA	190.0	23-14-01	2314P124	106	24	2314P123	106	4		001-SUB	2	2314AAU
AY	W125 -600-22WH	HAA	190.0	23-14-01	2314P124	106	25	2314P123	106	5		001-049	2	2314AAV
AY	W125 -600-22WH	HAA	190.0	23-14-01	2314P124	106	25	2314P123	106	6		050-SUB	2	2314AAV
AY	W125 -600-22BK	HAA	190.0	23-14-01	2314P124	106	26	2314P123	106	6		001-049	2	2314AAW
AY	W125 -600-22BK	HAA	190.0	23-14-01	2314P124	106	26	2314P123	106	5		050-SUB	2	2314AAW
AY	W125 -600-99SH	HAA	190.0	23-14-01	2314FR2	1124	FR2	2314P123	106	7		050-SUB	2	2314ADE
AY	W125 -700-22JP	AA	006.0	23-14-01	2314P124	106	36	2314FR2	1124	FR2		001-SUB	2	2314ADE
AY	W125 -701-22JP	AA	006.0	23-14-01	2314P124	106	37	2314FR1	1124	FR1		001-SUB	2	2314AAN
AY	W125 -900-22	AA	045.0	23-14-01	2314P124	106	38	2314K9	2013	X1		001-SUB	2	2314ACD
(2)	(18)	(3)	(6)	(8)	(10)	(4)	(9)	(10)	(4)	(9)	(13)	(11)	(1)	(7)

NOTE: NUMBERS ENCLOSED ( ) INDICATE ELEMENT SIZE.

MFG CODE 00000, ASSY DWG NO. 555-99990, EFFECTIVITY 001-049
ASSY DWG NO. 555-99999, EFFECTIVITY 050-SUB

TITLE	DRAWING NUMBER	REV	DATE	MODEL	FSCM NO.	PAGE
WIRE HARNESS HF RADIO NO. 4 CONTROL	555-00010	AY	22 MAR 81	XC-555A	00000	9-0125-01

FIGURE 12. WIRE HARNESS LIST

THIS SAMPLE DRAWING IS INFORMATIONAL ONLY AND COMPLETE TO THE DEGREE NECESSARY TO ILLUSTRATE A TYPE OF DRAWING. ACTUAL FORMAT AND DRAWING SHALL CONFORM TO THE TEXTUAL REQUIREMENTS SET FORTH IN THIS STANDARD.

REV	EQUIPMENT NUMBER DESIGNATOR	SAU	PART NUMBER/ SPEC CONT NO. FSCM NO.	PART DESCRIPTION	USED ON DRAWING	CHANGE AUTHORIZATION	STA/WL/BL ENCLOSURE	EFFECTIVITY	NOTES
A	2311C1	.01	CSR13J333	CAPACITOR, .033UFD	555-32311		3922A1	001-SUB	
A	2311E1	.01	AT-0000	ANTENNA, HF NO. 1	555-34980		1450 600 R1	001-SUB	
A	2311J1	.01	M39012/19-0015	JACK, PRESS BHD	555-35776		345 208 L53	001-SUB	
A	2311J2	.01	M39012/17-0015	JACK	555-35777		345 208 L53	001-SUB	
A	2311J3	.01	M39012/17-0015	JACK	555-35778		1340 309 R6	001-SUB	
A	2311K1	.01	RY4LA3B3L01	RELAY, PTT	555-40134		243 220 R53	001-SUB	
F	2311K2	D01	RY4LA3B3L01	RELAY, MUTING	555-40134	ECP 76	246 220 R53	001-SUB	
F		.02	RY4LA3C3L01		555-69738	ECP 76		001-SUB	
F	2311K3	.01	RY4LA3B3L01	RELAY, INTERLOCKING	555-40134	ECP 76	249 220 R53	001-049	
F		.02	RY4LA3C3L01		555-40134	ECP 76		050-SUB	
A	2311P1	.01	MS27473F20B35S	PLUG, RECEIVER NO. 1 -1J1	555-35401		315 208 R40	001-SUB	
A	2311P2	.01	MS27473F20B35SD	PLUG, RECEIVER NO. 1 -1J2	555-35401		3922A1	001-SUB	
A	2311P3	.01	MS27473F20B35SD	PLUG, RECEIVER NO. 1 -1J3	555-35402		3922A1	001-SUB	
A	2311P4	.01	MS27473F20B35S	PLUG, HF CONT NO. 1 -3J1	555-35402		3922A1	001-SUB	
A	2311P5	.01	MS3106E16S-1S	PLUG, HF XMTR NO. 1	555-35405		3922A1	001-SUB	
F		P01	MS3459L16S-1S		555-35405	ECP 76		001-SUB	
F	2311P5A	P01	MS3417-16F	BACKSHELL, PLUG	555-35405	ECP 76	3922A1	001-SUB	
A	2311P9	.01	UG-261B	PLUG	555-35508		820 300 R18	001-SUB	
F		P01	M39012/17-0015	PLUG	555-35508	ECP 76			
A	2311C01	.01	CU9876/ARC-0000	COUPLER, ANTENNA	555-28980		1340 309 R6	001-SUB	
A	2311CP1	.01	UG-414A	ADAPTER, PLUG	555-28980		1340 309 R18	001-SUB	
A	2311CT1	.01	C9999/ARC-0000	CONTROL, HF NO. 1	555-30129		3912PL5	001-SUB	
A	2311CT2	.01	1914F-4 (00000)	CONTROL, FILTER	555-32319		340 208 R20	001-SUB	
A	2311RE1	.01	R9999/ARC-0000	RECEIVER, HF NO. 1	555-32319		3922A1	001-SUB	
A	2311TR1	.01	T1605/ARC-0000	TRANSMITTER, HF NO. 1	555-32319		3922A1	001-SUB	
A	2311TB1	.01	MS27212-1-20	TERMINAL BOARD	555-32321		339 221 R53	001-SUB	
A	2311TB2	.01	M81714/5-1	TERMINAL BLOCK	555-23214		3922A1	001-SUB	
A	2311TB2A	.01	M81714/1-AB3	MODULE BLOCK	555-23214		3922A1	001-SUB	
A	2311TB2B	.01	M81714/1-AB3	MODULE BLOCK	555-23214		3922A1	001-SUB	
A	2311TB2C	.01	M81714/1-AB3	MODULE BLOCK	555-23214		3922A1	001-SUB	
(2)	(10)	(1) (2)	(20) (20) 2 LINES REQD.	(20) (20) 2 LINES REQD.	(15)	(13)	(11)	(11)	(5)

NOTE: NUMBERS ENCLOSED ( ) INDICATE ELEMENT SIZE.

COLUMN IDENTIFIED AS S A U INDICATES STATUS AND USE OF AN LRU.

STATUS PREFIX EXPLANATION: P-PREFERRED REPLACEMENT
D-DELETED
A-ADD

USE PREFIX EXPLANATION: 01-INITIAL ITEM USE AND APPLICATION
02-NEW ITEM USE OR CHANGE IN INITIAL ITEM APPLICATION
03-ADDITIONAL ITEM CHANGES OR APPLICATIONS SEQUENTIALLY NUMBERED

TITLE	DRAWING NUMBER	REV	DATE	MODEL	FSCM	PAGE
EQUIPMENT LIST COMMUNICATIONS SYSTEM	555-00010	F	30 SEPT 75	XC-555A	00000	10-23-00-02

FIGURE 13. EQUIPMENT LIST COMMUNICATIONS SYSTEM

THIS SAMPLE DRAWING IS INFORMATIONAL ONLY AND COMPLETE TO THE DEGREE NECESSARY TO ILLUSTRATE A TYPE OF DRAWING. ACTUAL FORMAT AND DRAWING SHALL CONFORM TO THE TEXTUAL REQUIREMENTS SET FORTH IN THIS STANDARD.

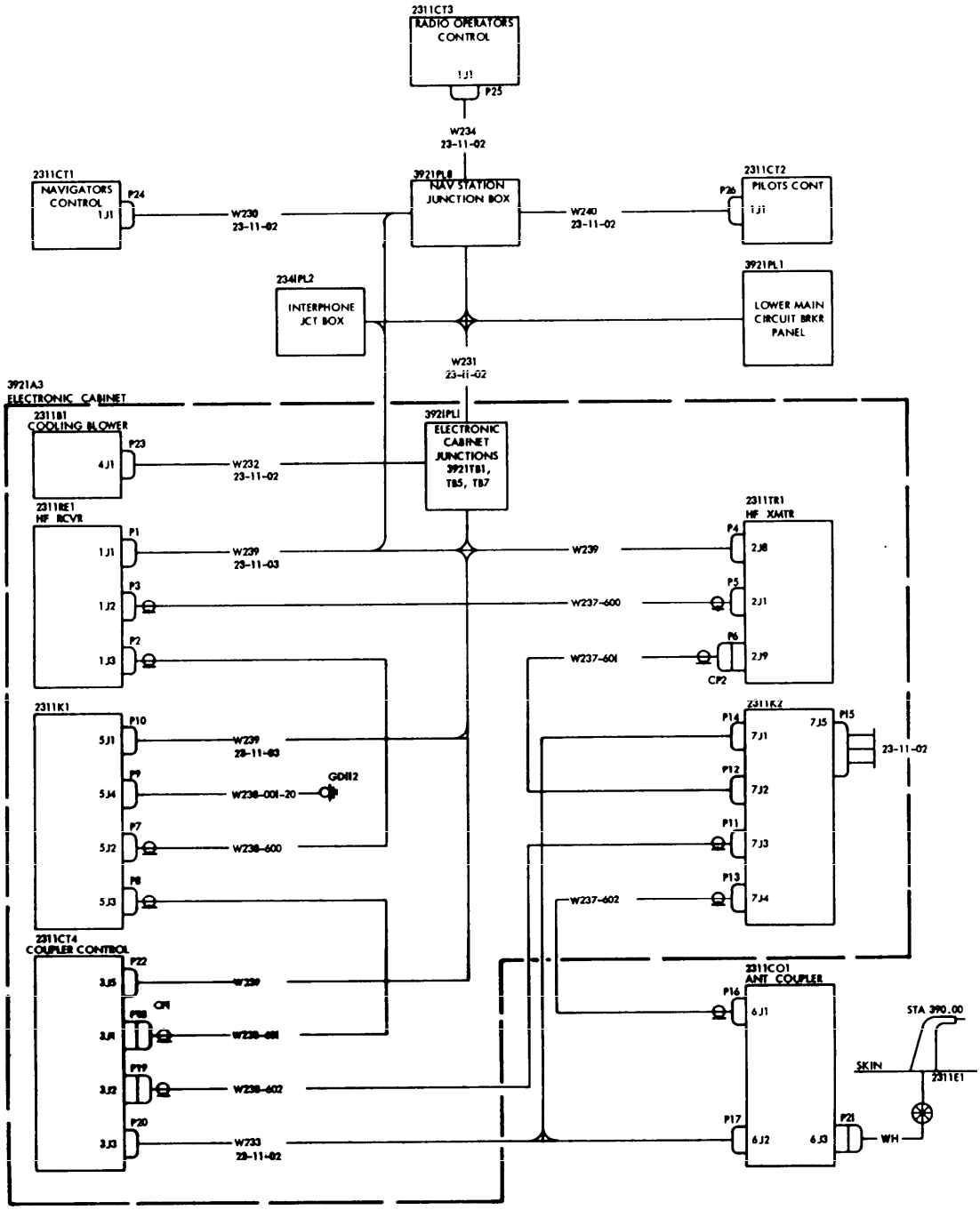

TITLE	MIL-STD	DRAWING NUMBER	REV	MODEL	FSCM NO.	PAGE
INTERCONNECT DIAGRAM– LIAISON RADIO NO.1 AN/ARC-000	AIRCRAFT COMPANY	555-00010	A	XC-555A	00000	11-23-11-01 CONFIG-001

FIGURE 14. BLOCK INTERCONNECTION DIAGRAM

THIS SAMPLE DRAWING IS INFORMATIONAL ONLY AND COMPLETE TO THE DEGREE NECESSARY TO ILLUSTRATE A TYPE OF DRAWING. ACTUAL FORMAT AND DRAWING SHALL CONFORM TO THE TEXTUAL REQUIREMENTS SET FORTH IN THIS STANDARD.

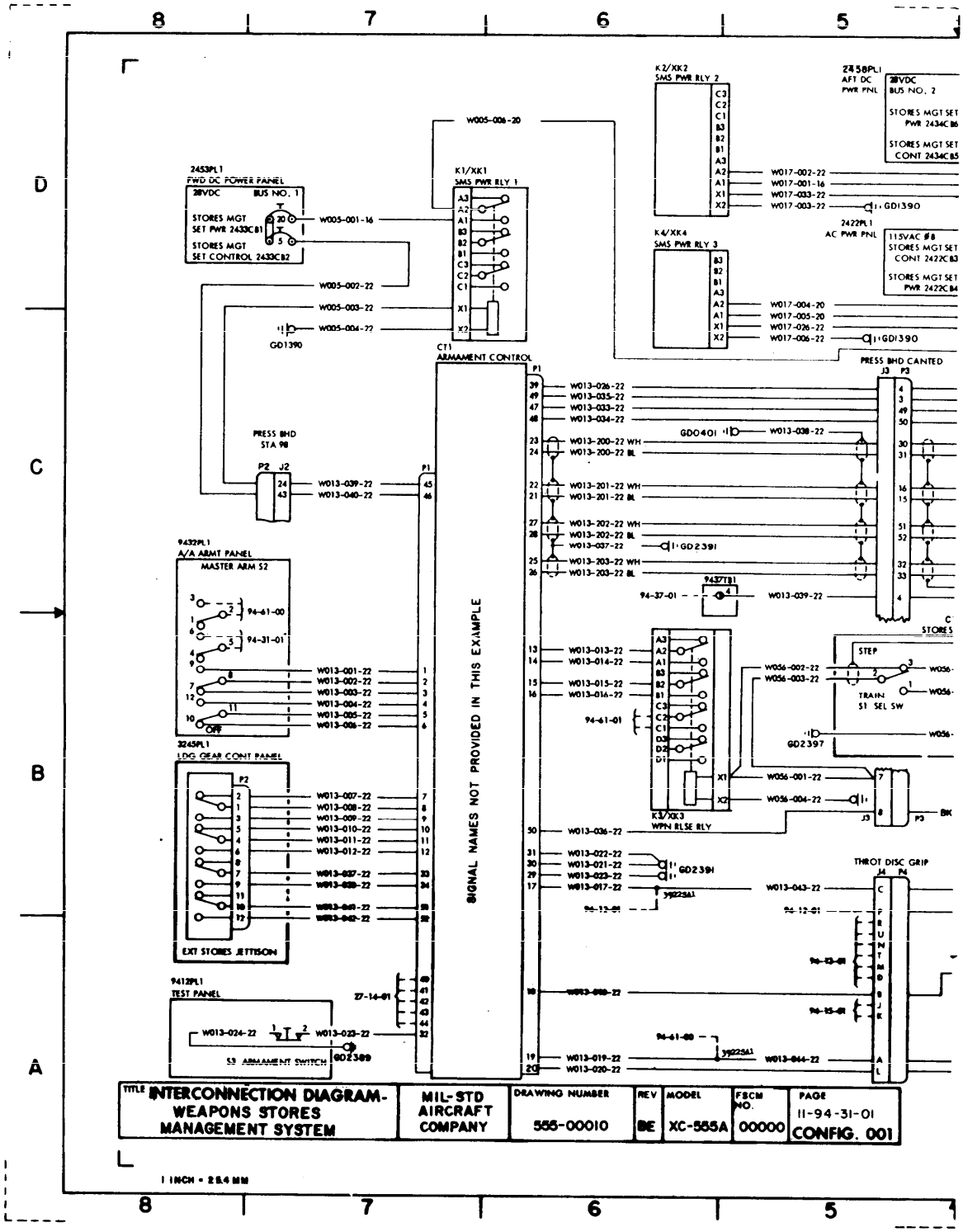

FIGURE 15. POINT TO POINT INTERCONNECTION DIAGRAM (SHEET 1 OF 2)

THIS SAMPLE DRAWING IS INFORMATIONAL ONLY AND COMPLETE TO THE DEGREE NECESSARY TO ILLUSTRATE A TYPE OF DRAWING. ACTUAL FORMAT AND DRAWING SHALL CONFORM TO THE TEXTUAL REQUIREMENTS SET FORTH IN THIS STANDARD.

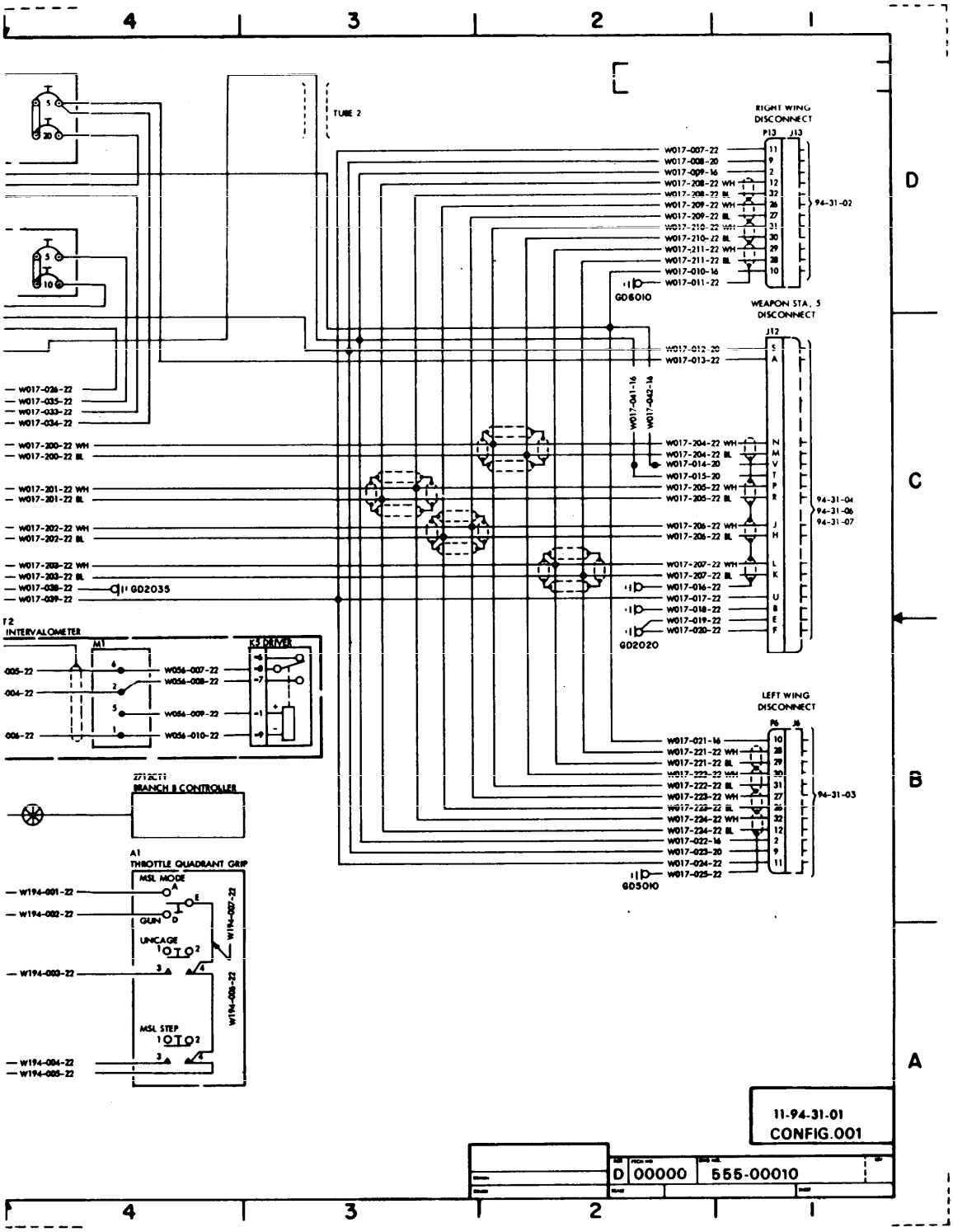

FIGURE 15. POINT TO POINT INTERCONNECTION DIAGRAM (SHEET 2 OF 2)

THIS SAMPLE DRAWING IS INFORMATIONAL ONLY AND COMPLETE TO THE DEGREE NECESSARY TO ILLUSTRATE A TYPE OF DRAWING. ACTUAL FORMAT AND DRAWING SHALL CONFORM TO THE TEXTUAL REQUIREMENTS SET FORTH IN THIS STANDARD.

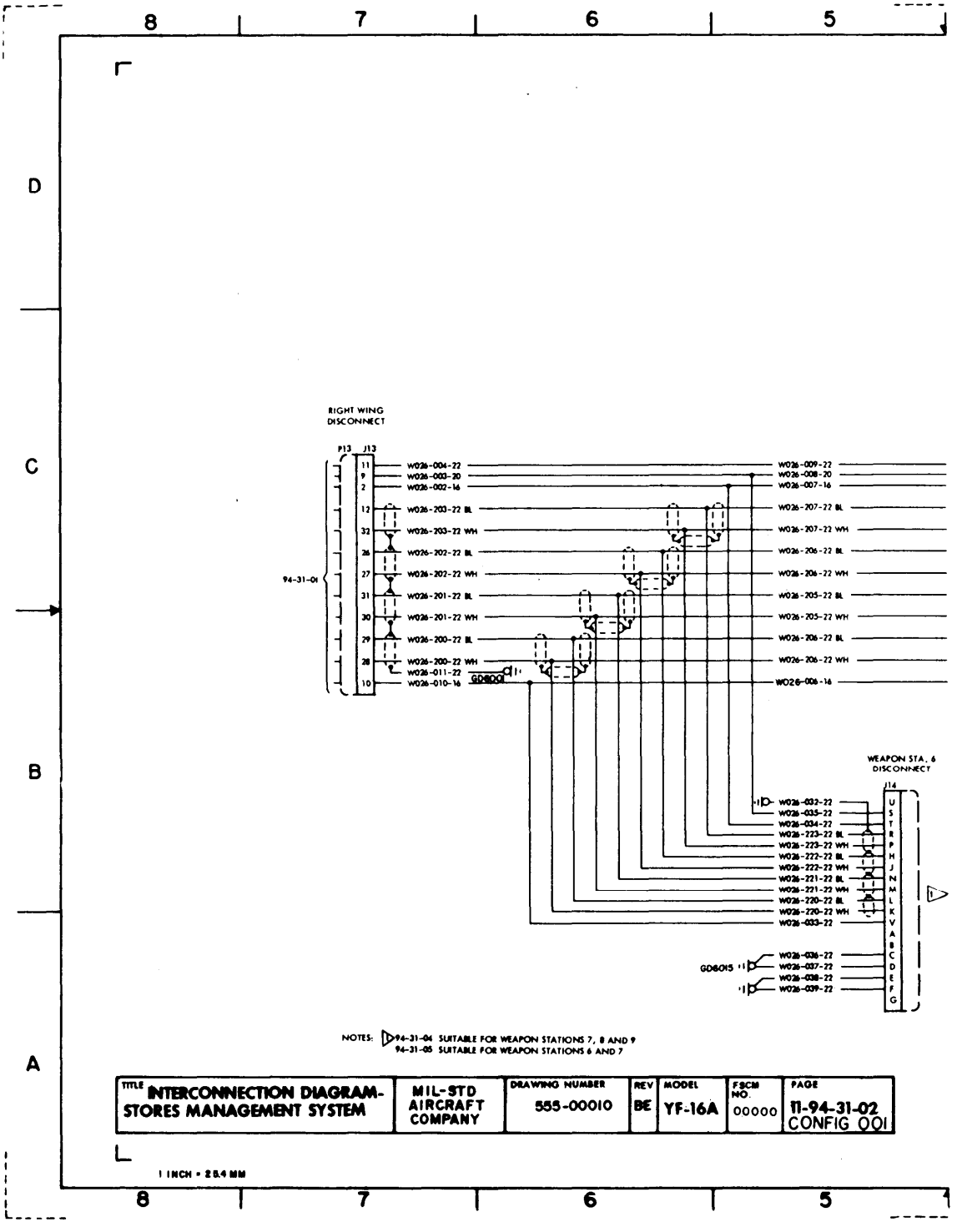

FIGURE 16. POINT TO POINT INTERCONNECTION DIAGRAM (SHEET 1 OF 2)

THIS SAMPLE DRAWING IS INFORMATIONAL ONLY AND COMPLETE TO THE DEGREE NECESSARY TO ILLUSTRATE A TYPE OF DRAWING. ACTUAL FORMAT AND DRAWING SHALL CONFORM TO THE TEXTUAL REQUIREMENTS SET FORTH IN THIS STANDARD.

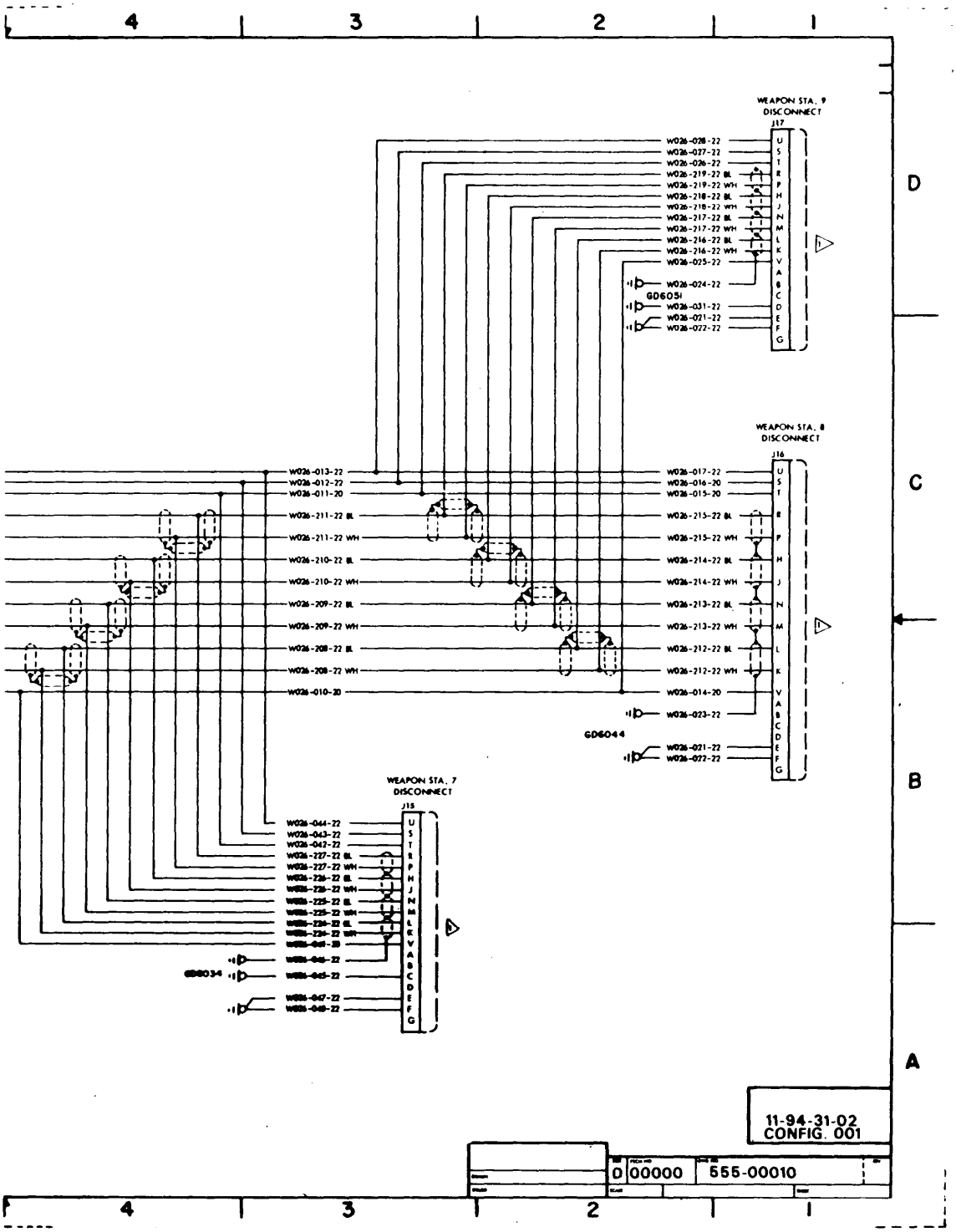

FIGURE 16. POINT TO POINT INTERCONNECTION DIAGRAM (SHEET 2 OF 2)

THIS SAMPLE DRAWING IS INFORMATIONAL ONLY AND COMPLETE TO THE DEGREE NECESSARY TO ILLUSTRATE A TYPE OF DRAWING. ACTUAL FORMAT AND DRAWING SHALL CONFORM TO THE TEXTUAL REQUIREMENTS SET FORTH IN THIS STANDARD.

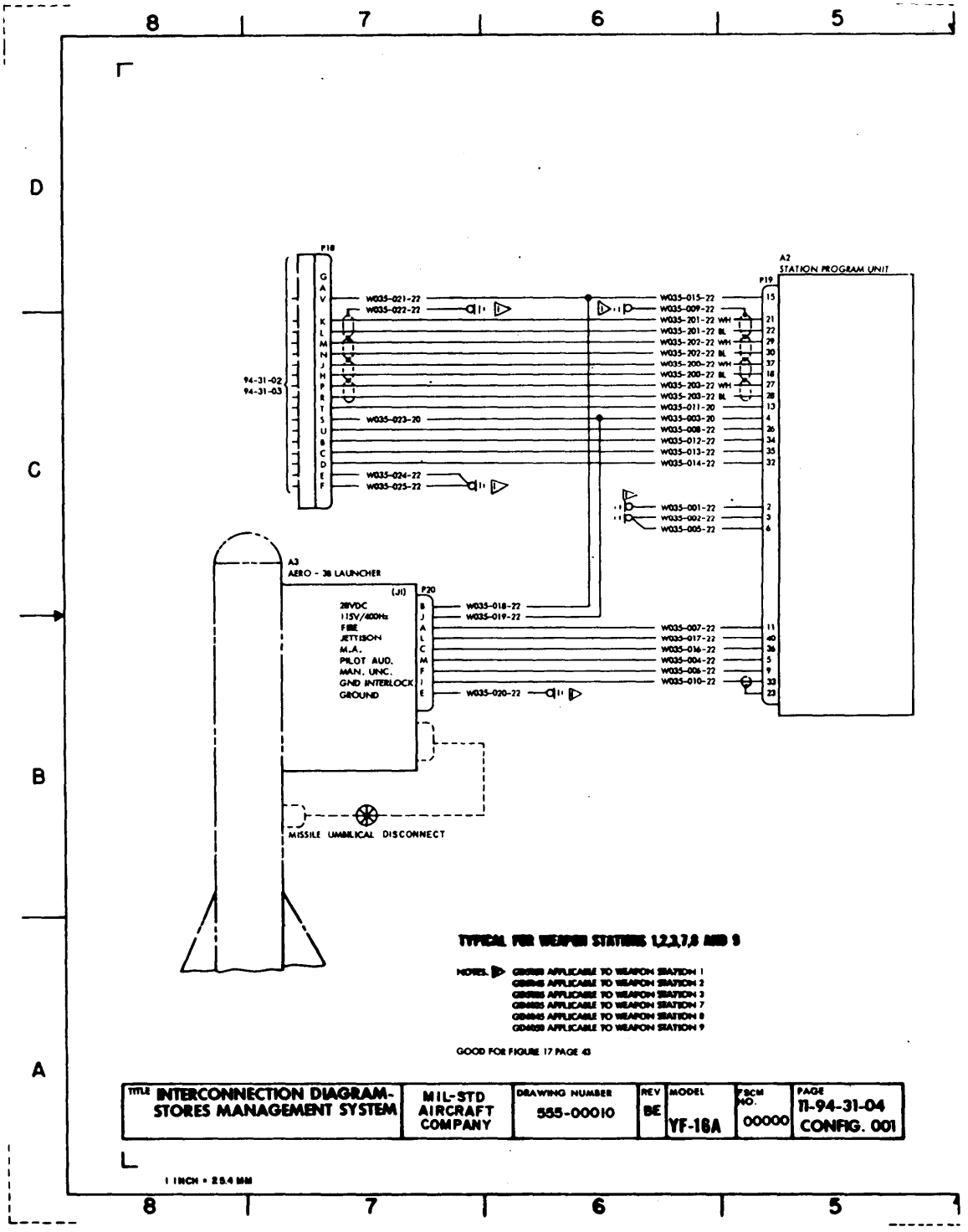

FIGURE 17. POINT TO POINT INTERCONNECTION DIAGRAM (SHEET 1 OF 2)

THIS SAMPLE DRAWING IS INFORMATIONAL ONLY AND COMPLETE TO THE DEGREE NECESSARY TO ILLUSTRATE A TYPE OF DRAWING. ACTUAL FORMAT AND DRAWING SHALL CONFORM TO THE TEXTUAL REQUIREMENTS SET FORTH IN THIS STANDARD.

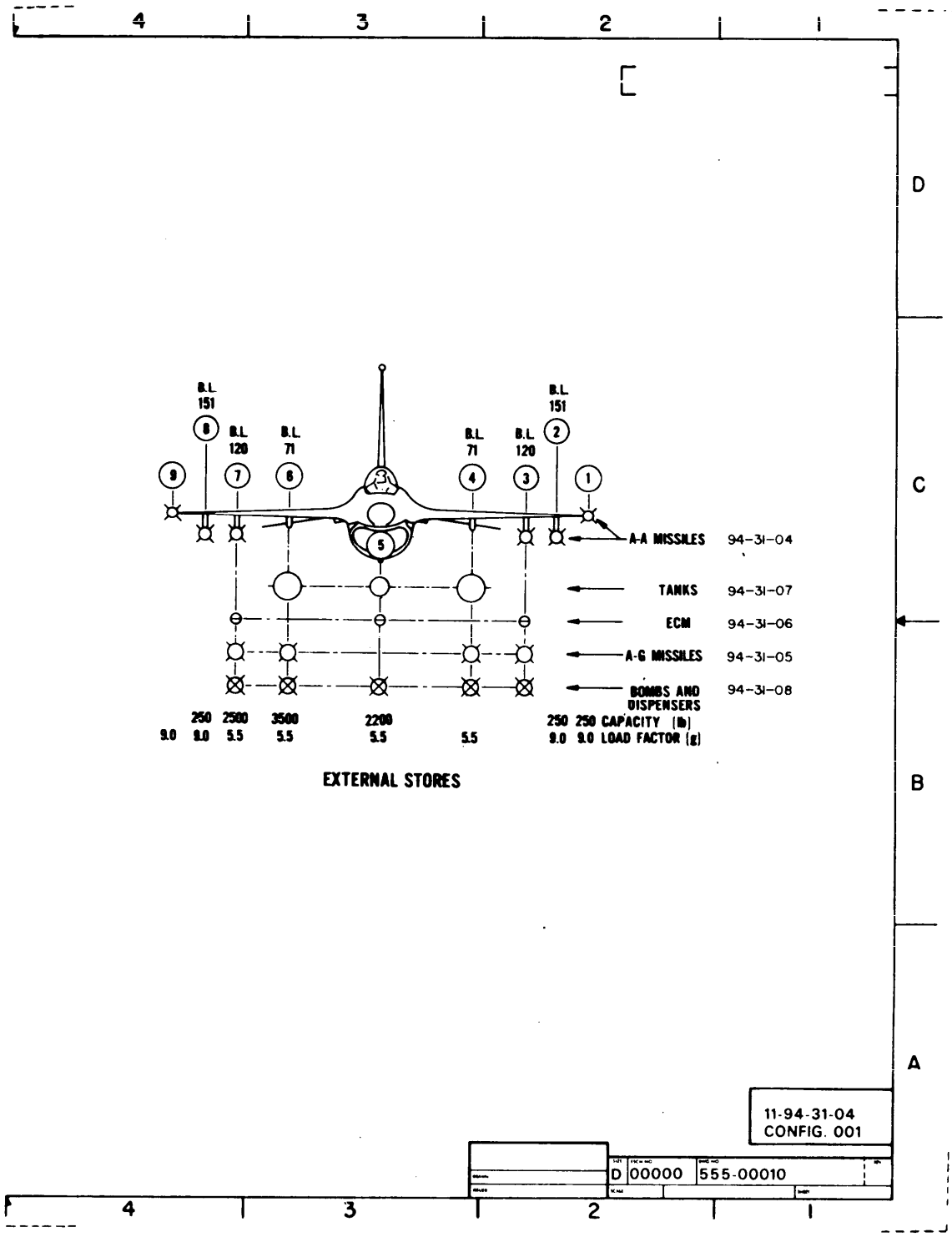

FIGURE 17. POINT TO POINT INTERCONNECTION DIAGRAM (SHEET 2 OF 2)

THIS SAMPLE DRAWING IS INFORMATIONAL ONLY AND COMPLETE TO THE DEGREE NECESSARY TO ILLUSTRATE A TYPE OF DRAWING. ACTUAL FORMAT AND DRAWING SHALL CONFORM TO THE TEXTUAL REQUIREMENTS SET FORTH IN THIS STANDARD.

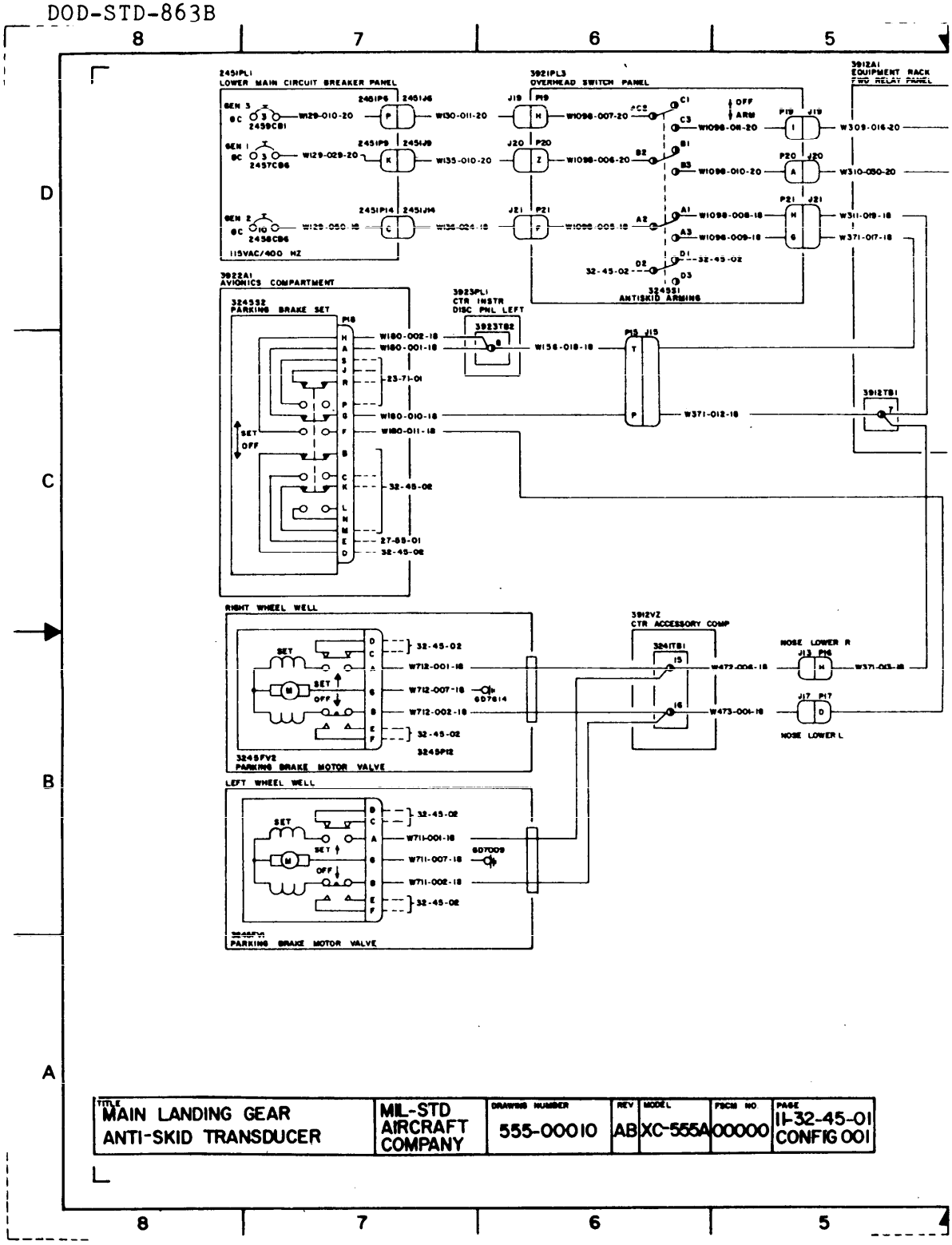

FIGURE 18. POINT TO POINT INTERCONNECT DIAGRAM (SHEET 1 OF 2)

THIS SAMPLE DRAWING IS INFORMATIONAL ONLY AND COMPLETE TO THE DEGREE NECESSARY TO ILLUSTRATE A TYPE OF DRAWING. ACTUAL FORMAT AND DRAWING SHALL CONFORM TO THE TEXTUAL REQUIREMENTS SET FORTH IN THIS STANDARD.

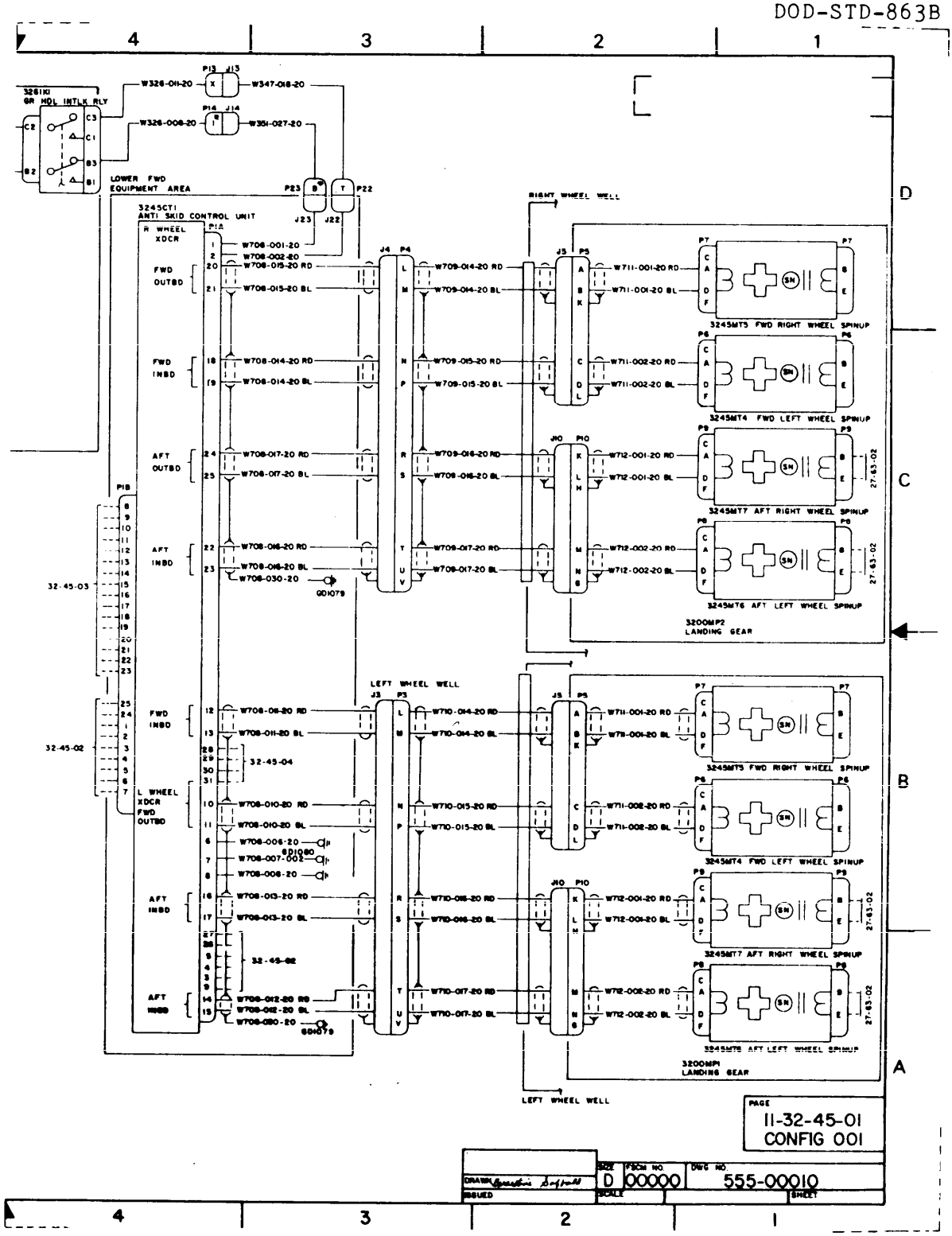

FIGURE 18. POINT TO POINT INTERCONNECT DIAGRAM (SHEET 2 OF 2)

THIS SAMPLE DRAWING IS INFORMATIONAL ONLY AND COMPLETE TO THE DEGREE NECESSARY TO ILLUSTRATE A TYPE OF DRAWING. ACTUAL FORMAT AND DRAWING SHALL CONFORM TO THE TEXTUAL REQUIREMENTS SET FORTH IN THIS STANDARD.

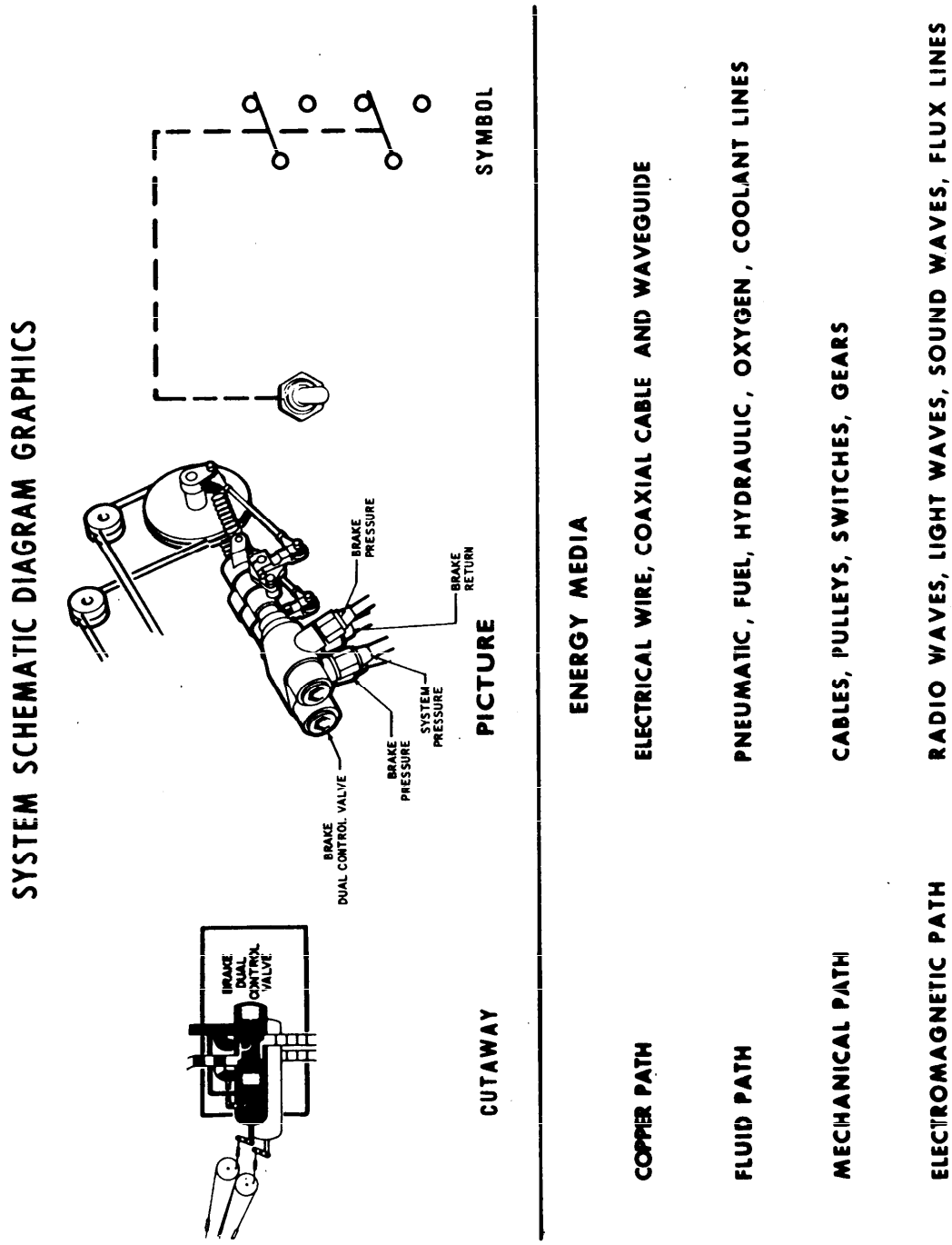

FIGURE 19. SYSTEM SCHEMATIC DIAGRAM GRAPHICS

THIS SAMPLE DRAWING IS INFORMATIONAL ONLY AND COMPLETE TO THE DEGREE NECESSARY TO ILLUSTRATE A TYPE OF DRAWING. ACTUAL FORMAT AND DRAWING SHALL CONFORM TO THE TEXTUAL REQUIREMENTS SET FORTH IN THIS STANDARD.

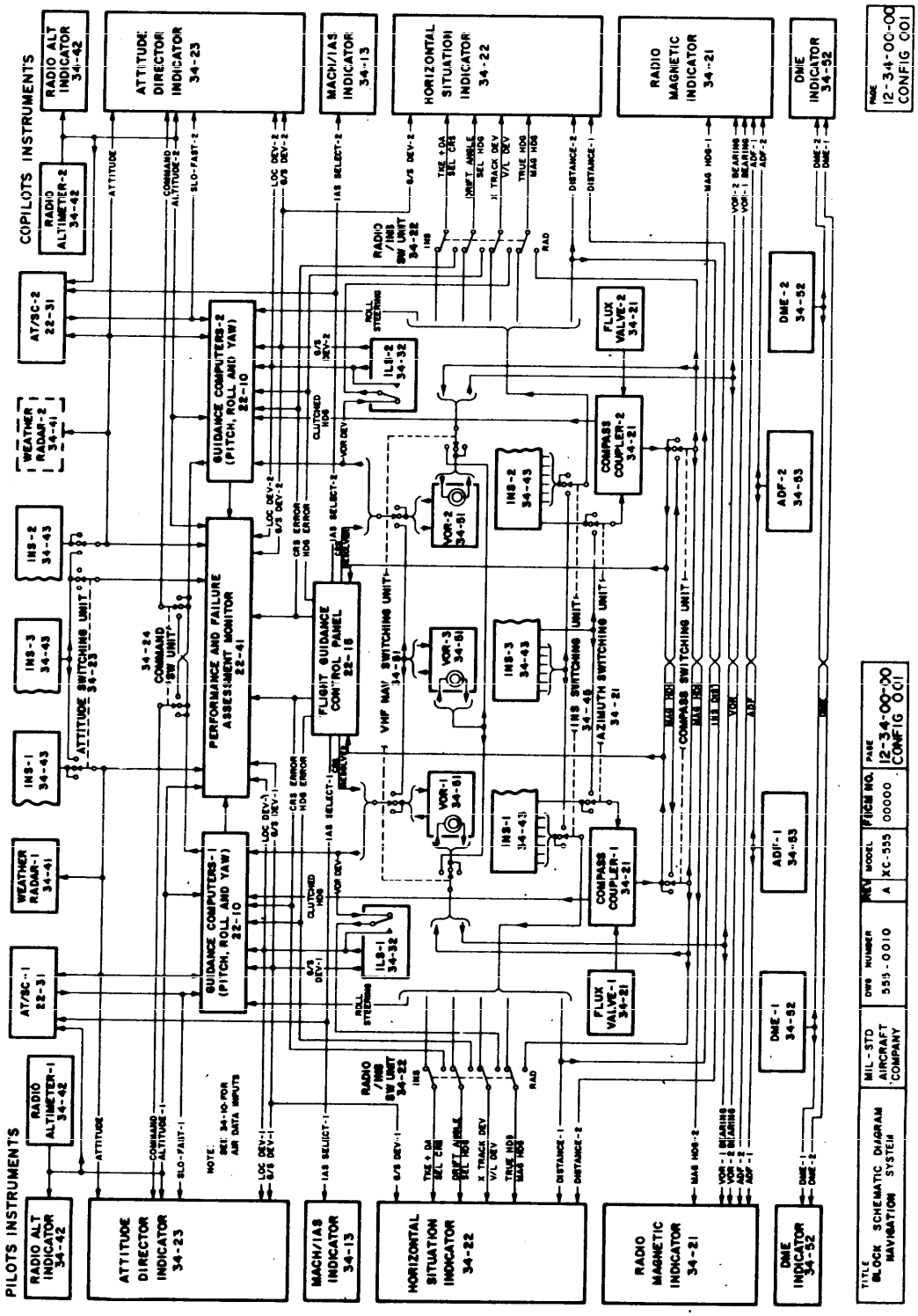

FIGURE 20. BLOCK SCHEMATIC DIAGRAM

THIS SAMPLE DRAWING IS INFORMATIONAL ONLY AND COMPLETE TO THE DEGREE NECESSARY TO ILLUSTRATE A TYPE OF DRAWING. ACTUAL FORMAT AND DRAWING SHALL CONFORM TO THE TEXTUAL REQUIREMENTS SET FORTH IN THIS STANDARD.

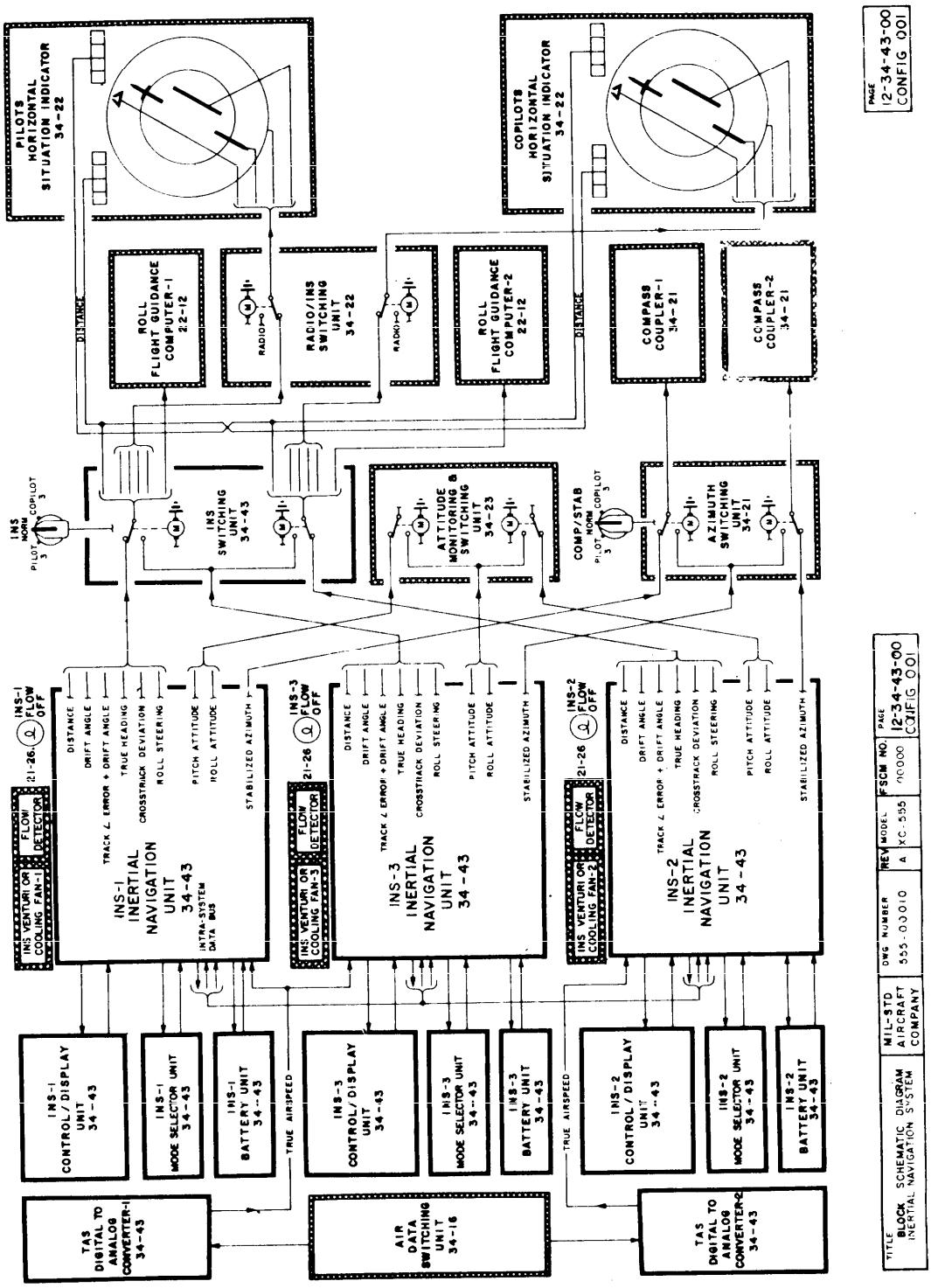

FIGURE 21. BLOCK SCHEMATIC DIAGRAM

THIS SAMPLE DRAWING IS INFORMATIONAL ONLY AND COMPLETE TO THE DEGREE NECESSARY TO ILLUSTRATE A TYPE OF DRAWING. ACTUAL FORMAT AND DRAWING SHALL CONFORM TO THE TEXTUAL REQUIREMENTS SET FORTH IN THIS STANDARD.

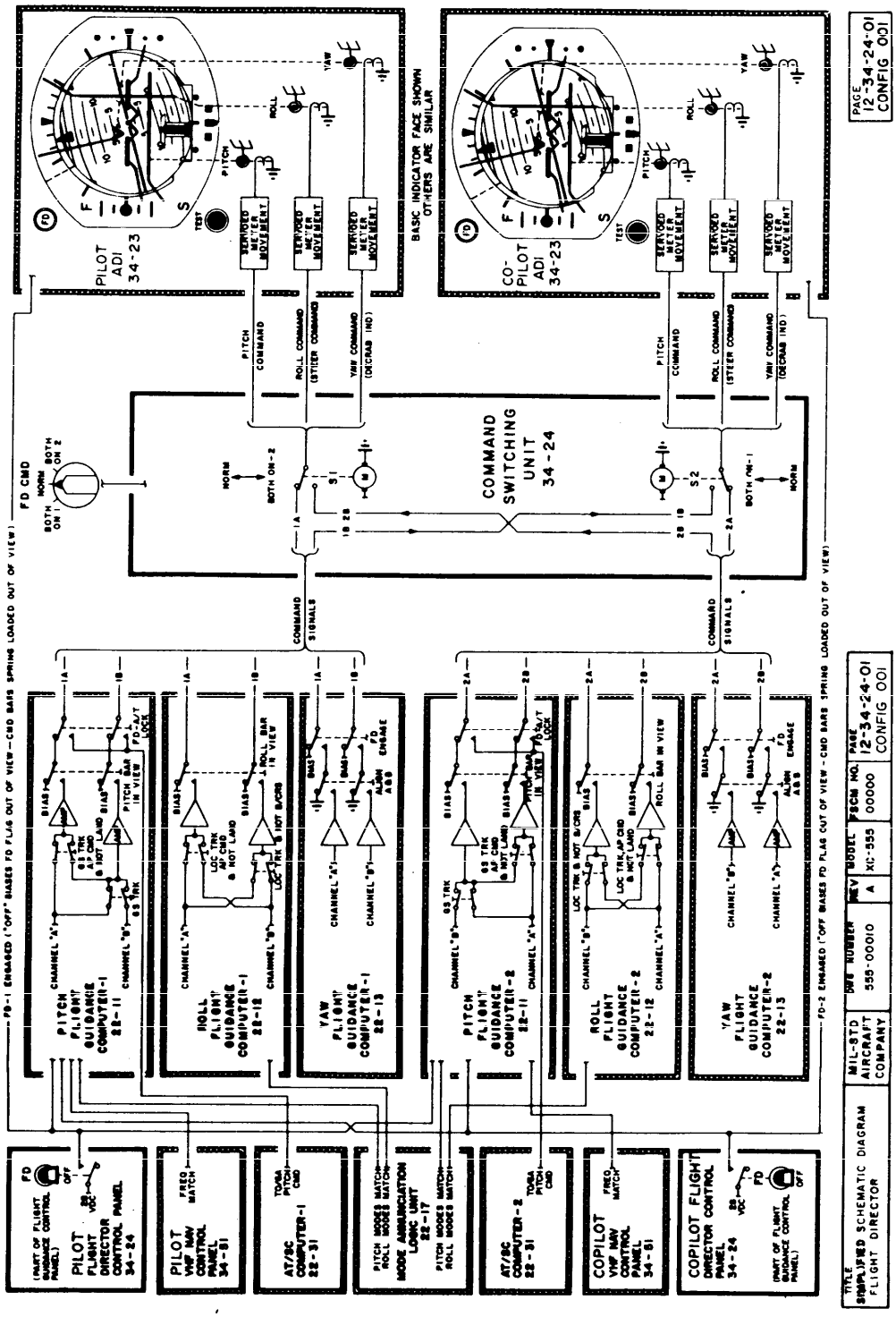

FIGURE 22. SIMPLIFIED SCHEMATIC DIAGRAM

THIS SAMPLE DRAWING IS INFORMATIONAL ONLY AND COMPLETE TO THE DEGREE NECESSARY TO ILLUSTRATE A TYPE OF DRAWING. ACTUAL FORMAT AND DRAWING SHALL CONFORM TO THE TEXTUAL REQUIREMENTS SET FORTH IN THIS STANDARD.

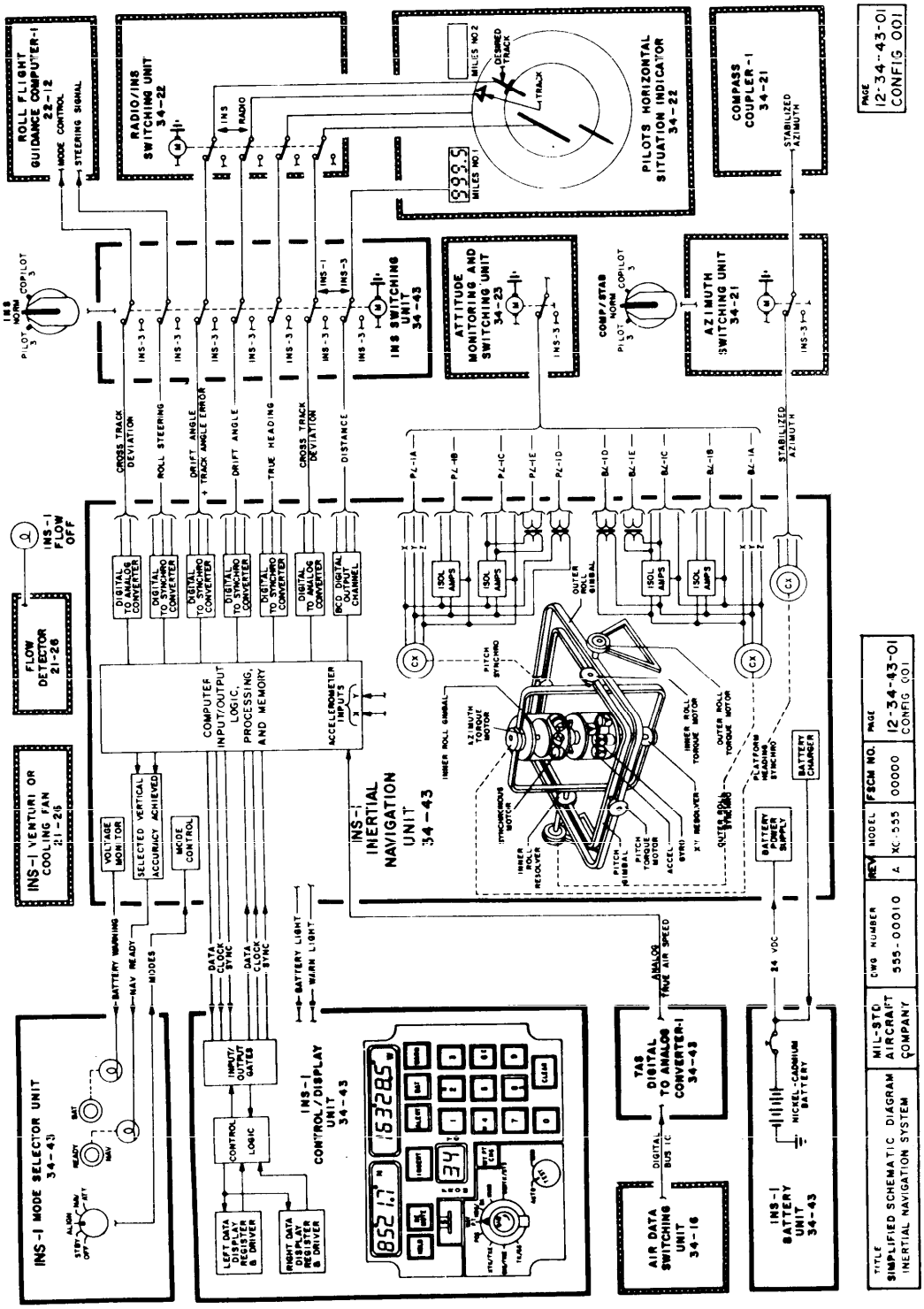

FIGURE 23. SIMPLIFIED SCHEMATIC DIAGRAM

THIS SAMPLE DRAWING IS INFORMATIONAL ONLY AND COMPLETE TO THE DEGREE NECESSARY TO ILLUSTRATE A TYPE OF DRAWING. ACTUAL FORMAT AND DRAWING SHALL CONFORM TO THE TEXTUAL REQUIREMENTS SET FORTH IN THIS STANDARD.

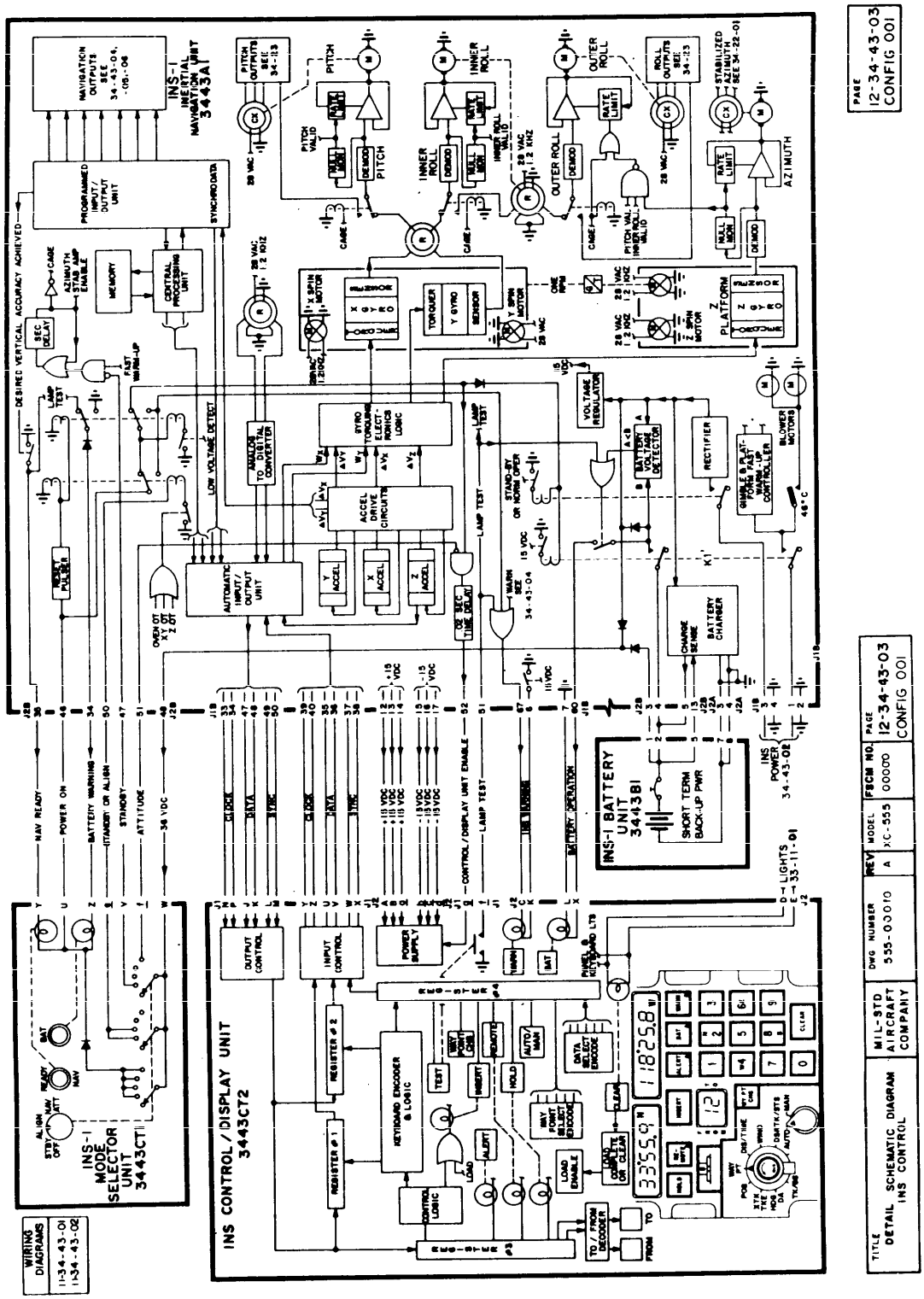

FIGURE 24. DETAIL SCHEMATIC DIAGRAM

THIS SAMPLE DRAWING IS INFORMATIONAL ONLY AND COMPLETE TO THE DEGREE NECESSARY TO ILLUSTRATE A TYPE OF DRAWING. ACTUAL FORMAT AND DRAWING SHALL CONFORM TO THE TEXTUAL REQUIREMENTS SET FORTH IN THIS STANDARD.

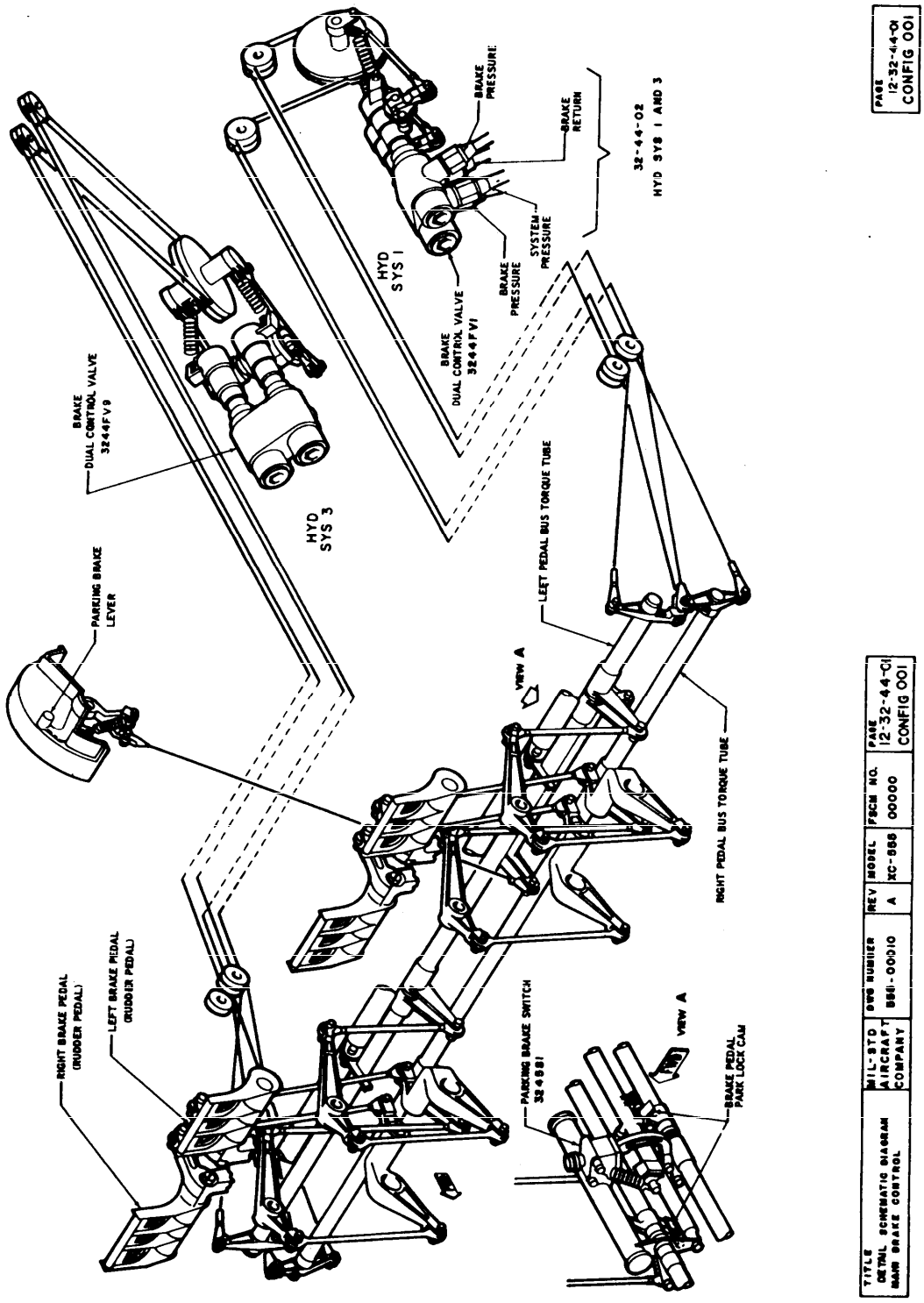

FIGURE 25. DETAIL SCHEMATIC DIAGRAM

THIS SAMPLE DRAWING IS INFORMATIONAL ONLY AND COMPLETE TO THE DEGREE NECESSARY TO ILLUSTRATE A TYPE OF DRAWING. ACTUAL FORMAT AND DRAWING SHALL CONFORM TO THE TEXTUAL REQUIREMENTS SET FORTH IN THIS STANDARD.

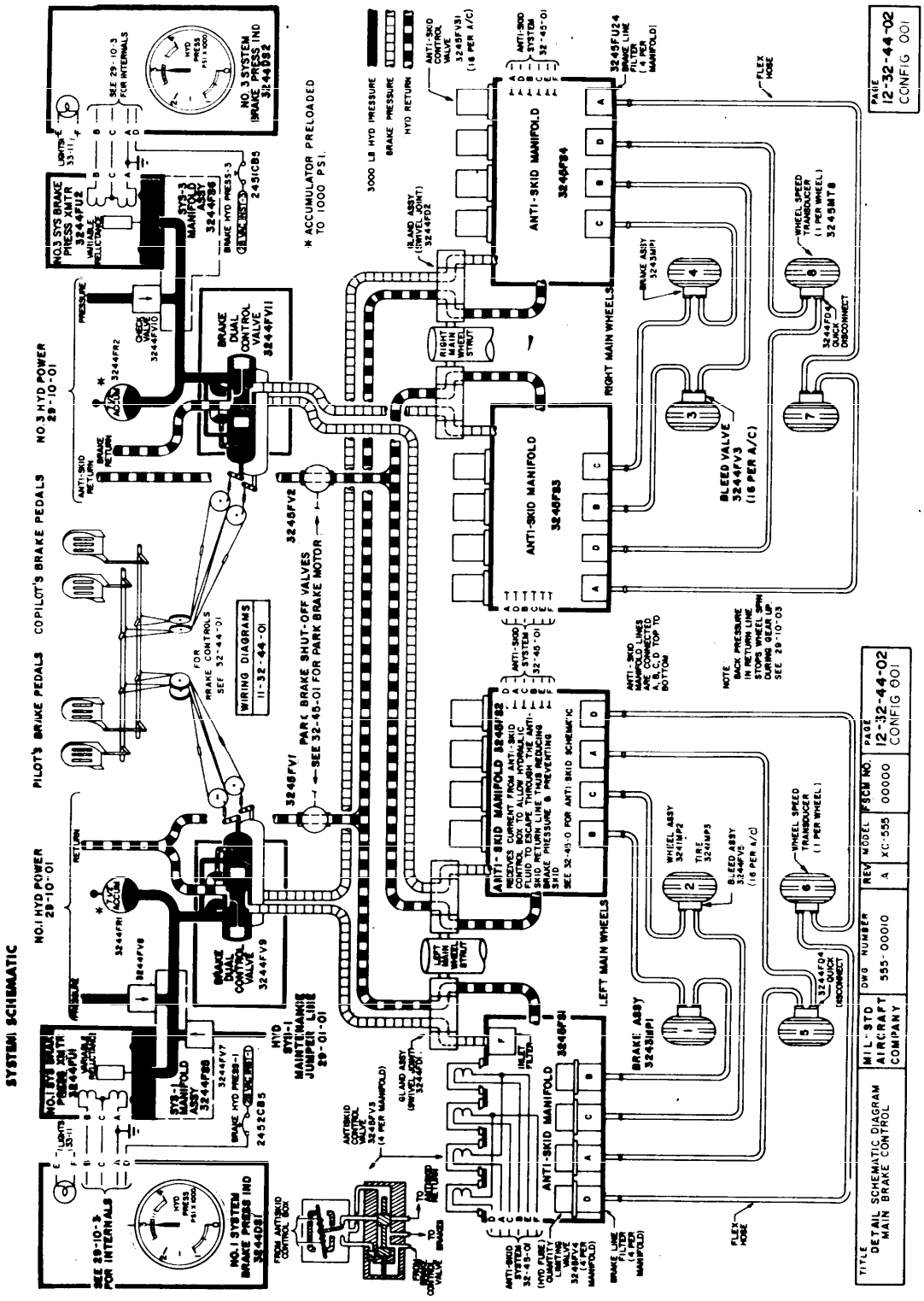

FIGURE 26. DETAILED SYSTEM SCHEMATIC DIAGRAM

THIS SAMPLE DRAWING IS INFORMATIONAL ONLY AND COMPLETE TO THE DEGREE NECESSARY TO ILLUSTRATE A TYPE OF DRAWING. ACTUAL FORMAT AND DRAWING SHALL CONFORM TO THE TEXTUAL REQUIREMENTS SET FORTH IN THIS STANDARD.

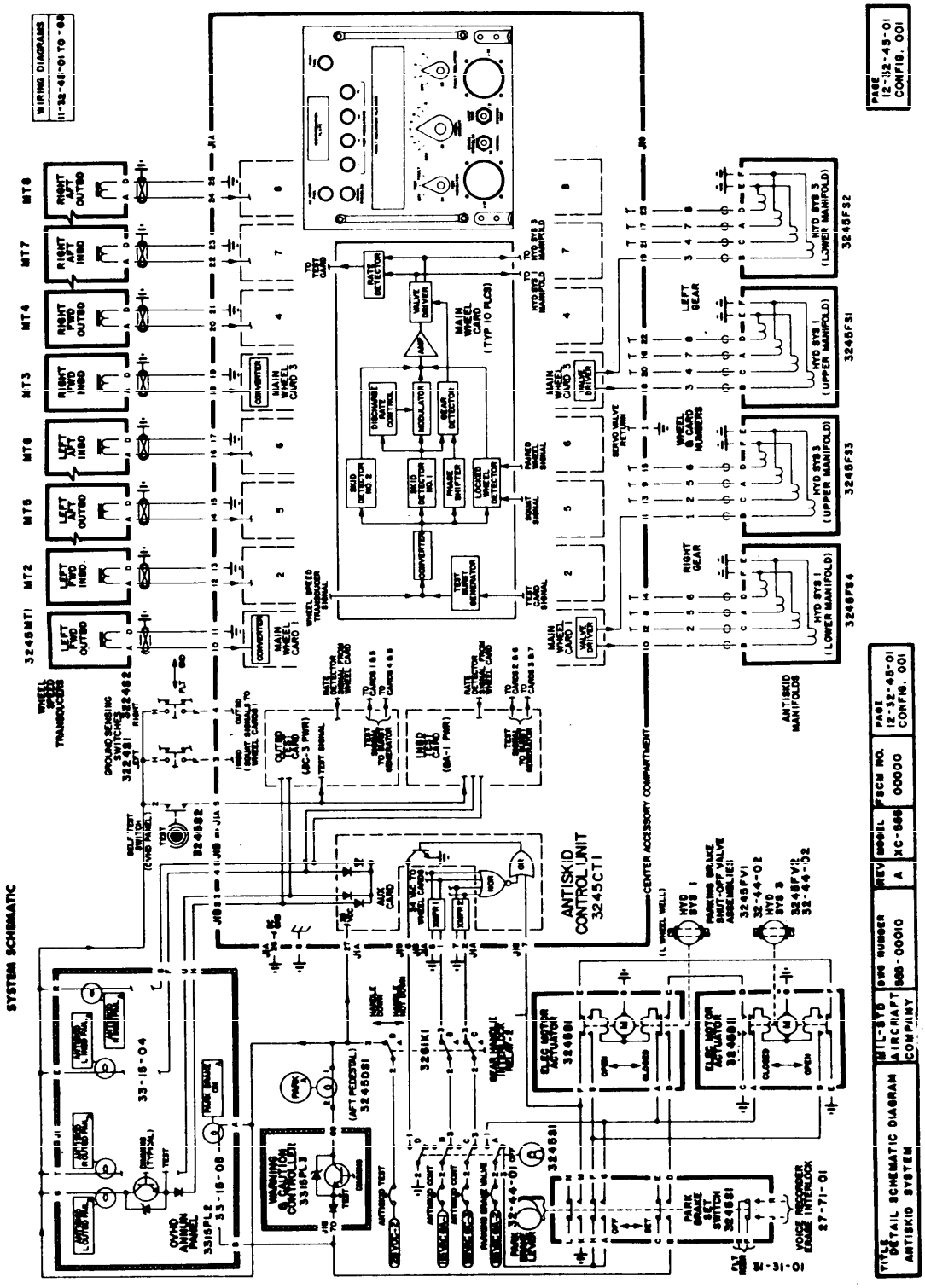

FIGURE 27. DETAIL SCHEMATIC DIAGRAM

THIS SAMPLE DRAWING IS INFORMATIONAL ONLY AND COMPLETE TO THE DEGREE NECESSARY TO ILLUSTRATE A TYPE OF DRAWING. ACTUAL FORMAT AND DRAWING SHALL CONFORM TO THE TEXTUAL REQUIREMENTS SET FORTH IN THIS STANDARD.

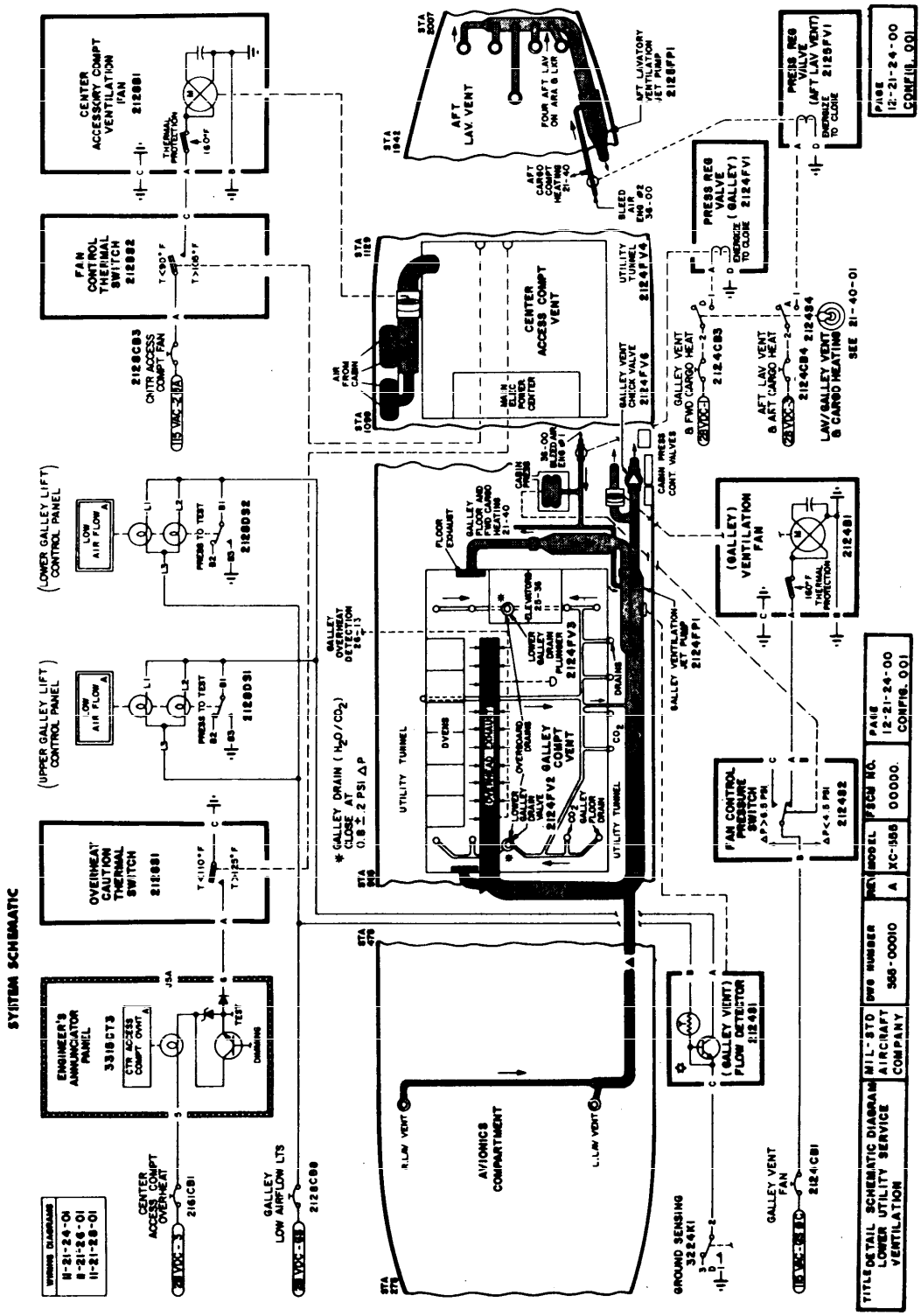

FIGURE 28. DETAIL SCHEMATIC DIAGRAM

THIS SAMPLE DRAWING IS INFORMATIONAL ONLY AND COMPLETE TO THE DEGREE NECESSARY TO ILLUSTRATE A TYPE OF DRAWING. ACTUAL FORMAT AND DRAWING SHALL CONFORM TO THE TEXTUAL REQUIREMENTS SET FORTH IN THIS STANDARD.

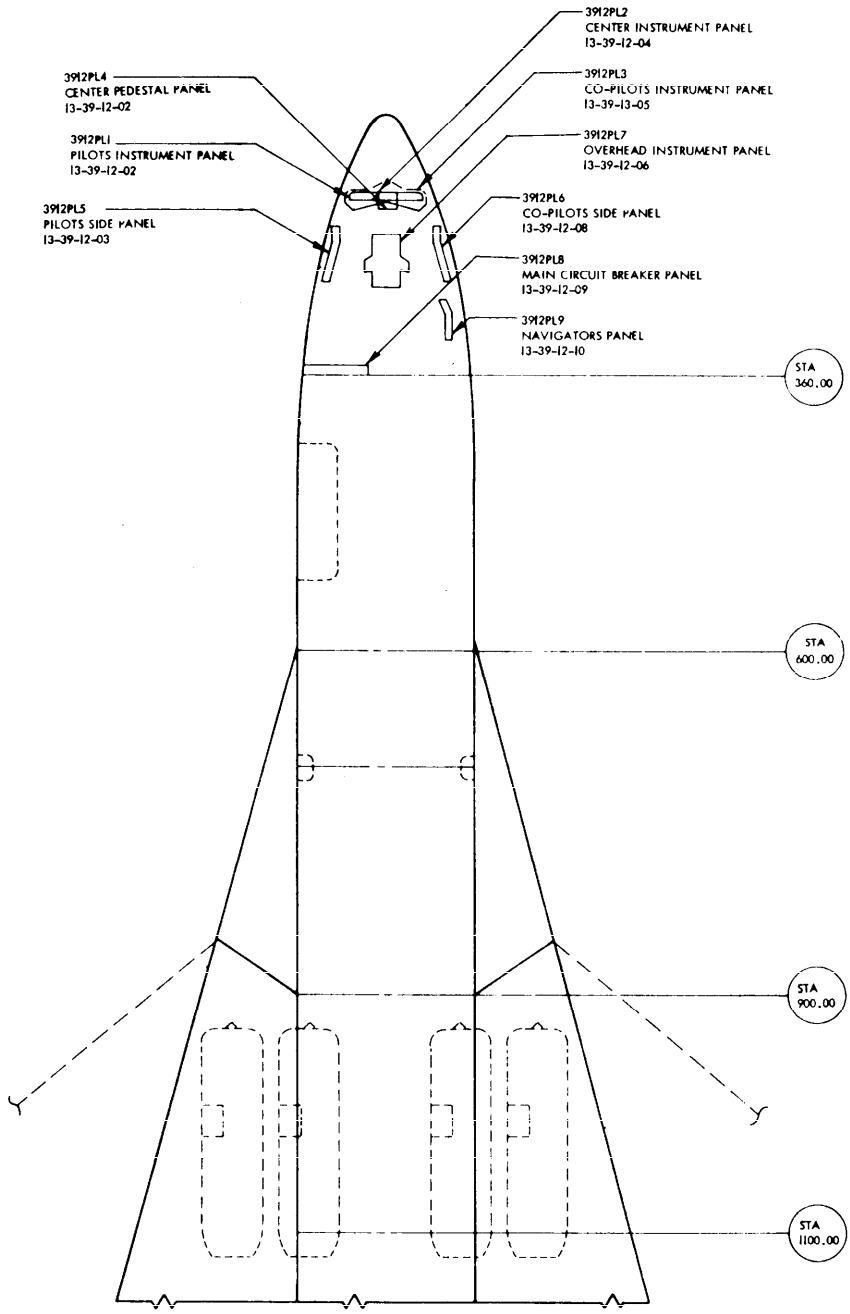

TITLE	MIL-STD	DRAWING NUMBER	REV	MODEL	FSCM NO.	PAGE
LOCATION DIAGRAM- PANELS-UPPER FUSELAGE	AIRCRAFT COMPANY	555-00010	B	XC-555	00000	13-39-12-01 CONFIG 001

FIGURE 29. EQUIPMENT LOCATION DIAGRAM

THIS SAMPLE DRAWING IS INFORMATIONAL ONLY AND COMPLETE TO THE DEGREE NECESSARY TO ILLUSTRATE A TYPE OF DRAWING. ACTUAL FORMAT AND DRAWING SHALL CONFORM TO THE TEXTUAL REQUIREMENTS SET FORTH IN THIS STANDARD.

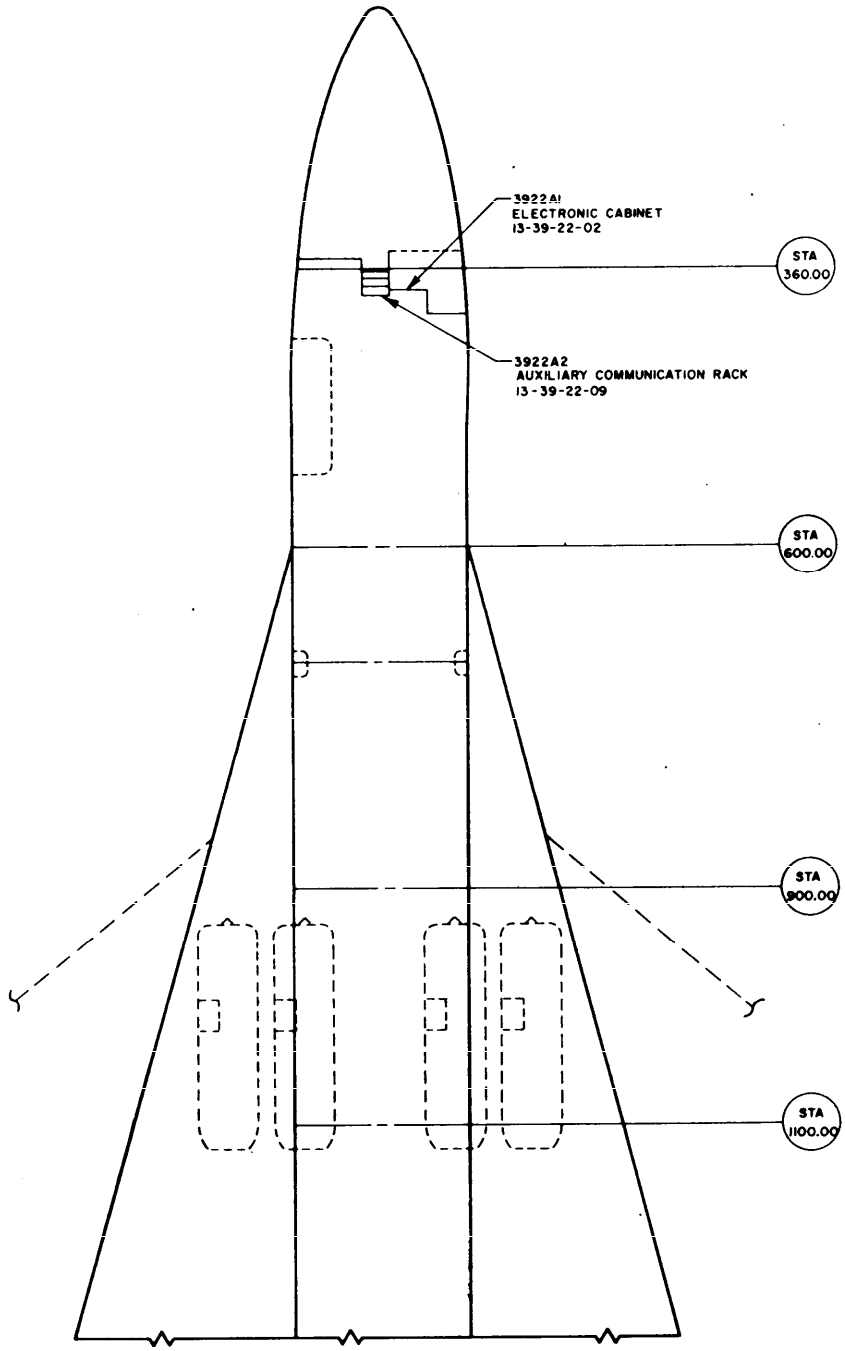

TITLE	MIL-STD	DRAWING NUMBER	REV	MODEL	FSCM NO.	PAGE
LOCATION DIAGRAM- EQUIP. RACKS-UPPER FUSELAGE	AIRCRAFT COMPANY	555-00010	B	XC-555	00000	13-39-22-01 CONFIG 001

FIGURE 30. EQUIPMENT LOCATION DIAGRAM

THIS SAMPLE DRAWING IS INFORMATIONAL ONLY AND COMPLETE TO THE DEGREE NECESSARY TO ILLUSTRATE A TYPE OF DRAWING. ACTUAL FORMAT AND DRAWING SHALL CONFORM TO THE TEXTUAL REQUIREMENTS SET FORTH IN THIS STANDARD.

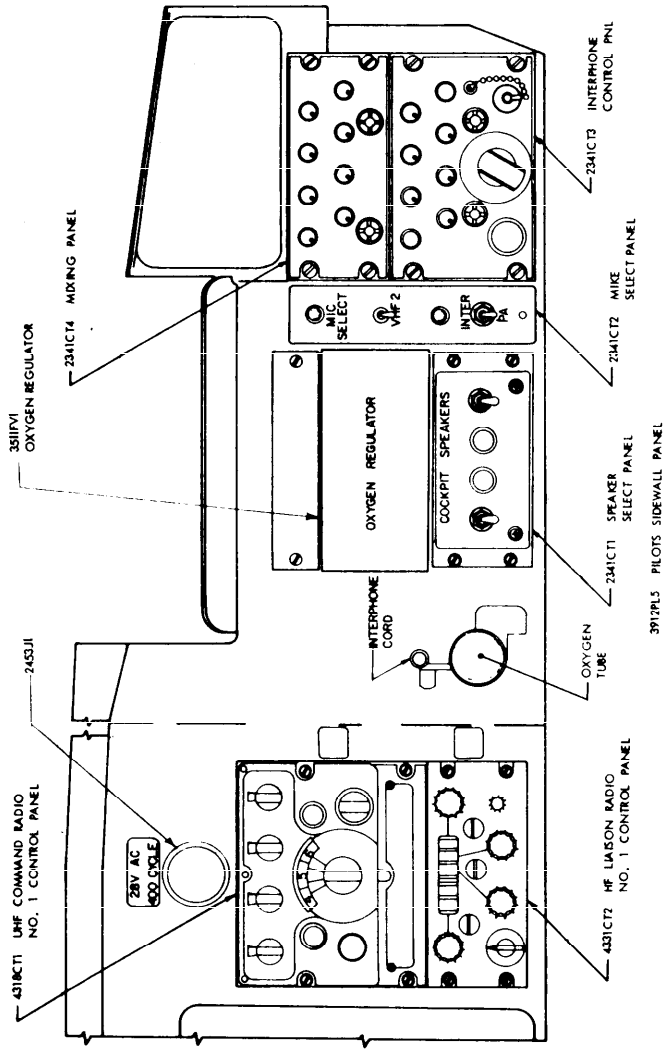

TITLE	MIL-STD	DRAWING NUMBER	REV	MODEL	CODE IDENT	PAGE
LOCATION CHART- PILOTS SIDEWALL PANEL(3912PL5)	AIRCRAFT COMPANY	555-00010	B	XC-555	00000	13-39-12-03 CONFIG-001

FIGURE 31. EQUIPMENT LOCATION DIAGRAM

THIS SAMPLE DRAWING IS INFORMATIONAL ONLY AND COMPLETE TO THE DEGREE NECESSARY TO ILLUSTRATE A TYPE OF DRAWING. ACTUAL FORMAT AND DRAWING SHALL CONFORM TO THE TEXTUAL REQUIREMENTS SET FORTH IN THIS STANDARD.

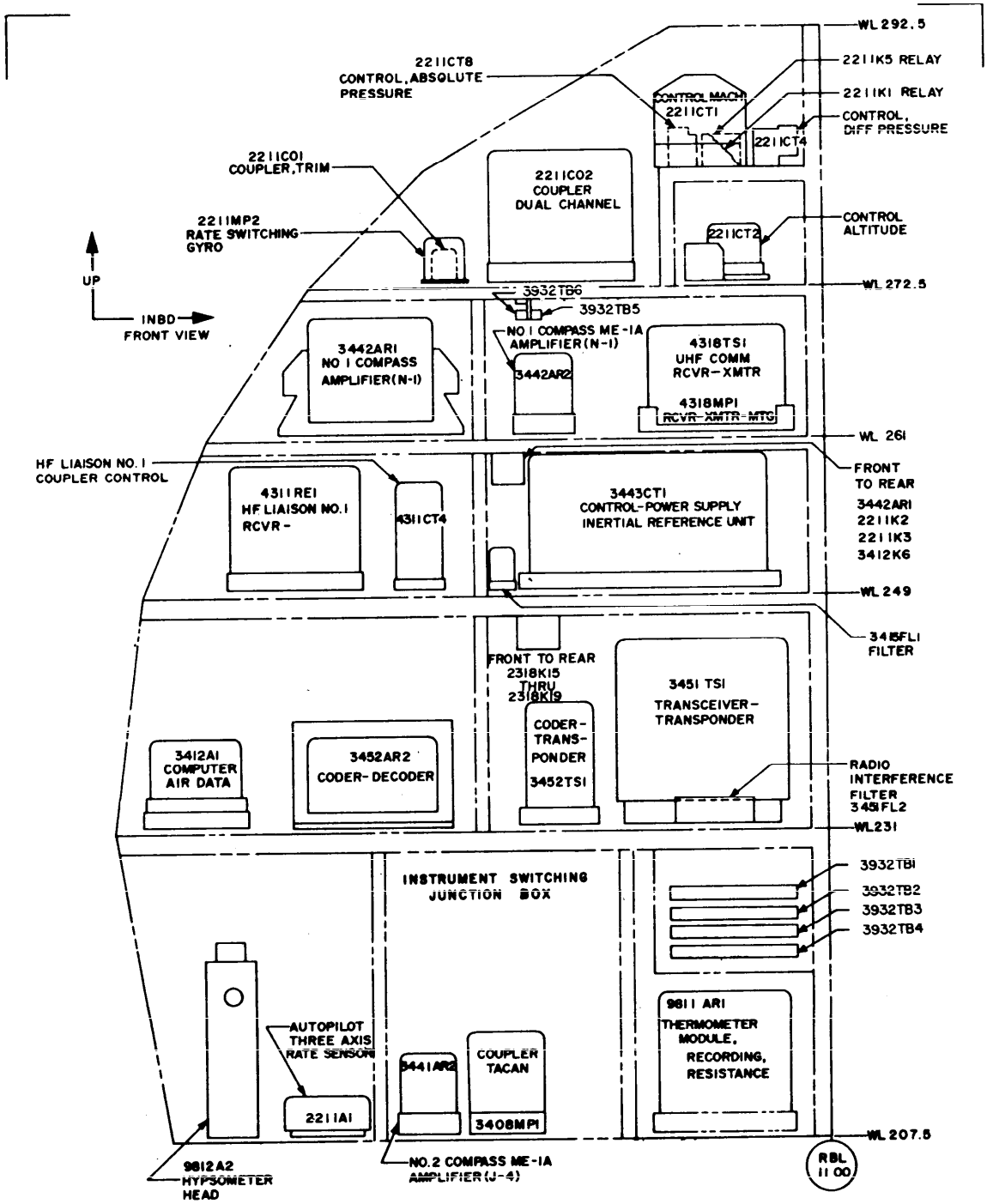

TITLE	MIL-STD	DRAWING NUMBER	REV	MODEL	CODE IDENT NO.	PAGE
CHART - ELECTRONICS CABINET EQUIPMENT LOCATION (FRONT VIEW) 3922A1	AIRCRAFT COMPANY	555-00010	A	XC-555A	00000	13-39-22-02 CONFIG-001

FIGURE 32. EQUIPMENT LOCATION DIAGRAM

THIS SAMPLE DRAWING IS INFORMATIONAL ONLY AND COMPLETE TO THE DEGREE NECESSARY TO ILLUSTRATE A TYPE OF DRAWING. ACTUAL FORMAT AND DRAWING SHALL CONFORM TO THE TEXTUAL REQUIREMENTS SET FORTH IN THIS STANDARD.

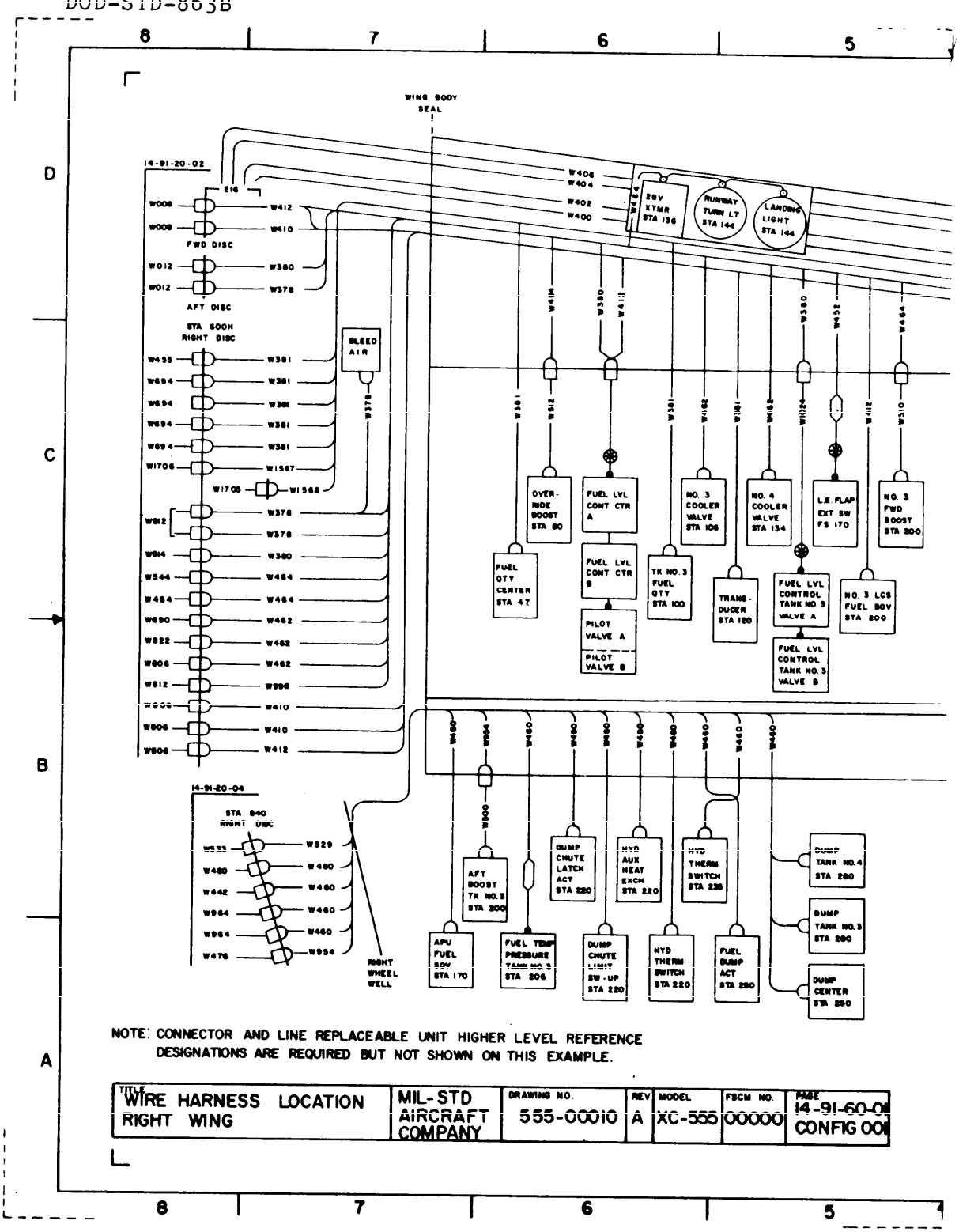

FIGURE 33. WIRE HARNESS LOCATION DIAGRAM (SHEET 1 OF 2)

THIS SAMPLE DRAWING IS INFORMATIONAL ONLY AND COMPLETE TO THE DEGREE NECESSARY TO ILLUSTRATE A TYPE OF DRAWING. ACTUAL FORMAT AND DRAWING SHALL CONFORM TO THE TEXTUAL REQUIREMENTS SET FORTH IN THIS STANDARD.

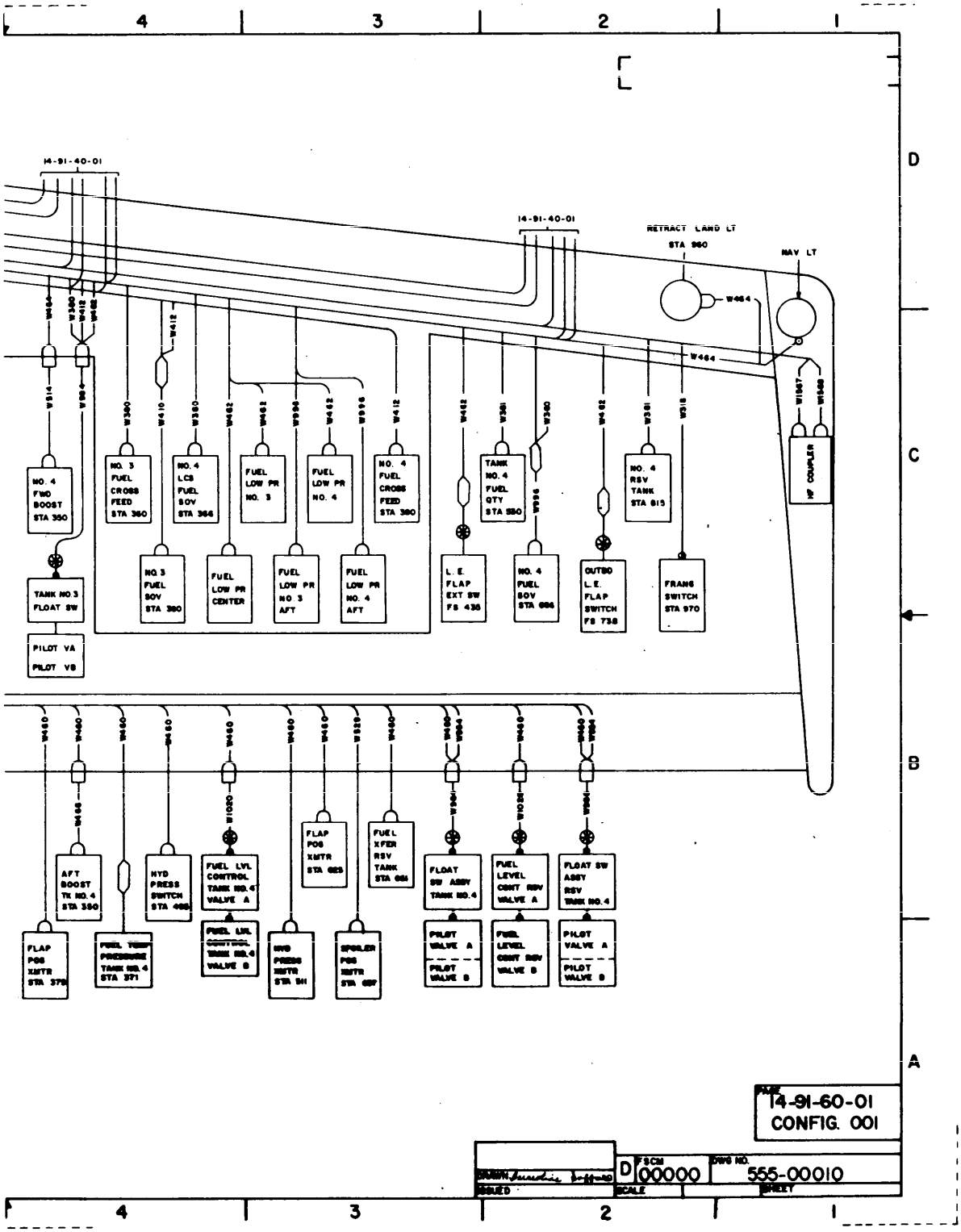

FIGURE 33. WIRE HARNESS LOCATION DIAGRAM (SHEET 2 OF 2)

THIS SAMPLE DRAWING IS INFORMATIONAL ONLY AND COMPLETE TO THE DEGREE NECESSARY TO ILLUSTRATE A TYPE OF DRAWING. ACTUAL FORMAT AND DRAWING SHALL CONFORM TO THE TEXTUAL REQUIREMENTS SET FORTH IN THIS STANDARD.

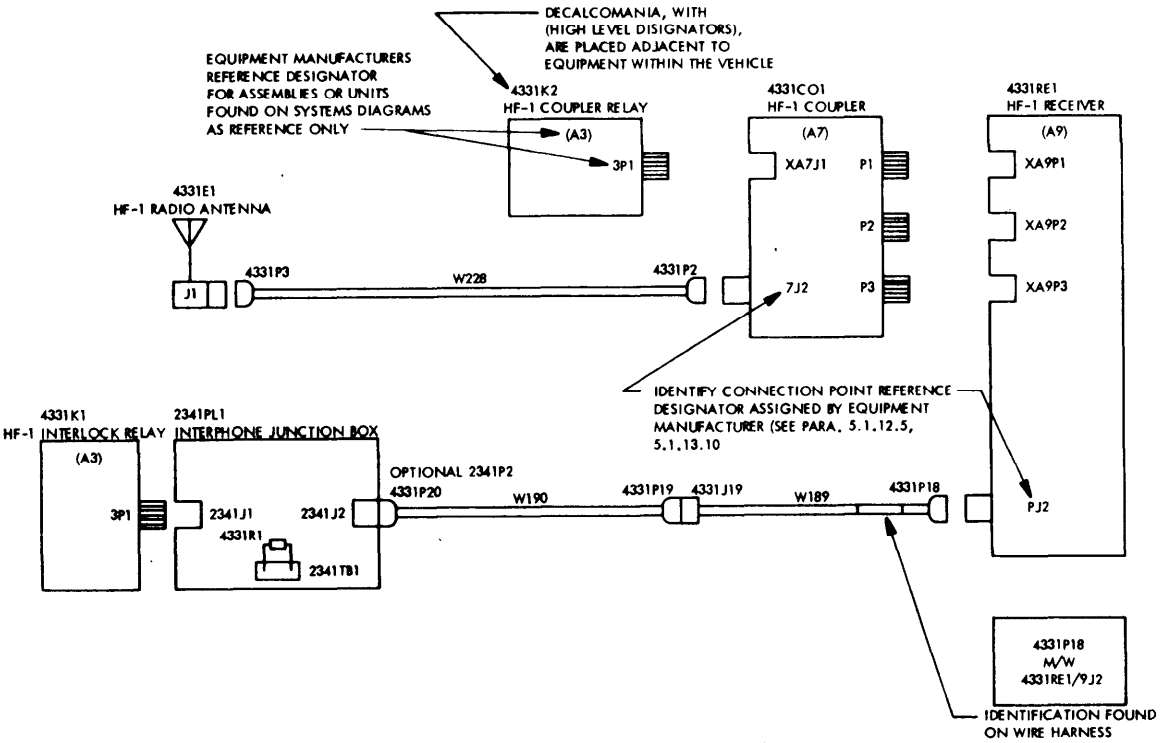

FIGURE 34. HIGHER LEVEL DESIGNATIONS (SYSTEM CODED)

FIGURE 35. TERMINAL SIZE SYMBOLS

THIS SAMPLE DRAWING IS INFORMATIONAL ONLY AND COMPLETE TO THE DEGREE NECESSARY TO ILLUSTRATE A TYPE OF DRAWING. ACTUAL FORMAT AND DRAWING SHALL CONFORM TO THE TEXTUAL REQUIREMENTS SET FORTH IN THIS STANDARD.

APPENDIX A

10. SCOPE

10.1 This appendix adds a text development key and a system/sub-system/subject numbering system to this standard.

20. APPLICATION DOCUMENTS

20.1 There are no additional applicable documents.

30. REQUIREMENTS

30.1 System/sub-system/subject (S/S/SN numbering system). The numbering system is a conventional dash number breakdown which provides a means for dividing material into system, sub-system, and function. The following instructions provide general and detail procedures for constructing the system/sub-system/subject numbers using the numbers assigned herein. The S/S/SN is annotated on each text page throughout the wiring and schematic diagrams and is used as a reference key to locate needed data.

30.1.1 Number composition. The S/S/SN is composed of three elements which consist of two digits each, as in the following example:

FIRST ELEMENT	SECOND ELEMENT	THIRD ELEMENT	COVERAGE
SYSTEM	SUB-SYSTEM	FUNCTION	
26 ----	00 ----	00 ----	Material which is applicable to the system as a whole.
(SYSTEM) "Fire Protection"			
26 ----	20 ----	00 ----	Material which is applicable to the sub-system as a whole.
	(SUB-SYSTEM) "Extinguishing"		
26 ----	22 ----	00 ----	Material which is applicable to the subsub-system as a whole. This number (digit) is assigned by the manufacturer.
	(SUB-SYSTEM) "Engine Fire Extinguishing		

FIRST ELEMENT	SECOND ELEMENT	THIRD ELEMENT	COVERAGE
SYSTEM	SUB-SYSTEM	FUNCTION	
26 ----	22 ----	03 ----	Material which is applicable to a specific function of the sub-sub-system. Both digits are assigned by the manufacturer. If they are not specified herein.
		: (Function) "Bottles"	

30.2 Diagram numbering. The following definitions of the system/sub-system/function which are included in the numbering guide, shall be used as a basis for sequencing/developing the wiring and schematic diagram numbering system.

SYS	SUB-SYS	TITLE	DEFINITION
1-19		Reserved	

AIRFRAME SYSTEMS

DEFINITION

All airframe systems except the Power Plant package.

SYS	SUB-SYS	TITLE	DEFINITION
20		Reserved	

SYS	SUB-SYS	TITLE	DEFINITION
21		AIR CONDITIONING	Those units and components which furnish a means of pressurizing, heating, cooling, moisture controlling, filtering, and treating the air used to ventilate the areas of the fuselage within the pressure seals. Includes cabin supercharger, equipment cooling, heater fuel system, expansion turbine, valves, scoops, ducts, etc.
	-00	General	
	-10	Compression	That portion of the system and its controls which supplies compressed air to the cabin. Includes items such as controls and indicating systems related to the compressors, wiring, etc. Does not include the pressure control and indicating system for the cabin pressurization.
	-20	Distribution	That portion of the system used to induct and distribute air. Includes equipment rack cooling systems and items such as blowers, scoops, ducting, inlets, check valves, wiring, etc. Does not include valves which are part of pressurization and temperature control.
	-30	Pressurization Control	That portion of the system used to control the pressure within the fuselage. Includes items such as control valves, relief valves, indicators, switches, amplifiers, wiring, etc.
	-40	Heating	That portion of the system and its controls which supply heated air to the cabin. Includes items such as heater units, fuel system and control, ignition, indicating systems related to heater operation, wiring, etc. Does not include the temperature control and indicating systems.
	-50	Cooling	That portion of the system and its controls which supply cooled air to the cabin. Includes items such as the cooling unit, indicating systems related to the cooler operation, wiring, etc. Does not include temperature control and indicating systems.

SYS	SUB-SYS	TITLE	DEFINITION
21 (Cont'd)			
	-60	Temperature Control	That portion of the system used to control the temperature of the air within the cabin. Includes items such as control valves, thermal sensing devices, switches, indicators, amplifiers, wiring, etc.
	-70	Moisture/Air	That portion of the system used to control moisture in the air, to control ozone concentrations, to filter radioactive debris from conditioned air, and to treat the air with deodorizers, insecticides, etc.

SYS	SUB-SYS	TITLE	DEFINITION
22		AUTO FLIGHT	Those units and components which furnish a means of automatically controlling the flight of the aircraft. Includes those units and components which control direction, heading, attitude, altitude and speed.
	-00	General	
	-10	Autopilot	That portion of the system that uses radio/radar beam, directional and vertical gyro, pitot static and manually induced inputs to the system to automatically control yaw, pitch and roll of the aircraft. This includes power source devices, interlocking devices and amplifying, computing, integrating, controlling, actuating, indicating, and warning devices such as computers, servo, control panels, indicators, warning lights, etc.
	-20	Speed-Attitude Correction	That portion of the system that automatically maintains a safe flight attitude by correcting for effects of speed, such as mach trim and speed stability. This includes sensing, computing, actuating, indicating, and warning devices such as computers, servos, actuators, warning lights, etc.
	-30	Auto Throttle	That portion of the system that automatically controls the position of the throttles to properly blend engine power with flap position and aircraft pitch attitude during landing/approach and go around procedures. This includes engaging, sensing, computing, amplifying, controlling, actuating and warning devices such as amplifiers, computers, servos, limit switches, clutches, gear boxes, warning lights, etc.
	-40	System Monitor	That portion of the system that monitors the flight of aircraft during approach and landing. This includes sensing, computing, indicating and warning devices such as computers, indicators, warning lights, etc.

SYS	SUB-SYS	TITLE	DEFINITION
23		COMMUNICATIONS CREW	Those units and components which furnish a means of communicating from one part of the aircraft to another and between the aircraft or ground stations, includes voice and C-W communicating components, PA systems, intercom and tape recorder-record player.
	-00	General	
	-10	High Frequency (HF)	That portion of the system which is used for aircraft to ground communications utilizing HF carriers. Includes items such as transmitters, receivers, power supply, control panel, antenna, antenna coupler, etc.
	-20	Very High and Ultra High Frequency	That portion of the system which is used for aircraft to gound communication utilizing VHF or UHF carriers. Includes items such as transmitters, receivers, control panel, decal decoder, antenna, etc.
	-30	Passenger Address and Entertainment	That portion of the system used to address and entertain the passengers. Includes items such as amplifiers, speakers, handsets, reproducers, control panels, etc. Also includes items of audio, video and film equipment.
	-40	Interphone	That portion of the system which is used by flight and ground personnel to communicate between areas on the aircraft. Includes items such as amplifiers, handset, etc. Does not include the interphone system within the flight compartment which is part of the integrating system.
	-50	Audio Integrating	That portion of the system which controls the output of the communications and navigation receivers into the flight crew headphones and speakers and the output of the flight crew microphones into the communications transmitters. Includes items such as audio selector control panel, microphones, headphones, cockpit loudspeakers, etc.

SYS	SUB-SYS	TITLE	DEFINITION
23 (cont'd)			
	-60	Static	That portion of the system which is used to dissipate static electricity.
	-70	Audio & Video	Those installations that record or monitor crew or passenger conversation or movement for security or safety purposes. Includes voice recorders, television, monitors, etc.

SYS	SUB-SYS	TITLE	DEFINITION
24		ELECTRICAL POWER	Those electrical units and components which generate, control and supply AC and/or DC electrical power for other systems, including generators and relays, inverters, batteries, etc., through the secondary busses. Also includes common electrical items such as wiring switches, connectors, etc.
	-00	General	
	-10	Generator Drive	Mechanical devices that drive the generators at a desired RPM. Includes items such as oil system, connecting devices, indicating and warning systems for the drive, etc.
	-20	AC Generation	That portion of the systems used to generate, regulate, control, and indicate AC electrical power. Includes items such as inverters, AC generators/alternators, control and regulating components, indicating systems, etc., all wiring to but not including main busses.
	-30	DC Generation	That portion of the systems used to generate, regulate, control and indicate DC electrical power. Includes items such as generators/alternators, transformers, rectifiers, batteries, control and regulating components, indicating systems, etc., all wiring to but not including main busses.
	-40	External Power	That portion of the system within the aircraft which connects external electrical power to the aircraft's electrical system. Includes items such as receptacles, relays, switches, wiring, warning lights, etc.
	-50	Electrical Load Distribution	That portion of the system which provides for connection of AC or DC power to using systems. Includes items such as AC and DC main and secondary busses, main system circuit breakers, power system devices, etc.

SYS	SUB-SYS	TITLE	DEFINITION
25		EQUIPMENT/ FURNISHINGS	Those removable items of equipment and furnishings externally mounted on the aircraft or contained in the flight, passenger, cargo and accessory compartments. Includes emergency, buffet and lavatory equipment. Does not include structures or equipment assigned specifically to other systems.
	-00	General	
	-10	Flight Compartment	The compartment above the floor and between the forward passenger partition and the forward pressure dome. Includes items such as flight crew seats, tables, pilot check lists, pilot food containers, curtains, manuals, spare bulbs, fuses, etc. Does not include cargo compartments.
	-20	Passenger Compartment	The areas in which the passengers are seated. Includes lounges but not dressing rooms. Includes items such as seats, berths, hatracks, curtains, wall coverings, and sound-proofing, carpets, magazine racks, movable partitions, wall-type thermometers, spare bulbs, fuses, etc.
	-30	Buffet/Galley	The areas in which food and beverages are stored and prepared. Includes items such as removable and fixed cabinets, ovens, refrigerators, garbage containers, dish racks, coffee maker and dispensers, containers, electrical outlets, wiring, etc.
	-40	Lavatories	The toilet and dressing room areas containing wash basins, dressing tables, and water closet. Includes items such as mirrors, seats, cabinets, dispensing equipment, electrical outlets, wiring, etc. Wash basins and water closets are included in System 38.

SYS	SUB-SYS	TITLE	DEFINITION
25 (Cont'd)			
	-50	Cargo Compartments	Those compartments for storage of cargo and those components which are or can be mounted on the aircraft and used to load/unload, restrain, guide or service cargo. Includes drive systems, rollers, latches, restraint nets. etc.
	-60	Emergency	Those items of equipment carried for use in emergency procedures. Includes items such as evacuation equipment, life rafts, jackets, emergency radio beacons, underwater locater devices, first aid kit, landing and signal flares, drag parachutes, evacuation signaling systems, etc. Does not include fire extinguishers, oxygen equipment or masks.
	-70	Accessory Compartments	Those compartments used for the housing of various components or accessories. Includes wheel well, tail-hydraulic-electrical/ electronic equipment racks, main battery structure, insulation blankets, etc.

SYS	SUB-SYS	TITLE	DEFINITION
26		FIRE PROTECTION	Those fixed and portable units and components which detect and indicate fire or smoke and store and distribute fire extinguishing agents to all protected areas of the aircraft; including bottles, valves, tubing etc.
	-00	General	
	-10	Detection	That portion of the system which is used to sense and indicate the presence of overheat, smoke, or fire.
	-20	Extinguishing	That portion of those fixed or portable systems which is used to extinguish fire.
	-30	Explosion Suppression	That portion of the system which is used to sense, indicate and extinguish a flame propagating into the fuel vent or scoop to prevent an explosion in the fuel system.

SYS	SUB-SYS	TITLE	DEFINITION
27		FLIGHT CONTROLS	Those units and components which furnish a means of manually controlling the flight attitude characteristics of the aircraft, including items such as hydraulic boost system, rudder pedals, control column linkages, control cables, tab controls, mounting brackets, etc. Also includes the functioning and maintenance aspects of the flaps, spoilers and other control surfaces, but does not include the structure which is covered in the Structures System. Does not include rotorcraft rotor controls which are covered in the Rotor Systems.
	-00	General	
	-10	Aileron & Tab	That portion of the systems which controls the position and movement of the ailerons and aileron tabs. Includes items such as the control wheels, cables, boosters, linkages, control surfaces, indicators, servoes, etc.
	-20	Rudder & Tab	That portion of the systems which controls the position and movement of the rudder and rudder tabls. Includes items such as the rudder pedals, tab control wheel, cables, boosters, linkages, control surfaces, position indicators, servoes, etc.
	-30	Elevator & Tab	That portion of the systems which controls the position and movement of the elevator/elevon and tabs. Includes items such as the control column, stickshaker units, automatic stall recovery devices, tab control wheels, cables, boosters, linkages, control surfaces, position indicators, stall warning systems, servoes, etc.
	-40	Horizontal Stabilizers	That portion of the system which controls the position and movement of the horizontal stabilizer/canard. Includes items such as control handle, cables, jackscrews, motors, warning systems, linkages, control surfaces, position indicators, servoes, etc.

SYS	SUB-SYS	TITLE	DEFINITION
27 (Cont'd)			
	-50	Flaps	That portion of the systems which controls the position and movement of the trailing edge flaps. Includes items such as control handles, cables, actuators, warning systems, linkages, control surfaces, position indicators, servoes, etc.
	-60	Spoiler, Drag Devices and Variable Aerodynamic Fairings	That portion of the systems which controls the position and movement of the spoilers, drag devices and variable aerodynamic fairings. Includes items such as control handles, cables, warning systems, linkages, spoilers, drag devices, position indicators, servoes, etc.
	-70	Gust Lock & Dampener	That portion of the systems which protects the control surfaces from movement by wind while the aircraft is on the ground. Does not include locking the control by means of flight control boost system.
	-80	Lift Augmenting	That portion of the system which controls the position and movement of variable opening wing slots, leading edge wind flaps, and other similar auxiliary devices used for increasing aerodynamic lift. Includes items such as control handles, cables, actuators, linkages, warning systems, control surfaces, position indicators, etc. Does not include trailing edge flaps.

SYS	SUB-SYS	TITLE	DEFINITION
28		FUEL	Those units and components which store and deliver fuel to the engine. Includes engine driven fuel pumps for reciprocating engines, includes tanks (Bladder), valves, boost pumps, etc., and those components which furnish a means of dumping fuel overboard. Includes integral and tip fuel tank leak detection and sealing. Does not include the structure of integral or tip fuel tanks and the fuel cell backing boards which are covered in System 73.
	-00	General	
	-10	Storage	That portion of the system which stores fuel. Includes tank sealing, bladder type cells, ventilating system, cell and tank interconnectors, over wing filler necks and caps, etc. Also includes reservoir feed pumping systems and reservoirs within the tanks which are not a part of the distribution system.
	-20	Distribution	That portion of the system which is used to distribute fuel from the filler connector to the storage system and from the storage system to and including the power plant fuel quick disconnect. Includes items such as plumbing, pumps, valves, controls, etc.
	-30	Dump	That portion of the system which is used to dump fuel overboard during flight. Includes items such as plumbing, valves, chutes, controls, etc.
	-40	Indicating	That portion of the system which is used to indicate the quantity, temperature, and pressure of the fuel. Includes pressure warning systems for pumping systems within the tank, etc. Does not include engine fuel flow or pressure.

SYS	SUB-SYS	TITLE	DEFINITION
29		HYDRAULIC POWER	Those units and components which furnish hydraulic fluid under pressure (includes pumps, regulators, lines, valves, etc.) to a common point (manifold) for redistribution to other defined systems.
	-00	General	
	-10	Main	That portion of the system which is used to store and deliver hydraulic fluid to using systems. Includes items such as tanks, accumulators, valves, pumps, levers, switches, cables, plumbing, wiring, external connectors, etc. Does not include the supply valves to the using systems.
	-20	Auxiliary	That portion of the system which is classified as auxiliary, emergency or standby, and which is used to supplement or take the place of the main hydraulic system. Includes items such as tanks and accumulators which are separate from the main system, hand pumps, auxiliary pumps, valves, plumbing, wiring, etc.
	-30	Indicating	That portion of the system which is used to indicate the quantity, temperature and pressure of the hydraulic fluid. Includes items such as transmitters, indicators, wiring, warning systems, etc.

SYS	SUB-SYS	TITLE	DEFINITION
30		ICE AND RAIN PROTECTION	Those units and components which provide a means of preventing or disposing of formation of ice and rain on various parts of the aircraft. Includes alcohol pump, valves, tanks, propeller/rotor anti-icing system, wing heaters, water line heaters, pitot heaters, scoop heaters, windshield wipers and the electrical and heated air portion of windshield ice control. Does not include the basic windshield panel. For turbine type power plants using air as the anti-icing medium, engine anti-icing is contained under Air System.
	-00	General	
	-10	Airfoil	That portion of the system which is used to eliminate or prevent the formation of ice on all airfoil surfaces. Includes wings, airfoil sections of the empennage, and pylons.
	-20	Air Intakes	That portion of the system which is used to eliminate or prevent the formation of ice in or around air intakes. Includes power plant cowling anti-icing.
	-30	Pitot and Static	That portion of the system which is used to eliminate or prevent the formation of ice on the pitot and static systems.
	-40	Windows and Windshields	That portion of the system which is used to eliminate or prevent the formation of ice, frost or rain on the windows and windshields.
	-50	Antennas and Radomes	That portion of the system which is used to eliminate or prevent the formation of ice on antennas and radomes.
	-60	Propellers/ Rotors	That portion of the system which is used to eliminate or prevent the formation of ice on propellers or rotors. Includes all components up to but not including rotating assembly.

SYS	SUB-SYS	TITLE	DEFINITION
30 (Cont'd)			
	-70	Water Lines	That portion of the system which is used to prevent the formation of ice in water supply and drain lines.
	-80	Detection	That portion of the system which is used to detect and indicate the formation of ice.

SYS	SUB-SYS	TITLE	DEFINITION
31		INDICATING/ RECORDING SYSTEMS	Those units or components which give visual or aural warning of conditions in unrelated systems. Units which record, store, or compute data from unrelated systems.
	-00	General	
	-10	Unassigned	
	-20	Unassigned	
	-30	Recorders	Those units and components used for recording data not related to specific systems. Includes items such as flight recorders, performance or maintenance recorders, VG recorders, etc.
	-40	Central Computers	Those units used for computing data from a number of different sources without a preponderance of functions in any one system.
	-50	Central Warning Systems	Those units and components which give audible or visual warning of conditions in unrelated systems.

SYS	SUB-SYS	TITLE	DEFINITION
32		LANDING GEAR	Those units and components which furnish a means of supporting and steering the aircraft on the ground or water, and make it possible to retraact and store the landing gear in flight. Includes tail skid assembly, arresting hooks, drag chutes, brakes, wheels, floats, skids, skis, doors, shock struts, tires, linkages, position indicating and warning systems. Also includes the functioning and maintenance aspects of the landing gear doors but does not include the structure which is covered in System 52 DOORS.
	-00	General	
	-10	Main Gear and Doors	That portion of the system which provides the major support for the aircraft while on the ground. Includes items such as shock struts, bogie axles, drag struts, doors, linkages, attach bolts, etc.
	-20	Nose Gear and Doors	That portion of the system which supports the nose of the aircraft while the aircraft is on the ground. Includes items such as shock struts, drag struts, doors, linkages, attach bolts, etc.
	-30	Extension and Retraction	That portion of the system which is used to extend and retract the landing gear and open and close the landing gear doors. Includes items such as actuating mechanisms, bogie trim, bungees, up and down latches, operating controls, valves and motors, cables, wiring, plumbing, etc.
	-40	Wheels and Brakes	That portion of the system which provides for rolling and stopping the aircraft while on the ground and stopping wheel rotation after retraction. Includes items such as bearings, tires, valves, de-boosters, swivel glands, anti-skid devices, pressure indicators, plumbing, etc.

SYS	SUB-SYS	TITLE	DEFINITION
32 (Cont'd)			
	-50	Steering	That portion of the system which is used to control the direction of movement of the aircraft on the ground. Includes items such as actuating cylinders, controls, bogie swivel unlock, etc.
	-60	Position and Warning	That portion of the system which is used to indicate and warn of the position of the landing gear/doors. Includes items such as switches relays, lights, indicators, horns, wiring, etc.
	-70	Supplementary Gear	Devices used to stabilize the aircraft while on the ground and prevent damage by ground contact. Includes items such as shock strut, skid block, wheels, etc.
	-80	Drag Chute	That portion of the system used to aid in slowing the speed of the aircraft when landing.
	-90	Arresting Hook	That portion of the system which is used to extend, retract and indicate the position of, an arresting hook.

SYS	SUB-SYS	TITLE	DEFINITION
33		LIGHTS	Those units and components which provide for external and internal illumination such as landing lights, taxi lights, position lights, rotating lights, ice lights, master warning lights, passenger reading and cabin dome lights, etc. Includes bulbs, light fixtures, switches and wiring. Does not include warning lights for individual systems.
	-00	General	
	-10	Flight Compartment	The lighting sub-systems in the compartment above the floor and between the forward passenger partition and the forward pressure dome. Does not include cargo compartment. Includes direct and indirect illumination of work areas, panels and instruments. Does not include bulbs and wiring inside of instruments which are removed with the instrument. Includes the master warning light system and the warning light dimming systems.
	-20	Passenger Compartments	The lighting sub-systems in the areas in which the passengers are seated and in buffet/galley, lavatories, lounges and coat rooms. Includes items such as direct and indirect illumination, passenger call system, lighted signs, etc.
	-30	Cargo and Service	The lighting sub-systems in the compartments for stowage of cargo and the housing of various components or accessories.
	-40	Exterior	The lighting sub-systems used to provide illumination outside of the aircraft. Includes lights such as landing, navigation, position indicating, wing illumination, rotating, courtesy, taxi, etc.
	-50	Emergency Lighting	The separate and independent sub-systems used to provide illumination in case of primary electrical power failure. Includes items such as inertia flashlights, lanterns, etc.

SYS	SUB-SYS	TITLE	DEFINITION
34		NAVIGATION	Those units and components which provide aircraft navigational information. Includes VOR, pitot, static, ILS, flight director, compasses, indicators, etc.
	-00	General	
	-10	Flight Environment Data	That portion of the system which senses environmental conditions and uses the data to influence navigation. Includes items such as pitot, static, air temperature, rate-of-climb, airspeed, high speed warning, altitude, altitude reporting, altimeter correction system, etc.
	-20	Attitude and Direction	That portion of the system which used magnetic gyroscopic and inertia forces. Includes items such as gyro horizons, directional gyros, magnetic compasses, and magnetic heading systems, turn and bank, amplifiers, servoes, and flight director, etc.
	-30	Landing and Taxiing Aids	That portion of the system which provides guidance during approach, landing and taxiing. Includes items such as localizer, glide slope, ILS, markers, paravisual director, ground guidance systems, etc.
	-40	Independent Position Determining	That portion of the system which provides information to determine position and is mainly independent on ground installations. Includes items such as inertial guidance systems, weather radar, doppler, proximity warning, collision avoidance, star tracker, etc. Also includes sextants/octant, etc.
	-50	Dependent Position Determining	That portion of the system which provides information to determine position and is mainly dependent on ground installations. Includes items such as DME, transponders, radio compass, LORAN, VOR, ADF, TACAN, etc.
	-60	Position Computing	That portion of the system which combines navigational information to compute the aircraft's geographical location. Includes items such as course computers, etc.

SYS	SUB-SYS	TITLE	DEFINITION
35		OXYGEN	Those units and components which store, regulate, and deliver oxygen to the passengers and crew, including bottles, relief valves, shut-off valves, outlets, regulators, masks, walk-around bottles, etc.
	-00	General	
	-10	Crew	That portion of the system which furnishes oxygen to the crew.
	-20	Passenger	That portion of the system which furnishes oxygen to the passengers.
	-30	Portable	That portion of the system which has an independent oxygen supply and which can be transported about the airplane.

SYS	SUB-SYS	TITLE	DEFINITION
36		PNEUMATIC	Those units and components (Ducts and Valves) which deliver large volumes of compressed air from a power source to connecting points for such other systems as air conditioning, pressurization, de-icing, etc.
	-00	General	
	-10	Distribution	That portion of the system which is used to distribute high or low pressure air to using systems. Includes items such as ducts, valves, actuators, heat exchangers, controls, etc. Does not include the supply valves to the using systems.
	-20	Indicating	That portion of the systems which is used to indicate temperature and pressure of the pneumatic system. Includes temperature and pressure warning system.

SYS	SUB-SYS	TITLE	DEFINITION
37		VACUUM	Those units and components used to generate, deliver and regulate negative air pressure, including pumps, regulators, lines, etc., through and including the manifold.
	-00	General	
	-10	Distribution	That portion of the system which is used to distribute negative pressure air to using systems.
	-20	Indicating	That portion of the system which is used to indicate pressure. Includes pressure warning system.

SYS	SUB-SYS	TITLE	DEFINITION
38		WATER/WASTE	Those fixed units and components which store and deliver for use, fresh water, and those fixed components which store and furnish a means of removal of water and waste. Includes wash basins, toilet assemblies, tanks, valves, etc.
	-00	General	
	-10	Potable	That portion of the system which is used to store and deliver fresh drinking water. Includes wash water system if the potable water is also used for washing.
	-20	Wash	That portion of the system which is used to store and deliver wash water which is not potable.
	-30	Waste Disposal	That portion of the system which is used for disposal of water and waste. Includes items such as wash basins, water closets, flushing systems, etc.
	-40	Air Supply	That portion of the system common to more than one sub-system which is used for pressurizing supply tanks to insure fluid flow.

SYS	SUB-SYS	TITLE	DEFINITION
39		ELECTRICAL/ ELECTRONIC PANELS & MULTIPURPOSE-COMPONENTS	Pictorial coverage of all indicating and control panels and electrical/electronic rack installations. Full coverage of all general purpose electrical and electronic components.
	-00	General	
	-10	Instrument and Control Panels	Pictorial coverage of all panels fixed or movable, with their replaceable components such as instruments (inclusive of independent instruments), switches, circuit breakers, fuses, etc. Also includes general coverage of instrument panel vibrators and other panel accessories.
	-20	Electrical and Electronic Equipment Racks	Pictorial and general coverage for all electrical and electronic equipment racks.
	-30	Electrical and Electronic Junction Boxes	Pictorial and general coverage of junction boxes.
	-40	Multipurpose Electronic Components	Contains general coverage for switches, circuit breakers, fuses, synchros, motors, capacitors, resistors, transistors and other discrete electrical and electronic components.
	-50	Integrated Circuits	Contains general coverage of those devices having integrated components, in monolithic structure, which perform complete circuit functions. Includes integrated Logic devices.
	-60	Printed Circuit Card Assemblies	Contains general coverage of plug-in assemblies or sub-assemblies which perform a complete circuit function and are used on more than one specific system. Includes Power Supply Cards, Isolation Amplifiers, Servo Control Modules.

SYS	SUB-SYS	TITLE	DEFINITION
40		CARGO HANDLING	Include only those items that are general to the vehicle and are too broad in nature to be included in the following categories. Do not include items that belong in System 25, such as litters, seats, pallets, etc.
	-00	General	
	-10	Loading and Transport	Those items in the cargo compartment provided for the restraint, guidance conveyance and servicing of cargo. Includes drive systems, rollers, tiedowns, rails, locks, pallets/nets, containers and barrier nets.
	-20	Auxiliary Equipment	Cargo winches, pulley blocks, loading ramps, support/stabilizing struts, tethering devices, and other items specifically required for handling of cargo not listed in 40-10.
	-30	Aerial Delivery Cargo	Those items required for the air drop of cargo. Includes DCS & ADS platforms, deployment and extraction parachutes, drogue chute, load release mechanisms and load transfer devices.
	-40	Aerial Delivery Personnel	Those items required for the air drop of personnel including anchor cables static lines, parachutes, retrieval winches, jump light, etc.
	-50	Indication and Control	Those items required for normal and emergency indication and control of all cargo handling and aerial delivery functions. Includes remote and fixed control of winches. Cargo ramp and door are listed in System 52-30.
	-60	Placards	Instruction and warning.

SYS	SUB-SYS	TITLE	DEFINITION
41-42		Reserved	

SYS	SUB-SYS	TITLE	DEFINITION
43		COMMUNICATIONS STAFF	Those units and components which furnish the Staff means of communicating from one part of the aircraft to another and between the aircraft or ground stations, includes voice and C-W communicating components, PA system, intercom and tape recorder-record player.
	-10	Ultra High Frequency (UHF)	That portion of the system which is used for aircraft to ground communications utilizing UHF carriers. Includes items such as transmitters, receivers, control panel, decal decoder, antenna, etc.
	-20	Very High Frequency (VHF)	That portion of the system which is used for aircraft to ground communications utilizing VHF carriers. Includes items such as transmitters, receivers, control panel, selcal decoder, antenna, etc.
	-30	High Frequency (HF)	That portion of the system which is used for aircraft to ground communications utilizing HF carriers. Includes items such as transmitters, receivers, power supply, control panel, antenna, antenna coupler, etc.
	-40	VLF/LF Radio	That portion of the system which is used for aircraft to ground communications utilizing VLF/LF carriers. Includes items such as transmitters, receivers, power supply, control panel, antenna, antenna coupler, etc.
	-50	Audio Integrating	That portion of the system which controls the output of the communications and navigation receivers into the Staff passengers' headphones and speakers and the output of the Staff passengers' microphones into the communications transmitters. Includes items such as audio selector control panel, microphones, headphones, loudspeakers, etc.
	-60	Digital	That portion of the system which is used for aircraft to aircraft or aircraft to ground stations utilizing C-W. Includes items such as teletypewriters, modems, keyers, encryption devices, etc.

SYS	SUB-SYS	TITLE	DEFINITION
43 (Cont'd)			
	-70	Multiplex and Audio Switching	That portion of the system which is used for telephone communications between aircraft or ground stations. Includes items such as telephones and multiplexing equipment.
	-80	Interphone and Passenger Address	That portion of the system used to address the Staff passengers and which is used by Staff personnel to communicate between areas of the aircraft. Includes items such as amplifiers, speakers, handsets, control panels, audio, video, and film equipment. Does not include the interphone system within the flight compartment which is part of the integrating system.
	-90	Satellite Communications	That portion of the system which is used for aircraft to satellite communications. Includes items such as receivers, transmitters, motems, amplifiers, etc.

SYS	SUB-SYS	TITLE	DEFINITION
44		Reserved	

SYS	SUB-SYS	TITLE	DEFINITION
45-48		Reserved	

SYS	SUB-SYS	TITLE	DEFINITION
49		AIRBORNE AUXILIARY POWER	Those airborne power plants (engines) which are installed on the aircraft for the purpose of generating and supplying a single type or combination of auxiliary electric, hydraulic, pneumatic or other power. Includes power and drive section, fuel, ignition and control systems; also wiring, indicators, plumbing, valves, and ducts up to the power unit. Does not include generators, alternators, hydraulic pumps, etc., or their connecting systems which supply and deliver power to their respective aircraft systems.
	-00	General	
	-10	Power Plant	For definitions, see System 71
	-20	Engine	For definitions, see System 72.
	-30	Engine Fuel and Control	For definitions, see System 73.
	-40	Ignition/ Starging	For definitions, see Systems 74 and 80.
	-50	Air	For definitions, see System 75.
	-60	Engine Controls	For definitions, see System 76.
	-70	Indicating	For definitions, see System 77.
	-80	Exhaust	For definitions, see System 78.
	-90	Oil	For definitions, see System 79.

SYS	SUB-SYS	TITLE	DEFINITION
50		Reserved	

SYS	SUB-SYS	TITLE	DEFINITION
51		STRUCTURES	Those subjects that are general in nature to the entire structure of the aircraft. Includes standard practices applicable to structures.
	-00	General	

SYS	SUB-SYS	TITLE	DEFINITION
52		DOORS	Those removable units used for entrance or exit, and for enclosing other structure contained within the fuselage. Includes passenger and crew doors, cargo doors, emergency exits, etc. Electrical and hydraulic systems associated with door control are included as appropriate.
	-00	General	
	-10	Passenger/Crew	The doors used for entrance and exit of the passengers and crew to and from the aircraft. Includes items such as structure, latching mechanisms, handles, insulation, lining, controls, integral steps, ramps, handrails, etc.
	-20	Emergency Exit	The exit doors used to facilitate evacuation that are not normally used for exit. Includes items such as structure, latching mechanisms, handles, insulation, lining, controls, etc.
	-30	Cargo	The exterior doors used primarily to gain access to cargo compartments. Includes items such as structure, latching mechanisms, handles, insulation, lining, controls, integral steps, ramps, handrails, etc.
	-40	Service	The exterior doors used primarily to gain access for servicing aircraft systems and equipment. Includes items such as structure, latching mechanisms, handles, insulation, lining, controls, integral steps, handrails, etc.
	-50	Fixed Interior	The doors inside the fuselage installed in fixed partitions. Includes items such as structure, latching mechanisms, handles, lining, etc. Does not include doors installed in movable partitions which are covered in System 25.

SYS	SUB-SYS	TITLE	DEFINITION
52 (Cont'd)			
	-60	Entrance Stairs	The stairs which operate in conjunction with but are not an integral part of entrance doors. Stairs whose primary structure is a door shall be covered under the appropriate topic. Includes items such as structure, actuating mechanisms and controls, hand-rails, etc.
	-70	Door Warning	That portion of the system which is used to indicate whether the doors are closed and properly latched. Includes items such as switches, lights, bells, horns, etc. Does not include landing gear door warning which is covered in System 32.
	-80	Landing Gear	The structure of the doors used to enclose the landing gear compartments.

SYS	SUB-SYS	TITLE	DEFINITION
53		FUSELAGE	The structural units and associated components/members which make up the compartments for equipment, passengers, crew and cargo; including skin, belt frames, stringers, floor beams, floor, pressure dome, scuppers, tail cone, fuselage to wing and empennage fillets, etc.
	-00	General	
	-10	Main Frame	The primary skeleton of the fuselage. Includes frames, bulkheads, formers, longerons, stringers, keel, frames around openings, etc.
	-20	Auxiliary Structure	The secondary structure of the fuselage. Includes floors, internal stairs, and fixed partitions. Does not include movable partitions which are covered in System 25.
	-30	Plates/Skin	The exterior covering of the fuselage including access covers and doublers.
	-40	Attach Fittings	The fittings on the fuselage used for the attachment of doors, wings, stabilizers, landing gear, engine and rotor pylons, and for the support of equipment within the fuselage. Includes items such as seat tracks, cargo basket rails, instrument brackets, etc.
	-50	Aerodynamic Fairings	The structure of fixed or variable aerodynamic fairings such as those on the nose and tail and between the fuselage and the wing and the stabilizers. Includes items such as wing/fuselage fillets, nose and tail cones, radome, visor and droop nose, etc. Does not include the functioning and maintenance aspects of variable aerodynamic fairings which are covered in System 27.

SYS	SUB-SYS	TITLE	DEFINITION
54		NACELLES/ PYLONS	Those structural units and associated components/members which furnish a means of housing and mounting the power plant or rotor assembly. Includes skin, longerons, belt frames, stringers, clamshells, scuppers, doors, nacelle fillets, etc. Also includes the structure of power plant cowling.
	-00	General	
	-10	Main Frame	The primary skeleton of the nacelle or pylon. Includes items such as frames, bulkheads, firewalls, stringers, keel, frames around openings, etc.
	-20	Auxiliary Structure	The secondary structure in the nacelle/ pylons. Includes leading and trailing edge structure, etc. Does not include plates/ skin.
	-30	Plates/Skin	The exterior covering of the nacelle or pylon. Including access covers, cowling and doublers.
	-40	Attach Fittings	The fittings on the nacelles/pylons used for the attachment to its connecting structure, power plant, thrust reverser and for the support of equipment within the nacelle/ pylon.
	-50	Fillets/Fairings	The aerodynamic fairings between the nacelle or pylon and its connecting structure.

SYS	SUB-SYS	TITLE	DEFINITION
55		STABILIZERS	The horizontal and vertical stabilizers include the structure of the elevator and rudder.
	-00	General	
	-10	Horizontal Stabilizers	The horizontal airfoil of the tail/nose section to which the elevator/canard is attached. Includes items such as spars, ribs, stringers, plates/skin, access covers, tips, etc.
	-20	Elevator/Elevon	The removable airfoil which is used for longitudinal/longitudinal and lateral control. Includes items such as spars, ribs, stringers, plates/skin, access covers, tabs, balance devices, etc.
	-30	Vertical Stabilizers	The vertical airfoil to which the rudder is attached. Includes items such as spars, ribs, stringers, plates/skin, access covers, tips, etc.
	-40	Rudder	The removable airfoil which is attached t the vertical stabilizer and is used for yaw control. Includes items such as spars, ribs, stringers, plates/skin, access covers, tabs, balance devices, etc.
	-50	Attach Fittings	The fittings on the stabilizers used for the attachment of stabilizers, elevators, rudder tabs, fillets/fairings and for the support of equipment within the stabilizer.

SYS	SUB-SYS	TITLE	DEFINITION
56		WINDOWS	Those fuselage and crew compartment windows inclusive of windshield; also those windows installed in doors.
	-00	General	
	-10	Flight Compartment	The compartment above the floor and between the forward passenger partition and the forward pressure dome. Includes items such as the transparent material and its frame of sliding and fixed windows and windshields, handles, latching mechanisms, etc. Does not include door or inspection/observation windows.
	-20	Cabin	The area in which the passengers are seated. Includes lounges, lavatories, buffets/galleys and coatroom. Includes items such as transparent material, its frame, frost shield, etc.
	-30	Door	The doors used for entrance and exit of the passengers, flight crew and service personnel to and from the airplane. Includes items such as transparent material, its frame, etc. Does not include emergency exit windows.
	-40	Inspection and Observation	The windows used for examining compartments and equipment in and about the airplane, and astrodomes used for celestial navigation. Includes items such as transparent material, its frame, etc.

SYS	SUB-SYS	TITLE	DEFINITION
57		WINGS	Those center wing and outer wing structural units and associated components/members which enable the atmosphere to lift the aircraft, integral fuel tank structure and components that make up these units, such as spars, skin, ribs, stringers, clamshells, scuppers, etc. Includes the structure of the flaps, ailerons and spoilers.
	-00	General	
	-10	Main Frame	The primary skeleton of the wing. Includes spars, ribs, stringers, integral fuel tank structure, tip tank supporting structure and frames around openings.
	-20	Auxiliary Structure	The secondary structure of the wing. Includes leading edge, trailing edge, wing tip, tip fuel tank and fuel or water cell backing boards. Does not include plates/skin.
	-30	Plates/Skin	The exterior covering of the wing including access covers, doublers and tip tank fillets/fairings.
	-40	Attach Fittings	The fittings on the wing used for the attachment of fuselage, nacelle/pylon, and landing gear to the wing and for the support of equipment within the wing.
	-50	Flight Surfaces	The structure of removable airfoils attached to the wing. Includes items such as ailerons, flaps, spoilers, tabs, drag and balancing devices, etc.

SYS	SUB-SYS	TITLE	DEFINITION
58-60		Reserved	

SYS	SUB-SYS	TITLE	DEFINITION
61		PROPELLERS	The complete mechanical or electrical propeller, pumps, motors, governor, alternators, and those units and components external to or integral with the engine used to control the propeller blade angle. Includes propeller spinner, synchronizers, etc.
	-00	General	
	-10	Propeller Assembly	That portion of the system which rotates except the engine propeller shaft. Includes items such as blades, dome, hub, spinner, slip ring, de-icer boot, distributor valve, etc.
	-20	Controlling	That portion of the system which controls the pitch of the propeller blades. Includes items such as governor, synchronizers, switches, wiring, cables, levers, etc. Does not include any parts which rotate with the propeller assembly.
	-30	Braking	That portion of the system which is used to decrease run-down time or stop propeller rotation during engine power-off conditions. Includes brake mechanisms, levers, pulleys, cables, switches, wiring, plumbing, etc.
	-40	Indicating	That portion of the system used to indicate operation or activation of propeller systems. Includes items such as light, switches, wiring, etc.

SYS	SUB-SYS	TITLE	DEFINITION
62-64		Reserved	

SYS	SUB-SYS	TITLE	DEFINITION
65		ROTORS	The complete rotor system including transmission, rotor heads, rotor blades and accessory drives. Also includes rotor braking and blade angle and attitude control system but does not include the rotor anti-icing system which is covered in System 30, Ice and Rain Protection.
	-00	General	
	-10	Main Rotor	That portion of the system which rotates about a substantially vertical axis to provide lift and thrust or lift only. Includes items such as blades, heads, gear boxes, rain shields, transmissions, fairings, etc. Also includes the rotating portion of the ice and rain protection system.
	-20	Anti-Torque Rotor Assembly	That portion of the system which rotates in a plane substantially parallel to the plane of symmetry, to furnish a thrust which counteracts the torque of the main rotor and provides directional control. Includes items such as blades, hubs, shafts and couplings, gearboxes, transmissions, etc. Also includes the rotating portion of the ice and rain protection system.
	-30	Accessory Driving	That portion of the system which provides for mechanical power take-offs to drive accessories. Includes items such as gears and gear boxes, seals, pumps, etc.
	-40	Controlling	That portion of the system which controls the pitch and angle of attack of the rotor blades. Includes items such as governors, synchronizers, switches, wiring, cables, levers, etc. Does not include any parts which rotate with the rotor assembly.
	-50	Braking	That portion of the system which is used to decrease run-down time to stop rotor rotation during engine power-off conditions. Includes brake mechanisms, levers, pulleys, cables, switches, wiring, plumbing, etc.

SYS	SUB-SYS	TITLE	DEFINITION
65 (Cont'd)			
	-60	Indicating	That portion of the system used to indicate operation or activation of rotor systems. Includes items such as lights, gauges, switches, wiring, etc.

SYS	SUB-SYS	TITLE	DEFINITION
66-69		Reserved	

SYS	SUB-SYS	TITLE	DEFINITION
70		STANDARD PRACTICES - ENGINE	

SYS	SUB-SYS	TITLE	DEFINITION
71		POWER PLANT	The overall power package inclusive of engine, air intake, mount, cowling, scoops, cowl flaps.
	-00	General	This topic shall include general information, limits, and procedures. In the maintenance manual, this section shall cover subjects such as engine changes, run-up, externally-mounted spare power plants, etc. In the overhaul manual, this section shall cover subjects such as power plant build-up, teardown, etc.
	-10	Cowling	Those removable coverings which extend over and around the power plant assembly. Includes the functioning and maintenance aspects of items such as accessory section cowls, cowl flaps, cowling supports, attach and locking mechanisms, etc. Does not include the structure integral with the airframe which shall be covered in the applicable Structures System.
	-20	Mounts	The framework, either of build-up construction or forgings which support the engine and attach it to the nacelle or pylon. Includes items such as engine mounts, vibration dampeners, support links, mounting bolts, etc.
	-30	Fireseals	Those fire-resistant partitions and seals mounted on or about the power package for the purpose of isolating areas subject to fire. Does not include those fire-walls which are included in System 54.
	-40	Attach Fittings	Those fittings and brackets which are used for the support of equipment in and about the power package.

SYS	SUB-SYS	TITLE	DEFINITION
71 (Cont'd)			
	-50	Electrical Harness	Those electrical cables, conduits, plugs, sockets, etc., which serve several power plant systems, but which are banded together to facilitate removal and installation of the power plant. Does not include the wiring which is specifically covered under another system.
	-60	Air Intakes	That portion of the power plant system which directs and may or may not vary the mass air flow to the engine. Includes items such as nose ring cowls, scoops, compressor fan cowls, buried engine ducts, vortex generators, actuators, control handles, cables, wiring, plumbing, linkages, doors, warning systems, position indicators, etc. Does not include integral structure with the airframe, which shall be included in the applicable Structures System.
	-70	Engine Drains	Those components and manifold assemblies which are used to drain off excess fluids from the power plant and its accessories. Includes drainlines, manifolds, tanks, flame arrestors, vents and their supporting brackets, etc. Also includes components that are an integral part of, or fitted to the power plant cowling.

SYS	SUB-SYS	TITLE	DEFINITION
72		ENGINE	Those units and components which are:
			Used to induce and convert fuel-air mixture into power. Includes, for the turbine engine, air inlet, compressor, diffuser, combustion chambers, turbine and exhaust; and for the reciprocating engine, blower and clutch, clutch control valve, cylinders, cylinder baffles, intake pipes, crankshaft assembly, etc.
			Used to transmit power to the propeller shaft, if any, and accessory drives. Includes reduction gearing, gear trains, extension shaft and torque-meter.
			Within the profile of the basic engine, used to supplement the functioning of other defined systems external to the engine. Includes items such as accessory drive, mechanical portion of the spark advance mechanism, oil transfer tubes from the propeller governor pad to the propeller shaft, BMEP section, etc.
			Used to control and direct the flow of lubrication through the engine from the inlet fitting to the outlet fitting. Includes engine pumps (pressure and scavenger) pressure relief valves, screens, oil lines (internal and external), etc.
72		ENGINE TURBINE/ TURBO-PROP	
	-00	General	This topic is intended to cover general information, limits and procedures. In the engine overhaul manual, this section would include such subjects as teardown, cleaning, inspection, assembly, testing, etc.
	-10	Reduction Gear & Shaft Section (Turbo-Prop)	The section of the engine which contains the propeller shafts and reduction gears. Includes items such as drives for nose mounted accessories, etc.

SYS	SUB-SYS	TITLE	DEFINITION
72 (Cont'd)			
	-20	Air Inlet Section	The section of the engine through which the air enters the compressor section. Includes items such as guide vanes, shrouds, cases, etc.
	-30	Compressor Section	The section of the engine in which the air is compressed. Includes items such as cases, vanes, shrouds, rotors, diffusers, etc. Also includes the maintenance and overhaul of stator blades but not the operation of variable stator blades which is covered under System 75-30. Does not include compressor bleed system.
	-40	Combustion Section	The section of the engine in which the air and fuel are combined and burned. Includes items such as burner cans, cases, etc.
	-50	Turbine Section	The section of the engine containing the turbines. Includes items such as turbine nozzles, turbine rotors, cases, etc.
	-60	Accessory Drives	The mechanical power take-offs to drive accessories. Includes items such as engine-mounted gear boxes, gears, seals, pumps, etc. Does not include remotely installed gear boxes which are covered in System 83.
	-70	By-Pass Section	The section of the engine which by-passes a portion of the normal engine airflow (either ram or compressed air) for the prime purpose of adding to engine thrust or reducing specific fuel consumption.
72		ENGINE RECIPROCATING	
	-00	General	This topic is intended to cover general information, limits and procedures. In the engine overhaul manual, this section would include such subjects as teardown, cleaning, inspection, assembly, testing, etc.

SYS	SUB-SYS	TITLE	DEFINITION
72 (Cont'd)			
	-10	Front Section	The section of the engine which contains the propeller shafts and reduction gears. Includes items such as drives for nose mounted accessories, etc.
	-20	Power Section	The section of the engine which contains the crankshaft, master and link rod assemblies, cams, cam drive gears, tappet guides, rollers, carriers, etc.
	-30	Cylinder Section	The section of the engine which contains the cylinders, valves, pistons, push rods, intake pipes, baffles, etc. Also includes rocker arm assembly, valve springs, etc.
	-40	Supercharger Section	The section of the engine which contains cases, shroud plates, PRT coupling and gearing, impeller and drives, accessory drives, bushings, etc.
	-50	Lubrication	Those units and components which are used to distribute oil throughout the engine. Includes front and rear pressure and scavenger pumps, sumps, strainers, valves, etc. Also includes those oil lines not included in System 79. Does not include those items which form integral passages within the engine.

SYS	SUB-SYS	TITLE	DEFINITION
73		ENGINE FUEL AND CONTROL	For turbine engines, those units and components and associated mechanical systems or electrical circuits which furnish or control fuel to the engine beyond the main fuel quick disconnect; and thrust augmentor, fuel flow rate sensing, transmitting and/or indicating units whether the units are before or beyond the quick disconnect. Includes: Coordinator or equivalent, engine driven fuel pump and filter assembly, main and thrust augmentor fuel controls, electronic temperature datum control, temperature datum valve, fuel manifold, fuel nozzles, fuel enrichment system, speed sensitive switch, relay box assembly, solenoid drip valve, burner drain valve, etc. For reciprocating engines, those units and components which deliver metered fuel and air to the engine. The fuel portion includes the carburetor/master control from the inlet side to the discharge nozzle(s), injection pumps, carburetor, injection nozzles and fuel primer. The air portion includes units from the scoop inlet to the vapor vent return, and the impeller chamber.
	-00	General	
	-10	Distribution	That portion of the system from the main quick disconnect to the engine, which distributes fuel to the engine burner section and the thrust augmentor. Includes items such as plunging, pumps, temperature regulators, valves, filters, manifold, nozzles, etc. Does not include the main or thrust augmentor fuel control.
	-20	Controlling	The main fuel controls which meter fuel to the engine and to the thrust augmentor. Includes items such as levers, cables, pulleys, linkages, etc., which are components of the fuel control units.

SYS	SUB-SYS	TITLE	DEFINITION
73 (Cont'd)			
	-30	Indicating	That portion of the system which is used to indicate the flow rate, temperature and pressure of the fuel. Includes items such as transmitters, indicators, wiring, etc.

SYS	SUB-SYS	TITLE	DEFINITION
74		IGNITION	Those units and components which generate, control, furnish, or distribute an electrical current to ignite the fuel air mixture in the cylinders of reciprocating engines or in the combustion chambers or thrust augmentors of turbine engines. Includes induction vibrators, magnetos, switches, lead filters, distributors, harnesses, plugs, ignition relays, excitors, and the electrical portion of spark advance.
	-00	General	
	-10	Electrical Power Supply	That portion of the system which generates electrical current for the purpose of igniting the fuel mixture in the combustion chambers and thrust augmentors. Includes items such as magnetos, distributors, booster coils, exciters, transformers, storage capacitors and compositors, etc.
	-20	Distribution	That portion of the system which conducts high or low voltage electricity from the electrical power supply to the spark plugs, or igniters. Includes wiring between magneto and distributor in those sytems where they are separate units. Includes items such as ignition harness, high tension leads, coils as used in "low tension" systems, spark plugs, igniters, etc.
	-30	Switching	That portion of the system which provides a means of rendering the electricl power supply inoperative. Includes items such as ignition switches, wiring, connectors, etc.

SYS	SUB-SYS	TITLE	DEFINITION
75		AIR	For turbine engines, those external units and components and integral basic engine parts which go together to conduct air to various portions of the engine and to the extension shaft and torque-meter, assembly, if any. Includes compressor bleed systems used to control flow of air through the engine, cooling air systems and heated air systems for engine anti-icing. Does not include aircraft anti-icing, engine starting systems, nor exhaust supplementary air systems.
	-00	General	
	-10	Engine Anti-Icing	That portion of the system which is used to eliminate and prevent the formation of ice by bleed air in all parts of the engine, excluding power plant cowling which is covered under System 30. Includes items such as valves, plumbing, wiring, regulators, etc. Electrical anti-icing is covered in System 30.
	-20	Accessory Cooling	That portion of the system which is used to control the flow of air through the engine. Includes items such as governors, valves, actuators, linkages, etc. Also includes the operation of variable stator blades, but not the maintenance and overhaul, which shall be covered under 72-30.
	-40	Indicating	That portion of the system which is used to indicate temperature, pressure, control positions, etc., of the air systems. Includes items such as transmitters, indicators, wiring, etc.

SYS	SUB-SYS	TITLE	DEFINITION
76		ENGINE CONTROLS	Those controls which govern operation of the engine. Includes units and components which are interconnected for emergency shutdown. For turbo-prop engines, includes linkages and controls to the coordinator or equivalent and from the coordinator or equivalent to the propeller governor, fuel control unit or other units being controlled. For reciprocating engines, includes controls for blowers. Does not include units or components which are specifically included in other systems.
	-00	General	
	-10	Power Control	That portion of the system which furnishes a means of controlling the main fuel control or coordinator. Includes controls to the propeller regulator on turbo-prop engines. Includes items such as linkages, cables, levers, pulleys, switches, wiring, etc. Does not include the units themselves.
	-20	Emergency Shutdown	That portion of the system which furnishes a means of controlling the flow of fluids to and from the engine during emergency procedures. Includes items such as levers, cables, pulleys, linkages, switches, wiring, etc. Does not include the units themselves.

SYS	SUB-SYS	TITLE	DEFINITION
77		ENGINE INDICATING	Those units, components and associated systems which indicate engine operation. Includes indicators, transmitters, analyzers, etc. For turbo-prop engines, includes phase detectors. Does not include systems or items which are specifically included in other systems.
	-00	General	
	-10	Power	That portion of the system which directly or indirectly indicates power or thrust. Includes items such as BMEP, pressure-ratio, RPM, etc.
	-20	Temperature	That portion of the system which indicates temperatures in the engine. Includes items such as cylinder head, exhaust (turbine inlet), etc.
	-30	Analyzers	That portion of the system which is used to analyze engine performance or condition by means of instruments or devices such as oscilloscopes, etc. Includes items such as generators, wiring, amplifiers, oscilloscopes, etc.

SYS	SUB-SYS	TITLE	DEFINITION
78		EXHAUST	Those units and components which direct the engine exhaust gases overboard. For turbine engines, includes units external to the basic engine such as thrust reverser and noise suppressor. For reciprocating engines, includes augmentors, stacks, clamps, etc. Excludes exhaust-driven turbines.
	-00	General	
	-10	Collector/ Nozzle	That portion of the system which collects the exhaust gases from the cylinders or turbines and conducts them overboard. Includes items such as collector rings, exhaust and thrust augmentor ducts, variable nozzles, actuators, warning systems, etc. Does not include power recovery turbines, turbo-superchargers, etc., no noise suppressors or thrust reversers where they are not an integral part of the nozzle system.
	-20	Noise Suppressor	That portion of the system which reduces the noise generated by the exhaust gases. Includes items such as pipes, baffles, shields, actuators, plumbing linkages, wiring, position indicators, warning systems, etc. Use -10 where integral part of nozzle system.
	-40	Supplementary Air	That portion of the system which varies and controls supplementary air flow to the exhaust system. Includes items such as tertiary air doors, actuators, linkages, springs, plumbing, wiring, position indicators, warning systems, etc.

SYS	SUB-SYS	TITLE	DEFINITION
79		OIL	Those units and components external to the engine concerned with storing and delivering lubricating oil to and from the engine. Covers all units and components from the libricating oil engine outlet to the inlet, including the inlet and outlet fittings, tank radiator, by-pass valve, etc., and auxiliary oil systems.
	-00	General	
	-10	Storage	That portion of the system used for storage of oil Includes items such as tanks, filling systems, internal hoppers, baffles, tank sump and drain, etc. Does not include tanks which are an integral portion of the engine.
	-20	Distribution	That portion of the system which is used to conduct oil from and to the engine. Includes items such as plumbing, valves, temperature regulator, control systems, etc.
	-30	Indicating	That portion of the system which is used to indicate the quantity, temperature and pressure of the oil. Includes items such as transmitters, indicators, wiring, warning systems, etc.

SYS	SUB-SYS	TITLE	DEFINITION
80		STARTING	Those units, components and associated systems used for starting the engine. Includes electrical, inertia air or other starter systems. Does not include ignition systems which are covered in System 74, Ignition.
	-00	General	
	-10	Cranking	That portion of the system which is used to perform the cranking portion of the starting operation. Includes items such as plumbing, valves, wiring, starter, switches, relays, etc.

SYS	SUB-SYS	TITLE	DEFINITION
81		TURBINES	For reciprocating engines only. Includes power recovery turbine assembly and turbo-supercharger unit when external to the engine.
	-00	General	
	-10	Power Recovery	The turbines which extract energy from the exhaust gases and are coupled to the crank-shaft.
	-20	Turbo-Supercharger	The turbines which extract energy from the exhaust gases and drive an air compressor.

SYS	SUB-SYS	TITLE	DEFINITION
82		WATER INJECTION	Those units and components which furnish, meter and inject water or water mixtures into the induction system, includes tanks, pumps, regulators, etc.
	-00	General	
	-10	Storage	That portion of the system which is used for the storage of water or water mixtures. Includes tank sealing, attachment of bladder type cells, ventilating system, cell and tank interconnectors, filling systems, etc.
	-20	Distribution	That portion of the system which is used to conduct water or water mixtures from the tanks or cells to the engine. Includes items such as plumbing, crossfeed system, pumps, valves, controls, etc.
	-30	Dumping and Purging	That portion of the system which is used to dump injection water and to purge the system. Includes items such as plumbing, valves, controls, etc.
	-40	Indicating	That portion of the system which is used to indicate the quantity, temperature and pressure of the water or water mixtures. Includes items such as transmitters, indicators, wiring, etc.

SYS	SUB-SYS	TITLE	DEFINITION
83		ACCESSORY GEAR BOXES	Those units and components which are remotely installed and connected to the engine by a drive shaft and which drive multiple types of accessories. Does not include those accessory drives which are bolted to and are immediately adjacent to the engine. The latter item shall be covered under System 72, Engine.
	-00	General	
	-10	Drive Shaft Section	That portion of the system which is used to conduct power from the engine to the gearbox. Includes items such as drive shaft, adapters, seals, etc.
	-20	Gearbox Section	The case which contains the gear trains and shafts. Includes items such as gears, shafts, seals, oil pumps, coolers, etc.

SYS	SUB-SYS	TITLE	DEFINITION
84		TAKE OFF ASSIST	Those units and components which furnish a means of providing and auxiliary source of thrust for take off.
	-00	General	
	-10	Jato System	That portion of the system containing controls, mounting provisions, indicators, and Jato units.

SYS	SUB-SYS	TITLE	DEFINITION
85-90		Reserved	

SYS	SUB-SYS	TITLE	DEFINITION
91		WIRE HARNESS LOCATION	Those diagrams which show the general Sys/ Sub-Sys wire harness locations within the weapon system.

SYS	SUB-SYS	TITLE	DEFINITION
92		ELECTRICAL POWER MULTIPLEXING	Those units and components which provide for multiplexing of electrical power.
	-00	General	

SYS	SUB-SYS	TITLE	DEFINITION
93		ELECTRONIC WARFARE	Those units and components which furnish a means of detecting, jamming, or nullifying the effectiveness of defensive detection devices.
	-00	General	
	-10	Active	That portion of the system consisting of receivers, transmitters, repeaters, blanking and modulating devices, etc.
	-30	Passive	That portion of the system that contains no active elements. For example: chaff.
	-50	Elint	That portion of the system consisting of electronic intelligence systems such as receivers, monitors, recorders and analysis devices.

SYS	SUB-SYS	TITLE	DEFINITION
94		WEAPON SYSTEM	Those units and components which furnish a means of acquiring a target and releasing stores.
	-10	Weapons Release	The weapon release system consists of all equipment required to release, fire and/or jettison stores. Includes computers, displays, controls, stores management, etc.
	-30	Weapons	The weapons suspension system provides interconnecting equipment to transport and release/fire weapons. Includes pylons, ejection racks, launchers, etc.
	-50	Gunnery	The gunnery system consists of all guns and equipment necessary to fire stores.
	-70	Weapons Control	Those units and components which furnish a means of designating and acquiring a target, includes radar, computers, displays, etc., necessary to provide weapon release decision (aiming cues).

SYS	SUB-SYS	TITLE	DEFINITION
95		CREW ESCAPE AND SAFETY	Those units and components which furnish a means of ejecting or jettisoning personnel, capsules or equipment from the airframe.
	-00	General	
	-10	Ejection Seats	That portion of the system which is used to eject flight crew or passenger seats individually from the airframe.
	-20	Escape Hatches	That portion of the escape systems involving frangible hatches, jettisonable hatches or actuating hatches.
	-30	Capsule Ejection	That portion of the escape system that provides a protective environment to the flight crew after separation from the airframe.
	-50	Global Survival Kits	That portion of the system that insures flight crew survivability and/or after unplanned separation landing.
	-60	Impact Protection and Flotation	That portion of the system providing protection to personnel/equipment after impact.
	-70	Capsule Flight	That portion of the system used to control attitude and direction of the capsule or container after ejecting or jettisoning from the airframe.

SYS	SUB-SYS	TITLE	DEFINITION
96		MISSILES, DRONES AND TELEMETRY	Those units and components which furnish a means of launching and controlling drones and ground launched missiles.
	-00	General	
	-10	Surface to Surface Missiles	That portion of the system which is used for launching and controlling surface to surface missiles.
	-20	Surface to Air Missiles	That portion of the system which is used for launching and controlling surface to air missiles.
	-30	Drones	That portion of the system which is used for launching and controlling drones.
	-40	Telemetry	That portion of the system which is used for telemetry, for applications other than missile, drone or decoy usage.

SYS	SUB-SYS	TITLE	DEFINITION
97		PHOTOGRAPHIC	Those units and components which furnish a means of recording by film instruments, or objects.
	-00	General	
	-10	Strike Camera	That portion of the system which is used for recording the results of an air strike.
	-20	Bomb-Nav System Camera	That portion of the system which is used for recording instruments and the dropping of bombs.
	-30	Fire Control Camera System	That portion of the system which is used for recording rockets and gunfire.
	-40	Instrumentation Camera System	That portion of the system which is used for recording meters, dials, CRT displays, etc.
	-50	Range Camera System	That portion of the system which is used for range cameras. Includes installation such as forward and oblique camera systems.

SYS	SUB-SYS	TITLE	DEFINITION
98		METEOROLOGICAL & ATMOSPHERIC RESEARCH	Those units and components which furnish a means of providing and recording measurement of natural or man-made atmospheric phenomena, gravitation and magnetic.
	-00	General	
	-10	Weather	That portion of the system which is used to measure and record moisture, temperature, cloudiness, wind, etc.
	-20	Clear Air Turbulence	That portion of the system which is used to detect, measure, and record clear air turbulence.
	-30	Pollutants	That portion of the system which is used to detect, measure and record contaminated particles.
	-40	Magnetic/ Gravitational	That portion of the system which is used to detect, measure and record the earth's magnetic and gravitational force.

SYS	SUB-SYS	TITLE	DEFINITION
99		SURVEILLANCE	Those units and components which furnish a means of sensing the surrounding environment and then process display and record the resulting information.
	-00	General	
	-10	Data Processing	That portion of the system that provides computation, switching, and storage of signals acquired.
	-20	Data Display	That portion of the system that provides the data display of information acquired by sensors.
	-30	Recording	That portion of the system that provides recording of information acquired by sensors.
	-40	Identification	That portion of the system that provides identification of information acquired by sensors.
	-50	Infra-Red Sensors	That portion of the system that used heat sensing devices such as infra-red scanners, infra-red image and detectors to acquire information.
	-60	Laser Sensors	That portion of the system that uses laser for distance measuring.
	-70	Surveillance Radar	That portion of the system that uses radar for surveillance or mapping purposes. This includes devices such as antennas, receivers, transmitters, indicators, etc.
	-80	Magnetic Sensors	That portion of the system that senses magnetic anomolies. This includes devices such as magnetometers, amplifiers, computers, indicators, etc.
	-90	Sonal Sensors	That portion of the system that senses objects under water. This includes devices such as modulators, computers, transducers, indicators, etc.

INSTRUCTIONS: In a continuing effort to make our standardization documents better, the DoD provides this form for use in submitting comments and suggestions for improvements. All users of military standardization documents are invited to provide suggestions. This form may be detached, folded along the lines indicated, taped along the loose edge *(DO NOT STAPLE)*, and mailed. In block 5, be as specific as possible about particular problem areas such as wording which required interpretation, was too rigid, restrictive, loose, ambiguous, or was incompatible, and give proposed wording changes which would alleviate the problems. Enter in block 6 any remarks not related to a specific paragraph of the document. If block 7 is filled out, an acknowledgement will be mailed to you within 30 days to let you know that your comments were received and are being considered.

NOTE: This form may not be used to request copies of documents, nor to request waivers, deviations, or clarification of specification requirements on current contracts. Comments submitted on this form do not constitute or imply authorization to waive any portion of the referenced document*(s)* or to amend contractual requirements.

(Fold along this line)

(Fold along this line)

DEPARTMENT OF THE AIR FORCE

NO POSTAGE NECESSARY IF MAILED IN THE UNITED STATES

OFFICIAL BUSINESS
PENALTY FOR PRIVATE USE $300

BUSINESS REPLY MAIL
FIRST CLASS PERMIT NO. 73236 WASHINGTON D. C.

POSTAGE WILL BE PAID BY THE DEPARTMENT OF THE AIR FORCE

HQ AFLC CASO/LODS
Federal Center
Battle Creek, MI 49016

STANDARDIZATION DOCUMENT IMPROVEMENT PROPOSAL

(See Instructions – Reverse Side)

1. DOCUMENT NUMBER

2. DOCUMENT TITLE

3a. NAME OF SUBMITTING ORGANIZATION

4. TYPE OF ORGANIZATION *(Mark one)*

- ☐ VENDOR
- ☐ USER
- ☐ MANUFACTURER
- ☐ OTHER *(Specify)* _____

b. ADDRESS *(Street, City, State, ZIP Code)*

5. PROBLEM AREAS

a. Paragraph Number and Wording:

b. Recommended Wording:

c. Reason/Rationale for Recommendation:

6. REMARKS

7a. NAME OF SUBMITTER *(Last, First, MI)* – Optional

b. WORK TELEPHONE NUMBER *(Include Area Code)* – Optional

c. MAILING ADDRESS *(Street, City, State, ZIP Code)* – Optional

8. DATE OF SUBMISSION *(YYMMDD)*

DD FORM 1426, 82 MAR

PREVIOUS EDITION IS OBSOLETE