Downloaded from http://www.everyspec.com

METRIC
DOD-G-24508A(NAVY)
AMENDMENT 4
23 September 1998
SUPERSEDING
AMENDMENT 3
12 March 1987

MILITARY SPECIFICATION

GREASE, HIGH PERFORMANCE, MULTIPURPOSE (METRIC)

This amendment forms a part of DOD-G-24508A(NAVY), dated 6 May 1977, and is approved for use within the Naval Sea Systems Command, Department of the Navy and is available for use by all Departments and Agencies of the Department of Defense.

PAGE 1

2.1.2: Add as new paragraph:

"2.1.2 Other Government document. The following other Government document forms a part of this document to the extent specified herein. Unless otherwise specified, the issue shall be the one in effect on the date of the solicitation.

DEPARTMENT OF LABOR
Code of Federal Regulations, Title 29, Part 1910,
Section 1200 - Hazard Communications Standard.

(Application for copies should be addressed to the Superintendent of Documents, Government Printing Office, Washington, DC 20402.)

At bottom of page: Delete and substitute beneficial comments statement. "Beneficial comments (recommendations, additions, deletions) and any pertinent data which may be of use in improving this document should be addressed to: Commander, Naval Sea Systems Command, SEA 03R42, 2531 Jefferson Davis Hwy., Arlington, VA 22242-5160 by using the Standardization Document Improvement Proposal (DD Form 1426) appearing at the end of this document or by letter."

PAGE 2

3.1, line 1: Delete "Grease" and substitute "The grease".

3.2: Add as last sentence: "This grease shall be of such material as to not require additional container labeling in accordance with CFR, Title 29, Part 1910, Section 1200."

DISTRIBUTION STATEMENT A. Approved for public release; distribution is unlimited.

Downloaded from http://www.everyspec.com

* 3.2.1: Add as new paragraph:

"3.2.1 Toxic chemicals, hazardous substances, and ozone depleting substances (ODSs). The multipurpose grease shall have no adverse effect on the health of personnel when used for its intended purpose. The as to be an annoyance to personnel during its intended use. The use of any toxic chemical, hazardous material or ozone depleting chemical shall be avoided. To the greatest extent possible, requirements for replacement chemicals shall be stated in terms of performance rather than specifying any chemical or substance and shall comply with local, state and federal regulations (see 6.2 and 6.9).

* 3.2.1.1 Off-gas. The material shall be usable onboard ship or submarine. Materials considered for submarine use shall be approved in accordance with the requirements of 4.7.

* 3.2.2: Delete in its entirety.

PAGE 3

3.14: Delete and substitute:

"3.14 Load wear index. The load wear index of the grease shall be not less than 30 kilograms when tested as specified in 4.5.1."

3.19 Delete and substitute:

"3.19 Performance life. The grease shall lubricate a size 315 radial ball bearing satisfactorily at 149°C (300°F) when tested as specified in 4.5.2.1 and compared with Navy Reference Grease Z-1.

3.20: Delete and substitute:

"3.20 Bearing temperature life rise and grease leakage. The grease, when tested as specified in 4.5.2.2, shall not show a maximum test bearing temperature rise greater then 56°C (100°F) nor a steady-state bearing temperature rise greater than 14°C (25°F) average and no single steady-state temperature rise greater than 17°C (30°F), nor grease leakage greater than 0.1 gram."

3.25.1, line 1: Delete "4.5.1" and substitute "4.5.4."

3.25.2, line 1: Delete "4.5.4" and substitute "4.5.1".

PAGE 5

Table I, under "TEST" column: Delete "oxidation and tester" and substitute "oxidation tester".

PAGES 5, 6 and 7

4.5.2.1.1 through 4.5.2.1.4.1.4: Delete and substitute the following:

"4.5.2.1.1 Apparatus. The apparatus shall be as shown on figure 1 and shall consist of the following:

Downloaded from http://www.everyspec.com

(a) Test spindle supported in a cast iron housing by two auxiliary bearings.
(b) A 1 hp motor drives the test spindle by means of a flat 2 inch wide belt to give the spindle a speed of 3600 ± 50 revolutions per minute (r/min).
(c) Electrically heated oven with a temperature controller capable of maintaining the temperature of the test bearing within plus or minus 1.7°C (plus or minus 3°F) of the chosen temperature. The oven shall have two separate heaters. One heater operates continuosly; it is connected to a manually set variable voltage transformer for providing any voltage from 0 to 100 percent of line voltage to this heater. The second heater is connected in series with the temperature controller thus giving intermittent heating with this heater.
(d) Test bearing; single row, radial, deep grove, single shielded, with pressed steel retainer, size 315, NT3, in accordance with MIL-B-17931, heat stabilized to 149°C (300°F), enclosed in a housing and mounted on a vertical test spindle. A radial load of 685.0 newtons (N) (1540 pounds) is applied to the bearing by a spring mounted outside the oven. Details of the bearing housing and its cover shall be as shown on figures 2a and 2b.
(e) Temperature controller (for heater actuation) maintaining a plus or minus 1.7°C (3°F) of set temperature.
(f) Temperature recorder; to record outer race temperature of test bearing in each test unit.
(g) Grease gun, hand held, screw type with an applicator tube having a 3/32 inch minimum inside diameter.
(h) Ultrasonic cleaner with heater for cleaning test bearing.
(i) Balance, top loading, 4000 gram capacity, plus or minus 0.05 gram accuracy.

* "4.5.2.1.2 Cleaning material. Delete and substitute:

"4.5.2.1.2 Cleaning material. Electron Solvent (NSN 6850-01-375-5553 [6-gallon pail], NSN 6850-01-375-5554 [1-gallon can]) or equivalent aliphatic hydrocarbon terpene mixture."

4.5.2.1.3 Preparation. For pregreased test bearings, remove grease from bearing using narrow blade nonmetallic spatula. All test bearings are then cleaned as follows. The test bearing is placed in an ultrasonic cleaner and covered with electron solvent. The solvent shall be used at room temperature, since heating the solvent may cause the terpene to become unstable. Manually remove stubborn deposits or clumps of grease with a clean brush having short, soft bristles. The bearing is inspected periodically. When the visible face of the bearing is clean rotate bearing slightly. Dip the bearing in a container filled with clean solvent and then place the bearing on a clean dry surface until the residual solvent has evaporated. The bearing is weighed. Grease is injected to the bearing using the grease gun until 31 ± 0.1 grams of grease having a specific gravity of 0.9 are uniformily distributed throughout the bearing. Grease packs for greases with specific gravity other than 0.9 is as follows:

$$\text{Grease pack (gram)} = \frac{31 \times (\text{specific gravity of grease})}{0.9}$$

Grease shall not extend beyond the face of the races. The bearing shield shall then be installed in the bearing.

Downloaded from http://www.everyspec.com

"4.5.2.1.4 The bearing shall be placed in the housing and then installed on test spindle so that the bearing shield will be in the down position (see figure 1). Thermocouple wires shall be inserted in the threaded holes provided in the housings so that they are in contact with the bearing outer-ring. The radial load shall then be applied.

"4.5.2.1.5 Procedure. The driving motor shall be started and the bearing operated for 24 hours without heat. Maximum temperature rise over ambient, and temperature rise over ambient at the end of 24 hours shall be noted. Heat shall then be applied to bring the bearing to the specified temperature of 149 ± 3°C (300 ± 5°F) within 1-1/2 hours. The oven heat shall be provided principally by the variable voltage heater with the temperature controller heater acting as a trimming device to maintain the desired test bearing temperature. After 2 hours adjusted so that the heater connected to the temperature controller operates on a cycle of approximately 10 to 25 percent "on" time and 75 to 90 percent "off" time. Thereafter no changes in heater control settings shall be made except for minor adjustments for ambient, voltage changes, and so forth. Test operation shall be cyclic with 6 days (144 hours) running followed by one day (24 hours) shut-down. This operating cycle shall be continued until lubrication failure occurs. During each shut-down, the outside of the bearing housing and oven shall be inspected for grease leakage. Lubrication failure shall be considered to have occurred when any of the following conditions prevail:

(a) Tripping of motor thermal cut-out switch indicating that frictional torque has increased sufficiently to over-load the motor.
(b) Locking of test bearing or belt slippage (when belt tension is not a factor) on restart or during test run.
(c) Excessive leakage. Leakage is excessive if grease or separated oil is slung from the bearing or housing.
(d) Temperature excursion in excess of 176.7°C (350°F) for more than 24 hours.
(e) Audible abnormal noise (such as squealing) or vibration while running or perceptible roughness when turning the test bearing by hand.

Once any of these conditions are met, the tester is secured and total running time is recorded. The test shall be conducted on six test bearings. A Weibull plot of the results shall be used to determine the median (50 percent) life. The grease shall be reported as passing if the median life equals or exceeds that obtained in a like test using Navy Reference Grease Z-1. Information on Navy Reference Grease Z-1 shall be no more than 6 months old, otherwise it is to be run at the same time as the candidate grease."

PAGES 6 and 7

Delete footnotes 1, 2 and 3.

PAGES 7 and 8

4.5.2.2 through 4.5.2.2.4.2: Delete and substitute:

"4.5.2.2 Bearing temperature rise and grease leakage test.

"4.5.2.2.1 Apparatus.

Downloaded from http://www.everyspec.com

(a) Vertical shaft single test bearing unit with hydraulic loading cylinder for applying a 410 kg (900 pound) thrust load as shown on figure 3. Details of the test bearing spindle and housing are shown on figures 2a and 2b.
(b) Test bearing: single row, radial, deep groove, single shield with pressed steel retainer, size 315, grade NT3 conforming to MIL-B-17931. A second separable shield or shield manufactured locally shall be used with each bearing to simulate a double shield bearing configuration in the test. This is attached to the bearing housing above the test bearing (see figure 3). The test bearing shall have a thermocouple located so as to contact the bearing outer diameter at mid-width.
(c) Motor for driving test spindle, 2.2 kW (3 hp), 3550 ± 50 r/min rated speed. The motor circuit shall incorporate a motor over load breaker which will secure the test when frictional torque has increased sufficiently to overload the motor.
(d) Removable enclosure around test stand with: (1) heaters mounted below the level of the test bearing maintaining 35 ± 3°C (95 ± 5°F); (2) two fans, one mounted through the wall of the enclosure to vent heat and one mounted inside the enclosure to circulate the air within the enclosure for uniform temperature distribution. The heater and vent fan are wired to a temperature controller so that the heater will operate at temperatures below 35°C (95°F) and the fan will vent excess heat at temperatures above 35°C (95°F).
(e) Temperature recorder; to record outer race temperature of the test bearing and ambient (enclosure) temperature.
(f) Hydraulic power source which with the hydraulic cylinder shown on figure 3 will produce a thrust load of 410 kg (900 pounds) on the test spindle.
(g) A locally improvised transparent plastic collector basin (with a center hole sufficient to clear the rotating shaft and sides sufficiently high to touch the underside of the mounting plate) shall be supported so as to collect any grease dropping down or thrown outward from the bearing and rotating shaft lower portion.
(h) Grease gun, hand held, screw type with an applicator tube having a 3/32 inch minimum inside diameter.
(i) Ultrasonic cleaner with heater for cleaning test bearing.
(j) Balance, top loading, 4000 gram capacity, plus or minus 0.05 gram accuracy.

"4.5.2.2.2 Cleaning materials. Electron solvent, (NSN 6850-01-375-5553 [6 gallon pail], NSN 6850-01-37-5554 [1 gallon can]) or equivalent aliphatic hydrocarbon terpene mixture."

"4.5.2.2.3 Preparation. For greased test bearings, remove grease from bearing using narrow blade spatula. All test bearings are then cleaned as follows: The test bearing is placed in an ultrasonic cleaner and covered with electron solvent. The solvent shall be used at room temperature since heating may cause the terpene to decompose. Manually remove stubborn deposits or clumps of grease with a clean brush having short soft bristles. The bearing is placed in the ultrasonic cleaner and covered with solvent. The bearing is inspected occasionally. When thoroughly clean the bearing is removed from the ultrasonic cleaner while it is operating. Dip the bearing in a container filled with clean solvent and then place the bearing on a clean dry surface

Downloaded from http://www.everyspec.com

until the residual solvent has evaporated. The bearing is weighted. Grease is injected into the bearing using the grease gun until 47 ± 0.1 grams of grease are uniformly distributed throughout the bearing, based on grease with a specific gravity of 0.9. Grease with different specific gravities, calculate the grease pack using the following:

$$\text{Grease pack (grams)} = \frac{47 \times (\text{specific gravity of grease})}{0.9}$$

Grease shall not extend beyond the face of the races. The bearing shield shall then be installed in the bearing outer race. The bearings shall be installed on the test spindle so the single shield which was in the bearing as supplied is in the down most position in operation.

"4.5.2.2.4 Procedure. The temperature controller for ambient temperature control is turned on. When the ambient (enclosure) temperature reaches 35°C (95°F) as indicated by the temperature recorder, the circulating fan is turned on. Twenty to 24 hours is allowed for the tester to come to equilibrium temperature. A test load of 410 kg (900 pounds) shall be applied by the load piston and the unit is started. The temperature inside the enclosure is to be maintained at 35 ± 3°C (95 ± 5°F) throughout the test. The test is operated continuously for 20 hours. At the end of the required time, the unit is secured. Appearance of any grease deposited in the plastic collector basin is visually noted with respect to oil separation or change in grease consistency and recorded. Any grease leakage (and oil, if separation occurred) is wiped from the shaft and form the interior of the plastic collector basin and weighed. Sufficient disassembly of the apparatus shall be made so grease adhering to exterior test bearing surfaces and adjacent tester areas above and below the upper and lower shields can be collected and weighed.

"4.5.2.2.4.1 Three test runs shall be made on each candidate grease.

"4.5.2.2.4.2 Criteria for evaluating the temperature rise and grease leakage performance of the candidate grease shall be as follows:

(a) The maximum test bearing temperature rise, T(MAX) - T (AMBIENT), shall not exceed 56°C (100°F).
(b) The mean of the test bearing temperature rise at 20 hours T(20-hours) - T(AMBIENT), for the three tests shall not exceed 14°C (25°F) with no single value greater than 17°C (30°F).
(c) The grease leakage from the test bearing shall not exceed 0.1 gram for any of the three tests. There shall be no grease droppage or slinging into the plastic collecting basin and no indication of oil separation in any test run; any grease leakage from the test bearing shall adhere to the top and bottom bearing shields and bearing and housing areas immediately adjacent to the test bearing."

PAGE 8

Delete footnote 4.

Downloaded from http://www.everyspec.com

PAGE 10

* 4.7: Add as new paragraph:

"4.7 Off gassing test. This testing is conducted to evaluate the tendency for off gassing and release of objectionable chemicals into the interior of submarines. The lubricant must be approved in accordance with the Submarine Materials Control Program (see 6.8).

* 6.2, Add:

"(d) Is material safety data sheet required? (see 6.12).
(e) Is NEHC toxicity evaluation required ? (see 6.9)."

PAGE 11

6.5, line 1: Delete "Department" and substitute "Laboratory".

* 6.8, Add as new:

"6.8 Off gas testing. The off gas test is required to be conducted in a Government laboratory arranged by the preparing activity. Formulation changes, either in the base stock of the additive package shall require a reevaluation for off gas testing. Information pertaining to this test requirement may be obtained from the Naval Sea Systems Command, SEA 03R42, 2531 Jefferson Davis Hwy., Arlington, VA 22242-5160.

* 6.9, Add as new:

"6.9 Toxicity evaluation. Questions concerning toxicity and requests for Health Hazard Risk Assessments (HHRA) should be addressed to Commanding Officer, Navy Environmental Health Center, 2150 Walmer Avenue, Norfolk, VA 23513-2617, Attention: C.I.H./NEHC-34. NEHC requires sufficient information to permit a toxicological evaluation of the product. As a minimum, the information shall include approximate percentages by weight of each ingredient in the product, identification of its pyrolysis products; and any other information as may be needed to permit an accurate appraisal of toxicity problem associated with the handling, storage, application, use, removal, disposal or combustion of the product (the whole bag with desiccant). Formulation changes, either in the base stock or the additive package shall require a reevaluation for toxicity. Upon receipt of the HHRA performed by NEHC, a copy should be provided to Commander, Naval Sea Systems Command, Code 03M, 2531 Jefferson Davis Hwy., Arlington, VA 22242-5160.

6.10, Add as new:

"6.10 Applicants for qualification may obtain samples of reference grease Z-1 by applying to the Commander, Naval Sea Systems Command, Materials and Assurance Engineering Office, 2531 Jefferson Davis Hwy., Arlington, VA 22242-5160."

6.11, Add as new:

"6.11 Test machinery described on figures 2a and 2b are only available in inch pound units."

Downloaded from http://www.everyspec.com

6.12, Add as new:

"6.12 Material safety data sheets. Contracting officers will identify those activities requiring copies of completed Material safety data sheets (MSDS) prepared in accordance with FED-STD-313. The pertinent Government mailing addresses for submission of data are linted in appendix B of FED-STD-313. In order to obtain the MSDS, FAR clause 52.223-3 must be in the contract."

PAGES 12, 13, 14, and 15

Figures 1a, 1b, 2a, 2b, and 3: Delete and substitute attached new figures 1, 2a, 2b, and 3.

LAST PAGE

DD 1426, Standardization Document Improvement Proposal: Delete and substitute address:

"COMMANDER
NAVAL SEA SYSTEMS COMMAND
SEA 03R42
2531 JEFFERSON DAVIS HWY.
ARLINGTON, VA 22242-5160"

NOTE: The margins of this amendment are marked with an asterisk to indicate where changes from the previous amendment were made. This was done as a convenience only and the Government assumes no liability whatsoever for any inaccuracies in these notations. Bidders and contractors are cautioned to evaluate the requirements of this document based on the entire content irrespective of the marginal notations and relationship to the last previous amendment.

Review activity:
Navy - AS

Preparing activity:
Navy - SH
(Project 9150-N824)

Downloaded from http://www.everyspec.com

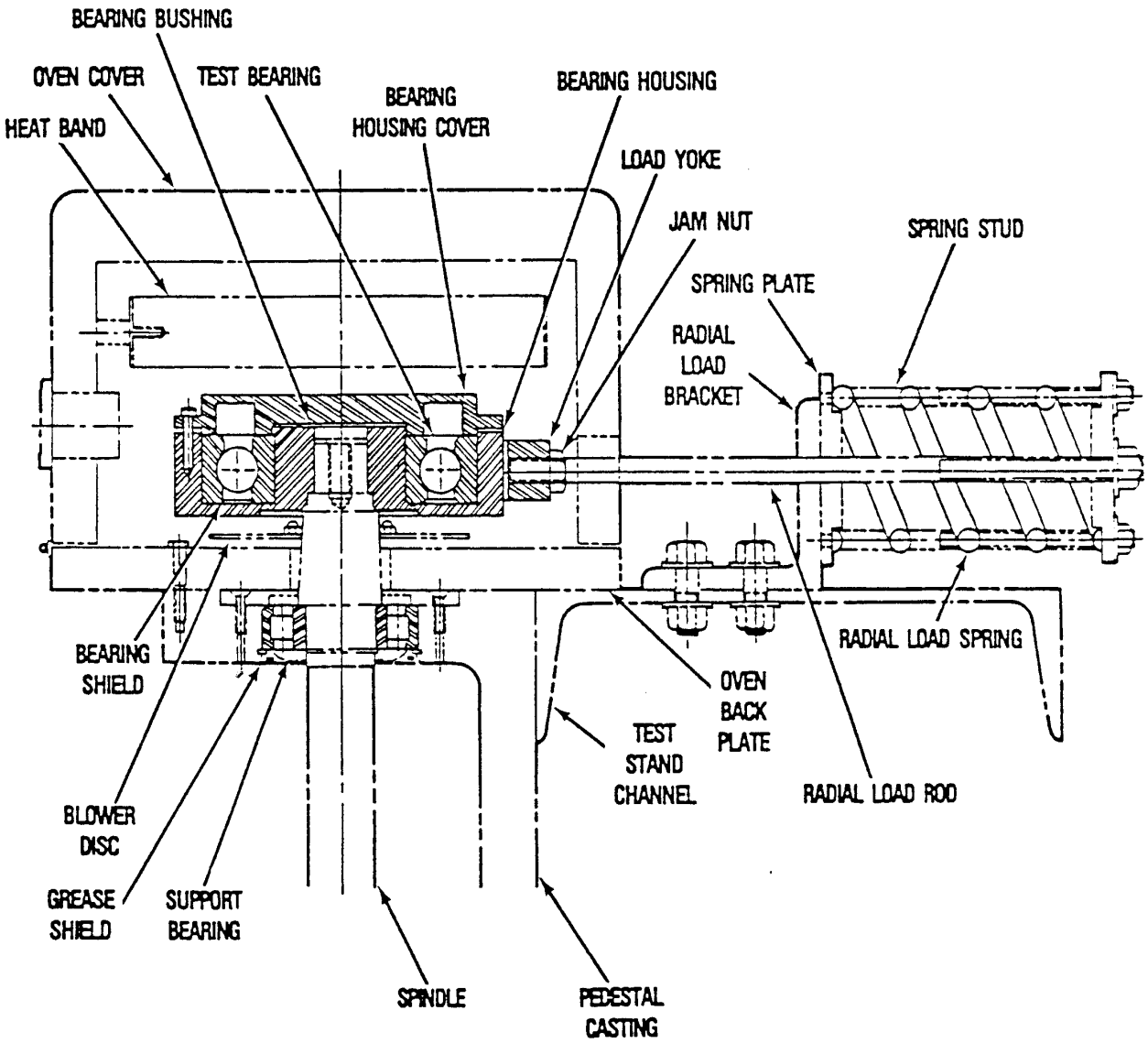

FIGURE 1. Performance tester assembly for: 315 ball bearing.

Downloaded from http://www.everyspec.com

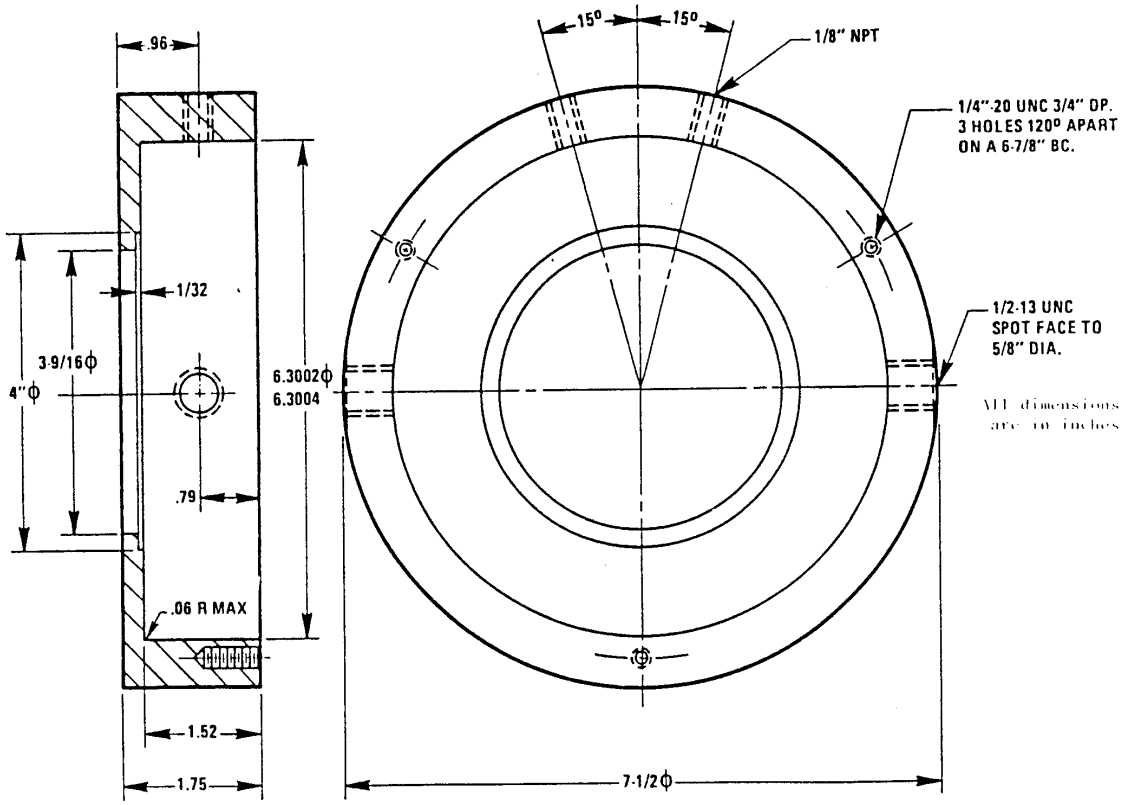

FIGURE 2a. Test bearing housing.

Downloaded from http://www.everyspec.com

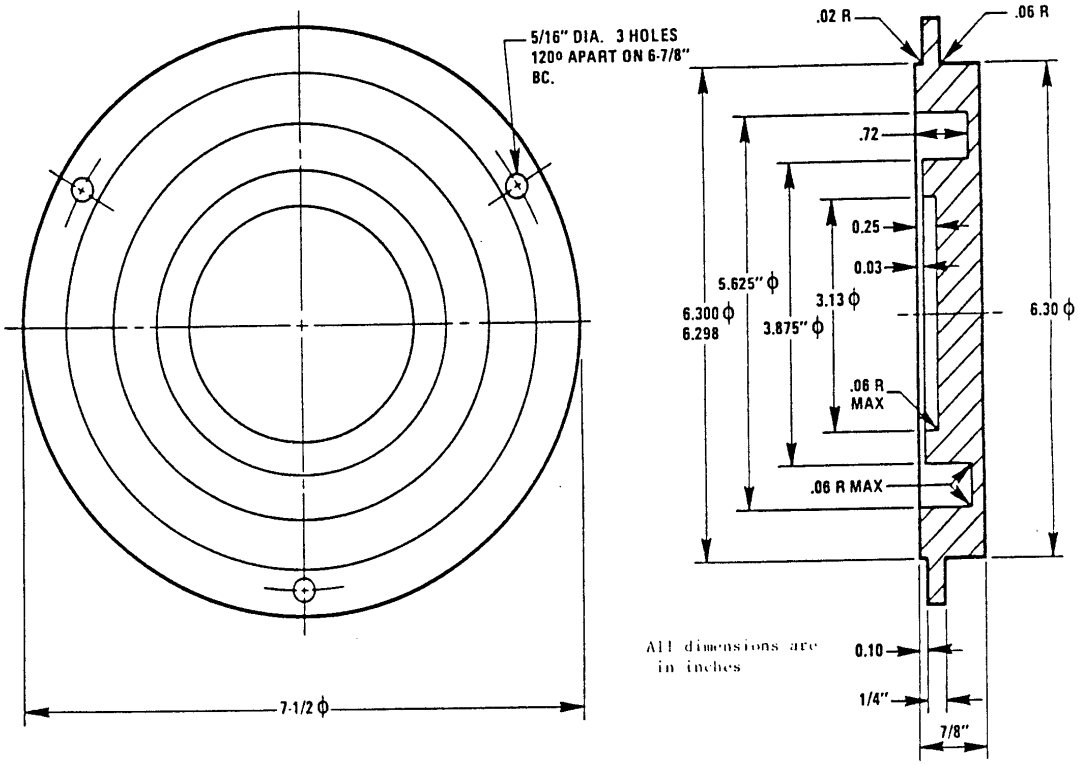

FIGURE 2b. Test bearing cover.

Downloaded from http://www.everyspec.com

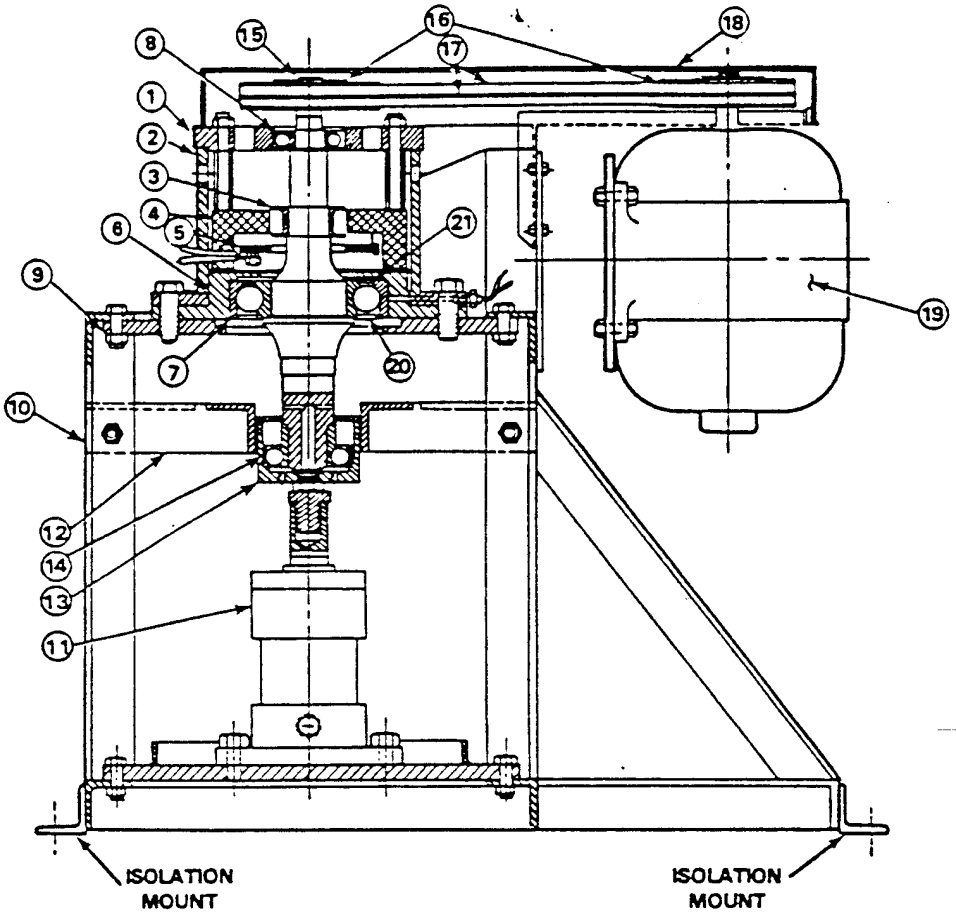

1. Upper bearing housing.
2. Support housing.
3. Spinner.
4. Heater housing
5. Heater (not used for temperature rise and leakage test).
6. Test bearing housing.
7. Test bearing.
8. Size 206 “Cartridge” bearing (removable shields).
9. Mounting plate.
10. Frame.
11. Hydraulic cylinder.
12. Torque bracket
13. Support bearing cup.
14. Size 308 angular contact bearing.
15. Shaft.
16. Drive pulleys.
17. “V” belt.
18. Belt guard.
19. Drive motor (on separate stand).
20. Bearing shield.
21. Fabricated second bearing shield.

Part Identification - Figure 4 temperature rise and leakage apparatus.

FIGURE 3. Packing and temperature rise vertical spindle.