MILITARY SPECIFICATION

BEARING UNIT, MAIN THRUST, SUBMARINE PROPULSION SYSTEM

This specification is approved for use within the Naval Sea Systems Command, Department of the Navy, and is available for use by all Departments and Agencies of the Department of Defense.

1. SCOPE

1.1 Scope. This specification covers propulsion system thrust bearing units for naval submarines, where such units combine a hydrodynamic thrust bearing, a vibration reducer and a journal (radial) bearing in a common housing and utilize an external force-fed lubricating oil system for the bearings and an external hydraulic system for the vibration reducer.

2. APPLICABLE DOCUMENTS

2.1 Government documents.

2.1.1 Specifications and standards. The following specifications and standards form a part of this specification to the extent specified herein. Unless otherwise specified, the issues of these documents shall be those listed in the issue of the Department of Defense Index of Specifications and Standards (DoDISS) and supplement thereto, cited in the solicitation.

SPECIFICATIONS

FEDERAL

QQ-C-390 - Copper Alloy Castings (Including Cast Bar).
QQ-T-390 - Tin Alloy Ingots and Castings and Lead Alloy Ingots and Castings (Antifriction Metal) for Bearing Applications.

MILITARY

MIL-S-901 - Shock Tests, H.I. (High-Impact); Shipboard Machinery, Equipment and Systems, Requirements for.
MIL-S-1222 - Studs, Bolts, Hex Cap Screws, and Nuts.
MIL-G-2697 - Glasses, Portlight, Circular, Heat Treated.

Beneficial comments (recommendations, additions, deletions) and any pertinent data which may be of use in improving this document should be addressed to: Commander, Naval Sea Systems Command, SEA 55Z3, Department of the Navy, Washington, DC 20362-5101 by using the self-addressed Standardization Document Improvement Proposal (DD Form 1426) appearing at the end of this document or by letter.

AMSC N/A FSC 3130

MILITARY (Continued)

MIL-P-2845 - Packaging of Main Propulsion Shafting, Bearings, Boat and Ship Propellers, and Associated Repair Parts.
MIL-G-2860 - Glasses, Sight-Flow, Clear, Borosilicate.
MIL-S-5000 - Steel, Chrome-Nickel-Molybdenum (E4340) Bars and Reforging Stock.
MIL-C-5015 - Connectors, Electrical, Circular Threaded, General Specification for.
MIL-S-5626 - Steel: Chrome-Molybdenum (4140) Bars, Rods, and Forging Stock (for Aircraft Applications).
MIL-R-8791 - Retainer, Packing, Hydraulic, and Pneumatic, Tetrafluoroethylene Resin.
MIL-Q-9858 - Quality Control System Requirements.
MIL-P-15024 - Plates, Tags and Bands for Identification of Equipment.
MIL-P-15024/5 - Plates, Identification.
MIL-S-15083 - Steel Castings.
MIL-C-15345 - Castings, Nonferrous, Centrifugal.
MIL-T-15377 - Temperature Monitor Equipment Naval Shipboard.
MIL-I-17244 - Indicators, Temperature, Direct-Reading, Bimetallic, (3- and 5-inch Dial).
MIL-L-17331 - Lubricating Oil, Steam Turbine and Gear, Moderate Service.
MIL-T-17600 - Turbines, Steam, Propulsion Naval Shipboard.
MIL-S-22698 - Steel Plate and Shapes, Weldable Ordinary Strength and Higher Strength: Hull Structural.
MIL-S-23284 - Steel Forgings, Carbon and Alloy, for Shafts, Sleeves, Couplings, and Stocks (Rudders and Diving Planes).
MIL-S-24093 - Steel Forgings, Carbon and Alloy Heat Treated.
MIL-T-24388 - Thermocouple and Resistance Temperature Assemblies, General Specification for (Naval Shipboard).
DOD-F-24669 - Forgings and Forging Stock, Steel Bars, Billets and Blooms, General Specification for. (Metric)
DOD-F-24669/1 - Forgings and Forging Stock, Steel (Carbon and Alloy) Blooms, Bars, Billets and Slabs. (Metric)
MIL-R-83248 - Rubber, Fluorocarbon Elastomer, High-Temperature, Fluid, and Compression Set Resistant.

STANDARDS

FEDERAL

FED-STD-H28 - Screw-Thread Standards for Federal Services.

MILITARY

MIL-STD-129 - Marking for Shipment and Storage.
MIL-STD-167-1 - Mechanical Vibrations of Shipboard Equipment (Type I - Environmental and Type II - Internally Excited).

MILITARY (Continued)

MIL-STD-167-2 - Mechanical Vibrations of Shipboard Equipment (Reciprocating Machinery and Propulsion System and Shafting) Types III, IV, and V.
MIL-STD-271 - Nondestructive Testing Requirements for Metals.
MIL-STD-278 - Fabrication Welding and Inspection; and Casting Inspection and Repair for Machinery, Piping and Pressure Vessels in Ships of the United States Navy.
MIL-STD-419 - Cleaning and Protecting Piping, Tubing, and Fittings for Hydraulic Power Transmission Equipment.
MIL-STD-438 - Schedule of Piping, Valves, Fittings, and Associated Piping Components for Submarine Service.
MIL-STD-882 - System Safety Program Requirements.
DOD-STD-2183 - Bond Testing, Babbitt Lined Bearings.

2.1.2 Other Government documents, drawings, and publications. The following other Government documents, drawings, and publications form a part of this specification to the extent specified herein. Unless otherwise specified, the issues shall be those in effect on the date of the solicitation.

DESIGN DATA SHEETS (DDS)

072-1 - Shock Design Values.
243-1 - Propulsion Shafting.

DRAWINGS

NAVAL SEA SYSTEMS COMMAND (NAVSEA)

803-2145807 - Propulsion Shafting and Components.

PUBLICATIONS

NAVAL SEA SYSTEMS COMMAND (NAVSEA)

0283-LP-228-1000 - Bearing Babbitting Procedures.
NAVSHIPS 250-644-1 - Measurement of Bearing Reactions.

SUPERVISOR OF SHIPBUILDING, THIRD NAVAL DISTRICT

SUPSHIP 280-8 - Shock Design Criteria for TRIDENT Submarines.

(Copies of specifications, standards, drawings, and publications required by contractors in connection with specific acquisition functions should be obtained from the contracting activity or as directed by the contracting activity.)

2.2 Other publications. The following documents form a part of this specification to the extent specified herein. Unless otherwise specified, the issues of the documents which are DoD adopted shall be those listed in the issue of the DoDISS specified in the solicitation. Unless otherwise specified, the issues of documents not listed in the DoDISS shall be the issue of the nongovernment documents which is current on the date of the solicitation.

AMERICAN NATIONAL STANDARD INSTITUTE (ANSI)

Y14.36 - Surface Texture Symbols. (DoD adopted)

(Application for copies should be addressed to the American National Standards Institute, 1430 Broadway, New York, NY 10018.)

AMERICAN SOCIETY FOR TESTING AND MATERIALS (ASTM)

A 108 - Standard Specification for Steel Bars, Carbon, Cold-Finished, Standard Quality. (DoD adopted)

A 485 - Standard Specification for High Hardenability Bearing Steels. (DoD adopted)

A 512 - Standard Specification for Cold-Drawn Buttweld Carbon Steel Mechanical Tubing.

A 513 - Standard Specification for Electric-Resistance-Welded Carbon and Alloy Steel Mechanical Tubing. (DoD adopted)

A 516 - Standard Specification for Pressure Vessel Plates, Carbon Steel, for Moderate- and Lower-Temperature Service. (DoD adopted)

A 519 - Standard Specification for Seamless Carbon and Alloy Steel Mechanical Tubing. (DoD adopted)

A 541 - Standard Specification for Steel Forgings, Carbon and Alloy, Quenched and Tempered, for Pressure Vessel Components.

A 576 - Standard Specification for Steel Bars, Carbon, Hot-Wrought, Special Quality. (DoD adopted)

A 675 - Standard Specification for Steel Bars, Carbon, Hot-Wrought, Special Quality, Mechanical Property. (DoD adopted)

A 686 - Standard Specification for Carbon Tool Steels. (DoD adopted)

A 830 - Standard Specification for Plates, Carbon Steel, Structural Quality, Furnished to Chemical Composition Requirements.

B 26 - Standard Specification for Aluminum-Alloy Sand Castings. (DoD adopted)

B 108 - Standard Specification for Aluminum-Alloy Permanent Mold Castings. (DoD adopted)

B 209 - Standard Specification for Aluminum and Aluminum-Alloy Sheet and Plate. (Metric) (DoD adopted)

E 208 - Standard Method for Conducting Drop-Weight Test to Determine Nil-Ductility Transition Temperature of Ferritic Steels.

(Application for copies should be addressed to the American Society for Testing and Materials, 1916 Race Street, Philadelphia, PA 19103.)

(Nongovernment standards and other publications are normally available from the organizations which prepare or which distribute the documents. These documents also may be available in or through libraries or other informational services.)

2.3 Order of precedence. In the event of a conflict between the text of this specification and the references cited herein (except for associated detail specifications, specification sheets or MS standards), the text of this specification shall take precedence. Nothing in this specification, however, shall supersede applicable laws and regulations unless a specific exemption has been obtained.

3. REQUIREMENTS

3.1 First article. When specified in the contract or purchase order, a sample shall be subjected to first article inspection (see 4.3 and 6.3).

3.2 Design.

3.2.1 General. The thrust bearing unit shall incorporate bearings which provide longitudinal and radial restraint for the propulsion shafting and shall contain those elements of a vibration reducer system delineated in 3.2.10.3.5. Provision shall be made on the housing to accept oil supply, return and drain lines, and for all instrumentation and control connections necessary for the operation, control, and monitoring of the unit and the vibration reducer. Oil seals are to be provided at all housing penetrations. The design shall include features that facilitate inspections, maintenance, repairs and overhauls.

3.2.1.1 Major components. The major components are the housing, a thrust shaft with an integral thrust collar, a hydrodynamic journal bearing, pivoted ahead and astern hydrodynamic thrust shoes, mechanical or mechanical/hydraulic elements to equalize the thrust load between the shoes transmitting the thrust load, and connections to a hydraulic system of the vibration reducer system. Journal bearing shall support one end of the thrust shaft and may provide radial support for other portions of main shafting.

3.2.1.2 Criticality. Thrust bearing unit is a critical element of the submarine propulsion plant. Bearing unit shall perform over the entire operating range of the ship as specified in 3.2.3.

3.2.2 Reliability. The principle of reliability is paramount and no compromise of this principle shall be made with any requirement. It is intended that no part shall be replaced nor repaired during the specified design life (see 3.2.7) except for damage incurred due to external causes unrelated to design. Planned maintenance actions and associated periodicities shall be provided as part of the design report (see 3.8.3). The reliability design requirement shall be as specified (see 6.2.1) except for those parts which are readily replaceable and subject to heavy wear or erosion. For these parts, the MTBF is 20,000 hours with an associated mean-time-to-repair (MTTR) of no more than 24 man-hours. Reliability reports shall be as specified (see 4.7.5 and 6.2.1) and shall be prepared in accordance with the data ordering documents included in the contract or order (see 6.2.2).

3.2.3 Operating conditions. Bearing unit shall operate satisfactorily when supplied with lubricating oil, as specified in 3.4.1, under the loads defined herein and any possible combinations thereof. The numerical values of the loads (and speeds, where applicable) shall be as specified in the contract or order (see 6.2.1).

(a) Ahead propulsive thrust load. The range from minimum continuous ahead propulsive thrust at minimum sustained ahead shaft speed to design full power ahead propulsive thrust at maximum design ahead shaft speed.

(b) Astern propulsive thrust load. The range from minimum continuous astern propulsive thrust at minimum sustained astern shaft speed to design full power astern propulsive thrust at maximum design shaft speed.

(c) Thrust load due to full rudder maneuvers. Additional thrust equal to 20 percent of ahead propulsive thrust during ahead operation and 20 percent of astern propulsive thrust during astern operation. Full rudder maneuvers may be conducted at any speed, and time duration is not limited.

(d) Submergence thrust load. The range from zero to design maximum submergence thrust. Design maximum submergence thrust is defined as the thrust that occurs from seawater pressure at design depth acting on the shaft cross-sectional area and shaft seal up to the seal balance diameter.

(e) Maximum steady journal load. Design maximum value of load on radial bearing due to weight of propulsion shaft components supported by the bearing as determined from final shafting arrangement and alignment schedule and including the effect of alignment tolerances, alignment changes during operation, resilient mount drift, bearing weardown and forces and moments imposed by propulsor and flexible couplings. Orientation of line-of-action of journal load relative to radial bearing will vary as a function of ship's attitude (roll and list). Radial bearing shall be designed to operate satisfactorily under maximum steady journal load over the full range of list and roll motions defined in 3.2.3(f).

(f) Thrust loads from trim, list, roll and pitch. Thrust loads resulting from trim, list, and dynamic motions (roll and pitch) of ship, while it is operating submerged, at snorkelling depth and on the surface. Trim and list or roll and pitch can occur simultaneously. The following shall be as specified (see 6.2.1).

1. Maximum permanent trim angle, down bow or stern.
2. Maximum permanent list angle, port or starboard.
3. Maximum roll angle and cycle time, port or starboard from even keel.
4. Maximum pitch angle and cycle time, up or down from normal water line.

Under some casualty conditions, trim angle may be up to 45 degrees. Bearing unit shall operate satisfactorily at this trim angle, but some oil leakage past seals is permitted (see 3.2.10.3.8).

(g) Transient thrust during crash ahead and crash astern maneuvers. Additional thrust equal to 100 percent of design full power ahead or astern propulsive thrust for durations of up to 3 seconds. This load does not occur simultaneously with the full rudder maneuver load cited in 3.2.3(c).

(h) Gyroscopic loads, thrust and radial. Reactions to gyroscopic moments during ship turning maneuvers.

(i) Vibratory loads, thrust and radial. Dynamic loads due to mechanical vibrations (see 3.2.5).
(j) Shock loads, thrust and radial. Loads determined from qualification design of bearing unit for resistance to shock (see 3.2.6).
(k) Additional loads. Any additional radial and thrust loads specified (see 6.2.1).

Bearing unit is also required to operate satisfactorily under zero net thrust load at minimum sustained ahead shaft speed and at any astern shaft speed.

3.2.3.1 Angle between thrust shaft and housing axes. Bearing unit shall be capable of accommodating a small angular deviation from true parallelism between the thrust shaft and the bearing housing axes without degradation of performance. The magnitude of this angular deviation (in minutes of arc) shall be as specified (see 6.2.1) and the direction shall be such as to increase the clearance between the thrust collar and the uppermost ahead thrust shoes. The angle between the two center lines at initial installation with the ship afloat shall be determined by the shipbuilder.

3.2.3.2 Active and any inactive condition of vibration reducer. Thrust bearing unit shall operate satisfactorily with the vibration reducer in the active and any inactive condition. There shall be no limitations on the operating loads defined in 3.2.3 and as specified (see 6.2.1) when the vibration reducer is active. Load limitations associated with any inactive vibration reducer operation shall be determined by the bearing contractor. Speed and depth limitations associated with any inactive operation of the vibration reducer will be determined by the shipbuilder and submitted to the Naval Sea Systems Command (NAVSEA) for approval.

3.2.3.3 Test requirements. Testing shall be in accordance with 4.6.

3.2.4 Size, weight and space limitations. The equipment shall be small, compact, and light as possible, consistent with satisfactory performance and reliability, but in no event shall the size, weight, and disassembly space requirements specified (see 6.2.1) be exceeded.

3.2.5 Noise and vibration. Thrust bearing unit shall be designed to minimize propulsion system noise and vibration generation and transmission to the ship structure, in accordance with MIL-STD-167-1 for type II vibrations and MIL-STD-167-2 for types III, IV and V vibrations. The design report (see 3.8.3.1) shall include a description of the design features incorporated in the thrust bearing design to assist in reducing propulsion system noise and vibration. The report shall also include the thrust bearing dynamic parameters that are necessary to support the propulsion system vibration analysis that will be performed for types III, IV, and V mechanical vibrations in accordance with MIL-STD-167-2 by the shipbuilder or the prime propulsion machinery subcontractor. In addition, thrust bearing units shall be designed to withstand environmental vibrations, type I of MIL-STD-167-1. Due to size and weight limitations, the complete thrust bearing assembly is not required to be tested for type I environmental vibrations in accordance with MIL-STD-167-1, but individual components shall be tested where practicable (see 4.6.1.13).

3.2.6 Shock resistance. Thrust bearing unit shall be designed for resistance to shock loading in accordance with either 3.2.6.1, 3.2.6.2, or 3.2.6.3, whichever procedure is specified (see 6.2.1).

3.2.6.1 Static design. Numerical values shall be in accordance with tables I and II (see 6.2.1).

TABLE I. Shock design loads.

Load source	Direction of load		
	Vertical	Athwartship	Fore and aft
Load on bearings due to shock acceleration of thrust shaft and connected shafting and propeller	+ xxx lb (Journal bearing)	+ xxx lb (Journal bearing)	+ xxx lb (Thrust bearing)
Load on foundation flange and bolting due to shock acceleration of nonrotating parts (housing and internals)	+ xxx lb	+ xxx lb	+ xxx lb

TABLE II. Shock design accelerations.

Direction	Acceleration
Vertical	+ xx g's
Athwartship	+ xx g's
Fore and aft	+ xx g's

Static shock design shall be based on application of the loads of table I, in one direction at a time. Loads from both sources shall be applied simultaneously for each of the three directions. In vertical and athwartship shock, the shafting load shall be applied at the mid-point of the journal bearing. In fore and aft shock, the shafting load shall be applied uniformly to the thrust shoes. In all directions of shock, the load due to nonrotating parts shall be taken to act at the center of gravity of the nonrotating parts. Loads imposed by individual nonrotating parts, other than those covered in table I, shall be calculated by the contractor by multiplying their weight by the acceleration given in table II. These loads shall be included in the design report (see 3.8.3.1). Allowable stresses shall be in accordance with MIL-T-17600. It is required in this specification that shock and operating stresses be combined when comparing calculated stresses against allowable stresses.

3.2.6.1.1 Allowable stresses. The combination of calculated shock and operating stresses shall not exceed the effective yield strength. For this purpose, the effective yield strengths in tension, shear and crush shall be calculated from the 0.2 percent offset yield strength of the material, at operating temperature, using the equations specified in MIL-T-17600 for static shock design of main propulsion steam turbine equipment. For babbitted bearings, the 0.2 percent offset yield strength shall be limited to 20,000 pounds per square inch, unless otherwise approved by NAVSEA. The calculated combined shock and operating stresses and the comparison with calculated allowable stresses shall be included in the design report (see 3.8.3.1).

3.2.6.2 Dynamic design. Bearing unit shall be designed for grade A shock resistance in accordance with SUPSHIP 280-8. The contractor shall be provided with both DDS-072-1 and sufficient details of the propulsion shafting system, including bearing foundation stiffness and other details of the ship structure, to permit mathematical modeling of the thrust bearing assembly for the purposes of dynamic analysis. Contractor shall prepare as part of the design report the dynamic analysis model and the dynamic analysis (see 3.8.3.1).

3.2.6.3 Shock testing. Bearing unit shall be designed to pass shock test verification in accordance with the test requirements of MIL-S-901, grade A equipment or as specified (see 4.6.1.12).

3.2.7 Life expectancy. Thrust bearing unit shall be designed for 30 years service life, including 150,000 hours of operation with only routine maintenance and without any repair which requires removing the thrust bearing unit or the thrust shaft from the ship. If not otherwise specified (see 6.2.1), the 150,000-hour operating life shall consist of 15,000 hours at full power, 60,000 hours at between 50 percent and 100 percent of full power, and 75,000 hours at below 50 percent of full power. Readily replaceable parts that are subject to heavy wear or erosion shall be designed for at least 20,000 hours of operation under any combination of the above conditions, without servicing or replacement. A list of these parts shall be developed by the contractor and included in the design report (see 3.8.3.1).

3.2.8 Accessibility. Design shall provide maximum accessibility to bearing unit parts which require routine examination, maintenance, and repairs. It is intended that the design provide minimum effort required to accomplish planned maintenance actions and to effect repairs.

3.2.9 Interchangeability. Bearing unit parts whose designs are identical shall be interchangeable in installation and service. The parts shall be capable of installation in their designated locations without selective assembly, special fitting, machining, running-in or other such preparation. Exceptions to this interchangeability requirement are permitted only if approved by NAVSEA and the exceptions noted on applicable drawings. Doweling or equivalent provision shall be made to prevent installation of parts in locations or positions for which they were not intended.

3.2.10 Thrust bearing unit.

3.2.10.1 Housing. The housing shall be designed to mate with the foundation provided by the shipbuilder (see 6.2.1) at the horizontal plane passing through the axis of the shaft and shall be split on a horizontal plane to permit access to the bearing elements. Elements such as fitted bolts or tapered pins shall be designed by the contractor to provide a positive and repeatable fit between the mating halves of the housing. Separate bolts shall be used to attach the lower half of the housing to the foundation. Bolts used to attach the upper and lower halves of the housing may also be used to attach the upper half of the housing to the foundation. Jacking bolts and tapped holes shall be provided to facilitate separation of the flanges of mating halves of the housing. The housing shall be sufficiently rigid to provide proper support for the thrust bearings, and housing

deflections resulting from thrust loads shall not impose strain on the journal bearing. The housing shall be oil tight and shall be heat treated such that spontaneous dimensional changes over its 30-year design life will not result in any linear or angular dimension falling outside the design limits.

3.2.10.1.1 Housing internals. A partition shall be provided between the thrust and radial bearings to allow the thrust bearing to operate in a flooded condition while allowing the radial bearing to discharge its oil to a drain cavity. Housing shall provide the stationary seats for the shaft seals that prevent oil leakage from the thrust bearing cavity. The interior surface of the housing shall be smooth and free of any dirt entrapping pockets. Oil supply piping and drains, as well as openings, ports, and bosses required for the vibration reducer system, shall be integrally cast or attached by welding in accordance with MIL-STD-278. Threaded connections are not permitted unless approved by NAVSEA. Lugs to support thrust shaft lifting yokes shall be provided. Pad eyes for lifting the housing cap shall be provided and their locations shall be identified in the technical manual (see 3.8.2). The housing shall be such that it can accommodate a standard self-leveling ahead thrust bearing in place of the normally installed vibration reducer elements without any modification to the housing that involves machining, welding or removal of the housing from the ship.

3.2.10.1.2 Housing resistance temperature element (RTE) connections. Passageways for RTE leads shall be provided in the housing. Terminals for the connection to the bearing shall be provided at a location that will provide minimum hazard to the jumper wires connecting the bearing insert terminal to the housing internal terminals. A connection box for the RTE leads shall be provided on the exterior of the housing. Passageways shall provide full protection for RTE leads and provision for preventing oil leakage through the passageways. RTE leads shall be secured to prevent pinching or binding when cap is lowered and the bolts are tightened. Caution plate calling for disconnection of RTE lead wires before lifting upper half of housing or removing bearing elements (see 3.4.2.7) shall be affixed to exterior of housing cap.

3.2.10.1.3 Housing cap. Housing cap shall close the upper half of the bearing housing and provide the support structure for the bearing shell assembly in the event an upward net load is encountered. Cap shall allow the free passage of the sight flow indicator piping without allowing the escape of oil from the interior of the cap.

3.2.10.2 Thrust shaft. The thrust shaft shall be made from a single forging of steel (see table III) with integral end flanges and thrust collar. The shaft outside and inside diameters necessary to satisfy the design requirements of the propulsion shafting DDS-243-1 shall be specified by the shipbuilder (see 6.2.1). The thrust shaft shall be in accordance with Drawing 803-2145807 except for the following:

(a) The radius at the joint of the thrust collar and shaft may be less than 20 percent of the shaft outside diameter.
(b) The shaft bore may be other than 2/3 of the shaft outside diameter.

The configuration of the coupling(s) to which the end flange(s) mate will be furnished by the shipbuilder except where the flange mates to another element furnished by the thrust bearing unit vendor.

3.2.10.2.1 Sight bore. A 1-inch (or greater) diameter hole shall be bored through the center of the shaft for bore sighting during installation. Leaktight plugs, in accordance with Drawing 803-2145807, shall be provided separately for both ends of the shaft bore. Leaktight plugs will be installed by the shipbuilder subsequent to machinery alignment.

3.2.10.2.2 Thrust collar parallelism. Thrust collar load bearing surfaces shall be parallel within plus or minus 0.0005 inch and shall be perpendicular to the radial bearing journal surface within plus or minus 0.0005 inch at the radius corresponding to the outside diameter of the thrust bearing shoes.

3.2.10.2.3 Journal surface. Radial bearing journal surface shall have less than 0.0004-inch taper over the full journal length. The ends of the journal surface shall blend into the shaft surface. The length of the journal surface shall allow positioning of the thrust collar at any longitudinal position within the design range of the thrust bearing and shims without the reduced shaft diameter being brought inside the radial bearing end seals..

3.2.10.2.4 Journal roundness. Special attention shall be paid to roundness of journals. Deviation from true roundness shall not exceed 0.00025 inch. Deviation from true roundness is defined as the difference in radii of two concentric coplanar circles when the annulus between their perimeters just contains the complete measured profile of the journal surface.

3.2.10.2.5 Seal locations. Seal locations on the thrust shaft shall be finish ground over the full longitudinal positioning range of the thrust collar. Seal surfaces shall be concentric with the journal surface within plus or minus 0.0005 inch.

3.2.10.3 Thrust bearing. The thrust bearing shall be a pivoted-shoe hydrodynamic thrust bearing designed to accept either ahead or astern thrust by the use of two sets of shoes, one located forward and one aft of the thrust collar. It shall operate in the oil flooded section of the bearing housing. Each set of shoes shall transmit its thrust load to the thrust bearing unit housing through a load-equalizing system. The forward load equalizing system shall consist of a set of hydraulic pistons, one per shoe, with the cylinders connected to a single external oil supply so as to maintain the same hydraulic pressure in back of each piston. The pistons, cylinders, cell-plate for the cylinders, hydraulic oil system and connections are all part of the vibration reducer (see 3.2.10.3.5). The after load equalizing system shall employ a base ring assembly, where loads from each shoe act on mechanical load equalizing links which in turn act on base ring and then the housing. The thrust bearing clearance (end clearance) and longitudinal location of the ahead and astern shoe assemblies shall be determined by shim plates that are ground to the required thickness to meet the positioning and clearance requirements (see 3.2.10.3.7). Shim plates shall mate with flat finished surfaces in the thrust housing. Stacking of shims shall not be permitted, and shims and thrust shoes shall neither be attached to nor derive support from the journal bearing.

3.2.10.3.1 Maximum unit load. Maximum unit load during continuous operation shall not exceed 500 pounds per square inch on either the ahead or the astern shoes. For this computation, the effective bearing area shall be the full, babbitted surface area of the appropriate (ahead or astern) set of thrust shoes. The maximum load on the ahead shoes shall be the sum of 120 percent of the design

full power ahead propulsive thrust load and design maximum submergence thrust load. The maximum load on the astern shoes shall be 120 percent of the design full power astern propulsive thrust load. Transient and shock loads shall not be included in the calculation.

3.2.10.3.2 Thrust shoes. Thrust shoes shall be made of wrought or cast steel, heat treated as necessary to relieve residual stresses, and faced with babbitt. The babbitting process shall be in general accordance with NAVSEA 0283-LP-228-1000 and bond tested in accordance with DOD-STD-2183. Anchor grooves and holes in the babbitt-steel interface shall be prohibited. The babbitt layer design thickness shall be 0.1875 plus or minus 0.035 inch. The babbitt face shall be finished so as to be flat to 0.0005 inch convex at the center. Concavity of the surface shall not be permitted. Each shoe shall be equipped with a hardened steel button on its back face to transmit load to load equalizing system. The button shall extend sufficiently beyond the back of the shoe to allow the shoe full freedom to tilt within the thrust bearing clearance. For shoes used with hydraulic load equalization system, face of button shall be flat to mate with spherical crown on vibration reducer piston (see 3.2.10.3.5.2). For shoes used with mechanical load equalization system, face of button shall have spherical crown to mate with flat surface on levelling link (see 3.2.10.3.3). Each shoe shall be drilled and tapped on its outer circumferential center line to permit the installation of an eyebolt for handling. Thrust shoes shall be supplied in sets which shall be installed together. The thickness of a thrust shoe is defined as the distance from the back surface of the hardened steel button to the corresponding point on the babbitted face of the shoe. The largest difference in thickness between the shoes in a set shall not exceed 0.002 inch for shoes using mechanical load equalization and 0.001 inch for shoes using hydraulic load equalization. Identification marking shall be assigned to each set of shoes and inscribed on one side of each shoe of the set.

3.2.10.3.3 Load equalizing links. The after base ring shall be equipped with load equalizing links (leveling links) designed to distribute the astern thrust uniformly (within plus or minus 15 percent) among the shoes in the astern thrust bearing. Each link in direct contact with a shoe shall be provided with a hardened steel insert positioned to provide the design pivot point for the shoe. Contact shall be that of a sphere on a flat. The spherical crown radius in the buttons of the thrust shoes (see 3.2.10.3.2), as well as the radii in the contacts between links and between the links and the base ring, shall be chosen such that plastic deformation of the surfaces does not occur when the thrust load is the sum of shock loads and maximum continuous astern propulsive load, or when the thrust load is equal to the force exerted during the hydrostatic test of the vibration reducer system (see 4.6.1.8), whichever is greater. The contact stress calculations shall be provided in the design report (see 3.8.3.1).

3.2.10.3.4 Base ring and cell plate. Base ring (in the astern assembly) and cell plate (in the ahead assembly) shall be designed to contain the load equalizing mechanism and to position the crowned pivots at the proper point on the shoe button so as to prevent sliding motion between load equalizing mechanism and base ring or cell plate and between shoes and base ring or cell plate. The cell plate shall provide for the hydraulic pistons and cylinders of the vibration reducer system and for the connection of each piston with the source of hydraulic pressure. There shall be no hydraulic interconnection of the halves of the cell plate within the bearing unit housing. After base ring shall

restrain and position the links of the load equalizing system and the shoes of the thrust bearing. The base ring and cell plate shall mate with the ground shims placed between them and the housing. Distortion caused by applied operational loads shall not hinder the performance of the load equalizing mechanism. After base ring assembly dimensions shall allow it to be installed in the space provided for the forward cell plate assembly (same boundary dimension except for hydraulic connections).

3.2.10.3.5 Vibration reducer system. Vibration reducer system shall provide support and load equalization for the ahead thrust shoes, control longitudinal thrust collar position, and minimize the transfer of propulsor longitudinal alternating thrust forces into the thrust bearing structural assembly. The vibration reducer system shall consist of hydraulic piston and cylinder assemblies, hydraulic oil flasks, piping, controls and instrumentation (see 6.2.1). The external part of the vibration reducer system including hydraulic oil flasks, external piping, controls, and instrumentation shall be supplied by the shipbuilder.

3.2.10.3.5.1 Hydraulic oil and connections. Oil shall conform to lubricating oil in accordance with MIL-L-17331 (military symbol 2190TEP). The necessary openings, ports, and bosses on the thrust bearing housing which connect with the external part of the vibration reducer hydraulic system, as described in 3.2.10.1.1, shall be as specified (see 6.2.1).

3.2.10.3.5.2 Hydraulic piston-cylinder assemblies and hydraulic requirements. Each ahead thrust shoe shall be supported by a separate hydraulic piston-cylinder assembly. General design configuration of the piston-cylinder assembly shall be as specified (see 6.2.1). Hydraulic piston-cylinder assemblies shall be interconnected through a common internal manifold in each half of the base ring and provisions shall be made to permit external connections. Pistons shall be designed to support the thrust loads specified in 3.2.3 at a maximum working pressure as specified (see 6.2.1). System shall be capable of sustaining hydrostatic test at 150 percent of the maximum working pressure as specified (see 6.2.1) without permanent deformation or other damage (see 4.6.1.8).

3.2.10.3.5.3 Piston surface. Spherical crown radius on shoe supporting surface of each piston (see 3.2.10.3.2) shall be chosen such that plastic deformation of surfaces does not occur when the thrust load is the sum of the shock load, the maximum continuous ahead thrust load, and the maximum submergence thrust load, or when the thrust load is equal to the force exerted by the hydrostatic test of the vibration reducer system (see 3.2.10.3.5.2). Contact stress calculation shall be provided in the design report (see 3.8.3.1).

3.2.10.3.5.4 Vibration reducer shimming. Piston-cylinder assembly design shall include a method of adjusting, during installation, the assembly stacked height to compensate for tolerance stackup and asymmetric housing deflections. Methods may include grinding material from individual piston shims, removal of material from shims associated with the cylinder or removal of material from the piston.

3.2.10.3.5.5 Longitudinal thrust collar position control and instrumentation. Vibration reducer system shall maintain the thrust collar near the center of longitudinal thrust clearance by controlling the hydraulic pressure in the cylinders of the vibration reducer. The system shall ensure that, under normal

operating conditions, no piston can be made to operate in contact with its supporting cylinder ("hard-up" condition) for more than 5 seconds. The contractor shall provide a device that follows the thrust collar position and actuates the vibration reducer control system as specified in 6.2.1. To provide visual indication of the thrust collar position, the contractor shall provide a meter (accurate to within 2 percent of the thrust clearance) that is connected to this same device. The contractor shall also provide limit switches to actuate alarms showing the approach of the "hard-up" condition.

3.2.10.3.6 Thrust clearance. Thrust bearing clearances shall be as specified (see 6.2.1).

3.2.10.3.7 Liners or shims. Split plates (liners or shims) shall be fitted between each backing ring or cell plate and the bearing housing. The thickness of the plates shall not vary more than 0.001 inch. Plates shall be ground to the thickness required to establish the thrust bearing longitudinal clearance. Stacking of plates shall not be permitted.

3.2.10.3.8 Oil seals. Floating split ring seals shall be installed such that the flooded thrust bearing cavity is sealed from the rest of the thrust bearing housing and the journal bearing cavity. The seals shall rest on smooth finished lands. Restraints shall be employed to prevent the ring seals from becoming locked either on the shaft or the housing as a result of axial motion of the shaft. End seals shall be provided as necessary to prevent leakage of oil from the bearing housing. Clearance seals shall be used in preference to rubbing contact seals. Radial clearance between seals and the shaft shall be appropriate for all relative radial motions of the shaft, but, in no event, shall it be less than 0.005 inch, except for felt seals. An internal gutter or trough shall be provided as part of the seals to carry off oil thrown on upper part of housing as a result of centrifugal force. Seals shall be of a design which permits ready repair or renewal. Zero leakage is required for trim angles up to 30 degrees. Two ounces per hour shall be permitted for trim angles between 30 and 45 degrees. Shipbuilder shall make necessary provisions so that oil leakage can be collected and measured in accordance with 4.6.1.9.

3.2.10.4 Journal bearing. Journal bearing shall be a hydrodynamic, self-aligning type bearing accommodating all radial loads and operating conditions as specified (see 3.2.3). A thick-walled babbitted shell type bearing shall be used. Thick-walled babbitted shell bearing shall consist of a cap, pedestal and upper and lower shells. Figure 1 illustrates the components. Bearing shells shall be horizontally split with and both halves shall have drilled and tapped holes in the sides of the steel regions for handling.

3.2.10.4.1 Bearing babbitting. Bearing shells shall be statically or centrifugally lined with babbitt to a thickness of 0.125 $\pm$ 0.035 inch. Babbitt anchor grooves or holes shall be prohibited. The cooling or vibration imposed in casting shall be such that dendritic structures in the babbitt are prevented. Bearing babbitting procedures shall be performed in accordance with NAVSEA 0283-LP-228-1000. Bond testing shall be performed in accordance with DOD-STD-2183.

3.2.10.4.2 Oil grooves. Babbitt lining shall be grooved to provide oil distribution to bearing lands. Unless otherwise specified in the ordering document (see 6.2.1), oil distribution to lower, or loaded, bearing half shall be by means of axial grooves that start at the horizontal split line and are blended into the bearing land so as to facilitate oil flow to the land. The ends of the axial oil distribution grooves shall be closed, except for dirt-relief chamfers that connect to circumferential drain grooves or to the bearing ends. Circumferential drain grooves, if used in the lower bearing half, shall be located near one or both ends of the bearing. No other grooves are allowed in the load supporting land of the lower bearing half. Upper bearing half shall incorporate circumferential grooves as required to supply the oil to the axial oil distribution grooves. The oil grooves and chamfers shall be sized to insure that the oil flow to the bearing is sufficient to maintain a full oil film and meet the babbitt temperature and oil temperature rise limitations specified in 3.2.10.4.6. A partial or complete circumferential groove, as appropriate, shall be provided near one end of the bearing sized to supply the oil required by the bearing sight-flow indicator (see 3.4.1.5). Oil supply passageways through the wall of the bearing shell shall be rounded with a radius of at least 0.25 inch where the passageways meet the oil inlet or distribution grooves. The bearing shell shall contain the drilled holes required to supply oil to the inlet or distribution grooves of the bearing and to mate with the supply line to the sight flow indicator.

3.2.10.4.3 Fit and securement of bearing parts. Shell halves shall be equipped with dowels that will ensure exact registry of the surfaces. Shell halves shall be secured with bolts. The design of these bolts shall be the responsiblity of the contractor. Provision shall be made to prevent large angular rotations (greater than required for misalignment) or axial displacements between bearing shells and cap and pedestal.

3.2.10.4.4 Oil connections. Oil connections shall not restrain the self-aligning characteristics of the shell assembly. Bearing pedestal shall be integral with the lower half of the thrust bearing housing. Pedestal shall support the bearing shell assembly and provide an area for oil drainage.

3.2.10.4.5 Removal. Lower half bearing shell shall be arranged to roll out freely without removing the shaft when the weight of the shaft is supported by a lifting device. RTE wires must be disconnected before rolling out lower half of bearing shell (see 3.4.2.4).

3.2.10.4.6 Film thickness and babbitt temperature. Minimum film thickness in radial bearing shall be calculated at rated operating conditions. Calculation procedure and results shall be included in design report (see 3.8.3.1). For the purpose of these calculations, rated operating conditions are as follows: maximum steady journal load (see 3.2.3), 130 degrees Fahrenheit (°F) oil inlet temperature and maximum ahead design speed for ahead operation and maximum astern design speed for astern operation. Maximum babbitt temperature (as measured by RTE in the babbitt) shall not exceed 250°F with an oil inlet temperature of 130°F.

3.2.10.4.7 Clearance. Diametral clearance of the bearing shall be not less than 0.0015 inch per inch of diameter at 68°F and not less than 0.0010 inch per inch of diameter when full account is taken of the most adverse continuous or transient radial temperature gradient in the journal bearing shell assembly as determined from the operating conditions specified in 3.2.3. Manufacturing tolerance on finished bore diameter shall not exceed 0.0015 inch total or 0.0001 inch per inch of bearing diameter, whichever is greater.

3.2.10.4.8 Boss for vibration pickup. Each bearing cap shall be provided with a boss for mounting a vibration pickup. Boss shall be approximately a 2-inch square located at or near the vertical centerline of the cap with a 1/4-inch, 28-thread hole, 1/2-inch deep in the center of the boss. Mounting surfaces shall be machined flat and smooth to 64 roughness height rating (RHR).

3.2.10.4.9 Contact pattern. Load shall be distributed so as to produce a rectangular contact pattern extending throughout the length of the bearing.

3.2.10.4.10 Unit load. Unit load on radial bearing shall not exceed 150 pounds per square inch during continuous operation. Unit load is defined as:

$$P = W/(LD)$$

where: P = unit load, pounds per square inch
W = radial load, pounds
L = axial length of load support land, excluding circumferential grooves, chamfers and edge radii, inches
D = bearing diameter, inches

For the purpose of this computation, the radial load W shall be the maximum, steady journal load specified (see 6.2.1). Transient and shock loads shall not be included in the calculation.

3.2.10.5 Depth micrometer wear measurement. Provision shall be made to permit the use of micrometer depth gauges for measuring wear of journal bearings without removal of bearing cap. Collar-type (flanged) plugs shall be used to close the holes and shall be attached to the bearing cover by a short length of flexible chain to prevent loss when removed. Depth micrometer constants and date of measurement shall be stamped on small plates attached to each bearing cap after final assembly and alignment by the shipbuilder. Measurements shall be made at 68°F plus or minus 2°F.

3.2.10.6 Crown thickness measurement. Provision shall be made for measuring wear by the crown thickness method, as specified in 3.2.10.6.1 through 3.2.10.6.3.

3.2.10.6.1 Bearing reference surfaces. Bearing shells shall be provided with two, full 360 degree reference surfaces near each end of the shells. One of these shall be a circumferential reference surface, concentric with the centerline of the shell within plus or minus 0.001 inch. The second reference surface shall be radial and perpendicular to the axis of revolution within plus or minus 0.0005 inch. Reference surfaces shall be finished by grinding to 16 RHR, or

better. At each end of the bearing, the distance from the end of the bearing shell to the radial reference surface, measured at the circle of intersection of the two reference surfaces, shall be established by the manufacturer and shown on the applicable drawings.

3.2.10.6.2 Scribe lines on journal bearing. The upper and lower halves of each babbitted shell shall have a vertical scribe line and two radial scribe lines at 45 degrees to the vertical, inscribed by the manufacturer, at each end of the bearing.

3.2.10.6.3 Marking of crown thickness constants. Crown thickness constants are the radial distances between the inner babbitted surface and the concentric circumferential reference surface. The crown thickness constants shall be measured, by manufacturer, at each scribe line location at each end of the bearing and marked adjacent to the scribe lines. The axial distance from the radial reference surface at which these radial measurements are made shall be recorded by the manufacturer and shown on the applicable drawings.

3.3 Materials, processes and procedures.

3.3.1 Materials. Materials shall be as specified in table III. However, it is not the intent to exclude materials of merit, when warranted by the design, provided materials are approved by NAVSEA. Contractor request for NAVSEA approval of substitute materials shall meet the requirements and follow the approval request procedure specified in MIL-T-17600 for substitute materials in main propulsion turbine equipment.

TABLE III. Materials.

Part or service	Applicable documents	Material and properties	Remarks 1/ 2/ 3/
Antifriction metal	QQ-T-390, grade 2	Babbitt (tin base)	4/
Bearing oil seal (or deflectors)	ASTM B 209	Aluminim alloy (plate or strip)	
	ASTM B 108, alloy no 850	Aluminum alloy (casting)	
	MIL-C-15345, alloy no 11	Bearing bronze (84-8-8)(casting)	
	QQ-C-390, alloy no 934	Bearing bronze (casting)	
	QQ-C-390, alloy no 836	Bearing bronze (ounce metal) (casting)	

See footnotes at end of table.

TABLE III. Materials. - Continued

Part or service	Applicable documents	Material and properties	Remarks 1/ 2/ 3/
	ASTM B 26	Aluminum alloy (casting)	
	MIL-C-15345, alloy no 7	Bearing bronze (casting)	
Bearing oil sight glass	MIL-G-2860	Glass (heat treated)	
	MIL-G-2697	Glass (heat treated)	
Bearing pedestals, caps, shells and sleeves	ASTM A 830, grade 1020	Carbon steel (plate)	
	ASTM A 516	Carbon steel and alloy boiler plate	5/ 14/
	MIL-S-15083, grade B	Carbon steel (casting)	5/
	ASTM A 108	Carbon steel (bar)	
	MIL-S-22698, grade DH-36, any class	Carbon steel (plate, structural)	
Bearing thrust and vibration reducer shoes	ASTM A 576; ASTM A 675; ASTM A 108	1015-1025 Carbon steel (bar)	
	ASTM A 830, grade 1020	Carbon steel (plate)	
	ASTM A 516	Carbon steel (boiler plate)	5/ 14/
	MIL-S-23284, class 4	Carbon steel (forging)	

See footnotes at end of table.

TABLE III. Materials. - Continued

Part or service	Applicable documents	Material and properties	Remarks 1/2/3/
	MIL-S-24093, class H	Carbon steel (forging)	
	MIL-S-15083, grade B	Carbon steel (casting)	
Bolts, studs, and nuts, (and other screw-thread fasteners)	MIL-S-1222	To suit service	
Leveling links	DOD-F-24669/1	Steel bars and billets (for carburizing)	6/7/
	MIL-S-24093, class B	Alloy steel forging	Magnetic particle inspection required
	ASTM A 686, type W1-10; ASTM A 576 8/	Alloy steel (bar) Carbon steel (bar)	
	MIL-S-5000	Steel bars and forgings	
	MIL-S-5626	Steel bars, rods and forgings	
Piping	MIL-STD-438		See 3.4.1.8
Thrust and vibration reducer shoe supports, including piston inserts when used	ASTM A 686, type W1-10	Tool steels, carbon and carbon vanadium	9/
Thrust shaft and collar	MIL-S-23284, class 1 or 2	Steel forging	10/

See footnotes at end of table.

TABLE III. Materials. - Continued

Part or service	Applicable documents	Material and properties	Remarks 1/ 2/ 3/
Bolts, coupling	ASTM A 675, grade 45	Carbon steel (bar)	
	MIL-S-24093, type I or II, class C	Forged steel	
Base ring, and base ring inserts when used	MIL-S-15083, grade B	Carbon steel (casting)	11/
Feeler pinion (if required)	ASTM A 512, grade 1015; ASTM A 513, grade 1015; ASTM A 519, grade 1015	Carbon steel (tubing)	
Feeler ring lever (if required)	QQ-C-390, alloy no 952	Aluminum bronze (casting)	
Spider (if required)	MIL-S-15083, grade B	Carbon steel (casting)	
Cell plate	MIL-S-24093 class H, type V	Carbon steel (forging)	
Piston	ASTM A 485;	Alloy steel (bar)	12/, see 3.2.10.3.5.2
	ASTM A 686, type W1-10, 8/	Bearing steel	
"O" ring	MIL-R-83248, type I	High temperature rubber	See 3.2.10.3.5.2
Quad ring (if required)	MIL-R-83248, type II	High temperature rubber	See 3.2.10.3.5.2

See footnotes at end of table.

TABLE III. Materials. - Continued

Part or service	Applicable documents	Material and properties	Remarks 1/ 2/ 3/
Backup washer (if required)	MIL-R-8791	Packing, retainer washer hydraulic, tetrafluoroethylene	See 3.2.10.3.5.2
Cylinder	ASTM A 512, grade 1015; ASTM A 513, grade 1015; ASTM A 519, grade 1045	Carbon steel (tubing)	See 3.2.10.3.5.2 13/
	ASTM A 686, type W1-10	Alloy steel (bar)	
Resistance temperature elements	MIL-T-24388, type P	Resistance temperature elements, platinum	
Temperature indicators, direct reading	MIL-I-17244	Bi-metallic	

1/ Ferrous castings shall be furnished in the normalized and heat-treated conditions, as approved. Minimum tempering temperature shall be 100°F above the maximum anticipated operating temperature.

2/ All castings and welded fabrications shall be inspected in accordance with the requirements of MIL-STD-278.

3/ Cast iron or cast aluminum parts shall be prohibited for load bearing applications. Oil deflectors are considered nonload bearings. Nodular, gray, white, austenitic, alloy and malleable cast iron and close grain semi-steel are defined as cast iron. The use of cast iron or cast aluminum parts in nonload bearing applications shall be subject to approval by NAVSEA. Cadmium plating, zinc plating, and plastic plating are not permitted on parts which are exposed to oil during normal operation.

4/ Babbitted faces of thrust shoes and radial bearing: 32 RHR maximum.

5/ Nil-ductility transition temperature shall not exceed plus 10°F as determined by the method described in ASTM E 208. This requirement does not apply to plate thickness less than 5/8 inch or greater than 4 inches. Subject to NAVSEA approval, the use of impact tests may be substituted where there is sufficient statistical data to show correlation between nil-ductility properties and impact values.

6/ Leveling link shoe or base ring pivot surface: 32 RHR maximum - 500-550 Brinell hardness value (0.090 inch minimum depth).

7/ Leveling link surfaces bearing on mating links: 63 RHR maximum - 500-600 Brinell hardness value (0.090 inch minimum depth).
8/ Quality assurance provisions shall be in accordance with ASTM A 686 and the supplementary provisions of ASTM A 541 (after heat treatment).
9/ Thrust or vibration reducer shoe support surface, including piston inserts when used: 32 RHR maximum - 500-600 Brinell hardness value (0.090 inch minimum depth).
10/ Material conforming to class 1 may be used only when approved by the contracting activity. Forward and after face 16 RHR maximum.
11/ Base ring contact areas (or hardened inserts when used): 63 RHR maximum - 500-550 Brinell hardness value (0.090 inch minimum depth).
12/ Piston external cylindrical surface: 8 RHR or less - 500-600 Brinell hardness value (0.090 inch minimum depth).
13/ Cell ring inner cylindrical surface: 8 RHR or less - 350-450 Brinell hardness value (0.090 inch minimum depth).
14/ Ultrasonic examination supplementary requirement. Acceptance or rejection criteria shall be in accordance with the fabrication document.

3.3.2 Mercury prohibition. Mercury shall not be used in the manufacturing or testing of equipment. Material furnished under this specification shall not contain mercury in any form.

3.3.3 Welding and allied processes. Welding and allied processes shall be in accordance with MIL-STD-278.

3.3.4 Screw threads. Screw threads shall be of the unified thread series in accordance with FED-STD-H28.

3.3.5 Locking devices. Nuts on moving components, internal parts, vibration reducer elements, control mechanisms and support structures shall be securely locked. The locking devices shall meet the requirements specified in MIL-T-17600 for such devices used on threaded fasteners in main propulsion steam turbine equipment.

3.4 Supporting system, equipment and instrumentation.

3.4.1 Lubrication. Lubrication system shall be a force-fed external type. A force-fed external lubricating oil system delivers lubricating oil, under positive pressure, from a source external to the bearing housing by a pump and associated piping. Pumps, coolers, strainer, and connecting piping will be supplied by the shipbuilder or propulsion machinery contractor. The necessary connections to the lubricating oil system shall be as specified (see 6.2.1). Capacity and flow requirements shall be determined by the contractor. Bearing shall be designed for use with lubricating oil in accordance with MIL-L-17331 (military symbol 2190TEP).

3.4.1.1 Lubricant inlet temperature. Oil inlet temperature will, under normal operating conditions, be between 100 and 130°F. However, bearing shall be designed for satisfactory startup and unrestricted operation with oil temperature as low as 90°F. Technical manual (see 3.8.2) shall include the required lubricating oil supply temperature for normal and emergency startup conditions.

3.4.1.2 Lubricant discharge temperature. Maximum rise in oil temperature from any bearing under any operating condition shall not exceed 50°F, nor shall the temperature of the discharge oil exceed 180°F when measured by thermometers or resistance temperature elements (RTEs) in the sight-flow indicators or drain lines.

3.4.1.3 RTE temperature limits. Maximum allowable metal temperature, as read by RTE, shall not exceed 250°F in the journal bearing and in the thrust bearing shoes. Alarm settings should initially be set at maximum limits; however, final alarm setting shall be 20°F higher than the maximum value observed during trials (see 3.4.2), but not exceeding 250°F.

3.4.1.4 Operating conditions. Lubrication system requirements determined by contractor (see 3.4.1) shall be designed to lubricate and cool the bearing unit under all conditions of operations specified in 3.2.3.

3.4.1.5 Sight-flow indicator. A sight-flow indicator is an oil tight device incorporating glass panels, which is used to visually check the flow of oil from a bearing. Sight-flow indicators of thrust bearing unit shall be bronze with a 1/4-inch thick glass for flat windows and 5/32-inch thick glass for cylindrical windows (see table III) and shall be attached to bearing cap or cover by bolting or as otherwise approved by NAVSEA. Thrust bearing unit shall be equipped with two sight-flow indicators, one mounted above or near journal bearing for observation of journal bearing flow, and one mounted directly above thrust collar for observation of thrust bearing flow. Oil to sight-flow indicators shall be representative of bearing discharge flow. Sight-flow indicators must not run flooded at any time and shall indicate flow through the bearings whenever lubricating oil is provided to thrust bearing unit at the pressure and flow rate specified by the contractor (see 3.4.1), excepting when lack of oil flow is due to a bearing casualty. Each sight-flow indicator in thrust bearing unit shall incorporate a resistance temperature element and a direct reading thermometer (see 3.4.1.2). Locations of indicators shall be such that the glass panels for monitoring oil flow and the dial of the direct reading thermometer are readily observable by the watchstanders aboard ship.

3.4.1.6 Flow-limiting orifices. Orifices shall be provided in the oil supply to each journal bearing and in the inlet or discharge from each thrust bearing. Orifices shall be removable and shall be designed to prevent external adjustment of oil flow. Orifice opening shall not have sharp edges and orifice diameter shall be no smaller than 0.125 inch.

3.4.1.7 Bearing drain. Bearing housing end seal drains shall be large enough and properly located so as to permit the oil to drain freely to the lubricating oil sump tank external to the thrust bearing unit under all operating conditions (see 3.2.10.3.8). Thrust bearing cavity drain shall be located at the top of the housing to ensure that the cavity will be flooded during operation. A 1/4-inch drain shall be provided at the bottom to drain the cavity when lube oil pumps are shut down. Journal bearing shall have a gravity drain at the bottom of its cavity. Provision shall be made to drain all other cavities within the housing.

3.4.1.8 Pipes, valves and fittings. Pipes, valves and fittings for shipbuilder's lubricating oil system shall be in accordance with MIL-STD-438.

3.4.1.9 Internal oil flow path. Arrangements shall be made to deliver inlet oil to the upper journal bearing shell and to deliver inlet oil to the inner periphery of both ahead and astern thrust shoes, so as to allow oil to flow out radially along the thrust collar.

3.4.1.10 Cleaning. Components of the internal lubricating oil system, including all thrust and journal bearing and bearing housings, shall be thoroughly cleaned in accordance with a NAVSEA approved written procedure prior to the performance of any test. This written procedure covering the equipment, methods and inspection criteria for cleaning the lubricating system shall be prepared by the contractor and must be approved by NAVSEA prior to commencement of cleaning operations.

3.4.1.11 Oil outlet temperature indicators. Temperature indicators shall be in accordance with MIL-I-17244. A local bimetallic indicator shall be required at the thrust and journal bearing lube oil outlets.

3.4.2 Resistance temperature elements. Thrust and journal bearing shall be fitted with electric resistance-type temperature-sensing elements (RTEs). There shall be one operating and one spare RTE installed in the journal bearing, in the astern thrust bearing, and in the ahead thrust bearing. There shall be an RTE in the thrust housing oil discharge directly above the rotating thrust collar located as near to the housing as practical. RTEs shall use platinum temperature elements and shall conform physically and electrically (including wires and installation) to MIL-T-24388.

3.4.2.1 RTE installation in journal bearing. Two RTEs shall be located in the lower half of the journal bearing on, or as close as practicable to, the predicted line of minimum oil film at full power ahead. The location of one of the RTEs shall be at an axial distance of 0.25 times the bearing length from one edge of the bearing and the remaining RTE shall be located at an axial distance of 0.75 times the bearing length from the same edge. The RTEs shall be installed in a radial hole in the bearing shell, with the bottom of the RTEs casing seating on a shoulder in the hole as shown on figure 2. Both RTEs shall be monitored during testing. The RTE with highest reading shall be connected to the ship's temperature monitoring system. The other RTE shall remain as an installed spare. Design shall include an external terminal so that the spare RTE may be put into use without disassembly of the housing.

3.4.2.2 Puddling RTE in bearing. RTEs shall be mounted using the method shown on figure 2. RTEs shall be inserted in the prepared holes. Bearing shell and RTEs shall be heated in an oven to 250 - 300°F and in accordance with QQ-T-390, grade 2 babbitt shall be melted into the surface using a heavy-duty iron or small torch. The added babbitt shall fuse to the plating on the RTE and the babbitt lining the bearing. Babbitt shall be puddled into the cavity until a small excess above the bearing surface is attained. Excess shall be removed by scraping after the shell has cooled to room temperature. The final surface shall not extend above the face of the bearing.

3.4.2.3 RTE connection blocks and wire grooves. Each RTE shall be connected to a connection block such as those shown on figure 3. The RTE lead wires shall be routed to the connection block in grooves such as those shown on figure 4 for journal bearings and figure 5 for thrust shoes. The RTE leads shall be retained in the exposed wire groove by the use of epoxy. Maximum allowable dimensions for RTE connection block holes and wire grooves shall be as specified (see 6.2.1). Special design attention shall be given to allow no sharp edges in way of wire grooves or holes, especially where the radial holes intersect with a peripheral groove.

3.4.2.4 Internal wires and cables. Wiring between bearing connection block and the casing (or bearing pedestal) wall shall be recessed in epoxy-filled grooves, in holes, or in armored sheath. Wiring shall be easily disconnected (mechanically or by melting soft solder) from the bearing connection block and shall penetrate the casing wall through an "AN" connector or equivalent as shown on figure 4.

3.4.2.5 Casing wall "AN" connector. The design shall provide an "AN" or equivalent connector in the casing (or bearing pedestal) wall to connect internal wiring with external wiring. "AN" connectors shall be an oil pressure proof type as specified in MIL-C-5015. Locations of "AN" connectors shall be selected to minimize possibility of damage to connector and wiring. Connection shall be oil tight.

3.4.2.6 RTE installation in thrust bearing shoes. RTEs shall be installed in two shoes of the ahead thrust bearing and two shoes of the astern thrust bearing. In the ahead thrust bearing, the two RTE-equipped shoes shall be located in separate halves of the vibration reducer. Both ahead and astern thrust bearings shall have an RTE-equipped shoe in the bottom and an RTE-equipped shoe in the top geometrical half of the bearing. The RTE in each shoe shall be installed close to the trailing edge and outside diameter of the shoe. The bearing connection block shall be recessed in the edge of the shoe on the pivot line. Figure 5 shows acceptable arrangements for a thrust-shoe RTE.

3.4.2.7 Caution plate. A caution plate shall be permanently affixed to the external top of the bearing cap, warning that the RTE wires to the bearing shall be disconnected before removing the bearing shoes.

3.4.2.8 Bearing monitor. Bearing monitors will be furnished by the shipbuilder in accordance with MIL-T-15377.

3.4.3 Removal of casing covers. Flange jacking or forcing bolts shall be provided to permit ready breaking of joints for examination and repair. Casing covers shall incorporate pad-eyes or other means to permit lifting of the entire unit during installation. These pad-eyes shall also permit lifting of the covers alone.

3.4.4 Bearing yokes and jack bolts. Special tools including bearing yokes and jack bolts shall be provided by the contractor for lifting the thrust shaft when removing the lower half of the journal bearing. Positive means shall be provided to secure the jacking yoke in the stowed position. For the purpose of performing shaft alignment verification, in accordance with NAVSHIPS 250-644-1, provisions shall be made for external hydraulic jacks and load cells for the controlled lifting of the shaft off of the journal bearing. Thrust bearing housing shall be designed to provide adequate space and support structure for the use of hydraulic jacks and load cells as close to the journal bearing as possible.

3.4.5 Rotor jack. The thrust bearing housing ends shall be designed to accommodate hydraulic jacks, to force the shaft forward, without causing permanent deformation or damage to the housing. The jacks shall be sufficiently rated to overcome vibration reducer sump back pressure and static resistance of the main shafting system, including the propulsor and stern bearing staves. The two jack heads shall be interconnected to a common hand pump with a pressure gauge. The jack heads shall be spring return (retracting) when vented. A metal label plate shall be attached to each hydraulic jack head, stamped with the "effective piston area and length of travel". Means shall be provided at the forward end of the thrust bearing housing to support the two hydraulic jack heads (port and starboard), while employing the jacks, without personnel assistance. Slings, spacers, rigging, etc., are prohibited. The hoses shall be of sufficient length to operate the hand pump on the shaft alley deck, either port or starboard side.

3.5 Identification plates. Each bearing unit shall be equipped with an identification plate in accordance with MIL-P-15024 and MIL-P-15024/5, type C. Each identification plate shall be made from rolled brass of commercial composition. The required data shall be stamped on the identification plate in 1/4-inch high capital block letters. Identification plate shall be securely fastened to the pedestal of each bearing unit with machine screws or hardened steel drive screws. Each identification plate shall contain the following information in the format shown:

Propulsion thrust bearing _____

Journal bearing _____

Ship class _____

SSN SSBN _____

Thrust collar diameter _____

Journal bearing diameter _____

NAVSEA drawings _____

Contract or order number _____

Manufactured by _____

Date manufactured _____

3.5.1 Identification marking. Stamping of stressed machine parts will be permitted on the basis that the amount of stamping is held to a minimum and that low-stressed die stamps with a maximum penetration of 0.020 inch are used. Location of this stamping shall be such that it is in no way detrimental to the part from a stress standpoint or interferes with the proper functioning of the part.

3.6 Special tools. The necessity of special tools shall be determined by the contractor and furnished, if so required. Special tools are defined as those tools not listed in the Federal Supply Catalog (copies of this catalog may be consulted in the office of the Defense Contract Administration Services Management Area (DCASMA)).

3.7 Contractor furnished equipment. Equipment, fittings, and accessories shall be furnished with the bearing unit as necessary to meet the requirements of installation, operation and maintenance, and shall include, but not be limited to, the following:

(a) Thrust bearing unit housing.
(b) Journal bearing including oil seals and other items required for proper operation.
(c) Thrust bearing including all shoes, oil seals, and other items required for proper operation.
(d) Thrust shaft with integral thrust collar.
(e) Thrust meter design, if specified (see 6.2.1), complete with working drawings to enable separate acquisition and manufacture.
(f) Vibration reducer (see 3.2.10.3.5) parts, connections and accessories for proper operation.
(g) Connections for the ship's service lubricating and hydraulic oil system.
(h) Orifices (see 3.4.1.6) in oil supply or drain lines.
(i) Identification plates.
(j) Sight-flow indicators with nonmercurial thermometers.
(k) RTEs complete with junction box to measure babbitt and lubricating oil temperature.
(l) Bearing yokes and jack bolts (see 3.4.4).
(m) Casing wall "AN" connectors (see 3.4.2.5).
(n) Special tools (see 3.6).

3.8 Technical data. The contractor shall prepare technical data in accordance with the data ordering documents included in the contract or order (see 6.2.2) and as specified in 3.8.1 through 3.8.3.1.

3.8.1 Drawings. Drawings shall be prepared in accordance with the data ordering documents included in the contract or order (see 6.2.2) and shall be sufficiently complete to permit the manufacture of all parts at a naval shipyard, if it should be required by an emergency. Assembly drawings shall include the names, weights, materials and specifications of all parts. Bearing rated load, speeds, lube oil flow and friction loss shall also be shown on the assembly drawings. Drawings shall specify surface finishes in accordance with ANSI Y14.36.

3.8.2 Manuals. Technical manuals shall be prepared in accordance with the data ordering document included in the contract or order and shall be provided for the main thrust bearing unit (see 6.2.1 and 6.2.2).

3.8.2.1 Operating limits. Prior to ship's sea trials, the contractor shall prepare a list of limitations for equipment operation. The limitations prescribed shall be consistent with the requirements of the specification. These limits shall be incorporated as part of the equipment manual.

3.8.3 Design report. If required (see 6.2.1), a complete design report shall be prepared and developed for the contracting activity in accordance with the data ordering document included in the contract or order (see 6.2.2). The report shall be developed in parts as follows:

(a) During the design phase, contractor shall prepare design justifications for various areas of equipment design and performance (see 6.2.1).
(b) Design documents shall be developed to support acquisition release or manufacturing release.
(c) Design report shall be an updated compilation of the design justifications and not a separate report.
(d) Design report shall be updated as required during the warranty period when design features are changed.

3.8.3.1 Report coverage. Design report shall cover the mechanical characteristics of the bearing unit, including calculation for both steady-state and transient conditions of operation listed in this specification with a discussion of the assumptions and approximations in sufficient detail to permit independent checking. Bibliographies or references shall be listed in the report. The design report shall specifically include, but not be limited to, the following:

(a) Bearing unit design descriptions.
(b) Bearing unit design calculations:
    1. Load calculations.
    2. Bearing life calculations.
    3. Load limitations for inactive vibration reducer (see 3.2.3).
(c) Structural design and calculations:
    1. Stress and vibration calculations.
    2. Low noise design, harmonic charts, and calculations (see 3.2.5).
    3. Shock analysis and calculations (see 3.2.6).
(d) Lubrication calculations for:
    1. Lubrication system capacity and flow rate.
    2. Oil film thickness at rated operating condition.
    3. Oil film temperature at rated operating condition.
    4. Frictional loss data.
(e) Weight and center of gravity calculations.
(f) Definition of terms.
(g) Design changes.
(h) Jacking or forcing bolts, for breaking joints in casing or housing.
(i) Special tools and wrenches, as required.
(j) Junction boxes for external connections to temperature sensing elements in bearing fittings.
(k) Special or unusual fittings.
(l) Repair parts.
(m) Manuals.

(n) Drawings.
(o) Lifting eyes.
(p) Bearing bracket or pedestal; that is, structural support and housing assembly.
(q) Spare parts.
(r) Schedules of planned maintenance.
(s) Additional test recommendations (see 4.6.1).

3.8.4 Deviations and waivers. Requests for deviations and waivers shall be in accordance with the data ordering document included in the contract or order (see 6.2.1 and 6.2.2).

3.8.5 Safety program. The contractor shall prepare, implement, and maintain a system safety program. As a minimum, the program shall include: a system safety program plan, a preliminary hazard analysis and an operating hazard analysis as defined in MIL-STD-882 and in accordance with the data ordering documents included in the contract or order (see 6.2.2).

3.8.6 Installation instructions. The contractor shall prepare installation instructions in accordance with the data ordering document included in the contract or order (see 6.2.2). Instructions shall include lists and descriptions of special tools, devices and instrumentation necessary for the installation and testing during installation. Instructions shall also include handling, test and cleaning procedures, applicable drawings, data sheets, and acceptance criteria. Program for cleanliness shall be in accordance with MIL-STD-419 and shall extend from manufacturing through final shipboard installation and fitting.

3.8.7 Serial numbers and national stock numbers. Contractor shall prepare requests for assignment of serial and National Stock Numbers (NSN), as applicable in accordance with the data ordering document included in the contract or order (see 6.2.2).

4. QUALITY ASSURANCE PROVISIONS

4.1 Responsibility for inspection. Unless otherwise specified in the contract or purchase order, the contractor is responsible for the performance of all inspection requirements as specified herein. Except as otherwise specified in the contract or purchase order, the contractor may use his own or any other facilities suitable for the performance of the inspection requirements specified herein, unless disapproved by the Government. The Government reserves the right to perform any of the inspections set forth in the specification where such inspections are deemed necessary to assure supplies and services conform to prescribed requirements.

4.1.1 Responsibility for compliance. All items must meet all requirements of sections 3 and 5. The inspection set forth in this specification shall become a part of the contractor's overall inspection system or quality program. The absence of any inspection requirements in the specification shall not relieve the contractor of the responsibility of assuring that all products or supplies submitted to the Government for acceptance comply with all requirements of the contract. Sampling in quality conformance does not authorize submission of known defective material, either indicated or actual, nor does it commit the Government to acceptance of defective material.

4.1.2 Inspection system. The contractor shall provide and maintain an inspection system in accordance with the data ordering documents included in the contract or order (see 6.2.2) and in accordance with MIL-Q-9858.

4.2 Classification of inspections. The inspection requirements specified herein are classified as follows:

(a) First article inspection (see 4.3).
(b) Quality conformance inspection (see 4.4).

4.3 First article inspection. First article inspection shall consist of the examinations specified in 4.5.1 and 4.5.2, and tests specified in 4.6.1 through 4.6.1.14.

4.4 Quality conformance inspection. Quality conformance inspection shall consist of the examinations specified in 4.5.1 and 4.5.2, and tests specified in 4.6.2 through 4.6.2.5 for all units.

4.5 Examination.

4.5.1 Examination of materials. Materials used in the manufacture of the bearing units shall be examined to determine conformance to table III, as applicable. Thorough cleanliness of all component parts of the bearing unit shall be ensured.

4.5.2 Visual and dimensional examination. Thrust bearing unit components shall be visually and dimensionally examined to verify compliance with the requirements of this specification as applicable. Items containing visual or dimensional defects shall be rejected unless deviation or waiver is approved (see 3.8.4).

4.6 Tests.

4.6.1 Design verification tests. Each new bearing unit design shall be tested by the Government to verify compliance with this specification. These tests may be performed on a production bearing unit or may be performed on a special test bearing unit. Test bearing unit shall duplicate the design bearing unit configuration. Design of test bearing unit shall be subject to the approval of the contracting activity. Design verification tests may be performed with initial test of the prime propulsion machinery equipment, or in a separate test facility for the thrust bearing unit. Design verification tests shall include, but not be limited to, the tests of 4.6.1.1 through 4.6.1.8. Additional tests, as necessary to verify the adequacy of the design or to confirm unproven design features, shall be recommended by the contractor and performed as part of the design verification tests. Recommendations shall include data to be taken and acceptance criteria (see 4.6.1.9 and 4.6.1.10). Recommendations for additional tests, data to be taken and acceptance criteria shall be made at the time the design is prepared for approval (see 3.8.3) and shall cover the requirements of 3.2.3. The design verification tests specified in 4.6.1.1 through 4.6.1.6 shall be conducted with the vibration reducer in the active condition. Unit load on radial bearing throughout tests 4.6.1.1 through 4.6.1.7 shall be 150 pounds per square inch, based on projected area (see 3.2.10.4.10).

4.6.1.1 Ahead speed runs. The bearing unit shall be operated at design maximum submergence thrust load plus 120 percent of full power ahead propulsive thrust load and at the maximum design ahead shaft speed for 1 hour after temperatures stabilize. In addition, the bearing unit shall be operated at the minimum continuous ahead propulsive thrust load plus the design maximum submergence thrust load and at the minimum sustained shaft speed for 1 hour after temperatures stabilize.

4.6.1.2 Astern speed runs. The bearing unit shall be operated at 120 percent of design full power astern propulsive thrust load plus zero submergence thrust load and at the minimum design astern shaft speed for 1 hour after temperatures stabilize. In addition, the bearing unit shall be operated for 1 hour at the minimum continuous astern propulsive thrust load plus zero submergence thrust load and at the minimum sustained astern shaft speed.

4.6.1.3 Heat soak test. Following at least 8 hours of continuous operation at design maximum submergence thrust load plus 120 percent of design full power ahead propulsive thrust load and at maximum design ahead shaft speed, the bearing unit shall be shut down. Bearing temperatures shall then be recorded until maximum values are reached. Regular ship's temperature indicators and test indicators shall be used to determine maximum temperature values. Upon obtaining maximum babbitt temperature, the bearing unit shall be restarted and operated at the same load and speed for 1 hour after temperatures in the bearing unit have stabilized.

4.6.1.4 Endurance test. Bearing unit shall be operated continuously for 50 hours at each of the following conditions:

(a) Design maximum submergence thrust load plus 120 percent of design full power ahead propulsive thrust load at the maximum design ahead shaft speed.
(b) Design maximum submergence thrust load plus minimum continuous ahead propulsive thrust load at the minimum sustained ahead shaft speed.
(c) Design maximum submergence thrust load plus 120 percent of design full power ahead propulsive thrust load at 125 percent of maximum design ahead shaft speed or 1 rpm less than turbine-trip speed, whichever is lower.

Bearing unit shall also be operated continuously for 10 hours at the maximum design astern speed and 120 percent of design full power astern propulsive thrust load.

4.6.1.5 Full submergence thrust load startup. A series of 20 starts and stops shall be made with the ahead bearing loaded by design maximum submergence thrust from zero ahead shaft speed to the minimum sustained ahead shaft speed. Each start and stop cycle shall consist of a minimum of 10 minutes of operation followed by a minimum of 30 minutes of shutdown. Tests shall be repeated in the astern directions.

4.6.1.6 Low temperature startup. Using procedures specified in the technical manual, bearing unit shall be started with the lowest oil inlet temperature specified in 3.4.1.1 and brought to design maximum submergence thrust load plus 120 percent of full power ahead propulsive thrust load at the maximum design ahead shaft speed.

4.6.1.7 Inactive vibration reducer test. This test shall be conducted at the maximum allowed angular deviation from parallelism between the thrust shaft and the bearing housing axes (see 3.2.3.1). With the vibration reducer inactive (pistons hard-up), bearing unit shall be operated over the ranges of ahead thrust load and ahead shaft speed corresponding to the envelope of allowable speed versus depth operation established for inactive vibration reducer operation (see 3.2.3.2). For this purpose, the thrust bearing unit shall be operated at the ahead thrust loads and ahead shaft speeds that correspond to the designated points in the envelope of allowable speed versus depth (see figure 6), and at least one point between each of these designated points. Operation at each of these test points shall be continuous for at least 10 minutes after temperatures stabilize, except as follows:

(a) At point A, corresponding to minimum sustained ahead shaft speed and maximum allowable depth at that speed, operation shall be continuous for at least 2 hours after temperatures stabilize.
(b) At point C, corresponding to maximum design ahead shaft speed and maximum allowable depth at that speed, operation shall be continuous for at least 10 hours after temperatures stabilize.

4.6.1.8 Hydrostatic test. Thrust bearing unit shall be tested by hydrostatically pressurizing the piston and cell plate assembly with hydraulic oil to 150 percent of the maximum working pressure specified in 6.2.1, as required in 3.2.10.3.5.2. Permanent deformation or other damage of any components of the thrust bearing unit, or a pressure drop greater than 250 pounds per square inch occurring in less than 30 minutes in the vibration reducer shall constitute failure of this test.

4.6.1.9 Data. The following minimum data shall be taken for each test run specified in 4.6.1.1 through 4.6.1.8:

(a) Oil temperature to and from cooler or to and from bearing unit.
(b) Oil flow.
(c) Babbitt temperature of ahead and astern shoes and journal bearing.
(d) Oil seal leakage.
(e) Load.
(f) Speed.
(g) Shaft positions and motions (longitudinal and radial).
(h) Torque (startup and operating).
(i) Shaft/housing deflection.
(j) Direction of rotation.
(k) Film thickness in journal and thrust bearings.
(l) Oil pressure in vibration reducer.

4.6.1.10 Acceptance criteria. In addition to other acceptance criteria specified herein, the following acceptance criteria shall apply to the minimum data specified by 4.6.1.9:

(a) More than one shutdown or a shutdown exceeding 5 minutes duration shall constitute a failure of the test specified herein.
(b) Oil temperature rise through any bearing shall not exceed 50°F.
(c) Bearing discharge oil temperature shall not exceed 180°F.
(d) Babbitt temperature shall not exceed 250°F in journal bearing or in thrust bearing.

(e) Leakage past end seals shall not exceed that specified in 3.2.10.3.8.
(f) Bearing unit shall carry design loads during specified tests without mechanical failure of any kind and without exceeding test temperature limits specified herein.
(g) Bearing unit shall operate at all specified test speeds without mechanical failure and without exceeding test temperature limits specified herein.
(h) Babbitt particles found in the lubricating oil system shall constitute a failure of the tests specified herein.
(i) Bearing unit shall be disassembled at the conclusion of the test period and examined for wear and distortion of components; visible wear (excluding unmeasurable polishing) and measurable distortion of components shall be deemed as failure to conform to this specification.

4.6.1.11 Component shock test. When specified (see 6.2.1), separate component parts of thrust bearing unit that are within the size and weight limitations of the test devices described in MIL-S-901 shall be shock tested in accordance with MIL-S-901. Shock test procedures and acceptance criteria shall be prepared for approval by NAVSEA.

4.6.1.11.1 Corrective action. The contractor shall be responsible for all corrective action necessary to alter components not passing shock tests in order to meet the requirements of MIL-S-901. This may require retesting.

4.6.1.12 Verification of design for shock resistance. Verification of thrust bearing unit design for shock resistance shall be by means of static design analysis, dynamic design analysis or shock test, whichever approach was selected (see 3.2.6). When verification is by means of shock test (see 3.2.6.3), thrust bearing unit shall be shock tested either as an assembly or in subassemblies as necessary to meet then existing size and weight limitations of shock test facility. Shock testing shall be in accordance with MIL-S-901 or as specified (see 6.2.1).

4.6.1.13 Environmental vibration test. When specified (see 6.2.1), the individual component parts of the thrust bearing unit specified in the contract or order shall be tested in accordance with MIL-STD-167-1 for type I - environmental vibration. The simulated environmental vibration test procedure and acceptance criteria shall be approved by NAVSEA. Contractor shall be responsible for all corrective action necessary to alter components not passing the test in order to meet the criteria of MIL-STD-167-1 for type I - environmental vibration. This may require retesting.

4.6.1.14 Special tool demonstration. A demonstration of the adequacy of special tools or fixtures provided by the contractor shall be performed.

4.6.2 Routine tests. Each bearing unit shall be subjected to the tests specified in 4.6.2.1 through 4.6.2.4. Unless otherwise specified herein, routine tests may be performed in conjunction with tests of the prime equipment. In addition, bearing units shall function for all tests required of prime equipment (such as overspeed tests). The tests of 4.6.2.1 through 4.6.2.3 may be omitted

for production bearing units that have been tested in accordance with 4.6.1. The tests of 4.6.2.1 through 4.6.2.3 shall be performed with the vibration reducer in the active condition. Unit load on radial bearing throughout these tests shall be 150 pounds per square inch based on projected area (see 3.2.10.4.10).

4.6.2.1 Forty-five minute preliminary run. Bearing unit shall be operated at design maximum submergence thrust load 120 percent of design full power ahead propulsive thrust load at maximum design ahead speed for 45 minutes to bring the component up to operating temperature. During this period, the general operation of the bearing unit shall be observed and any necessary adjustments shall be made.

4.6.2.2 One-hour continuous test at full design load. Immediately following the 45-minute preliminary test run, the bearing unit shall be again operated at the condition described in 4.6.2.1 for 1 hour. Inability of bearing unit to meet the criteria of 4.6.1.10 shall constitute failure of this test.

4.6.2.3 Reverse operation. The tests of 4.6.2.1 and 4.6.2.2 shall be repeated using opposite direction of rotation at 120 percent of design full power astern propulsive thrust load and maximum design astern shaft speed.

4.6.2.4 Weight. Each bearing unit and all attached parts shall be weighed. Parts not normally attached shall be weighed separately.

4.6.2.5 Babbitt bond test. Babbitt bond testing shall be in accordance with DOD-STD-2183, except that, for thrust shoes, only one shoe from each set of 20 or less shall be bond tested.

4.7 Test procedures and reports. The contractor shall prepare test procedures and reports in accordance with the data ordering documents included in the contract or order (see 6.2.2), and as specified in 4.7.1 through 4.7.5. Procedures for conducting tests, notification of interested personnel, preparation of data, test procedures, and sequence for all tests detailed in this specification and proposed by the contractor shall be as specified (see 6.2.1).

4.7.1 Component laboratory test reports. Laboratory test reports shall be prepared in accordance with the data ordering document included in the contract or order (see 6.2.1) for each component for which material testing is required.

4.7.2 Noise test reports. Test reports shall be prepared in accordance with the data ordering document included in the contract or order (see 6.2.2).

4.7.3 Shock test reports. Shock qualification data, shock test extension action requests (if applicable), and shock test reports shall be prepared as as specified (see 6.2.1) in accordance with the data ordering documents included in the contract or order (see 6.2.2).

4.7.4 Vibration test reports. Test reports shall be prepared in accordance with the data ordering documents included in the contract or order (see 6.2.2).

4.7.5 Reliability reports. Reports on the results of the reliability program (see 3.2.2 and 6.2.1) shall be prepared in accordance with the data ordering document included in the contract or order (see 6.2.2).

4.8 Inspection of packaging. Sample packages and packs, and the inspection of the preservation and packaging, packing and marking for shipment and storage shall be in accordance with the requirements of section 5 and the documents specified therein.

5. PACKAGING

(The packaging requirements specified herein apply only for direct Government acquisition. For the extent of applicability of the packaging requirements of referenced documents listed in section 2, see 6.5.)

5.1 Technical data. Descriptive details of the packaging, packing, and marking scheme and the packaging, packing, and transportation support data shall be prepared in accordance with the data ordering documents included in the contract or order (see 6.2.2).

5.2 Preservation and packaging and packing. Bearing units shall be preserved and packaged and packed level A or C in accordance with MIL-P-2845, as specified (see 6.2.1).

5.3 Marking. In addition to any special marking required by the contract or order (see 6.2.1), interior and exterior shipping containers shall be marked in accordance with MIL-STD-129 and MIL-P-2845.

5.4 Drawings. Drawings shall be packaged and packed in accordance with the data ordering document included in the contract or order (see 6.2.2).

5.5 Manuals. Manuals shall be packaged and packed in accordance with the data ordering document included in the contract or order (see 6.2.2).

5.6 Use of loose-fill materials.

5.6.1 For domestic shipment and energy equipment installation and level C packaging and packing. Unless otherwise approved by the contracting activity, use of loose-fill material for domestic shipment and early equipment installation and level C packaging and packing applications such as cushioning, filler and dunnage is prohibited. When approved, unit packages and containers (interior and exterior) shall be marked and labeled as follows:

"CAUTION

Contents cushioned with loose-fill material. Not to be taken on board ship. Remove and discard loose-fill material before shipboard storage. If required, recushion with cellulosic material bound fiber, fiberboard, or transparent flexible cellular material."

5.6.2 For level A packaging and level A and B packing. Use of loose-fill materials is prohibited for level A packaging and level A and B packing applications such as cushioning, filler and dunnage.

6. NOTES

6.1 Intended use. This specification is intended to be applicable to any submarine propeller shaft thrust bearing unit, where such units combine a hydrodynamic thrust bearing, a vibration reducer and a journal bearing in a common housing and utilize an external force-fed lubricating oil system and an external hydraulic system for the vibration reducer.

6.2 Ordering data.

6.2.1 Acquisition requirements. Acquisition documents should specify the following:

(a) Title, number, and date of this specification.
(b) If first article inspection is required (see 3.1).
(c) Reliability design requirements (see 3.2.2).
(d) Operating conditions (see 3.2.3):
  1. Minimum continuous ahead propulsive thrust.
  2. Minimum sustained ahead shaft speed.
  3. Design full power ahead propulsive thrust.
  4. Maximum design ahead shaft speed.
  5. Minimum continuous astern propulsive thrust.
  6. Minimum sustained astern shaft speed.
  7. Design full power astern propulsive thrust.
  8. Maximum design astern shaft speed.
  9. Design maximum submergence thrust.
  10. Maximum steady journal load.
  11. Change in angle between thrust shaft and housing axes (minutes of arc) in service (see 3.2.3.1).
  12. Dynamic ship motions and various list and trim angles:
    (a) Fore and aft trim (permanent).
    (b) Pitch cycle.
    (c) Roll cycle.
    (d) List.
  13. Shock and vibration loads.
  14. Gyroscopic moment loads.
  15. Ambient operating conditions.
  16. Vibration reducer operating modes (see 3.2.3.2).
  17. Transient thrust load during crash ahead and crash astern maneuvers if other than two times design full power propulsive thrust, and duration if other than 3 seconds.
  18. Any additional thrust and radial loads.
  19. Most severe lubricating oil flow and pressure conditions.
(e) Size, weight and disassembly space limitations (see 3.2.4).
(f) Shock design qualification procedure (see 3.2.6).
(g) Shock design loads and accelerations (see 3.2.6.1).
(h) Life expectancy requirements (see 3.2.7).
(i) Shipbuilder's foundation design (see 3.2.10.1).
(j) Thrust shaft (see 3.2.10.2):
  1. Thrust shaft and couplings.
  2. DDS-243-1.

(k) Vibration reducer system (see 3.2.10.3.5).
  1. Piston/cylinder design configuration.
  2. Openings, ports and bosses to hydraulic system.
  3. Maximum working pressure.
  4. Connections to shipbuilder's control system.
  5. Control system actuator.
(l) Journal bearing oil supply grooves (see 3.2.10.4.2).
(m) Thrust bearing end clearance (see 3.2.10.3.6).
(n) Connections to the shipbuilder's lubrication system (see 3.4.1).
(o) RTE connection block holes and wire groove requirements (see 3.4.2.3).
(p) Thrust meter design (see 3.7).
(q) Technical manual requirements (see 3.8.2).
(r) Design report requirements (see 3.8.3).
(s) Components subject to shock test in accordance with MIL-S-901 (see 4.6.1.11).
(t) Processing of contractor request for deviations and waivers (see 3.8.4).
(u) Shock test procedure and acceptance criteria if other than as specified in MIL-S-901 (see 4.6.1.12).
(v) Components subject to vibration test in accordance with type I of MIL-STD-167-1 (see 4.6.1.13).
(w) Test procedures and reports requirements (see 4.7).
(x) Shock test reports requirements (see 4.7.3).
(y) Reliability program report requirements (see 4.7.5).
(z) Packaging requirements (see 5.2).
(aa) Special marking required (see 5.3).

6.2.2 Data requirements. When this specification is used in an acquisition and data are required to be delivered, the data requirements identified below shall be developed as specified by an approved Data Item Description (DD Form 1664) and delivered in accordance with the approved Contract Data Requirements List (CDRL), incorporated into the contract. When the provisions of DoD Far Supplement, Part 27, Sub-Part 27.410-6 (DD Form 1423) are invoked and the DD Form 1423 is not used, the data specified below shall be delivered by the contractor in accordance with the contract or purchase order requirements. Deliverable data required by this specification are cited in the following paragraphs.

Paragraph no.	Data requirement title	Applicable DID no.	Option
3.2.2	Reliability program plan	DI-R-7079	---
3.2.2	Failure mode, effects, and criticality analysis report	DI-R-7085	---
3.2.7	Repairable items list	DI-V-7005	List of parts with at least 20,000 hour life
3.8.1, 5.1 and 5.4	Drawings, engineering and associated lists	DI-E-7031	Level 3 Design activity designation-contractor Drawing number-contractor Parts list required
3.8.1	Imaged aperture/tabulating cards	DI-E-20477	---
3.8.2	Technical manual manuscript copy	DI-M-2042	MIL-M-15071, type I
3.8.2 and 5.2	Manual, technical, preliminary	DI-M-2043	MIL-M-15071, type I
3.8.2	Manual, technical, standard	DI-M-2044	MIL-M-15071, type I
3.8.3	Package, design data (initial and final)	UDI-R-26071	---
3.8.4	Engineering change proposals (ECP's) and requests for deviations and waivers (long form)	DI-E-2037	---
3.8.5	System safety program plan	DI-H-7047	---
3.8.6 and 3.8.7	Instructions equipment installation	UDI-E-21344	---
4.1.2	Inspection system program plan	DI-R-4803	---
4.6.1.9.2	Report, shock dynamic design analysis	UDI-E-23122	---
4.6.1.9.2	Report, mathematical model dynamic shock analysis	UDI-E-23118	---
4.7	Procedures, test	UDI-T-23732	MIL-Q-9858
4.7	Reports, test	DI-T-2072	---
4.7.1	Reports, manufacturer's test	UDI-T-23797	---
4.7.2	Report, component shop noise tests	UDI-T-23764	---
4.7.3	Reports, equipment shock test	UDI-T-23753	---
4.7.3	Data sheet, shock qualification	UDI-T-23761	---
4.7.3	Request, shock test extension action	UDI-T-23763	---
4.7.4	Report, vibration testing	UDI-T-23762	---
4.7.5	Reliability status report	DI-R-7080	---
5.1	Preservation and packing data	DI-L-7135	---

(Data item descriptions related to this specification, and identified in section 6 will be approved and listed as such in DoD 5010.12-L., Vol. I, AMSDL. Copies of data item descriptions required by the contractors in connection with specific acquisition functions should be obtained from the Naval Publications and Forms Center or as directed by the contracting officer.)

6.2.2.1 The data requirements of 6.2.2 and any task in sections 3, 4, or 5 of this specification required to be performed to meet a data requirement may be waived by the contracting/acquisition activity upon certification by the offeror that identical data were submitted by the offeror and accepted by the Government under a previous contract for identical item acquired to this specification. This does not apply to specific data which may be required for each contract regardless of whether an identical item has been supplied previously (for example, test reports).

6.2.2.2 Serial numbers. When serial numbers are required, the following clause should be included in the ordering document:

> "Serial number assignment should be requested by letter from the Commander, Naval Sea Systems Command (Attn: Technical Data and Configuration Management Branch), Washington, DC 20362-5101, with a copy to the cognizant Defense Contract Administration Services Plant Representative Office and NAVSEA Code _____ (the office at the Naval Sea Systems Command Headquarters having responsibility for the items being procured)."

The request for serial number assignment should contain the following minimum information:

(a) Officially assigned item name.
(b) Officially assigned type designation.
(c) Officially assigned model number.
(d) Top drawing number and LD (List of Drawings) number.
(e) Exact quantity to be delivered under the contract including preproduction samples required by the contractor.
(f) Contract number.
(g) National Stock Number.
(h) NAVSEA cognizant office code listed above.

6.3 First article. When a first article inspection is required, the items should be a first article sample, or it may be a standard production item from the contractor's current inventory as specified in 4.1.2. The contracting officer should include specific instructions in acquisition documents regarding arrangements for examinations, approval of first article test results and disposition of first articles. Invitations for bids should provide that the Government reserves the right to waive the requirements for samples for first article inspection to those bidders offering a product which has been previously acquired or tested by the Government, and that bidders offering such products, who wish to rely on such production or test, must furnish evidence with the bid that prior Government approval is presently appropriate for the pending contract.

6.4 Provisioning. Provisioning Technical Documentation (PTD), spare parts, and repair parts should be furnished as specified in the contract.

6.4.1 When ordering spare parts or repair parts for the equipment covered by this specification, the contract should state that such spare parts and repair parts should meet the same requirements and quality assurance provisions as the parts used in the manufacture of the equipment. Packaging for such parts should also be specified.

6.5 Sub-contracted material and parts. The packaging requirements of referenced documents listed in section 2 do not apply when material and parts are acquired by the contractor for incorporation into the equipment and lose their separate identity when the equipment is shipped.

6.6 Subject term (key word) listing.

Hydrodynamic thrust bearing
Thrust bearing unit
Vibration reducer

Preparing activity:
Navy - SH
(Project 3130-N603)

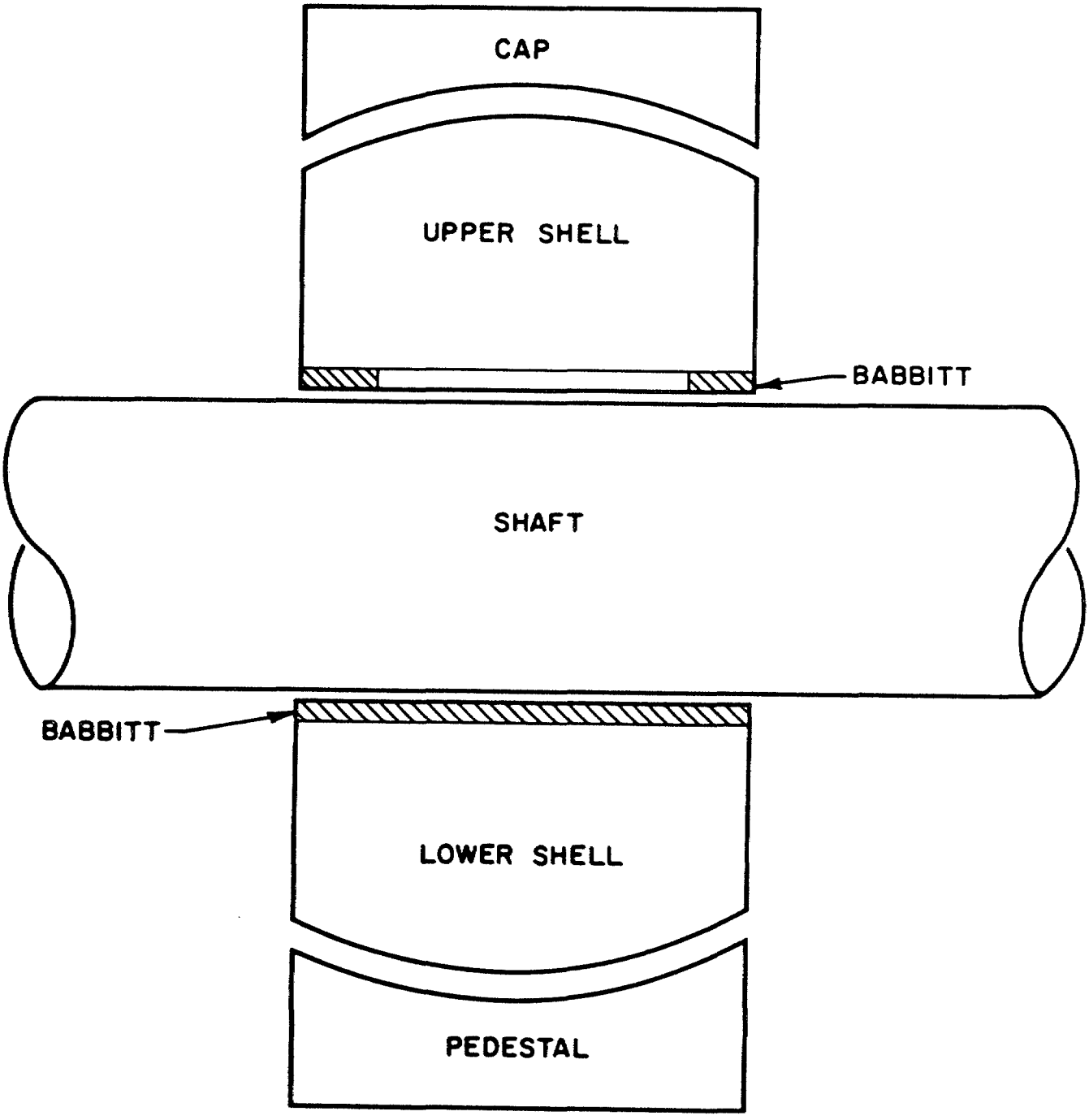

SH 131989

FIGURE 1. Thick-walled babbitted shell bearing nomenclature.

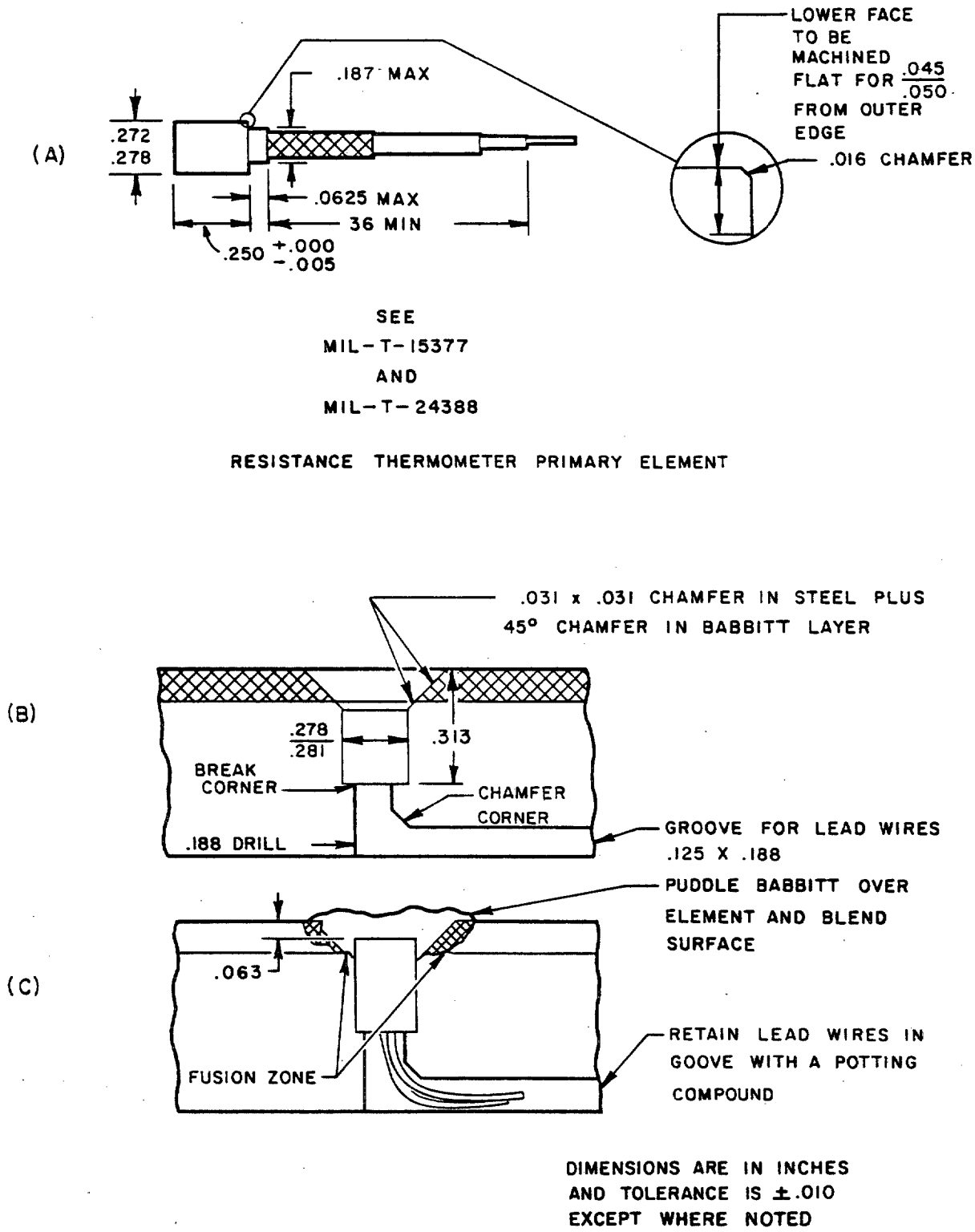

SH 131990

FIGURE 2. Typical RTE installation in a bearing.

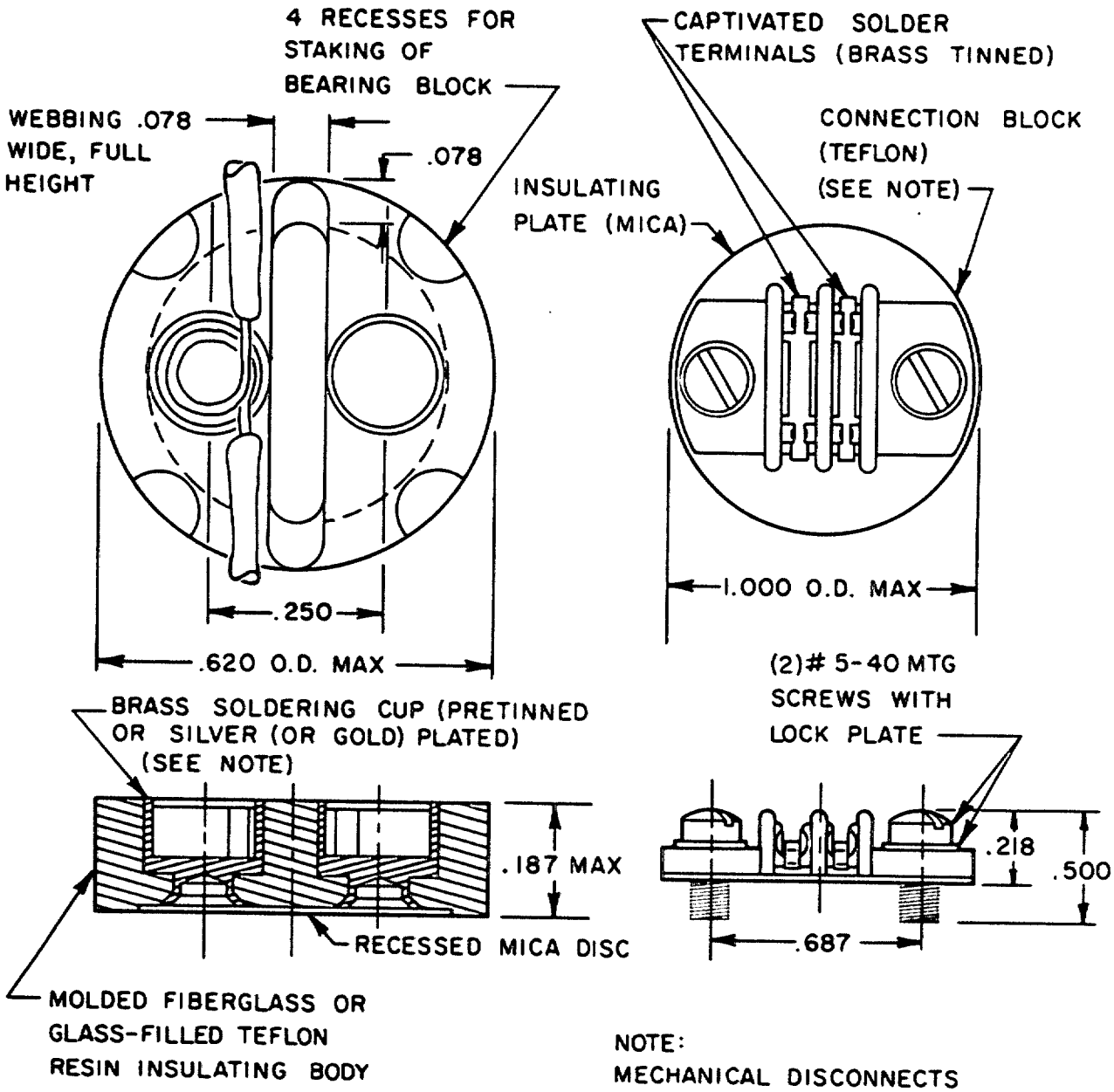

NOTE:
MECHANICAL DISCONNECTS OF AN APPROVED DESIGN ARE PREFERRED TO THE SOLDERED CONNECTIONS SHOWN.

DIMENSIONS ARE IN INCHES AND TOLERANCE IS ±.010 EXCEPT WHERE NOTED.

SH 131991

FIGURE 3. RTE connection block.

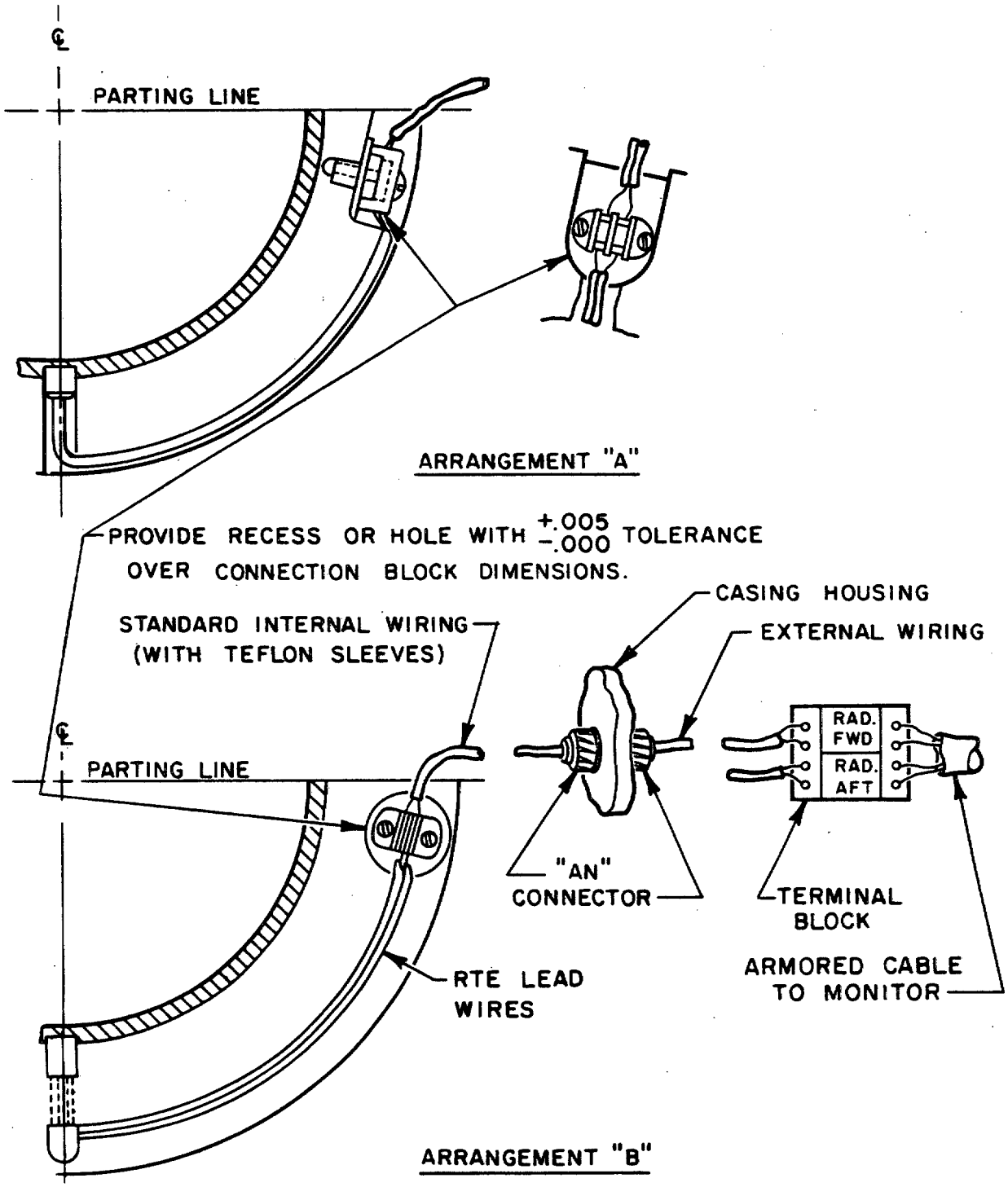

SH 131992

FIGURE 4. RTE installation in journal bearings.

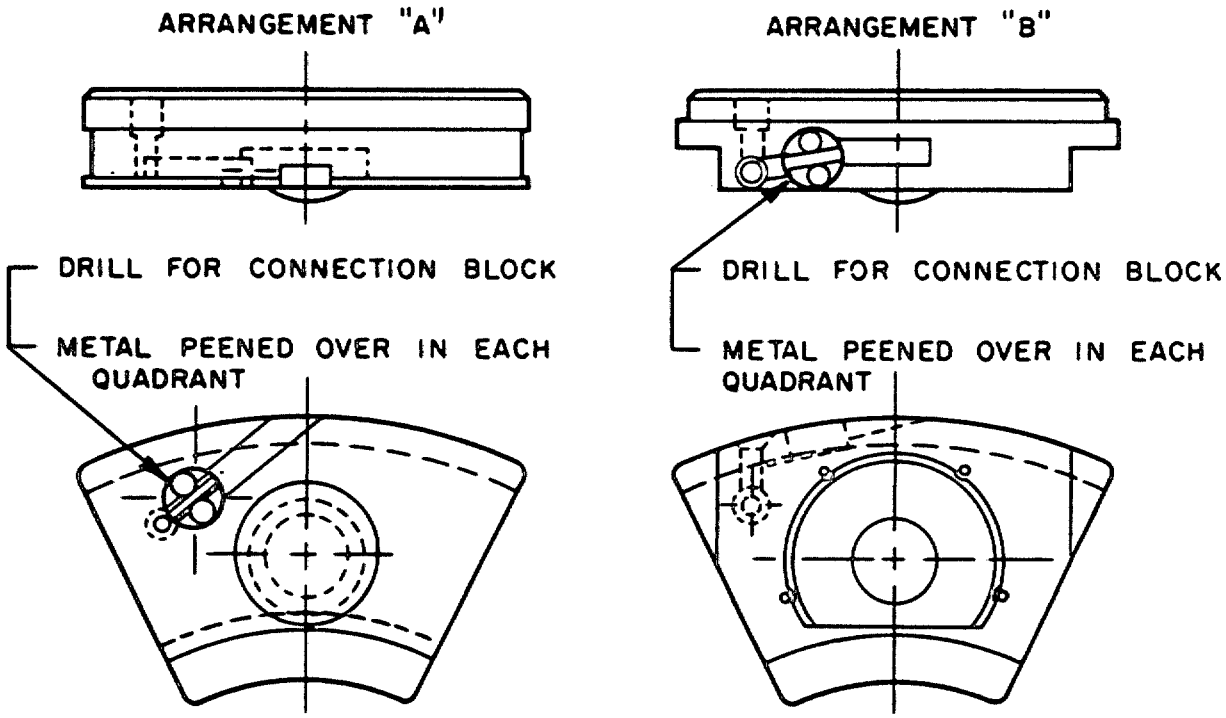

NOTES TO ARRANGEMENT "A"

1. RTE INSERTED FROM BABBITTED FACE OF SHOE, (SEE FIGURE 2(C))
2. CONNECTION BLOCK INSERTED FROM BACK OF SHOE WITH CIRCUMFERENCE TANGENT TO RTE LEAD-WIRE HOLE.
3. BACK OF SHOE GROOVED (SEE FIGURE 2(B)) BETWEEN CONNECTION BLOCK AND EDGE OF SHOE AT PIVOT LINE.

NOTES TO ARRANGEMENT "B"

1. RTE INSERTED FROM BABBITTED FACE OF SHOE, (SEE FIGURE 2(C))
2. CONNECTION BLOCK INSERTED RADIALLY INTO EDGE OF SHOE.
3. RTE LEAD WIRES SHALL BE RUN TO CONNECTION BLOCK THROUGH A DRILLED PASSAGEWAY OR GROOVES ON BACK OR EDGE (OR COMBINATION OF SAME).
4. RADIAL EDGE OF SHOE GROOVED BETWEEN CONNECTION BLOCK AND EDGE OF SHOE AT PIVOT LINE.

SH 131993

FIGURE 5. RTE installation in thrust shoes.

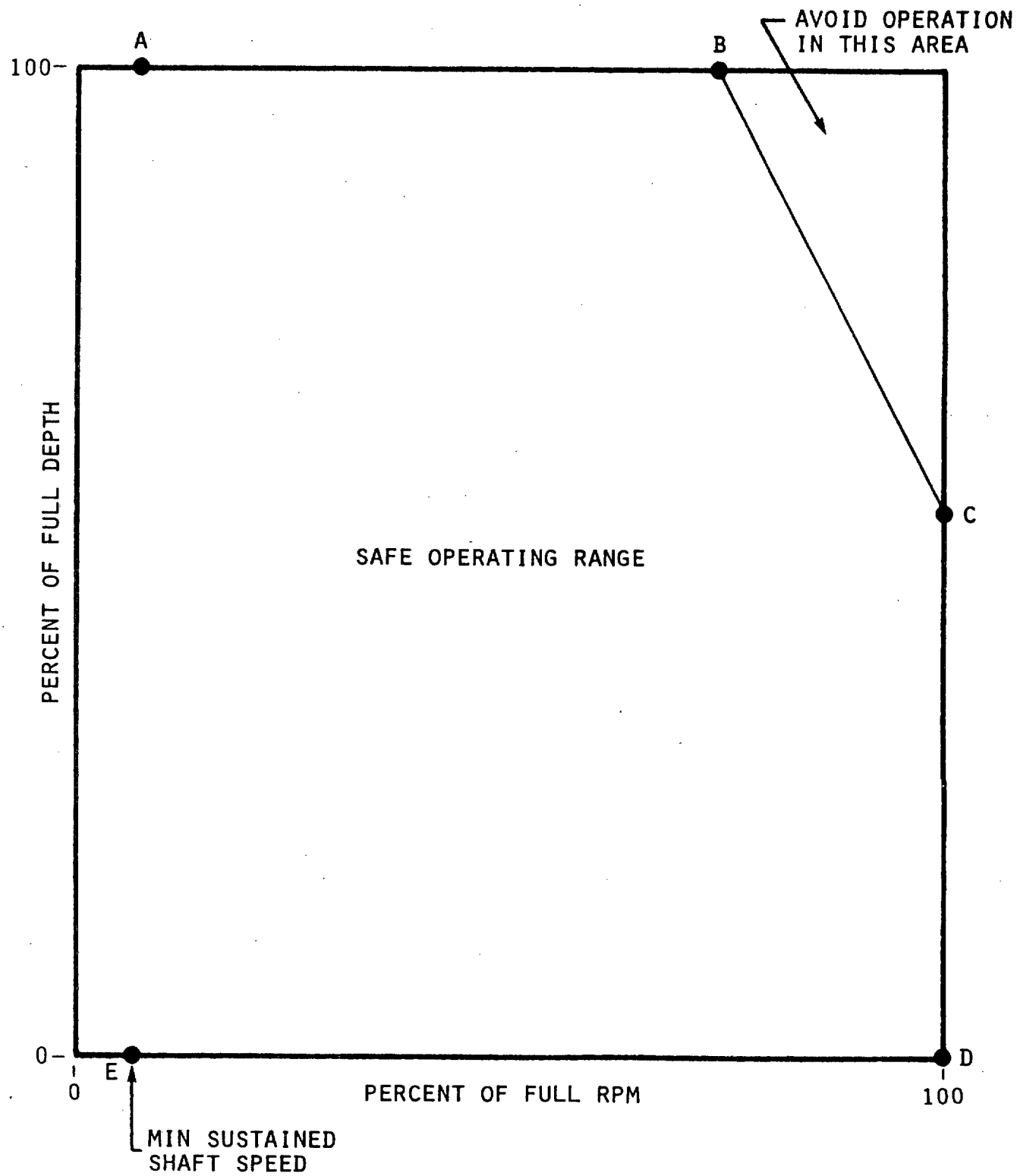

SH 131994

FIGURE 6. Operating limitations on ahead face of main propulsion thrust bearing in the hard up condition (no oil under the pistons).

INDEX

INDEX - Continued

INDEX - Continued

INDEX - Continued

INDEX - Continued

(TO DETACH THIS FORM, CUT ALONG THIS LINE.)

STANDARDIZATION DOCUMENT IMPROVEMENT PROPOSAL

(See Instructions – Reverse Side)

1. DOCUMENT NUMBER
DOD-B-24668(SH)

2. DOCUMENT TITLE

3a. NAME OF SUBMITTING ORGANIZATION

b. ADDRESS *(Street, City, State, ZIP Code)*

4. TYPE OF ORGANIZATION *(Mark one)*

- ☐ VENDOR
- ☐ USER
- ☐ MANUFACTURER
- ☐ OTHER *(Specify)*: _____

5. PROBLEM AREAS

a. Paragraph Number and Wording:

b. Recommended Wording:

c. Reason/Rationale for Recommendation:

6. REMARKS

7a. NAME OF SUBMITTER *(Last, First, MI)* – Optional

b. WORK TELEPHONE NUMBER *(Include Area Code)* – Optional

c. MAILING ADDRESS *(Street, City, State, ZIP Code)* – Optional

8. DATE OF SUBMISSION *(YYMMDD)*

DD FORM 82 MAR 1426

PREVIOUS EDITION IS OBSOLETE.