Downloaded from http://www.everyspec.com

DATA ITEM DESCRIPTION

Title: Transportability Report

Number: DI-PACK-80880C
AMSC Number: A7357
DTIC Applicable: No
Office of Primary Responsibility: MT
Applicable Forms:
Approval: 1 November 2003
Limitation:
GIDEP Applicable: No

Use/Relationship: The Transportability Report will be used to obtain essential information from contractors for evaluating the transportation limitations and restrictions of Department of Defense equipment that qualifies as a transportability problem item.

a. Information acquired through this report will include dimensional and weight characteristics of the item or system, test results of physical transportability testing performed on the equipment, and when available, computer aided design (CAD) models of the equipment to support structural, kinematic, and dynamic analyses of the transportation environment, and results of any CAD structural, kinematic, or dynamic analyses performed by the contractor.

b. This Data Item Description (DID) contains information on the format and data content for the work task described by 4.5 of **MIL-STD-1366D** (or equivalent paragraph in later versions of this standard) and is applicable to acquisition of military systems and equipment that qualify as a transportability problem item. This DID can be tailored to program requirements with approval of the service transportability agent. The applicable service transportability agents are as follows:

Army – MTMCTEA, ATTN: MTTE-DPE, 720 Thimble Shoals Blvd., Suite 130, Newport News, VA 23606, dpemail@tea.army.mil.

Air Force - HQ AFMC/LGRD, 4375 Chidlaw Road, Suite 6, Wright-Patterson AFB, OH 45433-5006, gregory.holevar@wpafb.af.mil.

Navy – Naval Transportation Support Center, Code 02A, 1837 Morris Street, Bldg Z-133, Norfolk, VA 23511-3492, jo.policastro@navy.mil.

Marine Corps - CG, MARCORSYSCOM, ATTN: GTES/Transportability, 2200 Lester Street, Quantico, VA 22134-6050.

c. During acquisition programs this DID should be applied at least 90 days prior to each major milestone decision review.

d. This DID supersedes DI-PACK-80880B.

Downloaded from http://www.everyspec.com

Requirements:

1. Reference documents. The applicable issue of documents cited herein, including their approval dates and dates of any applicable amendments, notices, and revisions, shall be cited in the current issue of the DODISS at the time of the solicitation.

2. Format. The Transportability Report shall be in the format shown in paragraph 3 of this document.

3. Content. The Transportability Report shall include the following:

(1) Title. TRANSPORTABILITY REPORT.

(2) Points of contact: State contractor name, location, phone number, and email address. State the name, title, organization, and department of individual preparing the transportability report.

(3) Date of Transportability report.

(4) Official nomenclature.

(5) National stock number (if known).

(6) Line Item Number (if known).

(7) Brief description.

(a) Intended use.

(b) List whether commercial, modified commercial, non-developmental, developmental, reprocurement, or modified equipment.

(c) Specify type of military units that will use or transport the item.

(d) State whether for worldwide use or for specific theater of operations. List specific theater of operations in priority order.

(e) Planned quantity. State item acquisition quantity by fiscal year.

(8) Transportation Data.

(a) Hazardous materials. For each item classified as hazardous material, state:

1. The class of hazardous material as specified in: *Title 49, Code of Federal Regulations* (49 CFR), Parts 100-179, *Transportation;* **AFMAN 24-204(I)**, *Preparing Hazardous Materials for*

Downloaded from http://www.everyspec.com

Military Air Shipments; International Maritime Organization (IMO), *International Maritime Dangerous Good (IMDG) Code*; or the United Nation's *Recommendation on the Transportation of Dangerous Goods*.

2. DOT proper shipping name.

3. Net explosive weight (DOT class 1, division 1.1, 1.2, or 1.3 explosives only).

4. Venting requirements.

5. Grounding requirements.

6. Any other than above.

(b) Sectionalization and Reduction. State if the item can be sectionalized, folded, or reduced for transport and provide the following information:

1. Time and personnel required to disassemble at port of embarkation and reassemble at port of debarkation (Time: in work and clock hours).

2. Special equipment, tools or software required for sectionalization or reduction (for example, cranes, forklifts, wrecker trucks, pallets, nitrogen, hand tools, calibration equipment, fixtures, or height management system software). All of the data that is required by this DID for the operational equipment, must also be provided for each component(s) or subassembly that exceeds the criteria for a "transportability problem item" (see paragraph 4.4 of **MIL-STD-1366D** or equivalent paragraph in later versions of this standard). For each component(s) or subassembly not exceeding the criteria for a "transportability problem item," provide only the length, width, height and weight of each sectionalized component.

(c) Modeling and simulation (when available). Provide computer aided design (CAD) models of the equipment to support structural, kinematic, and dynamic analyses of the item's transportation environment, or provide results of CAD transportation analyses performed by the contractor.

(d) Transportability tests. A copy of test report(s) (or test plan and scheduled date(s) if not completed) shall be included as a part of this report, when available.

(e) Speed requirements. State self-propelled or towed speed limits.

(f) Shipping data plate. A paper copy of shipping data plate that will be secured to the vehicle shall be included with this report, when available (see **MIL-STD-209**).

(g) Crew Size. State number of soldiers required for a crew.

Downloaded from http://www.everyspec.com

(h) Photographs. Provide electronic or hardcopy photographs of equipment, when available.

(i) Dimensional and Weight Data sets. A data set shall be provided for all configurations of the equipment. As a minimum, one set of data shall be provided for the fully operational configuration (including gross weight, fuel, lubricants, water, crew, Basic Issue Item (BII) equipment, and so forth), and one set of data shall be provided for the shipping (reduced or sectionalized) configuration. If there are different reduced shipping configurations for various transportation assets and modes, a different set of data shall be provided for each different shipping configuration.

1. Weight. State curb weight and maximum gross weight, and any other intermediate weights for special configurations required to meet specific transport requirements (i.e. fixed-wing air transport or helicopter transport).

2. Drawings (required if CAD models are not provided (see (c)). Indicate top, plan, side, and end view configurations on each drawing. Hardcopy or electronic files are acceptable. Drawings must include all data as shown in Figures 1, 2, or 3, as applicable.

(j) Lifting and tiedown provisions.

1. State the number and strength (yield and ultimate) of lifting (including aerial recovery), equipment tiedown, multipurpose, cargo tiedown, and supplemental air transport tiedown provisions for the item and major components removed for transport.

2. Provide the dimensional location of the lifting, equipment tiedown, multipurpose, and supplemental air transport tiedown provisions (with respect to the CG) as shown in Figure 4.

3. Provide the dimensional location of the cargo tiedown provisions as shown in Figure 5.

4. Provide the dimensions A, B, C_L, C_S, D, and E, for each lifting, equipment tiedown, multipurpose, and front, rear and center (if required) cargo tiedown provisions, as shown in Figure 6.

5. Provide the dimensions A and B for the cargo tiedown provisions, as shown in Figure 7.

6. Provide the opening size of the supplemental air transport tiedown provisions.

7. Identify the location of hardpoint lifting provisions provided for aerial recovery (if required).

Downloaded from http://www.everyspec.com

(k) Projections. State the dimensions and locations of any significant projections (for example, environmental control units, ladders, protruding tiedown provisions, antennas, shelters, and so forth). See Figures 1, 2, and 3.

(l) Additional information required for **wheeled** vehicles.

1. Weight ratings. Specify the gross vehicle weight rating (GVWR).

2. Tires. State the number, size(s), load rating(s), locations, and inflation pressure of tires.

3. Axle loads. State the axle load, for each axle, for the following configurations:

a. Vehicle at curb weight.

b. Vehicle at maximum gross weight. (For cargo vehicles, assume a uniform load on the cargo bed).

c. Intermediate weights for special configurations required to meet specific transport requirements (i.e. fixed-wing air transport or helicopter transport).

4. Maximum axle load ratings. State maximum axle load ratings for each axle.

5. Kingpin/lunette and fifth wheel/pintle ratings and loads (as applicable).

a. State the kingpin/lunette and fifth wheel/pintle ratings and actual loads.

b. State distance between first axle and kingpin/lunette, and height of kingpin/lunette.

c. State distance between last axle and fifth wheel/pintle, and height of fifth wheel/pintle.

d. For trailers, state the required prime movers. For truck-tractors, state the trailers to be towed.

6. Landing legs (as applicable).

a. State rating for landing legs.

b. State axle loads and landing leg load, when trailer is resting on landing legs. State distance between landing legs and kingpin/lunette.

c. Provide dimensions of landing legs as shown in Figure 8.

Downloaded from http://www.everyspec.com

7. Suspension type and ratings. State type and load ratings for each suspension.

8. Crest Angle. State the angle (in degrees) connecting two horizontal surfaces that the vehicle can pass (crest) without interference (see Figure 9). Assume the ramp length is equal to or greater than the wheel base of the vehicle.

9. Tire footprint area. State the locations and dimensions of all tire footprint areas actually in contact with the ground in the fully loaded condition, and at the tire inflation pressure specified in paragraph 3.(l).2. (see Figure 10).

10. Axle tracking width. State the tracking width of each axle (see Figure 11).

11. Vehicle turning diameter. State the vehicle turning diameter for the following:

a. Wall-to-wall.

b. Curb-to-curb.

(m) Additional information required for **tracked** vehicles.

1. Road Wheels. State number of road wheels and road wheel axle spacing.

2. Track pads. State the area and number of track shoe pads actually in contact with the ground (see Figure 12).

3. Ground Pressure. Specify the ground pressure created by the heaviest pad (pounds per square inch). State the weight supported by each road wheel (hard surface, level ground).

(n) Additional information required for **skid-mounted** equipment.

1. Number of skids.

2. Dimensions of all skid areas actually in contact with the ground.

3. Ground Pressure. Specify ground pressure created by each skid (pounds per square inch).

Downloaded from http://www.everyspec.com

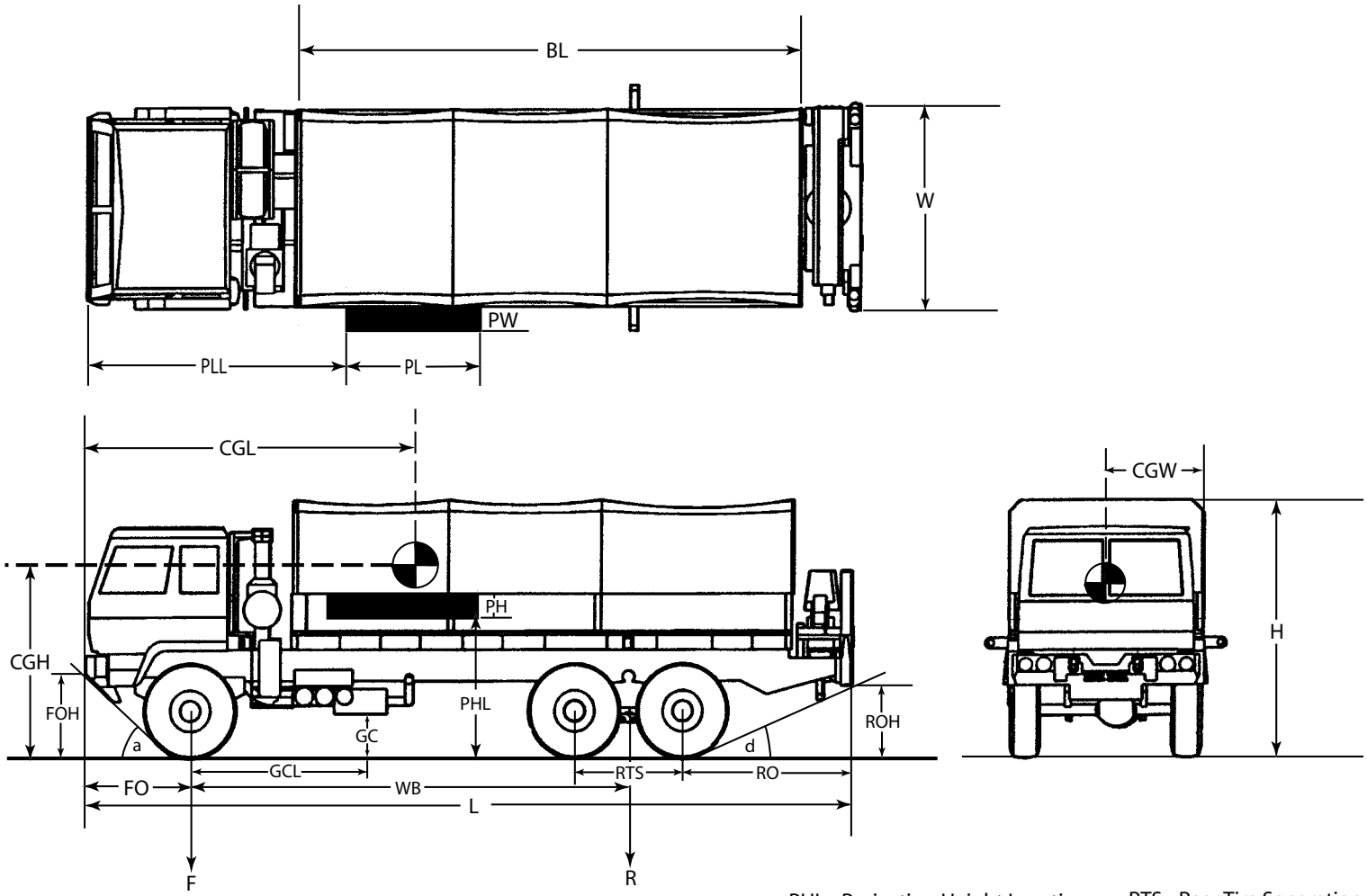

a - Angle of Approach
BL - Body Length
CGH - Center of Gravity Height
CGL - Center of Gravity Length
CGW - Center of Gravity Width
d - Angle of Departure
F - Front Axle Load

FO - Front Overhang
FOH - Front Overhang Height
H - Height
GC - Ground Clearance
GCL - Ground Clearance Location
L - Length
PH - Projection Height

PHL - Projection Height Location
PL - Projection Length
PLL - Projection Length Location
PW - Projection Width
R - Rear Axle Load
RO - Rear Overhang
ROH - Rear Overhang Height

RTS - Rear Tire Separation
W - Overall Width
WB - Wheel Base

Figure 1 - Wheeled Vehicle Dimensions

Downloaded from http://www.everyspec.com

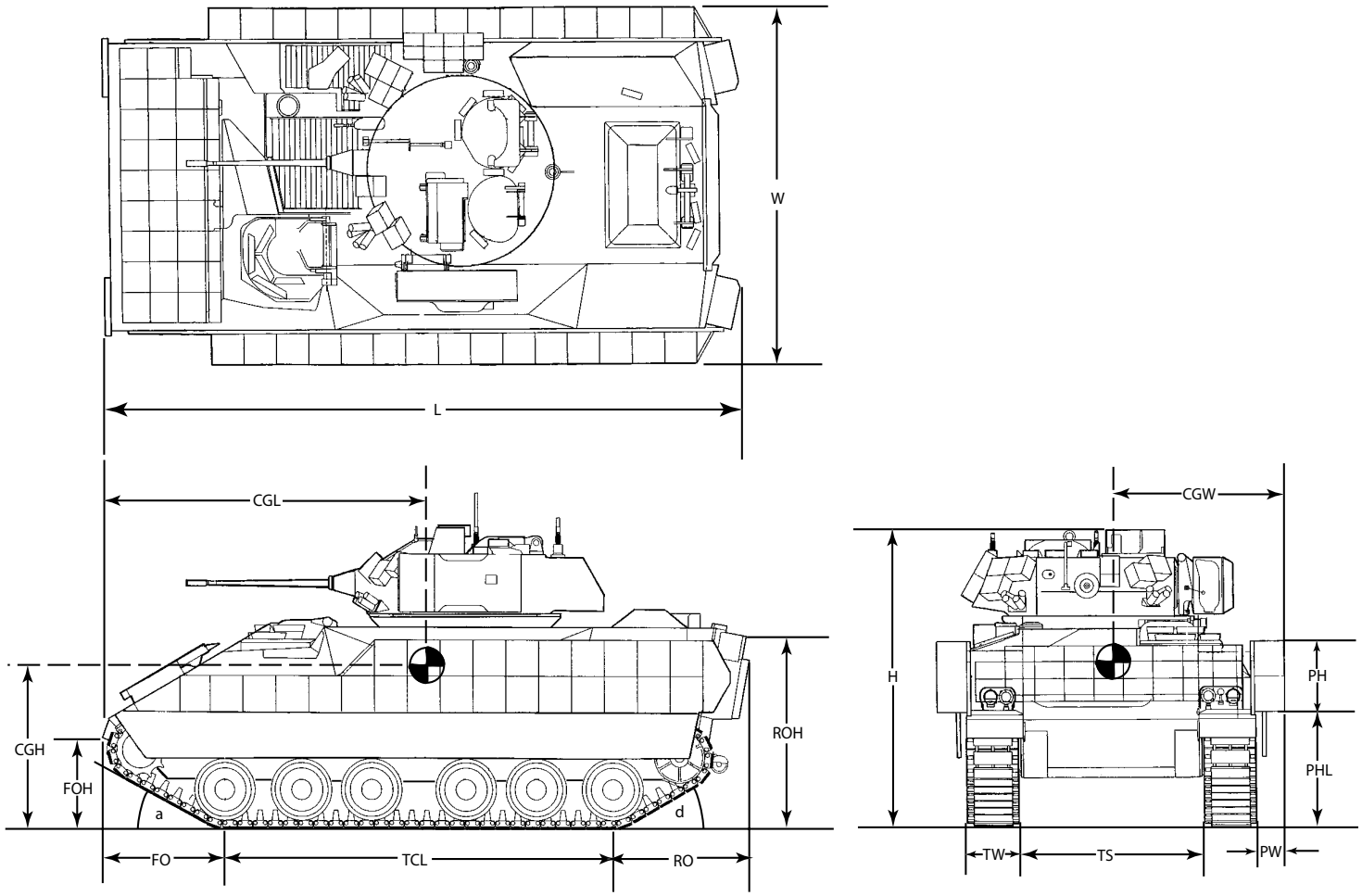

a - Angle of Approach
CGH - Center of Gravity Height
CGL - Center of Gravity Length
CGW - Center of Gravity Width
d - Angle of Departure
EH - Edge Height

FO - Front Overhang
FOH - Front Overhang Height
H - Height
L - Length
PH - Projection Height
PHL - Projection Height Location

PW - Projection Width
RO - Rear Overhang
ROH - Rear Overhang Height
TCL - Track Center Line
TS - Track Separation
TW - Track Width
W - Width

Figure 2 - Tracked Vehicle Dimensions

Downloaded from http://www.everyspec.com

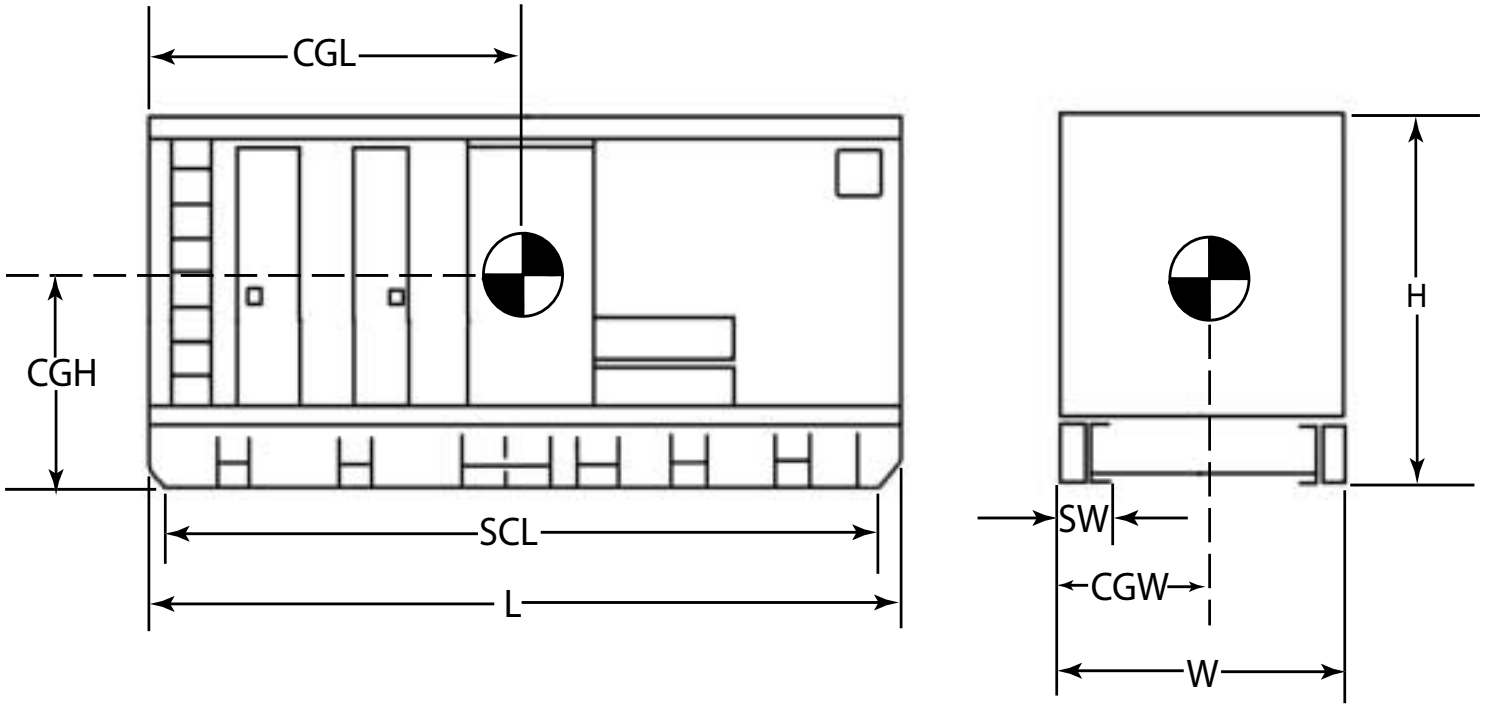

CGH - Center of Gravity Height
CGL - Center of Gravity Length
CGW - Center of Gravity Width
H - Height
L - Length
SCL - Skid Chamber Length
SW - Skid Width
W - Width

Figure 3 - Skid-Mounted Item Dimensions

Downloaded from http://www.everyspec.com

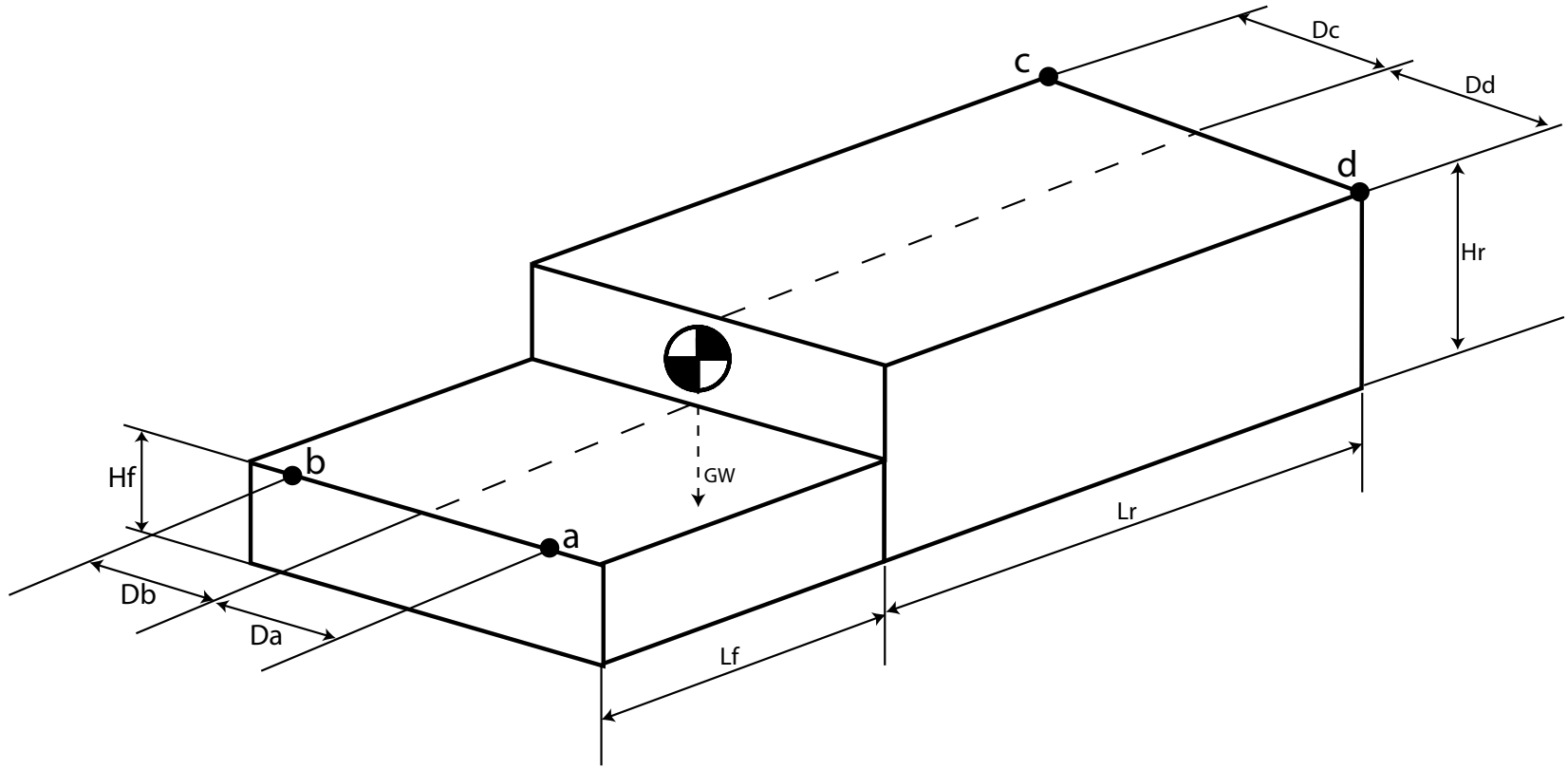

Da - Lateral distance from provision a to the CG
Db - Lateral distance from provision b to the CG
Dc - Lateral distance from provision c to the CG
Dd - Lateral distance from provision d to the CG
GW - Gross Weight

Hf - Height of front provisions
Hr - Height of rear provisions
Lf - Longitudinal distance between front provisions and the CG
Lr - Longitudinal distance between the rear provisions and the CG

Figure 4 - Dimensions Defining the Location of the Lifting and Tiedown Provisions

Downloaded from http://www.everyspec.com

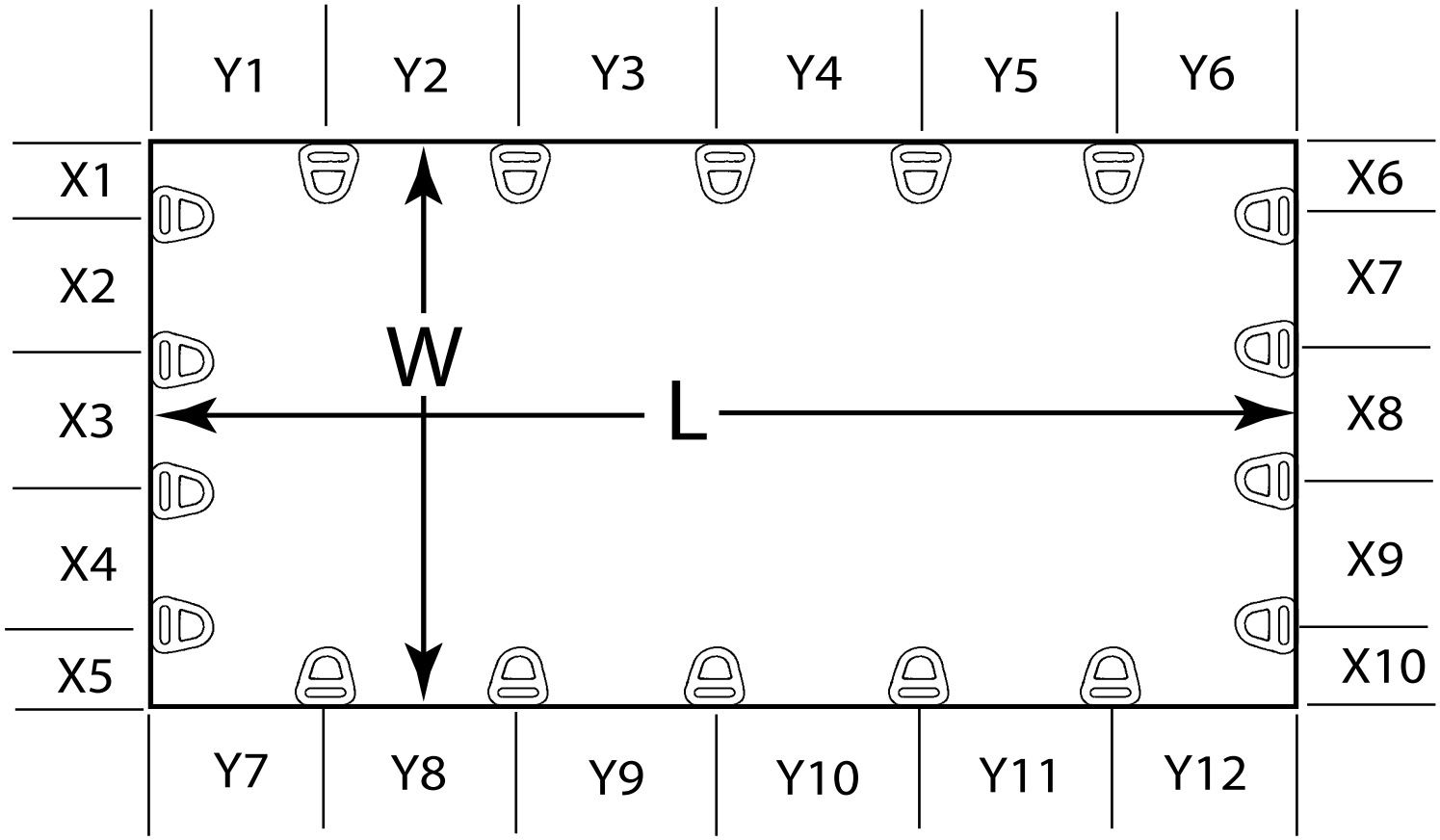

X1-10 - Distance between provisions on front and rear of cargo bed
Y1-12 - Distance between provisions on left and right side of cargo bed
W - Width of cargo bed
L - Length of cargo bed

Figure 5 - Dimensions to Determine Location of Cargo Tiedown Provisions

Downloaded from http://www.everyspec.com

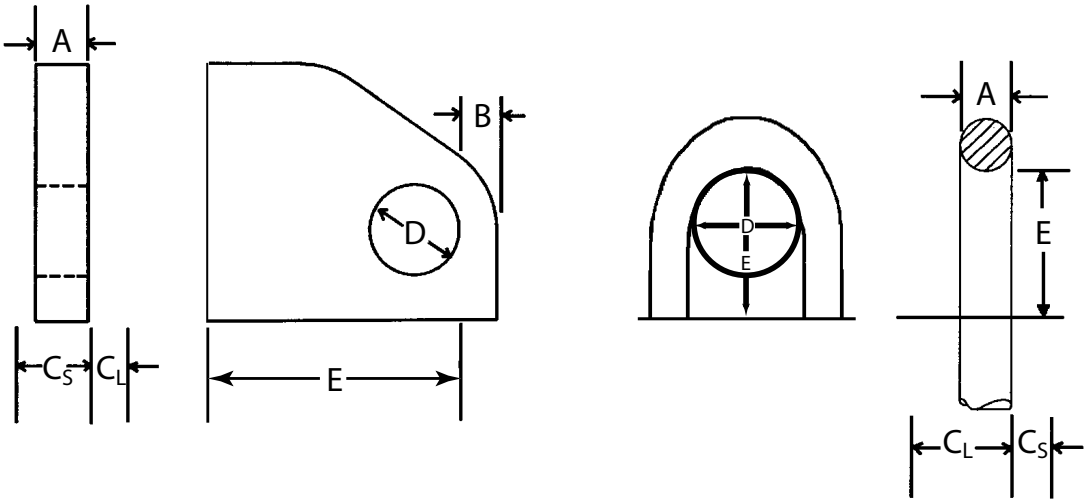

C_L and C_s are the dimensions between one side of the provision and the nearest interference or obstruction. Either side of the provision may be used as the datum from which to measure C_L and C_s.

E is the dimension between the outside edge of D and the nearest interference or obstruction.

Figure 6 - Lifting and Tiedown Dimensions

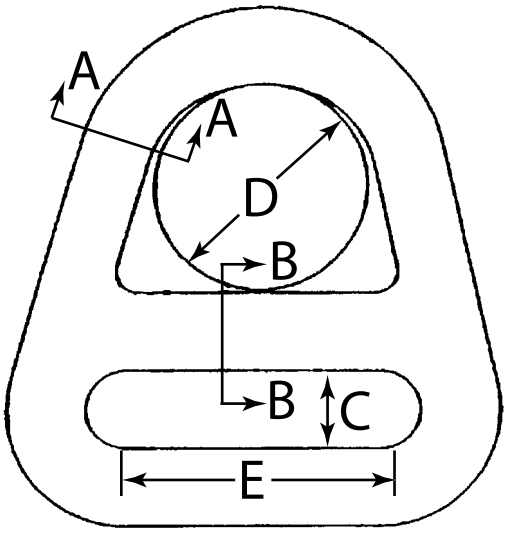

Figure 7 - Cargo Tiedown Dimensions

Downloaded from http://www.everyspec.com

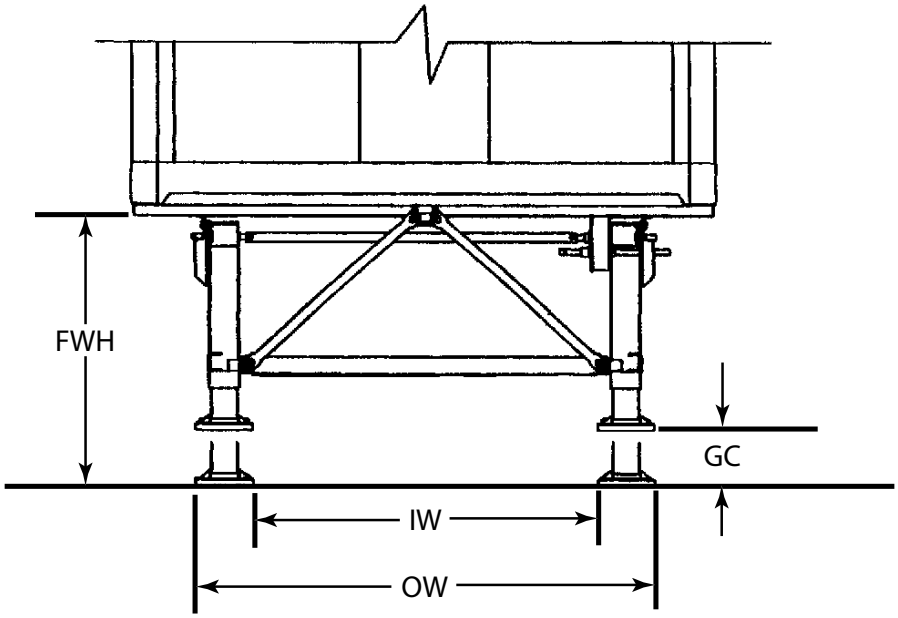

FWH - Fifth wheel height
GC - Ground clearance
IW - Inside width
OW - Outside width
L - Length of landing leg pad
W - Width of landing leg pad

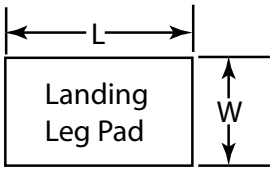

Figure 8 - Landing Leg Dimensions

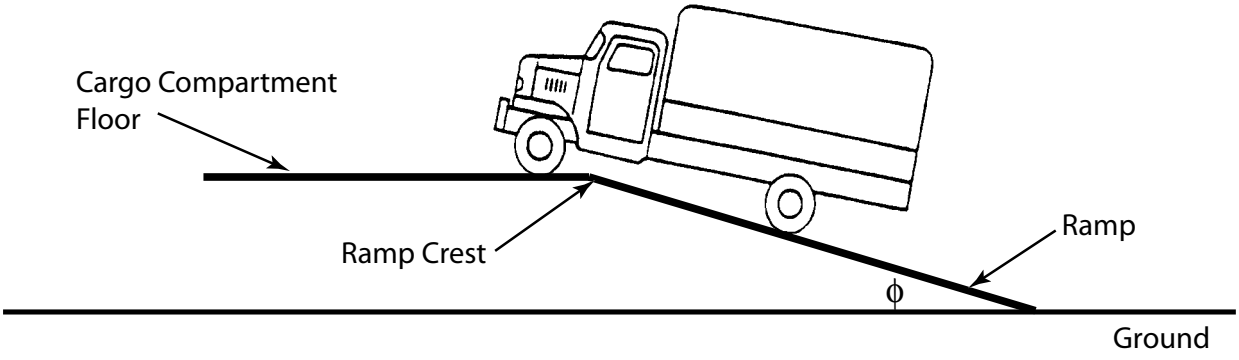

Figure 9 - Ramp Crest Angle

Downloaded from http://www.everyspec.com

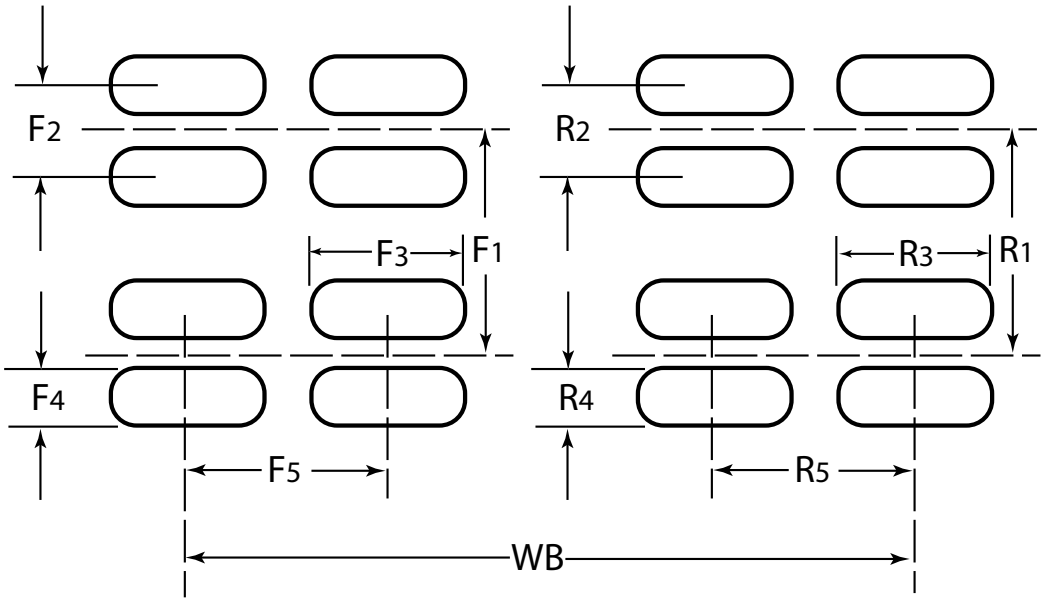

WB - Wheel Base

Figure 10 - Tire Footprint Area

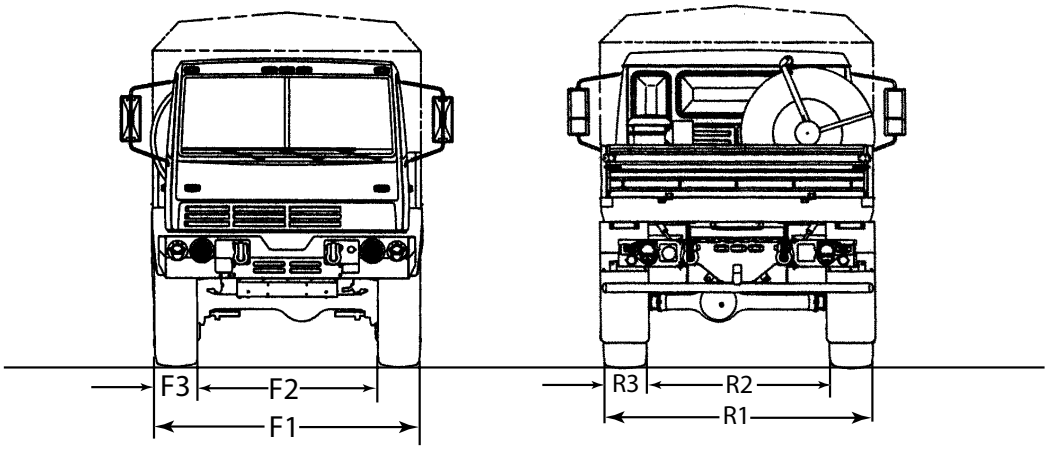

F1 - Outside distance between tires
F2 - Inside distance between tires
F3 - Front tire width (to include tire bulge in transport configuration)
R1 - Outside distance between tires
R2 - Inside distance between tires
R3 - Rear tire width (to include tire bulge in transport configuration)

Figure 11 - Axle Tracking Width

Downloaded from http://www.everyspec.com

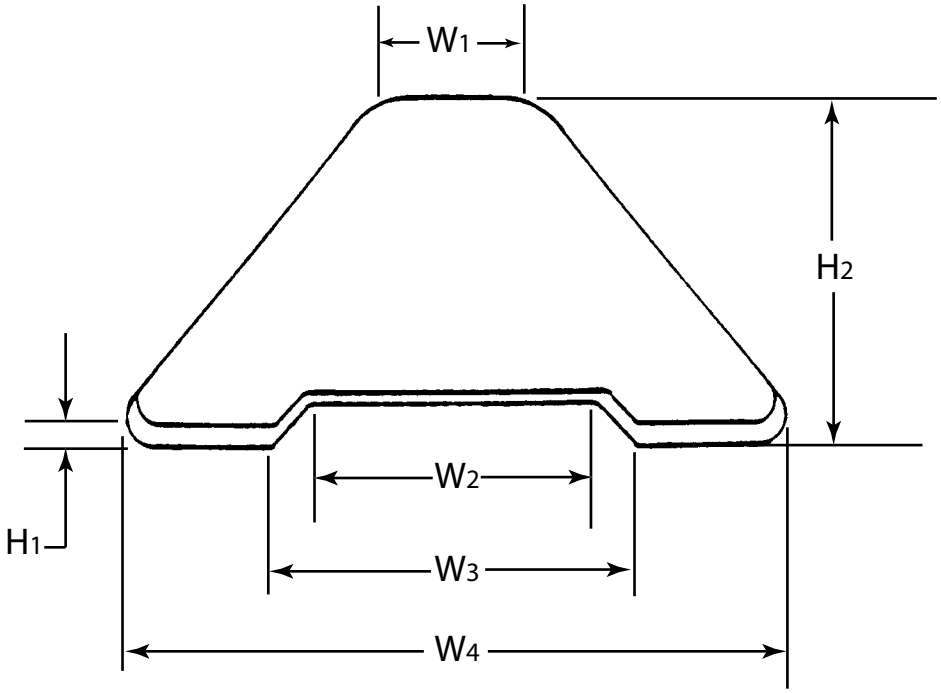

Figure 12 - Track Shoe Pad Dimensions (footprint data)