INCH-POUND

A-A-59736
22 January 2003
SUPERSEDING
PPP-B-1672D
August 5, 1996

COMMERCIAL ITEM DESCRIPTION

BOXES, SHIPPING, REUSABLE WITH CUSHIONING

The General Services Administration has authorized the use of this commercial item description as a replacement for PPP-B-1672 by all federal agencies.

1. SCOPE.

This commercial item description covers shipping boxes (fast packs) consisting of a fiberboard box with appropriate cushioning components. These boxes are intended for use as standard, exterior, reusable packing media in the packaging, preservation, handling, shipment, and storage of serviceable and repairable items as prescribed by cognizant packaging activities. Type I packs may be used for items such as meters, gauges, and instruments. Type II packs may be used for items which are essentially flat (6 mm (1/4 inch) to 65 mm (2-1/2 inches)) such as circuit boards, electronic modules, and tubes. Type III packs may be used for black-box type items, such as receiver-transmitters, amplifiers, power supply units and electronic indicators. Type IV packs may be used for electrical-electronic items generally having a small cross section relative to length, such as control generators, amplifiers, voltmeters, protection panels, transformers, and regulators. Additional information regarding weight limits and fragility ranges of applicable items may be found in MIL-STD-2073-1 and as referenced in Technical Order (TO) 00-85B-3.

Beneficial comments, recommendations, additions, deletions, clarifications, etc. and any data that may improve this document should be sent to: ASC/ENOI, 2530 Loop Road West, Wright-Patterson AFB OH 45433-7101 or Engineering.Standards@wpafb.af.mil.

FSC 8115

2. CLASSIFICATION.

2.1 Types, styles, and sizes.

The cushioned boxes (Fast Packs) covered by this commercial item description are classified by the following types, styles, and sizes as specified (see 7.2). Sizes are in millimeters (inches).

Type I - Vertical star packs (see figure 1).

Style A - Regular slotted carton (RSC)

Style B - Double cover container (DBLCC)

Style C - Modified double cover container (Modified DBLCC)

Sizes - 155 x 155 x 255 (6 x 6 x 10)
205 x 205 x 305 (8 x 8 x 12)
255 x 255 x 305 (10 x 10 x 12)
305 x 305 x 355 (12 x 12 x 14)
305 x 305 x 460 (12 x 12 x 18)
355 x 355 x 405 (14 x 14 x 16)

Type II, Style D - Modified triple slide (modified TS) (convoluted foam) folding packs (see figure 2).

Sizes - 155 x 125 x 65 (6 x 5 x 2-1/2)
155 x 125 x 90 (6 x 5 x 3-1/2)
230 x 155 x 65 (9 x 6 x 2-1/2)
230 x 155 x 90 (9 x 6 x 3-1/2)
230 x 155 x 115 (9 x 6 x 4-1/2)
255 x 255 x 90 (10 x 10 x 3-1/2)
305 x 205 x 65 (12 x 8 x 2-1/2)
305 x 205 x 90 (12 x 8 x 3-1/2)
330 x 330 x 90 (13 x 13 x 3-1/2)
405 x 405 x 90 (16 x 16 x 3-1/2)
460 x 305 x 65 (18 x 12 x 2-1/2)
460 x 305 x 90 (18 x 12 x 3-1/2)
610 x 405 x 90 (24 x 16 x 3-1/2)

Type II, Style E – One-piece folder (OPF) (see figure 2).

Sizes 180 x 125 x 30 (7 x 5 x 1-1/4)
180 x 125 x 60 (7 x 5 x 2-1/4)
230 x 155 x 30 (9 x 6 x 1-1/4)
230 x 155 x 60 (9 x 6 x 2-1/4)

255 x 255 x 75 (10 x 10 x 3)
305 x 205 x 30 (12 x 8 x 1-1/4)
305 x 205 x 60 (12 x 8 x 2-1/4)
330 x 330 x 60 (13 x 13 x 2-1/4)
405 x 405 x 60 (16 x 16 x 2-1/4)
460 x 305 x 30 (18 x 12 x 1-1/4)
460 x 305 x 60 (18 x 12 x 2-1/4)
610 x 405 x 65 (24 x 16 x 2-1/2)

Type III, Style G - Full telescoping encapsulated (FTC) (see figure 3).

Sizes - 510 x 355 x 230 (20 x 14 x 9)
610 x 355 x 355 (24 x 14 x 14)
610 x 460 x 405 (24 x 18 x 16)
635 x 355 x 355 (25 x 14 x 14)
660 x 230 x 230 (26 x 9 x 9)
760 x 405 x 355 (30 x 16 x 14)
815 x 305 x 355 (32 x 12 x 14)
815 x 460 x 405 (32 x 18 x 16)
865 x 610 x 460 (34 x 24 x 18)
760 x 685 x 355 (30 x 27 x 14)
760 x 760 x 230 (30 x 30 x 9)
1000 x 1000 x 230 (40 x 40 x 9)

Type IV, Style B - Double cover (DBLCC) horizontal star container (see figure 4)

Sizes - 510 x 355 x 355 (20 x 14 x 14)
560 x 405 x 405 (22 x 16 x 16)

3. SALIENT CHARACTERISTICS

3.1 Terminology.

General definitions for packaging and distribution environments are found in ASTM D996.

3.2 Materials.

3.2.1 Boxes.

Material for all boxes shall conform to ASTM D4727/D4727M, type CF, class WR. Boxes of type I, type III (except for box sizes requiring a variety DW, material grade V13c on figure 3), and type IV packs shall be a variety SW, material grade V3c. Type II packs shall be a variety SW, material grade W5c.

3.2.2 Cushioning.

Cushioning material for type I, III, and IV packs shall meet the first article requirements of MIL-PRF-26514 except that use of the color coding requirement shall be optional and the material shall conform to type I, class 2, grade C. Cushioning for type II, style D packs shall conform to type III, class 2, grade A, B, or C. Cushioning for type II, style E packs shall conform to PPP-C-795, Class 2.

3.2.2.1 Convolutions.

All convolutions for cushioning shall have dimensions and tolerances as specified on figure 5. Each convoluted cushioning component shall have peaks with a uniform height of K (see figure 5).

3.2.2.2 Laminations.

Deep or long body cushions (such as the star shaped die-cut bodies) shall be made from a whole piece or shall be built up to the specified dimension by means of laminations. All lamination pads used in a cushioning system shall be composed of material having the same cushioning characteristics. The minimum nominal thickness of lamination pads shall be 50 mm (2 inches). Thicker lamination pads may be used to minimize the number of laminations. Convoluted cushioning shall be made from a whole piece or shall be built up to the specified thickness by lamination of a nominal 50 mm (2 inches) or thicker pad, provided that the convoluted section shall be integral with a minimum 25 mm (1 inch) thick base section (see figure 5). Type II convoluted cushioning shall be cut from a single piece of foam and shall have a minimum base thickness of 13 mm (1/2 inch).

3.2.2.3 Bonding of laminations.

As a minimum, laminations shall be spot bonded with a maximum of 50% coverage, using adhesive specified in 3.2.5 sufficiently to maintain true alignment and integrity of the built-up cushioning configuration. The built-up body of type I packs may be assembled without bonding the laminations together. On type III, style G, apply adhesive to only the top half of the end and side pieces. On type IV, style B only, bond the top cushion to the container lid.

3.2.2.4 Anti-static property.

The cushioning for type II packs shall be uniformly impregnated with an electrostatic agent. For style D the static dissipative material shall conform to all requirements for the specified type as defined in MIL-PRF-26514 when tested as specified in 5.5. For style E the static dissipative material shall conform to all requirements as defined in the static dissipative properties test (see PPP-C-795).

3.2.2.5 Electrostatic decay time.

The average decay time, when tested as specified in 5.5.1, shall be less than 2.0 seconds

3.2.3 Tape.

Tape shall be 50 mm (2 inches) in width and shall conform to ASTM D5330/D5330M or specified tapes in ASTM D5118/5118M.

CUSHIONED BOX DATA

ALL DIMENSIONS ARE IN MILLIMETERS (INCHES)

BOX SIZE (ID) L × W × D	DETAIL No. 1					DETAIL No. 2 L × W × D
	L	W	D	di	do	
155×155×255 (6×6×10)	155 (6)	155 (6)	155 (6)	38 (1.5)	115 (4.5)	155×155×50 (6×6×2)
205×205×305 (8×8×12)	205 (8)	205 (8)	205 (8)	65 (2.5)	155 (6)	205×205×50 (8×8×2)
255×255×305 (10×10×12)	255 (10)	255 (10)	155 (6)	90 (3.5)	180 (7)	255×255×75 (10×10×3)
305×305×355 (12×12×14)	305 (12)	305 (12)	205 (8)	115 (4.5)	205 (8)	305×305×75 (12×12×3)
305×305×460 (12×12×18)	305 (12)	305 (12)	255 (10)	115 (4.5)	205 (8)	305×305×100 (12×12×4)
355×355×405 (14×14×16)	355 (14)	355 (14)	255 (10)	140 (5.5)	255 (10)	355×355×75 (14×14×3)

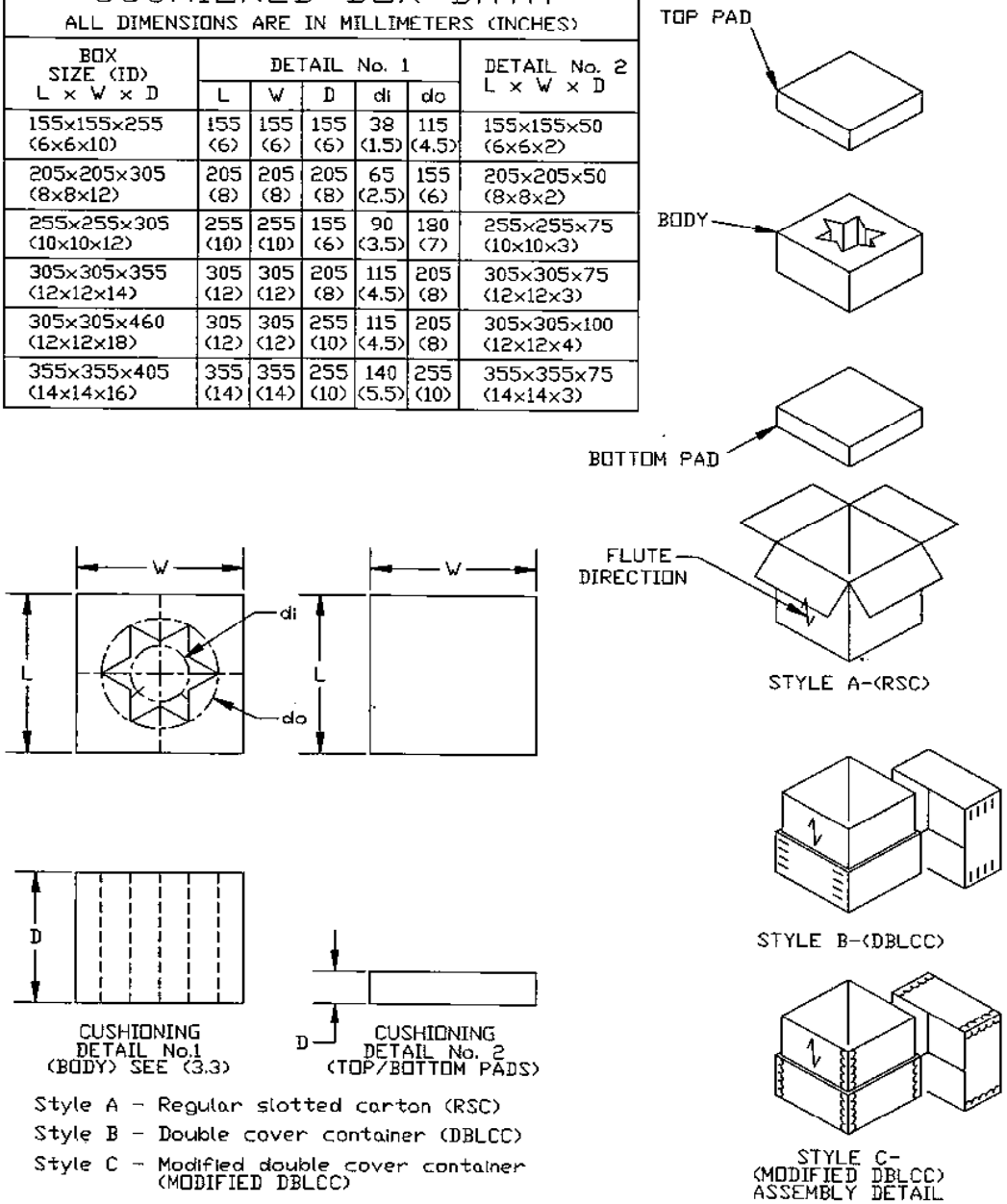

Style A – Regular slotted carton (RSC)

Style B – Double cover container (DBLCC)

Style C – Modified double cover container (MODIFIED DBLCC)

FIGURE 1. Type I, styles A, B, and C.

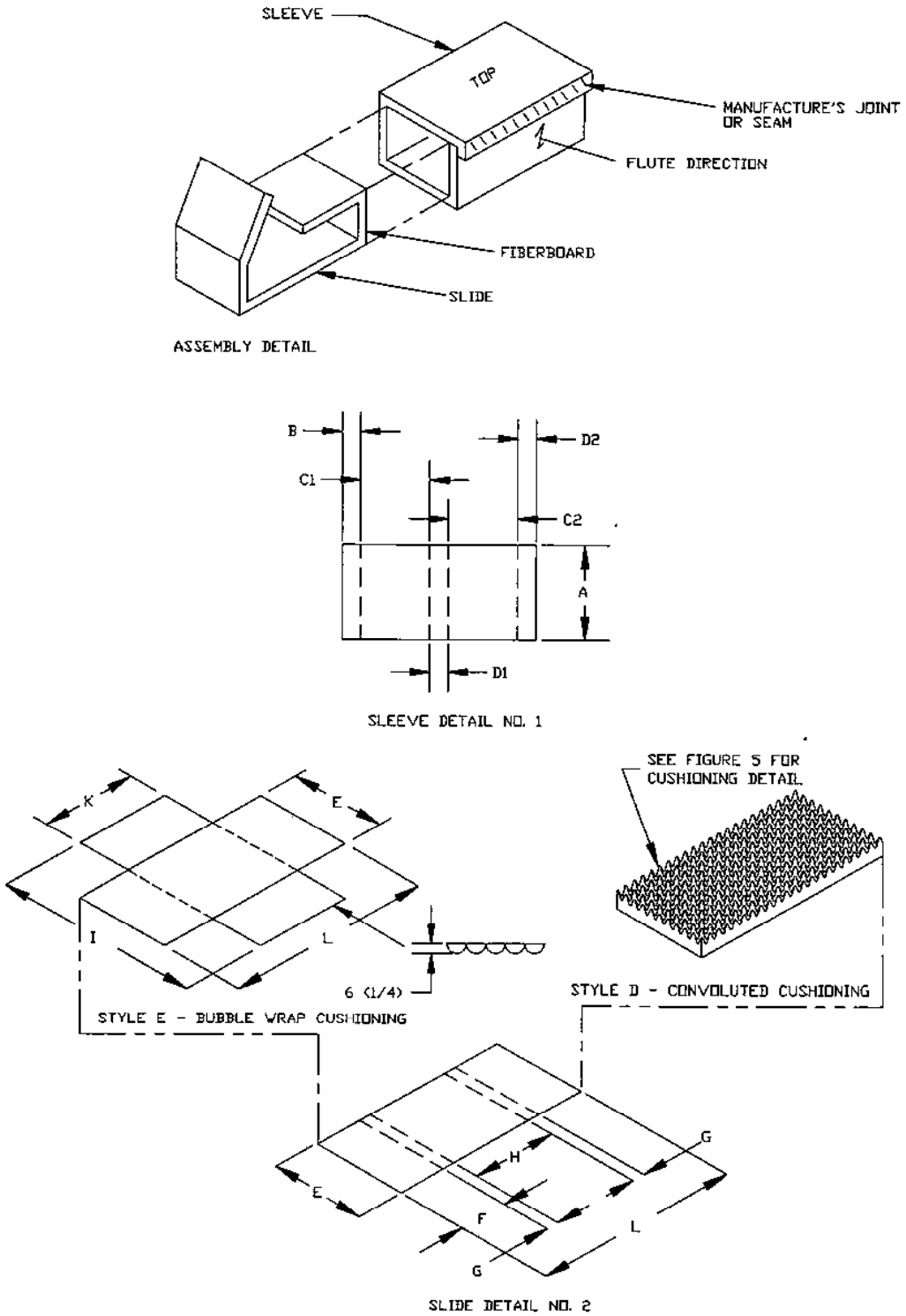

FIGURE 2. Type II, folding cushioning container, style D (see table I for dimensions); style E (see table II for dimensions)

TABLE I. Type II, style D, modified triple slide box (modified TS) 1/

BOX SIZE (ID)	SLEEVE DETAIL NO.1						SLIDE DETAIL NO. 2				CUSHIONING DETAIL NO. 5		
L x W x D	A	B	C1	D1	C2	D2	E	F	G	H	I	K	L
155 x 125 x 65 (6 x 5 x 2-1/2)	160 (6-3/16)	35 (1-3/8)	135 (5-5/16)	78 (3-1/8)	132 (5-1/4)	77 (3-1/16)	122 (4-7/8)	75 (3-1/16)	68 (2-5/8)	158 (6-1/8)	40 (1-9/16)	25 (1)	445 (17-1/2)
155 x 125 x 90 (6 x 5 x 3-1/2)	160 (6-3/16)	35 (1-3/8)	135 (5-5/16)	103 (4-1/8)	132 (5-1/4)	102 (4-1/16)	122 (4-7/8)	75 (3-1/16)	93 (3-5/8)	158 (6-1/8)	40 (1-9/16)	25 (1)	495 (19-1/2)
230 x 155 x 65 (9 x 6 x 2-1/2)	235 (9-3/16)	35 (1-3/8)	165 (6-5/16)	78 (3-1/8)	162 (6-1/4)	77 (3-1/16)	152 (5-7/8)	113 (4-9/16)	68 (2-5/8)	233 (9-1/8)	40 (1-9/16)	25 (1)	595 (23-1/2)
230 x 155 x 90 (9 x 6 x 3-1/2)	235 (9-3/16)	35 (1-3/8)	165 (6-5/16)	103 (4-1/8)	162 (6-1/4)	102 (4-1/16)	152 (5-7/8)	113 (4-9/16)	93 (3-5/8)	233 (9-1/8)	40 (1-9/16)	25 (1)	645 (25-1/2)
230 x 155 x 115 (9 x 6 x 4-1/2)	235 (9-3/16)	35 (1-3/8)	165 (6-5/16)	128 (5-1/8)	162 (6-1/4)	126 (5-1/16)	152 (5-7/8)	113 (4-9/16)	118 (4-3/4)	233 (9-1/8)	40 (1-9/16)	25 (1)	695 (27-7/8)
255 x 255 x 90 (10 x 10 x 3-1/2)	260 (10-3/16)	35 (1-3/8)	265 (10-5/16)	103 (4-1/8)	262 (10-1/4)	102 (4-1/16)	252 (9-7/8)	125 (5-1/16)	93 (3-5/8)	258 (10-1/8)	40 (1-9/16)	25 (1)	695 (27-1/2)
305 x 205 x 65 (12 x 8 x 2-1/2)	310 (12-3/16)	35 (1-3/8)	215 (8-5/16)	78 (3-1/8)	212 (8-1/4)	77 (3-1/16)	202 (7-7/8)	150 (6-1/16)	68 (2-5/8)	308 (12-1/8)	40 (1-9/16)	25 (1)	750 (29-1/2)
305 x 205 x 90 (12 x 8 x 3-1/2)	310 (12-3/16)	35 (1-3/8)	215 (8-5/16)	103 (4-1/8)	212 (8-1/4)	102 (4-1/16)	202 (7-7/8)	150 (6-1/16)	93 (3-5/8)	308 (12-1/8)	40 (1-9/16)	25 (1)	795 (31-1/2)
330 x 330 x 90 (13 x 13 x 3-1/2)	335 (13-3/16)	35 (1-3/8)	340 (13-5/16)	103 (4-1/8)	337 (13-1/4)	102 (4-1/16)	227 (12-7/8)	163 (6-9/16)	93 (3-5/8)	333 (13-1/8)	40 (1-9/16)	25 (1)	845 (33-1/2)
405 x 405 x 90 (16 x 16 x 3-1/2)	410 (16-3/16)	35 (1-3/8)	415 (16-5/16)	103 (4-1/8)	412 (16-1/4)	102 (4-1/16)	402 (15-7/8)	200 (8-1/16)	93 (3-5/8)	408 (16-1/8)	40 (1-9/16)	25 (1)	995 (39-1/2)
460 x 305 x 65 (18 x 12 x 2-1/2)	465 (18-3/16)	35 (1-3/8)	315 (12-5/16)	78 (3-1/8)	312 (12-1/4)	77 (3-1/16)	302 (11-7/8)	228 (9-1/16)	68 (2-5/8)	463 (18-1/8)	40 (1-9/16)	25 (1)	1055 (41-1/2)
460 x 305 x 90 (18 x 12 x 3-1/2)	465 (18-3/16)	35 (1-3/8)	315 (12-5/16)	103 (4-1/8)	312 (12-1/4)	102 (4-1/16)	302 (11-7/8)	228 (9-1/16)	93 (3-5/8)	463 (18-1/8)	40 (1-9/16)	25 (1)	1105 (43-1/2)
610 x 405 x 90 (24 x 16 x 3-1/2)	615 (24-3/16)	35 (1-3/8)	415 (16-5/16)	103 (4-1/8)	412 (16-1/4)	102 (4-1/16)	402 (15-7/8)	303 (12-1/16)	93 (3-5/8)	613 (24-1/8)	40 (1-9/16)	25 (1)	1405 (55-1/2)

NOTE: 1/ All dimensions are in millimeters (inches)

TABLE II. Type II, style E, one piece folder (OPF) 1/

BOX SIZE (ID)	SLEEVE DETAIL NO.1						SLIDE DETAIL NO. 2				CUSHIONING DETAIL NO. 5		
L x W x D	A	B	C1	D1	C2	D2	E	F	G	H	I	K	L
180 x 125 x 30 (7 x 5 x 1-1/4)	185 (7-1/4)	35 (1-3/8)	135 (5-5/16)	43 (1-11/16)	132 (5-1/4)	40 (1-9/16)	125 (5)	90 (3-9/16)	33 (1-3/8)	183 (7-1/8)	370 (14-1/2)	180 (7)	430 (17)
180 x 125 x 60 (7 x 5 x 2-1/4)	185 (7-1/4)	35 (1-3/8)	135 (5-5/16)	68 (2-11/16)	132 (5-1/4)	65 (2-9/16)	125 (5)	88 (3-9/16)	63 (2-3/8)	183 (7-1/8)	420 (16-1/2)	180 (7)	485 (19)
230 x 155 x 30 (9 x 6 x 1-1/4)	235 (9-3/16)	35 (1-3/8)	165 (6-5/16)	43 (1-11/16)	162 (6-1/4)	40 (1-9/16)	155 (6)	116 (4-9/16)	33 (1-3/8)	233 (9-1/8)	420 (16-1/2)	230 (9)	535 (21)
230 x 155 x 60 (9 x 6 x 2-1/4)	235 (9-3/16)	35 (1-3/8)	165 (6-5/16)	68 (2-11/16)	162 (6-1/4)	65 (2-9/16)	155 (6)	116 (4-9/16)	63 (2-3/8)	233 (9-1/8)	475 (18-1/2)	230 (9)	585 (23)
255 x 255 x 75 (10 x 10 x 3)	260 (10-3/16)	35 (1-3/8)	265 (10-5/16)	88 (3-7/16)	262 (10-1/4)	85 (3-5/16)	255 (10)	130 (5-1/16)	78 (3-1/8)	258 (10-1/8)	710 (28)	255 (10)	675 (26-1/2)
305 x 205 x 30 (12 x 8 x 1-1/4)	310 (12-3/16)	35 (1-3/8)	215 (8-5/16)	43 (1-11/16)	212 (8-1/4)	40 (1-9/16)	205 (8)	155 (6-1/16)	33 (1-3/8)	308 (12-1/8)	525 (20-1/2)	305 (12)	785 (27)
305 x 205 x 60 (12 x 8 x 2-1/4)	310 (12-3/16)	35 (1-3/8)	215 (8-5/16)	68 (2-11/16)	212 (8-1/4)	65 (2-9/16)	205 (8)	150 (6-1/16)	63 (2-3/8)	308 (12-1/8)	575 (22-1/2)	305 (12)	750 (29-1/2)
330 x 330 x 60 (13 x 13 x 2-1/4)	335 (13-3/16)	35 (1-3/8)	340 (13-5/16)	68 (2-11/16)	337 (13-1/4)	65 (2-9/16)	330 (13)	163 (6-9/16)	63 (2-3/8)	333 (13-1/8)	830 (32-1/2)	330 (13)	785 (31)
405 x 405 x 60 (16 x 16 x 2-1/4)	410 (16-3/16)	35 (1-3/8)	415 (16-5/16)	68 (2-11/16)	412 (16-1/4)	65 (2-9/16)	405 (16)	203 (8-1/16)	63 (2-3/8)	408 (16-1/8)	980 (38-1/2)	405 (16)	940 (37)
460 x 305 x 30 (18 x 12 x 1-1/4)	465 (18-3/16)	35 (1-5/16)	315 (12-5/16)	43 (1-11/16)	312 (12-1/4)	40 (1-9/16)	305 (12)	230 (9-1/16)	33 (1-3/8)	463 (18-1/8)	725 (28-1/2)	460 (18)	990 (39)
460 x 305 x 60 (18 x 12 x 2-1/4)	465 (18-3/16)	35 (1-3/8)	315 (12-5/16)	68 (2-11/16)	312 (12-1/4)	65 (2-9/16)	305 (12)	225 (9-1/16)	63 (2-3/8)	463 (18-1/8)	775 (30-1/2)	460 (18)	1040 (41)
610 x 405 x 65 (24 x 16 x 2-1/2)	615 (24-3/16)	35 (1-3/8)	415 (16-5/16)	73 (2-5/16)	412 (16-1/4)	70 (2-13/16)	405 (16)	303 (12-1/16)	68 (2-5/8)	613 (24-1/8)	990 (39)	610 (24)	1360 (53-1/2)

NOTE: 1/ All dimensions are in millimeters (inches)

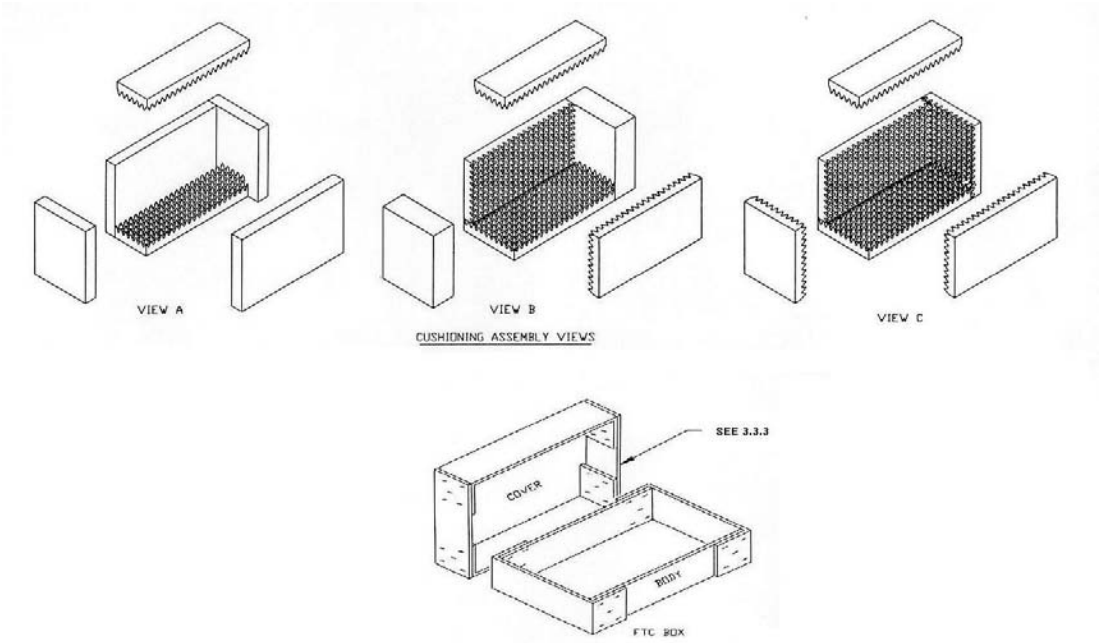

CUSHIONED BOX DATA ALL DIMENSIONS ARE IN MILLIMETERS (INCHES)									
		CUSHIONING PADS NOTE: Pads are convoluted unless noted as flat				END PADS ONLY *		CUSHION DETAIL *	
BOX SIZE (ID) L X W X D	ASSY VIEW	TOP (1 EACH)	BOTTOM (1 EACH)	SIDE (2 EACH)	END (2 EACH)	I	K	I	K
510x355x230 (20x14x9)	A	395x240x70 (15.5x9.5x2.75)	405x230x70 (16x10x2.75	405x230x50 (16x9x2) FLAT	355x230x50 (14x9x2)	---	---	70 (2.75)	38 (1.5)
610x355x355 (24x14x14)	C	405x355x95 (16x6x3.75)	420x355x95 (16.5x14x3.75)	420x260x95 (16.5x10.25x3.75)	355x355x95 (14x14x3.75)	---	---	95 (3.75)	38 (1.5)
610x460x405 (24x18x16)	C	405x25x95 (16x10x3.75)	420x460x95 (16.5x18x3.75)	420x310x95 (16.5x12.25x3.75)	460x405x95 (18x16x3.75	---	---	95 (3.75)	38 (1.5)
635x355x355 (25x14x14)	B	320x10x120 (12.5x4x4.75)	330x355x120 (13x14x4.75)	330x235x120 (13x9.25x4.75)	355x355x155 (14x14x6) FLAT	---	---	120 (4.75)	38 (1.5)
660x230x230 (26x9x9)	C	460x75x70 (18x3x2.75)	470x230x70 (18.5x9x2.75)	470x160x70 (18.5x6.25x2.75)	230x230x95 (9x9x3.75)	95 (3.75)	38 (1.5)	70 (2.75)	38 (1.5)
760x405x355 (30x16x14)	C	560x205x95 (22x8x3.75)	570x405x95 (22.5x16x3.75)	570x260x95 (22.5x10.25x3.75)	405x355x95 (16x14x3.75)	---	---	95 (3.75)	38 (1.5)
760x685x355 (30x27x14)	C	560x485x95 (22x19x3.75)	570x685x95 (22.5x27x3.75)	570x260x95 (22.5x10.25x3.75)	685x355x95 (27x14x3.75)	---	---	95 (3.75)	38 (1.5)
815x305x355 (32x12x14)	C	610x100x95 (24x4x3.75)	625x305x95 (24.5x12x3.75)	625x260x95 (24.5x10.25x3.75)	305x355x95 (12x14x3.75)	---	---	95 (3.75)	38 (1.5)
815x460x405 (32x18x16)	C	560x255x95 (22x10x3.75)	570x460x95 (22.5x18x3.75)	570x310x95 (22.5x12.25x3.75)	460x405x120 (18x16x4.75)	120 (4.75)	38 (1.5)	95 (3.75)	38 (1.5)
865x610x460 (34x24x18)	C	610x405x95 (24x16x3.75)	625x610x95 (24.5x24x3.75)	625x360x95 (24.5x14.25x3.75)	610x460x120 (24x18x4.75)	120 (4.75)	38 (1.5)	95 (3.75)	38 (1.5)
760x760x230 (30x30x9)	C	622x622x70 (24.5x24.5x2.75)	622x760x70 (24.5x30x2.75)	622x88x70 (24.5x3.5x2.75)	760x230x70 (30x9x2.75)	---	---	70 (2.75)	38 (1.5)
1000x1000x230 (40x40x9)	C	876x876x70 (34.5x34.5x2.75)	876x1000x70 (34.5x40x2.75)	876x88x70 (34.5x3.5x2.75)	1000x230x70 (40x9x2.75)	---	---	70 (2.75)	38 (1.5)

* SEE FIGURE 5 FOR CUSHIONING DETAIL
** BOX MATERIAL COMPLYING WITH V13C

FIGURE 3. Type III, style G – full telescope box (FTC)

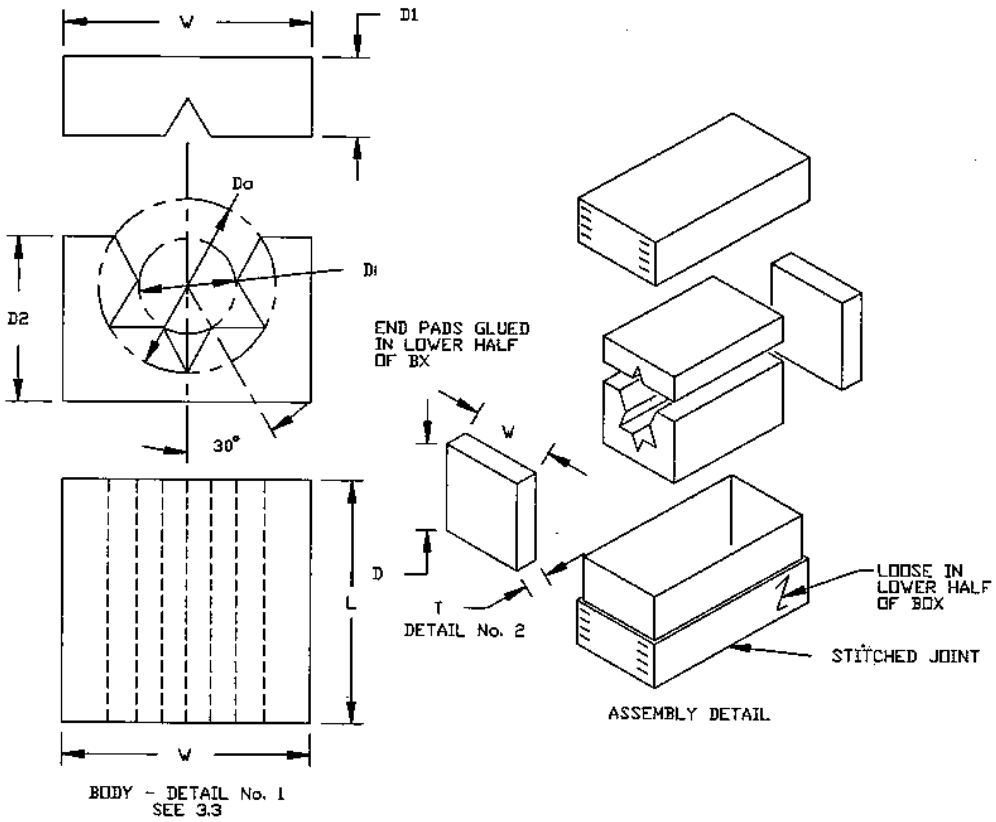

CUSHIONED BOX DATA ALL DIMENSIONS ARE IN MILLIMETERS (INCHES)							
BOX SIZE (ID) L x W x D	DETAIL No. 1						DETAIL No. 2 W x D x T
	L	W	D1	D2	di	do	
510x355x355 (20x14x14)	355 (14)	355 (14)	115 (4.5)	240 (9.5)	140 (5.5)	255 (10)	355x355x75 (14x14x3)
560x405x405 (22x16x16)	405 (16)	405 (16)	125 (5)	280 (11)	165 (6.5)	305 (12)	405x405x75 (16x16x3)

FIGURE 4. Type IV, style B – double cover container (DBLCC)

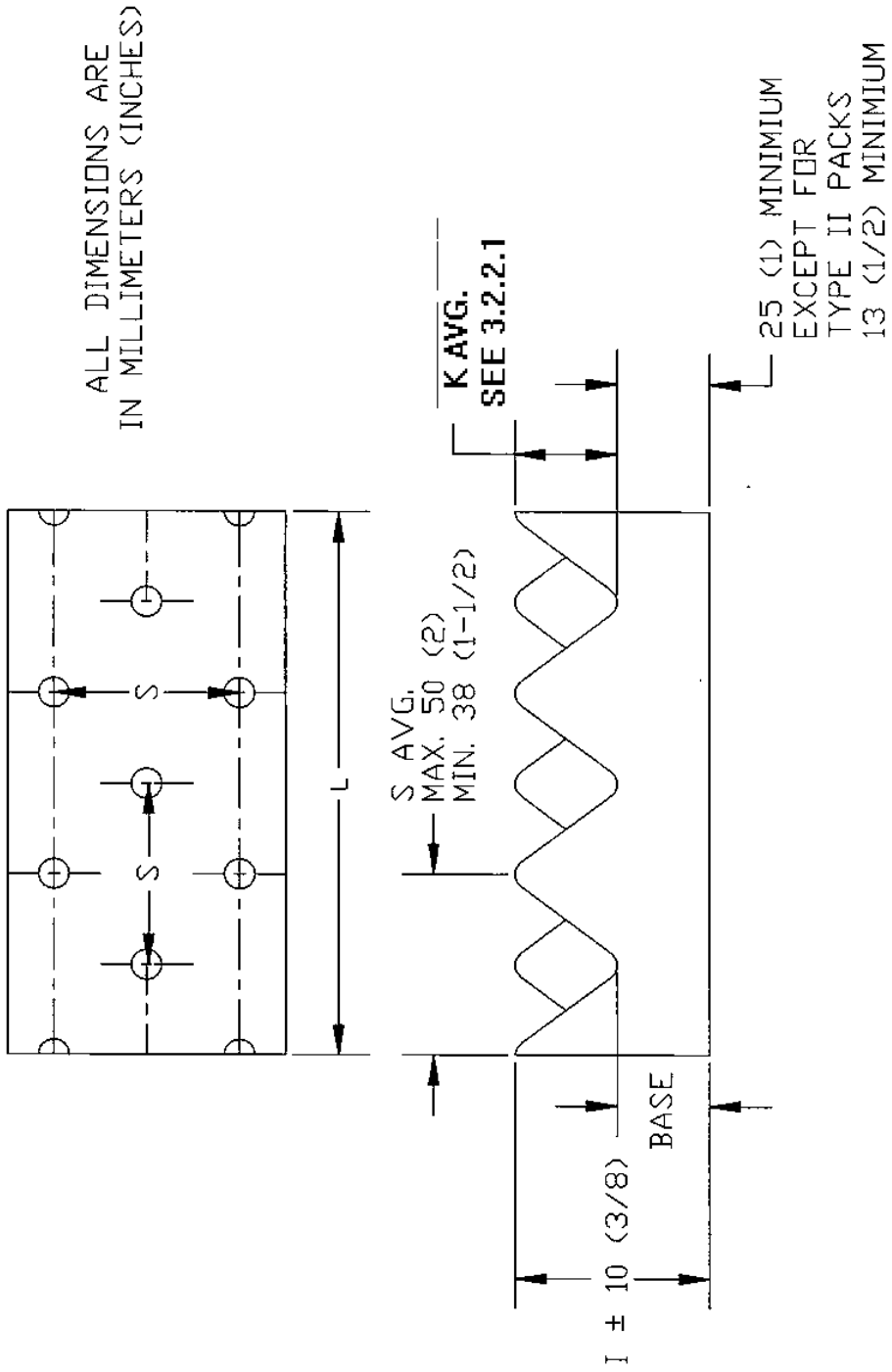

FIGURE 5. Standard convoluted cushioning detail.

3.2.4 Metal fasteners.

Metal fasteners shall be steel staples and steel stitching wire specified for use in ASTM D5118/5118M.

3.2.5 Adhesive.

Adhesive for bonding of the appropriate cushioning and fiberboard components shall conform to materials specified in ASTM D5118/5118M.

3.3 Design and Construction.

3.3.1 Type I.

The box, with appropriate cushioning components, shall be constructed in accordance with style A (RSC), style B (DBLCC), or style C (modified DBLCC) designs shown on figure 1 and as specified herein (see 7.2).

3.3.1.1 Style A.

Style A (RSC) (see figure 1) boxes shall be in accordance with ASTM D5118/5118M. The manufacturer's joint and the bottom flaps shall be stapled or stitched as specified therein. The cushioning components shall be placed in the box (see figure 1) and the top shall be taped closed with a minimum 50 mm x 50 mm (2 x 2 inch) strip of tape as specified in 3.2.3 or equivalent minimum closure to facilitate delivery and undamaged reopening.

3.3.1.2 Style B.

Style B (DBLCC) (see figure 1) shall be in accordance with ASTM D5118/5118M except that the covers shall extend to one-half the depth of the tube. The lap for the tube shall be fastened inside the adjoining panel.

3.3.1.3 Style C.

Style C (modified DBLCC) (see figure 1) shall be in accordance with ASTM D5118/5118M except that joints for the covers and single-piece tube shall be butted and secured with metal fasteners as specified in 3.2.4 and the covers shall extend to one-half the depth of the tube.

3.3.2 Type II

Type II boxes with appropriate cushioning components shall be constructed at the option of the manufacturer in accordance with style D (modified TS) or style (OPF) and as specified herein (see 7.2).

3.3.2.1 Style D.

The pack shall be constructed in accordance with figure 2. The box and cushioning shall be constructed in accordance with the triple slide box style (modified TS) and ASTM D5118/5118M except that the middle box shall be omitted and the sleeve shall have the overlap stitched, stapled, or glued (see 3.2.4 and 3.2.5) outside the side panel. The top of the box shall be the

large portion of the box where the manufacturer's joint or seam is located with the open flutes facing downward.

3.3.2.2 Style E.

The box and cushioning shall be constructed in accordance with figure 2 with the one-piece folder style OPF and ASTM D5118/5118M, except that the inner end flaps shall meet when closed.

3.3.3 Type III, Style G.

The telescoping and encapsulated packs shall be constructed in accordance with style FTC of ASTM D5118/5118M with appropriate cushioning as shown on figure 3.

3.3.4 Type IV, Style B.

The horizontal star packs shall be constructed in accordance with the DBLCC shown on figure 4. The box shall be constructed in accordance with 3.3.1.2.

3.3.5 Bonding of components.

Adhesive specified in 3.2.5 shall be applied to cushioning components described herein to provide a minimum fifty (50) percent contact area to adhere the cushioning to each of the box components. For type IV, style B on figure 4, and type III, style G on figure 3, the top cushioning pads shall be centered and adhered to the inside face of the top cap. In addition, style G side and end cushioning pads shall be arranged and adhered in accordance with the applicable view on figure 3. For type II packs (see figure 2), the cushioning shall be centered and adhered to the inside faces of the slide.

3.4 Dimensions.

All box sizes shall be based on and identified by the inside dimensions of the innermost shell such as box, tube, or slide and shall be accurate to within 3 mm (1/8 inch). These dimensions shall be cited in the sequence of length, width, and depth. The center of the die-cut star cavity for type I and type IV shall be within 13 mm (1/2 inch) of true center.

3.5 Markings.

Markings shall be either printed or stenciled in black letters. All markings shall be in the upright direction and shall be clear and legible.

3.5.1 Compliance and certificate markings.

Compliance and certificate markings shall be imprinted on all boxes in accordance with ASTM D5118/5118M except as specified herein. Data markings such as the National Stock Number (NSN), inside dimensions, and any other which are required to be printed elsewhere on the box shall not be repeated in the compliance and certificate markings. The compliance and certificate markings shall be placed on the bottoms of the boxes.

3.5.2 Markings for type I, type III, and type IV packs.

The following markings shall be in characters of a size not less than 13 mm (1/2 inch) high, except that the NSN may be not less than 10 mm (3/8 inch). The markings shall be centered

on the lower half of two opposite faces of the style A packs parallel to the closure seam formed by the outer flaps and style G pack covers. The markings shall be on two opposite faces of the bottom cap of the style B and style C packs. The markings format shall be as follows:

Format:

REUSABLE
FAST PACK - (Enter proper pack code, see table I)
PACK SIZE AND SHIPPING CUBE (see table III; use either metric or English units, see 7.2.3)
NSN (see table III)

EXAMPLE:

REUSABLE
FAST PACK - XA2
205 x 205 x 305 CU 0.013
8115-00-192-1604

3.5.3 Markings for type II packs.

The following markings shall be in characters of a size not less than 6 mm (1/4 inch) high. The markings shall be placed within approximately the right one-third of the two narrow sides of the pack. The marking format shall be as follows:

Format:

REUSABLE - FAST PACK - (Enter proper pack code, see table I)
PACK SIZE AND SHIPPING CUBE (see table III; use either metric or English units, see 7.2.3)
NSN (see table III)

EXAMPLE:

REUSABLE - FAST PACK - XC1
155 x 125 x 65 CU 0.001
8115-00-787-2142

The slide shall be marked with the words "PUSH OPEN" and "ANTI STATIC" visually centered on each end. The words "PUSH OPEN" and "ANTI STATIC" shall be in 10 mm (3/8 inch) characters. The words "ANTI STATIC" shall be placed a 6 mm (1/4 inch) below the words "PUSH OPEN". There shall be a 50 mm (2 inch) space between the words "PUSH" and "OPEN" and the words "ANTI" and "STATIC" as shown below.

(50 mm [2 inch])

PUSH	OPEN
ANTI	STATIC

3.6 Workmanship.

In addition to meeting the requirements of the individual material specifications, the completed box and cushioning components shall be clean, free of malformed or misaligned edges, faces, scores, slots, die-cuts, and any defects which may affect durability, strength, and serviceability. All components shall be accurately dimensioned and fabricated so that the assembled components will fit closely without undue binding.

4. REGULATORY REQUIREMENTS

The offeror/contractor is encouraged to use recovered materials to the maximum extent practicable, in accordance with 23.403 of the Federal Acquisition Regulation (FAR).

5. PRODUCT CONFORMANCE

5.1 Product conformance.

The products provided shall meet the salient characteristics of this document, conform to the producer's own drawings, specifications, standards, and quality assurance practices, and be the same product offered for sale in the commercial marketplace. The Government reserves the right to require proof of such conformance.

5.2 Responsibility for inspection.

Unless otherwise specified in the contract, the contractor is responsible for the performance of all inspection requirements as specified herein. Except as otherwise specified in the contract, the contractor may use his own or any other facilities suitable for the performance of the inspection requirements specified herein, unless disapproved by the government. The government reserves the right to perform any of the inspections set forth in the specification where such inspections are deemed necessary to assure that supplies and services conform to prescribed requirements.

5.3 Component and material quality conformance inspection.

In accordance with 5.1, components and materials shall be inspected in accordance with all the requirements of referenced drawings, specifications, and standards unless otherwise excluded, amended, modified, or qualified in this specification or applicable purchase document. Unless otherwise specified, sampling for inspection shall be performed in accordance with ASQ Z1.4.

5.4 Inspection of the end item.

Unless otherwise specified, all inspections shall be performed in accordance with the test conditions specified in the applicable test method document or applicable paragraphs in this specification.

TABLE III. Fast pack codes, sizes, cubes, and NSN's.

Pack Code No.	Container Size ID mm (In)	Unit Cube m^3 (ft^3)	Shipping Cube m^3 (ft^3)	NSN
Type I				
-XA1	155 x 155 x 255 (6 x 6 x 10)	0.006 (0.21)	0.007 (0.241)	8115-00-192-1603
-XA2	205 x 205 x 305 (8 x 8 x 12)	0.013 (0.44)	0.014 (0.498)	8115-00-192-1604
-XA3	255 x 255 x 305 (10 x 10 x 12)	0.02 (0.69)	0.023 (0.798)	8115-00-192-1605
-XA4	305 x 305 x 355 (12 x 12 x 14)	0.033 (1.17)	0.037 (1.311)	8115-00-134-3655
-XA5	305 x 305 x 460 (12 x 12 x 18)	0.043 (1.5)	0.047 (1.673)	8115-00-050-5237
-XA6	355 x 355 x 405 (14 x 14 x 16)	0.051 (1.81)	0.057 (2.008)	8115-00-134-3656
Type II				
-XC1	155 x 125 x 65 (6 x 5 x 2-1/2)	0.001 (0.04)	0.002 (0.058)	8115-00-787-2142
-XC2	155 x 125 x 90 (6 x 5 x 3-1/2)	0.002 (0.06)	0.002 (0.078)	8115-00-787-2147
-XC3	230 x 155 x 65 (9 x 6 x 2-1/2)	0.002 (0.08)	0.003 (0.102)	8115-00-101-7647
-XC4	230 x 155 x 90 (9 x 6 x 3-1/2)	0.003 (0.11)	0.004 (0.136)	8115-00-101-7638
-XC5	305 x 205 x 65 (12 x 8 x 2-1/2)	0.004 (0.14)	0.005 (0.181)	8115-00-787-2146
-XC6	305 x 205 x 90 (12 x 8 x 3-1/2)	0.006 (0.19)	0.007 (0.241)	8115-00-787-2148
-XC7	460 x 305 x 65 (18 x 12 x 2-1/2)	0.009 (0.31)	0.011 (0.402)	8115-01-019-4085
-XC8	460 x 305 x 90 (18 x 12 x 3-1/2)	0.013 (0.44)	0.015 (0.536)	8115-01-019-4084
-XC9	255 x 255 x 90 (10 x 10 x 3-1/2)	0.006 (0.2)	0.007 (0.256)	8115-01-057-1244
-XD1	330 x 330 x 90 (13 x 13 x 3-1/2)	0.01 (0.34)	0.012 (0.422)	8115-01-057-1243
-XD2	405 x 405 x 90 (16 x 16 x 3-1/2)	0.015 (0.52)	0.018 (0.631)	8115-01-057-1245
-XD3	610 x 405 x 90 (24 x 16 x 3-1/2)	0.022 (0.78)	0.027 (0.936)	8115-01-093-3730
-XD4	230 x 155 x 115 (9 x 6 x 4-1/2)	0.004 (0.132)	0.005 (0.172)	8115-01-499-0898

TABLE III. Fast Pack codes, sizes, cubes, and NSN's - Continued.

Pack Code No	Container Size ID mm (In)	Unit Cube m^3 (Ft^3)	Shipping Cube m^3 (Ft^3)	NSN
Type III				
-XE1	760 x 405 x 355 (30 x 16 x 14)	0.109 (3.889)	0.125 (4.422)	8115-00-516-0242
-XE2	815 x 305 x 355 (32 x 12 x 14)	0.088 (3.111)	0.102 (3.600)	8115-00-519-1825
-XE3	610 x 355 x 355 (24 x 14 x 14)	0.077 (2.722)	0.089 (3.147)	8115-00-550-3558
-XE4	510 x 355 x 230 (20 x 14 x 9)	0.042 (1.458)	0.049 (1.732)	8115-00-516-0251
-XE5	635 x 355 x 355 (25 x 14 x 14)	0.080 (2.84)	0.093 (3.273)	8115-00-550-3574
-XE6	815 x 460 x 405 (32 x 18 x 16)	0.152 (5.333)	0.168 (5.915)	8115-01-015-1315
-XE7	610 x 460 x 405 (24 x 18 x 16)	0.114 (4.000)	0.159 (4.536)	8115-01-015-1312
-XE8	660 x 230 x 230 (26 x 9 x 9)	0.035 (1.219)	0.041 (1.453)	8115-01-015-1313
-XE9	865 x 610 x 460 (34 x 24 x 18)	0.243 (8.500)	0.301 (10.636)	8115-01-015-1314
-XF1	760 x 685 x 355 (30 x 27 x 14)	0.185 (6.563)	0.213 (7.535)	8115-01-094-6520
-XF2	760 x 760 x 230 (30 x 30 x 9)	0.185 (6.563)	0.237 (7.540)	8115-01-499-0895
-XF3	1000 x 1000 x 230 (40 x 40 x 9)	0.235 (8.330)	0.271 (9.570)	8115-01-499-0897
Type IV				
-XG1	510 x 355 x 355 (20 x 14 x 14)	0.064 (2.269)	0.071 (2.494)	8115-01-010-8956
-XG2	560 x 405 x 405 (22 x 16 x 16)	0.092 (3.259)	0.100 (3.545)	8115-01-006-7257

5.4.1 Classification of defects.

All defects shall be classified as either a critical, major, or minor defect. A critical defect shall be justified as a defect that may cause injury to personnel or property. A major defect shall be justified as a defect that may affect performance and quality of the container. A minor defect shall be justified as a defect that is a discrepancy in this specification but does not apply to a critical or major defect. All critical and major defects shall constitute a failure of the container to meet the requirements of this specification and shall deem the container unacceptable by the Government (see 5.2). All minor defects shall be under the discretion of the contracting officer to either deem the container acceptable or unacceptable.

5.4.2 Examination of the end item.

The end item shall be examined for the defects listed in 5.4.2.1 at the inspection level set forth in 5.4.2.4. A random sample of boxes of each type, style, and size offered shall be selected

from each lot and examined for visual and dimensional acceptance. The lot size, for purposes of determining the sample size in accordance with ANSI/ASQC Z1.4, shall be expressed in units of boxes for examination under 5.4.2.1; in units of bundles for examination under 5.4.2.2; and in units of shipping containers fully prepared for delivery for examination under 5.4.2.3.

5.4.2.1 Examination of the end item for defects in appearance, construction, and workmanship.

The sample unit for examination (see table IV) shall be one complete unit consisting of a box and appropriate cushioning components. Defects that require measurement shall be measured to the nearest 1 mm (1/16 inch). Measurements shall be taken using a standard metric unit measuring tape with the smallest division increments no greater than 1 mm. A standard English unit measuring tape with increments no greater than 1/16 inch may be used. Shipping cube is calculated using the external dimensions. Unit cube is calculated using the internal dimensions. For unit cube measurements, measure length along side opposite the joint from one end to the other. Measure width along end opposite the joint from one side to the other. The depth shall be the distance between inner faces of top and bottom. Dimensions are always given in this order: length x width x depth.

TABLE IV. End item examination.

EXAMINE	DEFECT	CATEGORY	
		MAJOR	MINOR
Type of board (3.2.1)	Material not as specified.	X	
Cushioning (3.2.2)	Material not as specified.	X	
	Dimensions not as specified (see 3.2.2.1.)	X	
Cushion and component bonding	Adhesive not applied or cushioning not securely adhered to board.	X	
	Lamination pads are not composed of the same material (see 3.2.2.2).	X	
	Lamination pads are less than 50 mm (2 inches) thick (see 3.2.2.2).	X	
	Type II convoluted cushioning is not cut from a single piece of foam (see 3.2.2.2).	X	
	Laminations do not use adhesive as specified in 3.2.5 (see 3.2.2.3).	X	
Tape (3.2.3)	Tape is not as specified.	X	
Metal fasteners (3.2.4)	Metal fasteners are not as specified.	X	
Adhesive (3.2.5)	Adhesive is not as specified.	X	

TABLE IV. End item examination. - Continued

		CATEGORY	
EXAMINE	DEFECT	MAJOR	MINOR
Design and construction (3.3)	Boxes not type and style specified	X	
	Boxes are not constructed in accordance with the applicable figures (see 3.3.1, 3.3.2, 3.3.3, and 3.3.4).	X	
Style A boxes (3.3.1.1)	Style A boxes are not in accordance with ASTM D5118/5118M.	X	
	Manufacturer's joint and bottom flange are not stapled or stitched.	X	
	Cushioning components are not placed inside.	X	
	Top is not closed to facilitate delivery.		X
	Top is damaged when reopened after delivery.	X	
Style B boxes (3.3.1.2 and 3.3.4)	Style B boxes are not in accordance with ASTM D5118/5118M.	X	
	Cover does not extend to half the depth of the tube.	X	
Style C boxes (3.3.1.3)	Style C boxes are not in accordance with ASTM D5118/5118M.	X	
	Joints for covers and single-piece tubes are not butted and secured with metal fasteners.	X	
Style D boxes (3.3.2.1)	Style D boxes are not in accordance with ASTM D5118/5118M	X	
	The sleeve overlap is not stitched, stapled, or glued.	X	
Style E boxes (3.3.2.2)	Style E boxes are not in accordance with ASTM D5118/5118M	X	
Style G boxes (3.3.3)	Style G boxes are not in accordance with ASTM D5118/5118M.	X	
Bonding of components (3.3.5)	Cushioning components are not adhered to box components with 50 percent contact area.		X
	Cushioning is not centered and adhered into position in accordance with applicable figures.		X

TABLE IV. End item examination. - Continued

		CATEGORY	
EXAMINE	DEFECT	MAJOR	MINOR
Dimensions (3.4)	Length, width, or depth varies by more than ±3 mm (1/8 inch) from size specified. See paragraph for measurement details.	X	
	The center of the die-cut star cavity for types I and IV is not within 13 mm (1/2 inch) of true center.	X	
Markings (3.5)	Markings are missing, illegible, incomplete, or incorrect.	X	
	Markings are not positioned as specified or of proper size.		X
Workmanship (3.6)	Improper fit of components.	X	
Condition of components (boxes, sleeves, slides, caps, tubes, and cushions) (3.6)	Tear, split, or puncture (affecting serviceability).	X	
	Unduly dirty, stained, or scuffed.	X	
	Unduly ragged, uneven, or crushed edges (except crushed edge of fiberboard at manufacturer's joint)	X	

5.4.2.2 Examination of the end item for count per bundle.

The sample unit for this examination shall be one bundle of one type, style, and size of assembled packs. The count per bundle shall be not less than specified.

5.4.2.3 Examination of preparation for delivery.

An examination shall be made to determine that packaging, packing, and markings comply with the requirements of section 5. The sample unit for this examination shall be one shipping container or pallet load prepared for shipment.

5.4.2.4 Inspection levels for examination.

The inspection levels, for determining the sample size, shall be as follows:

Examination	Inspection Level
5.4.2.1	S – 1
5.4.2.2	S – 4
5.4.2.3	S – 1

5.5 Electrostatic properties test.

Specimens shall be tested for conformance to the requirements of 3.2.2.4. The static decay time of the cushioning material specimens shall be determined in accordance with 5.4.3 of MIL-STD-3010. Cushioning material specimen thickness shall be 13 mm (1/2 inch) + 3 mm (1/8 inch) –0.

5.5.1 Electrostatic decay time test.

A static decay time greater than 2 seconds shall be cause for rejection (see 3.2.2.5) when tested in accordance with MIL-STD-3010.

6. PACKAGING

Preservation, packaging, and marking shall be as specified in the contract or order.

7. NOTES

7.1 Source of Documents.

7.1.1 CFR.

The Code of Federal Regulations (CFR) may be obtained from the Superintendent of Documents, U.S. Government Printing Office, North Capitol and H Streets, NW, Washington DC 20402-0002 or www.access.gpo.gov.

7.1.2 ASTM.

ASTM Standards are available from ASTM International, 100 Bar Harbor Dr., W. Conshohocken PA 19428-2959 or www.astm.org.

D996	- Standard Terminology of Packaging and Distribution Environments
D3575	- Standard Test Methods for Flexible Cellular Materials Made from Olefin Polymer
D3330/D3330M	- Standard Test Method for Peel Adhesion of Pressure-Sensitive Tape
D 3950	- Standard Specification for Strapping, Nonmetallic (and Joining Methods)
D 3951	- Standard Practice for Commercial Packaging (DoD Adopted)
D4727/D4727M	- Standard Specification for Corrugated and Solid Fiberboard Sheet Stock (Container Grade) and Cut Shapes (DoD Adopted)
D 5118/5118M	- Standard Practice for Fabrication of Fiberboard Shipping Boxes (DoD Adopted)
D5330/D5330M	- Standard Specification for Pressure-Sensitive Tape for Packaging, Filament-Reinforced

7.1.3 ANSI/ASQ.

ANSI/ASQ Standards are available from ANSI, 25 West 43rd St., 4th Floor, New York NY 10036-7406 or www.ansi.org or ASQ, P.O. Box 3005, Milwaukee, WI 53201-3005 or www.asq.org.

ANSI/ASQC Z1.4 - Sampling Procedures and Tables for Inspection by Attributes (DoD Adopted)

7.1.4 IEEE/ASTM International.

IEEE and ASTM International publish this standard jointly. Copies are available from IEEE Service Center, 445 Hoes Lane, Piscataway NJ 08854-1331 or www.ieee.org or ASTM International, 100 Bar Harbor Dr., West Conshohocken PA 19428-2959 or www.astm.org.

IEEE/ASTM SI 10 - Use of the International System of Units (SI) - The Modern Metric System

7.1.5 Government publications.

The following documents, of the issue in effect on date of invitation for bids or request for proposal, form a part of this document to the extent specified herein. (Copies of military specifications and standards required by contractors in connection with specific procurement functions are obtained from the Standardization Documents Order Desk, Building 4D, 700 Robbins Ave., Philadelphia PA. 19111-5094 or http://assist2.daps.dla.mil/quicksearch/ or www.dodssp.daps.mil.)

Air Force Technical Order (Not contractually binding, for reference only)

TO 00-85B-3 – How to Package Air Force Spares

Military Specification

MIL-PRF-26514 - Polyurethane Foam, Rigid or Flexible, for Packaging

Military Standard

MIL-STD-2073-1 – DoD Standard Practice for Military Packaging
MIL-STD-3010 – Test Procedures for Packaging Materials

Federal Specification

PPP-C-795 – Cushioning Material, Packaging (Flexible Closed Cell Plastic Film for Long Distribution Cycles).

7.2 Ordering data.

The contract or order should specify the following:

a. CID document number and revision letter

b. Type, style, and size of box (see 2.1)

c. Product conformance provisions.

d. Packaging requirements.

7.2.1 Additional ordering data.

In addition, the purchaser may include the following information in procurement documents:

a. Contact corrosivity (see 5.3.2 of MIL-STD-3010, cleaning per ASTM D3330/D3330M. Also defined in MIL-PRF-26514)

b. Special color.

c. Compression set (see ASTM D3575, suffix B, maximum of 25% set typical value).

d. Flexibility (procuring activity must define test).

e. Thermal stability (see ASTM D3575, suffix S, dimensional change not greater than 2% typical value).

f. Flammable blowing agent content (procuring activity must define test to determine lower explosive limit (LEL), typical value is 50%) (see NIPHLE 97T-002).

g. Fire retardancy (procuring activity must define test).

7.2.2 Samples.

Normally no samples for determining compliance with this specification will be necessary prior to award. If samples with bids are required, they should be specifically requested in the invitation for bids, and the purpose of the bid sample should be definitely stated, the specification to apply in all other respects.

7.2.3 Metric units.

Metric units, to those English equivalents indicated in parenthesis throughout this document, are based on practices, conversion factors, and symbols specified in IEEE/ASTM SI 10. Metric units are not exact conversions from English units and are not intended to be so. All metric units should be adhered to. English equivalents are only provided for convenience and should not be used for procurement purposes.

7.3 Key words.

Anti-static
Corrosivity
Electrostatic decay
Fast pack
Reusable container
Slide pack
Thermal stability

APPENDIX A

CLOSURE, OPENING, AND FIELD INSPECTION REQUIREMENTS

A.1 SCOPE

A.1.1 Scope.

This appendix covers requirements for closure, reinforcing, opening, reuse, and field inspection of fast packs. This Appendix is not a mandatory part of the specification. The information contained herein is intended for guidance only.

A.2 REQUIREMENTS

A.2.1 Closure and marking of fast packs.

Closure of fast packs should be effected when item is placed therein and packed for shipment and storage. Marking for military shipment and storage of packs should comply with the requirements listed in MIL-STD-2073-1. The tape used for reinforcement and closure should be of the specification, type, and size as specified for each type and style of box to provide level B and Less than level B packing (see A.2.1.1 and A.2.1.2). Insofar as practical, no preprinted markings, except container certification marking, should be obscured by taping or reinforcement. Obscured or obliterated markings that are preprinted on reused boxes need not be remarked except for the fast pack code (see table A-I).

A.2.1.1 Level B packing (see figure A-1).

A.2.1.1.1 Type I, style A.

Type I, style A packs should be sealed with tape, 50 mm (2 inches) in width, and should conform to ASTM D5330/D5330M, type III or specified tapes in ASTM D5118/5118M applied over all seams, corners, and manufacturer's joints. The tape should be centered over the seams and joints and should extend over all the corners and edges of the box a minimum of 50 mm (2 inches) onto the adjacent box panels. Tape should be applied over the lengthwise seam of the outer flaps. This method also serves as the closure. Sealing is not required.

A.2.1.1.2 Type I, styles B and C.

Type I, styles B and C packs should be centrally reinforced with one fully encircling band of 13 mm (1/2 inch) wide tape conforming to ASTM D5330/D5330M, type III or specified tapes in ASTM D5118/5118M, or 6 mm (1/4 inch) nonmetallic strapping conforming to ASTM D3950 with a minimum tensile strength of 1790 N (400 lbs_f). This method serves as the closure. Sealing is not required.

A.2.1.1.3 Type II, styles D and E.

In the manner specified in A.2.1.1.1 for type I, style A, seal all open seams and manufacturer's joints with tape, 50 mm (2 inches) in width, and should conform to ASTM D5330/D5330M, type III or specified tapes in ASTM D5118/5118M. This method also serves as the closure.

A.2.1.1.5 Type III, style G.

Type III, style G packs should be reinforced with fully encircling bands of 13 mm (1/2 inch) wide tape conforming to ASTM D5330/D5330M or specified tapes in ASTM D5118/5118M or 6 mm (1/4 inch) nonmetallic strapping conforming to ASTM D3950 with a minimum tensile strength of 1790 N (400 lbs_f). Two bands should be positioned 155 mm (6 inches) from the ends over the top, bottom, and sides. Add one lengthwise band over the top, bottom, and ends for XE9 and XF1 Fast Packs. This method serves as the closure. Sealing is not required.

A.2.1.1.6 Type IV, style B.

Reinforcement should be as specified in A.2.1.1.4, except the lengthwise band does not apply. This method serves as the closure. Sealing is not required.

A.2.1.2 Less than level B packing (see figure A-2).

See MIL-STD-2073-1 for guidance.

A.2.1.2.1 Type I, style A.

Type I, style A packs should be closed with minimum 50 mm (2 inches) in width, and conforming to ASTM D5330/D5330M or specified tapes in ASTM D5118/5118M. Center the tape over the seam formed by the closure of the outer flaps of the top and extend the tape down over the end panels not less than 50 mm (2 inches).

A.2.1.2.2 Type I, styles B and C.

Type I, styles B and C should be reinforced as specified in A.2.1.1.2 or a 6 mm (1/4 inch) nonmetallic strapping conforming to ASTM D3950 with a minimum tensile strength of 716 N (160 lbs_f). This method serves as the closure. Sealing is not required.

A.2.1.2.3 Type II, styles D and E.

Type II, style D packs should be reinforced with one fully encircling band of 13 mm (1/2 inch) wide tape conforming to ASTM D5330/D5330M or specified tapes in ASTM D5118/5118M or a 6 mm (1/4 inch) nonmetallic strapping conforming to ASTM D3950 with a minimum tensile strength of 716 N (160 lbs_f). Place the band lengthwise and center over the top, bottom and ends (between the words "PUSH" and “OPEN"). This method serves as the closure. Sealing is not required.

A.2.1.2.5 Type III, style G.

Type III, style G packs should be reinforcement as specified in A.2.1.1.4, or a 6 mm (1/4 inch) nonmetallic strapping conforming to ASTM D3950 with a minimum tensile strength of 716 N (160 lbs_f). This method serves as the closure. Sealing is not required.

A.2.1.2.6 Type IV, style B.

Reinforcement of type IV, style B packs should be as specified in A.2.1.1.5, or a 6 mm (1/4 inch) nonmetallic strapping conforming to ASTM D3950 with a minimum tensile strength of 716 N (160 lbs_f) and the lengthwise band should not apply. This method serves as the closure. Sealing is not required.

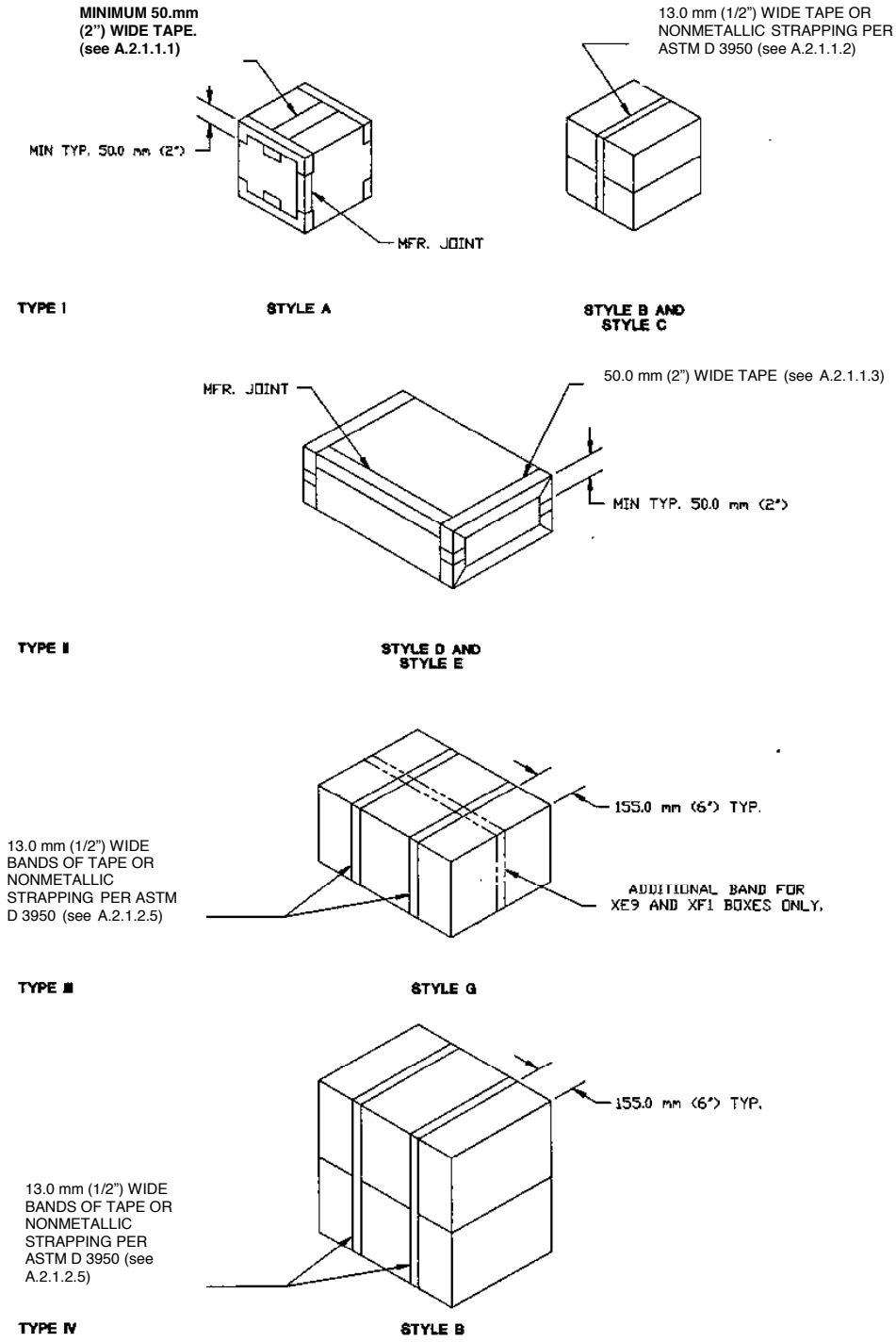

FIGURE A-1. Closure of fast-pack boxes for Level B packing.

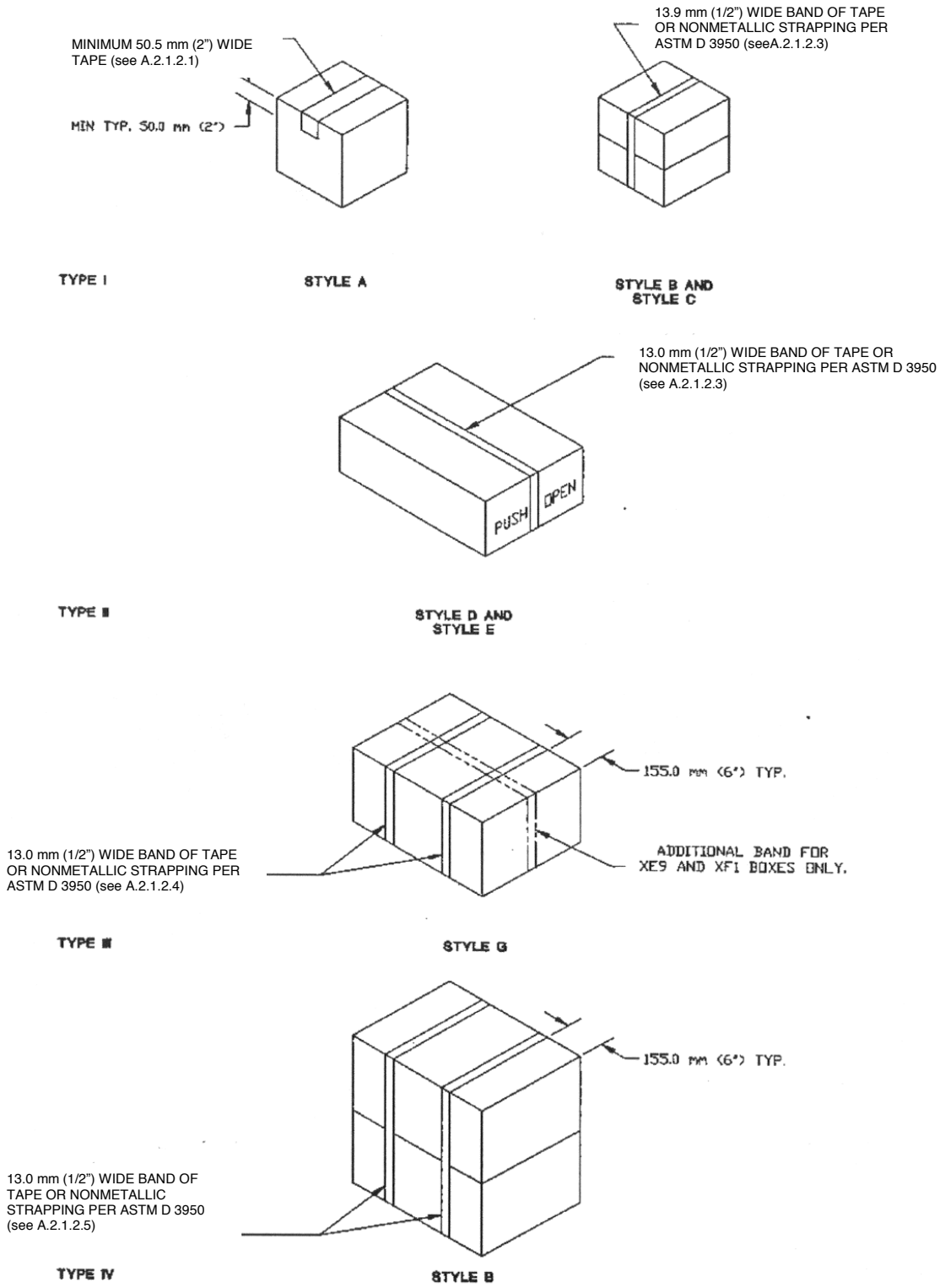

FIGURE A-2. Closure of fast-pack boxes for less than level B packing.

A.2.2 Opening of fast packs.

To open the fast-pack boxes, cut the closure and reinforcing tape with a shallow knife at a minimum number of seam locations which will permit opening and preclude any damage to the box. Do not remove totally adhered tape.

A.2.3 Reuse of fast packs.

In reusing of Fast Packs, the following procedures should be observed:

a. Surfaces to which tape for closure or reinforcement is to be applied must be free of loose soil, oil, or grease. These surfaces should be wiped clean prior to application of tape.

b. Tape applied to reused containers should be applied directly over the existing tape.

c. Loose ends of existing tape should be cut off, not torn loose. Tearing the tape from the box damages the box surface and weakens the container walls.

A.2.4 Field inspection

Inspect new and reused boxes for shipment and storage only to determine compliance with the tape closure and reinforcing (tape banding) requirements of this appendix. Conduct sampling in accordance with the provisions of ASQ Z1.4. For product conformance provisions and delivery to this document refer to sections 5 and 6.

A.2.4.1 Inspection for tape closure and banding.

Classification of defects should be as specified in table A-II. Sample unit for this examination should be one complete box. Lot size should be expressed in terms of sample units. The inspection level should be S-3.

TABLE A-II. Examination for tape closure and banding.

EXAMINE	DEFECT
Taping (sealing or banding, as applicable)	No type, class, or size specified (see A.2.1). Not applied as specified. Missing strip. Loose strip. Torn or cut strip (permitted on reused boxes).

CONCLUDING MATERIAL

MILITARY INTEREST:

Custodians:
Army - SM
Navy - AS
Air Force - 11

Review Activities:
Army – CR
Navy - SA
Air Force – 70, 71, 84, 99

CIVILIAN COORDINATING ACTIVITY - FSS

Preparing Activity:
Air Force - 11

Project No. 8115-0610

THIS PAGE INTENTIONALLY LEFT BLANK.

STANDARDIZATION DOCUMENT IMPROVEMENT PROPOSAL

INSTRUCTIONS

1. The preparing activity must complete blocks 1, 2, 3, and 8. In block 1, both the document number and revision letter should be given.
2. The submitter of this form must complete blocks 4, 5, 6, and 7, and send to preparing activity.
3. The preparing activity must provide a reply within 30 days from receipt of the form.

NOTE: This form may not be used to request copies of documents, nor to request waivers, or clarification of requirements on current contracts. Comments submitted on this form do not constitute or imply authorization to waive any portion of the referenced document(s) or to amend contractual requirements.

I RECOMMEND A CHANGE:

1. DOCUMENT NUMBER A-A-59736

2. DOCUMENT DATE (YYYYMMDD) 2003 JANUARY 22

3. DOCUMENT TITLE BOXES, SHIPPING, REUSABLE WITH CUSHIONING

4. NATURE OF CHANGE *(Identify paragraph number and include proposed rewrite, if possible. Attach extra sheets as needed.)*

5. REASON FOR RECOMMENDATION

6. SUBMITTER

a. NAME *(Last, First, Middle Initial)*

b. ORGANIZATION

c. ADDRESS *(Include Zip Code)*

d. TELEPHONE (Include Area Code)
(1) Commercial
(2) AUTOVON *(if applicable)*

7.DATE SUBMITTED (YYYYMMDD)

8. PREPARING ACTIVITY

a. NAME
ASC/ENOI (AF 11)

b. TELEPHONE *Include Area Code)*
(1) Commercial 937-255-6282
(2) AUTOVON 785-6282

c. ADDRESS *(Include Zip Code)*
2530 LOOP ROAD WEST BLDG 560
WRIGHT-PATTERSON AFB OH 45433-7101
EngineeringStandards@wpafb.af.mil

IF YOU DO NOT RECEIVE A REPLY WITHIN 45 DAYS, CONTACT:
Defense Standardization Program Office (DLSC-LM)
8725 John J. Kingman road, Suite 2533 Ft. Belvoir, VA 22060-2533
Telephone (703) 767-6888 AUTOVON 427-6888