Downloaded from http://www.everyspec.com

INCH-POUND

A-A-59650B
8 September 2011
SUPERSEDING
A-A-59650A
22 May 2006

COMMERCIAL ITEM DESCRIPTION

BEARINGS, ROLLER, TAPERED, SINGLE ROW, NORMAL ANGLE, FLANGED CUP (TYPE TSF)

The General Services Administration has authorized the use of this commercial item description for all federal agencies.

1. SCOPE. This commercial item description (CID) covers government acquisition requirements for complete (cone with rollers and cup) single row, tapered, roller bearings with normal angle, flanged cup (type TSF) for general-purpose use. These bearings are not intended for use in special precision applications such as on aircraft, precision ordnance, or submarine equipment.

2. CLASSIFICATION. The roller bearings shall be of one type (TSF) and classified by the size codes listed in table I. The column headings in table I refer to bearing characteristics defined in figure 1.

Beneficial comments, recommendations, additions, deletions, clarifications, etc. and any data that may improve this document should be sent to: STDZNMGT@dla.mil or DLA Aviation VEB, 8000 Jefferson Davis Highway, Richmond, VA 23297-5616. Since contact information can change, you may want to verify the currency of this address information using the ASSIST database at https://assist.daps.dla.mil/.

Downloaded from http://www.everyspec.com

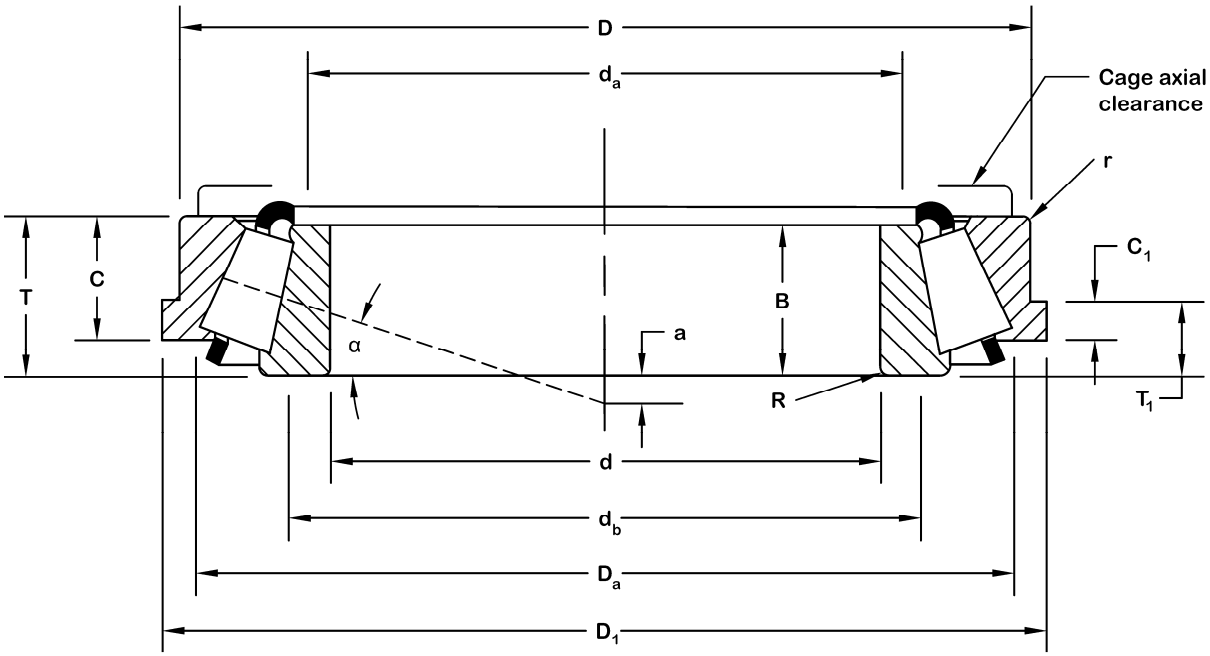

FIGURE 1. Bearing characteristics.

Downloaded from http://www.everyspec.com

TABLE I. Size codes and dimensions.

Size code [1]	Part number [2]	d	D	T	T_1	B	C	R [3]	D_1	C_1	d_b	d_a	D_a	K factor	Basic dynamic load ratings (lb.)	a [4]
		Bore	Outside diameter	Bearing width	Standout	Cone width	Cup width	Max. shaft fillet radius	Flange		Backing shoulder diameters					Effective load center
	Cone-cup								Diameter	Width	Shaft		Housing		Radial	
001	A4050 - A4138-B	0.5000	1.3775	0.4330	0.1823	0.4326	0.3437	0.05	1.4985	0.0930	0.73	0.67	1.32	1.29	2100	-0.10
002	A4059 - A4138-B	0.5906	1.3775	0.4330	0.1823	0.4326	0.3437	0.03	1.4985	0.0930	0.77	0.75	1.32	1.29	2100	-0.10
003	17580 - 17520-B	0.6250	1.6875	0.6563	0.2500	0.6563	0.5315	0.06	1.8085	0.1250	0.91	0.83	1.59	1.76	5100	-0.23
004	05062 - 05185-B	0.6250	1.8504	0.5662	0.2377	0.5662	0.4375	0.06	2.0024	0.1090	0.93	0.83	1.75	1.64	4400	-0.16
005	A6075 - A6157-B	0.7500	1.5745	0.4730	0.1910	0.4391	0.3750	0.04	1.6955	0.0930	0.94	0.91	1.50	1.11	2200	-0.06
006	09067 - 09195-A-B	0.7500	1.9380	0.7100	0.2755	0.7500	0.5625	0.05	2.0898	0.1280	1.00	0.94	1.83	2.20	6900	-0.29
007	1380 - 1328-B	0.8750	2.0625	0.7625	0.3560	0.7940	0.5625	0.06	2.2147	0.1560	1.16	1.06	1.97	2.00	7800	-0.30
008	1779 - 1729-B	0.9375	2.2400	0.7625	0.2935	0.7810	0.6250	0.03	2.3920	0.1560	1.16	1.12	2.09	1.90	7300	-0.27
009	3659 - 3620-B	0.9375	2.4375	1.1250	0.3750	1.1975	0.9375	0.09	2.6209	0.1875	1.40	1.24	2.32	2.07	14200	-0.47
010	07100 - 07196-B	1.0000	1.9687	0.5313	0.2657	0.5614	0.3750	0.04	2.1209	0.1094	1.20	1.16	1.93	1.45	4800	-0.11
011	07100 - 07204-B	1.0000	2.0470	0.5910	0.2000	0.5614	0.5000	0.04	2.1990	0.1090	1.20	1.16	1.97	1.45	4800	-0.11
012	1718 - 1729-B	1.0000	2.2400	0.7625	0.2935	0.7810	0.6250	0.03	2.3920	0.1560	1.20	1.18	2.09	1.90	7300	-0.27
013	15101 - 15250-B	1.0000	2.5000	0.8125	0.3437	0.8125	0.6250	0.03	2.6522	0.1562	1.28	1.24	2.36	1.67	8200	-0.23
014	15580 - 15520-B	1.0625	2.2500	0.6875	0.3125	0.6875	0.5313	0.14	2.4022	0.1563	1.52	1.26	2.17	1.69	7500	-0.20
015	15590 - 15520-B	1.1250	2.2500	0.6875	0.3125	0.6875	0.5313	0.14	2.4022	0.1563	1.56	1.32	2.17	1.69	7500	-0.20
016	1985 - 1931-B	1.1250	2.3750	0.7813	0.3125	0.7620	0.6250	0.03	2.5270	0.1562	1.34	1.32	2.24	1.77	8300	-0.23
017	02474 - 02420-B	1.1250	2.6875	0.8750	0.3437	0.8750	0.6875	0.03	2.8397	0.1562	1.44	1.42	2.56	1.40	10400	-0.20
018	3198 - 3120-B	1.1250	2.8593	1.1875	0.4375	1.1810	0.9375	0.05	3.0433	0.1875	1.54	1.46	2.72	1.76	15200	-0.40
019	17119 - 17244-B	1.1875	2.4409	0.6300	0.2075	0.6522	0.5625	0.06	2.5930	0.1400	1.46	1.36	2.32	1.53	7000	-0.14
020	02476 - 02420-B	1.2500	2.6875	0.8750	0.3437	0.8750	0.6875	0.03	2.8397	0.1562	1.54	1.52	2.32	1.40	10400	-0.20
021	02475 - 02420-B	1.2500	2.6875	0.8750	0.3437	0.8750	0.6875	0.14	2.8397	0.1562	1.75	1.52	2.56	1.40	10400	-0.20

[1] For each code size code there are 3 options for the PIN (see 7.1): Add a code A for cone only or a code B for cup only, use no code if for a whole bearing assembly.
[2] Part numbers are for reference only. Part numbers reflect the cup and cone numbers used by industry and the ABMA. Some cones and cups may be used in multiple configurations and are not limited to one bearing assembly.
[3] These maximum fillet radii shall be cleared by the bearing corners.
[4] Minus value indicates load center inside cone backface.

Downloaded from http://www.everyspec.com

TABLE I. Size codes and dimensions.

Size code [1]	Part number [2]	d	D	T	T_1	B	C	R [3]	D_1	C_1	d_b	d_a	D_a	K factor	Basic dynamic load ratings (lb.)	a [4]
		Bore	Outside diameter	Bearing width	Standout	Cone width	Cup width	Max. shaft fillet radius	Flange		Backing shoulder diameters					Effective load center
	Cone-cup								Diameter	Width	Shaft		Housing		Radial	
022	2580 - 2523-B	1.2500	2.7500	0.9375	0.3435	0.9983	0.7500	0.03	2.9020	0.1560	1.52	1.48	2.60	2.14	13500	-0.34
023	2581 - 2523-B	1.3125	2.7500	0.9375	0.3435	0.9983	0.7500	0.03	2.9020	0.1560	1.56	1.54	2.60	2.14	13500	-0.34
024	2585 - 2523-B	1.3125	2.7500	0.9375	0.3435	0.9983	0.7500	0.14	2.9020	0.1560	1.77	1.54	2.60	2.14	13500	-0.34
025	3196 - 3120-B	1.3125	2.8593	1.1875	0.4375	1.1810	0.9375	0.14	3.0433	0.1875	1.85	1.59	2.72	1.76	15200	-0.40
026	31594 - 31520-B	1.3750	3.0000	1.1563	0.4063	1.1250	0.9375	0.06	3.1836	0.1875	1.81	1.71	2.91	1.45	15200	-0.30
027	31597 - 31520-B	1.4375	3.0000	1.1563	0.4063	1.1250	0.9375	0.14	3.1836	0.1875	2.01	1.75	2.91	1.45	15200	-0.30
028	13889 - 13836-B	1.5000	2.5625	0.5000	0.2340	0.4688	0.3750	0.06	2.6835	0.1090	1.77	1.67	2.48	1.69	4500	-0.03
029	19150 - 19268-B	1.5000	2.6875	0.6250	0.2968	0.6504	0.4688	0.06	2.8397	0.1406	1.77	1.69	2.64	1.31	8300	-0.06
030	19150 - 19283-B	1.5000	2.8346	0.6700	0.2475	0.6504	0.5625	0.06	2.9865	0.1400	1.77	1.69	2.68	1.31	8300	-0.06
031	16150 - 16484-B	1.5000	2.8440	0.8125	0.3438	0.8125	0.6250	0.14	2.9960	0.1563	1.95	1.69	2.72	1.45	9200	-0.16
032	3490 - 3420-B	1.5000	3.1250	1.1563	0.4063	1.1721	0.9375	0.14	3.3090	0.1875	2.05	1.80	2.99	1.60	16800	-0.34
033	28150 - 28315-B	1.5000	3.1496	0.8270	0.0583	0.8244	0.6250	0.06	3.3015	0.1563	1.79	1.71	2.87	1.45	16000	-0.19
034	3382 - 3320-B	1.5625	3.1562	1.1563	0.4063	1.1965	0.9375	0.14	3.3396	0.1875	2.05	1.79	3.03	2.14	18500	-0.43
035	11162 - 11300-B	1.6250	3.0000	0.7090	0.2871	0.6844	0.5625	0.06	3.1836	0.1406	1.93	1.83	2.87	1.20	7800	-0.03
036	26882 - 26822-B	1.6250	3.1250	0.9375	0.3438	0.1000	0.7500	0.14	3.2772	0.1563	2.13	1.85	2.99	1.83	14700	-0.29
037	3877 - 3820-B	1.6250	3.3750	1.1875	0.4375	1.1875	.9375	0.14	3.5270	0.1875	2.24	1.98	3.27	1.45	2.0000	-0.32
038	LL103049 - LL103010-B	1.7500	2.8125	0.5000	0.2350	0.5000	0.3750	0.06	2.9225	0.1100	2.01	1.91	2.72	1.91	5900	-0.05
039	L102849 - L102810-B	1.7500	2.8750	0.7188	0.2500	0.7188	0.5938	0.06	3.0000	0.1250	2.01	1.93	2.80	1.83	9300	-0.15
040	3578 - 3525-B	1.7500	3.4375	1.1875	0.4370	1.2160	0.9375	0.14	3.6215	0.1870	2.24	2.01	3.23	1.91	18100	-0.40
041	49175 - 49368-B	1.7500	3.6875	1.2500	4.6885	1.2500	1.0000	0.14	3.9073	0.2188	2.32	2.09	3.50	1.62	22000	-0.36
042	438 - 432-B	1.7500	3.7500	1.0938	0.4376	1.1772	0.8750	0.14	3.9640	0.2188	2.24	2.01	3.43	2.05	20500	-0.36

[1] For each code size code there are 3 options for the PIN (see 7.1): Add a code A for cone only or a code B for cup only, use no code if for a whole bearing assembly.
[2] Part numbers are for reference only. Part numbers reflect the cup and cone numbers used by industry and the ABMA. Some cones and cups may be used in multiple configurations and are not limited to one bearing assembly.
[3] These maximum fillet radii shall be cleared by the bearing corners.
[4] Minus value indicates load center inside cone backface.

Downloaded from http://www.everyspec.com

TABLE I. Size codes and dimensions.

Size code [1]	Part number [2]	d	D	T	T_1	B	C	R [3]	D_1	C_1	d_b	d_a	D_a	K factor	Basic dynamic load ratings (lb.)	a [4]
		Bore	Outside diameter	Bearing width	Standout	Cone width	Cup width	Max. shaft fillet radius	Flange		Backing shoulder diameters					Effective load center
	Cone-cup								Diameter	Width	Shaft		Housing		Radial	
043	18690 - 18620-B	1.8125	3.1250	0.6875	0.2968	0.6875	0.5313	0.11	3.3086	0.1406	2.20	2.01	3.03	1.56	8500	-0.08
044	25592 - 25521-B	1.8125	3.2700	0.9375	0.3438	1.0000	0.7500	0.14	3.4220	0.1563	2.28	2.05	3.15	1.74	14500	-0.25
045	359-S - 354-B	1.8125	3.3465	0.8125	0.3125	0.8540	0.6875	0.09	3.5299	0.1875	2.17	2.01	3.23	1.91	13300	-0.19
046	2984 - 2924-B	1.8125	3.3465	1.0000	0.3750	1.0082	0.8125	0.14	3.5340	0.1875	2.28	2.05	3.23	1.69	15100	-0.25
047	436 - 432-B	1.8125	3.7500	1.0938	0.4376	1.1772	0.8750	0.14	3.9640	0.2188	2.32	2.05	3.43	2.05	20500	-0.36
048	65390 - 65320-B	1.9375	4.5000	1.7500	0.6563	1.7500	1.3750	0.14	4.7772	0.2813	2.76	2.36	4.21	1.36	35700	-0.49
049	L305649 - L305610-B	2.0000	3.1875	0.7188	0.2813	1.7188	0.5625	0.06	3.3085	0.1250	2.28	2.20	3.07	1.64	9900	-0.10
050	18790 - 18720-B	2.0000	3.3465	0.6875	0.2968	0.6875	0.5313	0.14	3.4870	0.1406	2.44	2.20	3.23	1.44	8500	-0.03
051	368A - 362-B	2.0000	3.5433	0.7874	0.3499	0.8750	0.6250	0.14	3.7268	0.1875	2.44	2.20	3.39	1.83	14000	-0.17
052	3780 - 3720-B	2.0000	3.6718	1.1875	0.4375	1.1930	0.9375	0.14	3.8558	0.1875	2.52	2.28	3.54	1.73	19700	-0.32
053	49585 - 49520-B	2.0000	4.0000	1.2500	0.4688	1.2500	1.0000	0.14	4.2148	0.2188	2.60	2.32	3.86	1.46	21300	-0.28
054	529 - 522-B	2.0000	4.0000	1.3750	0.5625	1.4200	1.0625	0.03	4.2460	0.2500	2.32	2.28	3.82	2.05	26400	-0.50
055	529X - 522-B	2.0000	4.0000	1.3750	0.5625	1.4200	1.0625	0.14	4.2460	0.2500	2.56	2.28	3.82	2.05	26400	-0.50
056	65395 - 65320-B	2.0000	4.5000	1.7500	0.6563	1.7500	1.3750	0.14	4.7772	0.2813	2.83	2.36	4.21	1.36	35700	-0.49
057	28584 - 28521-B	2.0625	3.6250	0.9688	0.3437	1.0000	0.7813	0.14	3.7772	0.1582	2.56	2.28	3.50	1.55	16000	-0.19
058	33895 - 33820-B	2.1250	3.6718	1.0938	0.4063	1.1250	0.8750	0.06	3.8558	0.1875	2.48	2.36	3.58	1.77	20900	-0.30
059	539 - 532-B	2.1250	4.3750	1.5000	0.5625	1.4550	1.1875	0.14	4.6210	0.2500	2.68	2.40	3.94	1.97	27600	-0.48
060	621 - 612-B	2.1250	4.7500	1.6250	0.6562	1.6250	1.2500	0.14	5.0272	0.2812	2.76	2.48	4.33	1.86	33200	-0.55
061	L507949 - L507910-B	2.2500	3.4375	0.7188	0.2813	0.7188	0.5625	0.06	3.5625	0.1250	2.56	2.44	3.35	1.50	9400	-0.03
062	387A - 382-B	2.2500	3.8125	0.8268	0.3125	0.8640	0.7018	0.14	3.9960	0.1875	2.72	2.44	3.70	1.65	14800	-0.12
063	28682 - 28622-B	2.2500	3.8437	0.9688	0.3592	0.9688	0.7656	0.14	3.9960	0.1560	2.76	2.48	3.70	1.45	16800	-0.13

[1] For each code size code there are 3 options for the PIN (see 7.1): Add a code A for cone only or a code B for cup only, use no code if for a whole bearing assembly.
[2] Part numbers are for reference only. Part numbers reflect the cup and cone numbers used by industry and the ABMA. Some cones and cups may be used in multiple configurations and are not limited to one bearing assembly.
[3] These maximum fillet radii shall be cleared by the bearing corners.
[4] Minus value indicates load center inside cone backface.

Downloaded from http://www.everyspec.com

TABLE I. Size codes and dimensions.

Size code [1]	Part number [2]	d	D	T	T_1	B	C	R [3]	D_1	C_1	d_b	d_a	D_a	K factor	Basic dynamic load ratings (lb.)	a [4]
		Bore	Outside diameter	Bearing width	Standout	Cone width	Cup width	Max. shaft fillet radius	Flange		Backing shoulder diameters					Effective load center
	Cone-cup								Diameter	Width	Shaft		Housing		Radial	
064	469 - 453-B	2.2500	4.2500	1.0938	0.4376	1.1542	0.8750	0.14	4.4640	0.2188	2.76	2.48	3.94	1.74	21800	-0.28
065	623 - 612-B	2.2500	4.7500	1.6250	0.6562	1.6250	1.2500	0.14	5.0272	0.2812	2.83	2.60	4.33	1.86	33200	-0.55
066	555S - 552-B	2.2500	4.8750	1.5000	0.5625	1.4440	1.1875	0.14	5.1210	0.2500	2.87	2.64	4.57	1.69	30700	-0.37
067	28985 - 28921-B	2.3750	3.9370	1.0000	0.3750	1.0000	0.7813	0.14	4.0930	0.1563	2.87	2.64	3.86	1.37	17200	-0.10
068	65237 - 65500-B	2.3750	5.0000	1.7500	0.6563	1.7500	1.3750	0.14	5.2772	0.2813	3.23	2.79	4.72	1.20	33300	-0.37
069	39250 - 39412-B	2.5000	4.1250	0.8438	0.4063	0.8661	0.6250	0.08	4.3084	0.1875	2.87	2.72	4.02	1.51	15800	-0.06
070	29585 - 29520-B	2.5000	4.2500	1.0000	0.4063	1.0000	0.7500	0.14	4.4022	0.1563	3.03	2.80	4.13	1.27	14200	-0.03
071	390A - 394A-B	2.5000	4.3307	0.8661	0.3120	0.8660	0.7411	0.06	4.5147	0.1870	2.87	2.76	4.17	1.45	16200	-0.03
072	29585 - 29521-B	2.5000	4.3307	1.0000	0.4063	1.0000	0.7500	0.14	4.4803	0.1563	3.03	2.80	4.13	1.27	14200	-0.03
073	3984 - 3920-B	2.5000	4.8125	1.1875	0.4375	1.1830	0.9375	0.14	4.6210	0.1875	3.03	2.80	4.25	1.45	22400	-0.18
074	5595 - 5535-B	2.5938	4.8125	1.7188	0.5313	1.7230	1.4375	0.14	5.0625	0.2500	3.27	3.03	4.65	1.27	14200	-0.48
075	29590 - 29520-B	2.6250	4.2500	1.0000	0.4063	1.0000	0.7500	0.14	4.4022	0.1563	3.15	2.87	4.13	1.27	14200	-0.03
076	395A - 394A-B	2.6250	4.3307	0.8661	0.3120	0.8660	0.7411	0.03	4.5147	0.1870	2.87	2.87	4.17	1.45	16200	-0.03
077	395-S - 394A-B	2.6250	4.3307	0.8661	0.3120	0.8660	0.7411	0.14	4.5147	0.1870	3.11	2.87	4.17	1.45	16200	-0.03
078	29590 - 29521-B	2.6250	4.3307	1.0000	0.4063	1.0000	0.7500	0.14	4.4803	0.1563	3.15	2.87	4.13	1.27	14200	-0.03
079	3984 - 3920-B	2.6250	4.4375	1.1875	0.4375	1.1830	0.9375	0.14	4.6210	0.1875	3.15	2.91	4.25	1.45	22400	-0.18
080	39590 - 39520-B	2.6250	4.4375	1.1875	0.4688	1.1875	0.9375	0.14	4.6523	0.2188	3.15	2.91	4.33	1.72	27000	-0.26
081	641 - 632-B	2.6250	5.3750	1.6250	0.6560	1.6250	1.2500	0.14	5.6520	0.2810	3.27	3.03	4.92	1.61	37400	-0.44
082	399A - 394A-B	2.6875	4.3307	0.8661	0.3120	0.8660	0.7411	0.09	4.5147	0.1870	3.07	2.91	4.17	1.45	16200	-0.03
083	560-S - 552-B	2.6875	4.8750	1.5000	0.5625	1.1440	1.1875	0.14	5.1210	0.2500	3.27	2.99	4.57	1.69	30.700	-0.37
084	H715343 - H715310-B	2.6875	5.5000	1.8125	0.6875	1.8125	1.4375	0.14	6.0000	0.3125	3.54	3.31	5.31	1.24	43000	-0.34

[1] For each code size code there are 3 options for the PIN (see 7.1): Add a code A for cone only or a code B for cup only, use no code if for a whole bearing assembly.
[2] Part numbers are for reference only. Part numbers reflect the cup and cone numbers used by industry and the ABMA. Some cones and cups may be used in multiple configurations and are not limited to one bearing assembly.
[3] These maximum fillet radii shall be cleared by the bearing corners.
[4] Minus value indicates load center inside cone backface.

Downloaded from http://www.everyspec.com

TABLE I. Size codes and dimensions.

Size code [1]	Part number [2]	d	D	T	T_1	B	C	R [3]	D_1	C_1	d_b	d_a	D_a	K factor	Basic dynamic load ratings (lb.)	a [4]
		Bore	Outside diameter	Bearing width	Standout	Cone width	Cup width	Max. shaft fillet radius	Flange		Backing shoulder diameters					Effective load center
	Cone-cup								Diameter	Width	Shaft		Housing		Radial	
085	29675 - 29620-B	2.7500	4.4375	1.0000	0.4063	1.0000	0.7500	0.06	4.5900	0.1563	3.15	3.03	4.33	1.20	18000	-0.04
086	LM613449 - LM613410-B	2.7500	4.4375	0.8750	0.4375	0.8660	0.6250	0.06	4.6875	0.1875	3.07	2.99	4.33	1.40	16400	-0.00
087	482 - 472-B	2.7500	4.7244	1.1730	0.4368	1.1420	0.9542	0.14	4.9384	0.2180	3.27	3.03	4.53	1.52	23100	-0.16
088	H414249 - H414210-B	2.8125	5.3750	1.6250	0.6550	1.6250	1.2500	0.14	5.6550	0.2800	3.50	3.27	5.12	1.62	41800	-0.43
089	644 - 632-B	2.8125	5.3750	1.6250	0.6560	1.6250	1.2500	0.14	5.6520	0.2810	3.43	3.19	4.92	1.61	37400	-0.44
090	33287 - 33462-B	2.8750	4.6250	1.1875	0.4375	1.1875	0.9375	0.14	4.8084	0.1875	3.43	3.15	4.49	1.34	22300	-0.11
091	567 - 563-B	2.8750	5.0000	1.4375	0.5625	1.4240	1.1250	0.14	5.2460	0.2500	3.46	3.19	4.76	1.69	30700	-0.32
092	42688 - 42620-B	3.0000	5.0000	1.1875	0.5313	1.2205	0.8750	0.25	5.2460	0.2188	3.78	3.31	4.88	1.39	26100	-0.11
094	6461A - 6420-B	3.0000	5.8750	2.1250	0.6875	2.1350	1.7500	0.38	6.1835	0.3125	4.25	3.52	5.51	1.61	55100	-0.59
095	LM814849 - LM814810-B	3.0625	4.6250	1.0000	0.4375	1.0000	0.7500	0.14	4.8084	0.1875	3.58	3.35	4.57	1.15	19200	-0.09
096	34306 - 34478-B	3.0625	4.7812	0.9688	0.4688	0.9060	0.6875	0.14	4.9648	0.1875	3.54	3.31	4.65	1.15	19200	-0.06
097	42690 - 42620-B	3.0625	5.0000	1.1875	0.5313	1.2205	0.8750	0.14	5.2460	0.2188	3.58	3.35	4.88	1.39	26100	-0.11
098	H715348 - H715310-B	3.0625	5.5000	1.8125	0.6875	1.8125	1.4375	0.14	6.0000	0.3125	3.86	3.48	5.31	1.24	43000	-0.34
099	L116149 - L116110-B	3.2500	4.5625	0.8125	0.3125	0.8438	0.6563	0.06	4.7187	0.1563	3.54	3.46	4.45	1.90	8700	-0.05
100	47686 - 47620-B	3.2500	5.2500	1.3125	0.5000	1.3125	1.0313	0.14	5.4650	0.2188	3.82	3.54	5.12	1.44	29100	-0.17
101	580 - 572-B	3.2500	5.5115	1.4375	0.5625	1.4212	1.1250	0.14	5.7575	0.2500	3.86	3.58	5.28	1.45	29800	-0.21
102	663 - 652-B	3.2500	6.0000	1.6250	0.6562	1.6250	1.2500	0.14	6.2772	0.2812	3.90	3.62	5.55	1.43	39600	-0.31
103	497 - 493-B	3.3750	5.3750	1.1875	0.5305	1.1720	0.8750	0.14	5.5890	0.2180	3.90	3.66	5.16	1.31	25000	-0.03
104	665 - 652-B	3.3750	6.0000	1.6250	0.0562	1.6250	1.2500	0.14	6.2772	0.2812	4.02	3.74	5.55	1.43	39600	-0.31
105	841 - 832-B	3.3750	6.6250	2.1250	0.8750	2.2190	1.6250	0.14	6.9960	0.3750	4.09	3.82	6.10	1.95	65100	-0.73
106	759 - 752-B	3.5000	6.3750	1.8750	0.6870	1.9000	1.5000	0.14	6.6830	0.3120	4.17	3.90	5.91	1.71	52300	-0.47

[1] For each code size code there are 3 options for the PIN (see 7.1): Add a code A for cone only or a code B for cup only, use no code if for a whole bearing assembly.
[2] Part numbers are for reference only. Part numbers reflect the cup and cone numbers used by industry and the ABMA. Some cones and cups may be used in multiple configurations and are not limited to one bearing assembly.
[3] These maximum fillet radii shall be cleared by the bearing corners.
[4] Minus value indicates load center inside cone backface.

Downloaded from http://www.everyspec.com

TABLE I. Size codes and dimensions.

Size code [1]	Part number [2]	d	D	T	T_1	B	C	R [3]	D_1	C_1	d_b	d_a	D_a	K factor	Basic dynamic load ratings (lb.)	a [4]
		Bore	Outside diameter	Bearing width	Standout	Cone width	Cup width	Max. shaft fillet radius	Flange		Backing shoulder diameters					Effective load center
	Cone-cup								Diameter	Width	Shaft		Housing		Radial	
107	6580 - 6535-B	3.5000	6.3750	2.1250	0.7500	2.1693	1.6875	0.14	6.7500	0.3125	4.29	4.01	6.10	1.46	51900	-0.52
108	850 - 832-B	3.5000	6.6250	2.1250	0.8750	2.1290	1.6250	0.14	6.9960	0.3750	4.17	3.94	6.10	1.95	65100	-0.73
109	760 - 752-B	3.5625	6.3750	1.8750	0.6870	1.9000	1.5000	0.14	6.6830	0.3120	4.21	3.98	5.91	1.71	52300	-0.47
110	47890 - 47825-B	3.6250	5.6250	1.3125	0.5937	1.3750	1.0313	0.14	5.8710	0.3125	4.21	3.98	5.59	1.30	31800	-0.04
111	47896 - 47825-B	3.7500	5.6250	1.3125	0.5937	1.3750	1.0313	0.14	5.8710	0.3125	4.33	4.06	5.59	1.30	31800	-0.04
112	594 - 592-B	3.7500	6.0000	1.5625	0.6250	1.4300	1.1875	0.14	6.2460	0.2500	4.33	4.09	5.67	1.32	34800	-0.10
113	594A - 592-B	3.7500	6.0000	1.5625	0.6250	1.4300	1.1875	0.20	6.2460	0.2500	4.45	4.09	5.67	1.32	34800	-0.10
114	77375 - 77675-B	3.7500	6.7500	1.8750	0.6875	1.9000	1.5000	0.14	7.0584	0.3125	4.45	4.17	6.34	1.59	54300	-0.38
115	42381 - 42587-B	3.8125	5.8750	1.2500	0.5000	1.1406	0.9688	0.14	6.0898	0.2188	4.33	4.09	5.98	1.19	26400	0.12
116	52400 - 52637-B	4.0000	6.3750	1.4375	0.6562	1.4219	1.0313	0.14	6.6210	0.2500	4.61	4.37	6.10	1.23	36100	-0.01
117	687 - 672-B	4.0000	6.6250	1.6250	0.7187	1.6250	1.1875	0.14	6.9030	0.2812	4.65	4.41	6.30	1.24	39800	-0.11
118	861 - 854-B	4.0000	7.5000	2.2500	0.8750	2.2650	1.7500	0.31	7.8710	0.3750	5.08	4.49	6.85	1.74	73200	-0.60
119	HH221449 - HH221410-B	4.0000	7.5000	2.2500	0.8750	2.2650	1.8125	0.31	7.8710	0.4375	5.16	4.56	7.05	1.74	85200	-0.59
120	941 - 932-B	4.0000	8.3750	2.6250	0.9375	2.6250	2.1250	0.28	8.8085	0.4375	5.12	4.61	7.83	1.79	83300	-0.78
121	782 - 772-B	4.1250	7.1250	1.8750	0.6875	1.8900	1.5000	0.14	7.4330	0.3125	4.80	4.57	6.61	1.51	51400	-0.32
122	56425 - 56650-B	4.2500	6.5000	1.4375	0.6250	1.4375	1.0625	0.14	6.7460	0.2500	4.84	4.61	6.38	1.18	36600	0.08
123	64450 - 64700-B	4.5000	7.0000	0.9062	0.7188	1.6250	1.1875	0.14	7.2772	0.2813	5.16	4.92	6.85	1.13	44300	0.05
124	71450 - 71750-B	4.5000	7.5000	1.8750	0.8125	1.9375	1.3750	0.14	7.8080	0.3125	5.20	4.92	7.13	1.40	58300	-0.26
125	938 - 932-B	4.5000	8.3750	2.6250	0.9375	2.6250	2.1250	0.28	8.8085	0.4375	5.55	5.04	7.83	1.79	83300	-0.78
126	68462 - 68712-B	4.6250	7.1250	1.3750	0.6563	1.2500	1.0000	0.14	7.4022	0.2813	5.20	4.92	6.77	1.18	31800	-0.21
127	L624549 - L624510-B	4.7500	6.3125	0.8438	0.3438	0.8438	0.6563	0.06	6.4647	0.1563	5.08	5.00	6.18	1.34	17300	0.33

[1] For each code size code there are 3 options for the PIN (see 7.1): Add a code A for cone only or a code B for cup only, use no code if for a whole bearing assembly.
[2] Part numbers are for reference only. Part numbers reflect the cup and cone numbers used by industry and the ABMA. Some cones and cups may be used in multiple configurations and are not limited to one bearing assembly.
[3] These maximum fillet radii shall be cleared by the bearing corners.
[4] Minus value indicates load center inside cone backface.

Downloaded from http://www.everyspec.com

TABLE I. Size codes and dimensions.

Size code [1]	Part number [2]	d	D	T	T_1	B	C	R [3]	D_1	C_1	d_b	d_a	D_a	K factor	Basic dynamic load ratings (lb.)	a [4]
		Bore	Outside diameter	Bearing width	Standout	Cone width	Cup width	Max. shaft fillet radius	Flange		Backing shoulder diameters					Effective load center
	Cone-cup								Diameter	Width	Shaft		Housing		Radial	
128	795 - 792-B	4.7500	8.1250	1.8750	0.8125	1.8750	1.3750	0.13	8.4336	0.3125	5.47	5.28	7.80	1.27	57000	-0.07
129	48290 - 48220-B	5.0000	7.1875	1.5625	0.5000	1.5000	1.3125	0.14	7.4335	0.2500	5.55	5.31	6.97	1.91	43200	-0.22
130	67388 - 67322-B	5.0000	7.7500	1.8125	0.5938	1.8125	1.5000	0.14	8.0272	0.2813	5.67	5.43	7.52	1.70	56800	-0.25
131	95500 - 95925-B	5.0000	9.2500	2.5000	1.0000	2.5000	1.9375	0.25	9.6834	0.4375	6.06	5.59	8.54	1.58	89400	-0.55
132	799A - 792-B	5.1250	8.1250	1.8750	0.8125	1.8750	1.3750	0.14	8.4336	0.3125	5.83	5.59	7.80	1.27	57000	-0.07
133	L327249 - L327210-B	5.2500	6.9688	1.0000	0.3437	1.0313	0.8125	0.06	7.1210	0.1562	5.59	5.51	6.81	1.68	24000	0.16
134	67390 - 67322-B	5.2500	7.7500	1.8125	0.5938	1.8125	1.5000	0.14	8.0272	0.2813	5.87	5.63	7.52	1.70	56800	-0.25
135	95528 - 95925-B	5.2500	9.2500	2.5000	1.0000	2.5000	1.9375	0.19	9.6834	0.4375	6.18	5.83	8.54	1.58	89400	-0.55
136	48393 - 48320-B	5.3750	7.5000	1.5625	0.4688	1.5625	1.3125	0.14	7.7148	0.2188	5.94	5.67	7.32	1.82	43800	-0.16
137	74550 - 74850-B	5.5000	8.5000	1.8750	0.8125	1.8750	1.3750	0.14	8.8084	0.3125	6.22	5.94	8.23	1.20	57800	0.09
138	898 - 892-B	5.5000	9.0000	2.2500	0.8750	2.2500	1.7500	0.14	9.3710	0.3750	6.30	6.02	8.50	1.39	83300	-0.24
139	48685 - 48620-B	5.6250	7.8750	1.6250	0.5000	1.5625	1.3437	0.14	8.0898	0.2187	6.22	5.94	7.64	1.74	43500	-0.12
140	36690 - 36620-B	5.7500	7.6250	1.1250	0.3750	1.1250	0.9063	0.06	7.7772	0.1563	6.10	6.02	7.48	1.59	32000	0.19
141	82576 - 82950-B	5.7500	9.5000	2.2500	0.8750	2.2300	1.7500	0.14	9.8710	0.3750	6.54	6.30	8.90	1.32	82500	-0.14
142	HM231149 - HM231115-B	5.8750	9.5000	2.2500	0.8750	2.2300	1.7500	0.14	9.8710	0.3750	6.57	6.42	8.82	1.83	86500	-0.45
143	L630349 - L630310-B	6.0000	7.5625	0.9843	0.3925	0.9449	0.7480	0.08	7.7705	0.1562	6.38	6.22	7.44	1.40	13900	0.40
144	99600 - 99100-B	6.0000	10.0000	2.6250	1.1875	2.6250	1.8750	0.28	10.4320	0.4375	7.13	6.68	9.37	1.43	91400	-0.48

[1] For each code size code there are 3 options for the PIN (see 7.1): Add a code A for cone only or a code B for cup only, use no code if for a whole bearing assembly.
[2] Part numbers are for reference only. Part numbers reflect the cup and cone numbers used by industry and the ABMA. Some cones and cups may be used in multiple configurations and are not limited to one bearing assembly.
[3] These maximum fillet radii shall be cleared by the bearing corners.
[4] Minus value indicates load center inside cone backface.

Downloaded from http://www.everyspec.com

3. SALIENT CHARACTERISTICS

3.1 Dimensions. Bearing dimensions (and dynamic load ratings, see 3.4) shall conform to the requirements specified in table I for each of the bearing part numbers. The listed dimensions conform to the requirements specified in American Bearing Manufacturers Association (ABMA) Standard 19.2, "Tapered Roller Bearings - Radial Inch Design". The bearing size shall be specified in the acquisition order (see 7.3(b)). For any unlisted bearing size codes, the associated dimensional and dynamic load rating requirements should also be specified in the acquisition order.

3.2 Materials.

3.2.1 Cones (inner rings), cups (outer rings), and rollers. The bearing cones, cups, and rollers shall be made of case carburized or through-hardened steel produced in accordance with the ASTM International (ASTM) A295/A295M, "Standard Specification for High-Carbon Anti-Friction Bearing Steel", or ASTM A534, "Standard Specification for Carburizing Steels for Anti-Friction Bearings". The steel shall show a fine fracture grain size in accordance with ASTM E112, "Standard Test Methods for Determining Average Grain Size". Material hardness shall be no less than Rockwell hardness number of 58 on Rockwell C scale (HRC) and no more than 64 HRC as defined in ASTM E18, "Standard Test Methods for Rockwell Hardness of Metallic Materials".

3.2.2 Cage. The bearing cage material shall be impervious to deterioration from any lubricant, preservative, solvent, or other chemical substance expected to contact the bearing during normal use or storage. Similarly, the material shall not cause any chemical deterioration of any other bearing component. The cages shall be made from carbon steel (one piece stamped). Materials shall operate from -65 to 230 °F (-53.9 to 110 °C).

3.3 Tolerance class. The tolerance limits for bearings shall conform to tolerance class 4 as tabulated in ABMA Standard 19.2. Allowable tolerances for bearing components and assembled bearings are listed in tables II through VI.

TABLE II. Cone bore tolerance.

Cone bore (d)			
Size range		Tolerance	
Over	Inclusive	Plus	Minus
0.0000	3.0000	5	0
3.0000	6.0000	10	0

Note: Allowable tolerances are in 0.0001 inch.

Downloaded from http://www.everyspec.com

TABLE III. Cup diameter tolerance.

Cup diameter (D)			
Size range		Tolerance	
Over	Inclusive	Plus	Minus
0.0000	12.0000	10	0
12.0000	24.0000	20	0

Note: Allowable tolerances are in 0.0001 inch.

TABLE IV. Standout tolerance.

Standout (T1)			
Bore size range		Tolerance	
Over	Inclusive	Plus	Minus
0.0000	4.0000	80	0
4.0000	6.0000	140	100

Note: Allowable tolerances are in 0.0001 inch.

TABLE V. Cup flange tolerance.

Cup flange outside diameter (D1)			
Size range		Tolerance	
Over	Inclusive	Plus	Minus
0.0000	12.0000	20	0

Note: Allowable tolerances are in 0.0001 inch.

TABLE VI. Assembled bearing tolerance.

Assembled bearing maximum radial runout		
Cup outside diameter (D)		Tolerance
Over	Inclusive	
0.0000	24.0000	20

Note: Allowable tolerances are in 0.0001 inch.

3.4 Dynamic load rating. The bearing dynamic load rating shall conform to the requirements specified in table I for each bearing size code. The listed ratings conform to the requirements specified in ABMA Standard 11, "Load Ratings and Fatigue Life for Roller Bearings".

3.5 Effective load center. Dimension (a) in figure 1 locates a point on the cone axis, which is the center of pressure of all resisting forces set up by the rollers. All moments should be

Downloaded from http://www.everyspec.com

calculated from this point when determining bearing loading and shaft stresses. A plus value of (a) indicates that the center is outside the cone backface.

3.6 Lubrication. The bearings shall be furnished without lubrication.

3.7 Normal angle. A normal angle bearing has a contact angle between 10 and 19 degrees. The contact angle is the angle between the line of action of the roller load and a plane perpendicular to the bearing axis.

4. REGULATORY REQUIREMENTS

4.1 Recovered materials. The offeror/contractor is encouraged to use recovered materials to the maximum extent practicable, in accordance with paragraph 23.403 of the Federal Acquisition Regulation (FAR).

4.2 Foreign acquisition restrictions. Unless otherwise indicated in the solicitation and resulting contract, the foreign acquisition restrictions in Section 252.225, Clause 252.225.7016, of the Defense Federal Acquisition Regulation Supplement (DFARS) apply to products described by this CID.

5. PRODUCT CONFORMANCE PROVISIONS

5.1 Product conformance. The products provided shall meet the salient characteristics of this CID, conform to the producer's own drawings, specifications, standards, and quality assurance practices, and be the same product offered for sale in the commercial marketplace. The government reserves the right to require proof of such conformance.

5.2 Market acceptability. The products offered must have been previously sold either to the government or on the commercial market.

6. PACKAGING

6.1 Preservation, packing, and marking. Unless otherwise specified in the acquisition order, the bearings shall be preserved, packaged, and marked in accordance with MIL-DTL-197, "Packaging of Bearings, Associated Parts and Subassemblies" (see 7.3(c)).

Downloaded from http://www.everyspec.com

7. NOTES

7.1 Part or identification number (PIN). The following PIN procedure is for government purposes and does not constitute a requirement for the contractor.

AA59650 - 002 A Example of reference part number

- A — Size code option: (see footnote 1 of table I): A - Cone only; B - Cup only; No code - Whole bearing assembly
- 002 — Size code (see table I)
- AA59650 — CID Number

AA59650 - 002A indicates: Bearing bore 0.5906 inches; outside diameter 1.3775 inches; width 0.4330 inches; cone only.

7.2 Sources of documents.

7.2.1 DFARS and FAR. Copies of DFARS and FAR may be obtained from the Superintendent of Documents, P.O. Box 371954, Pittsburgh, PA 15250-7954. Electronic copies of DFARS may be obtained from http://www.acq.osd.mil/dpap/dars/dfarspgi/current/index.html. Electronic copies of FAR may be obtained from https://www.acquisition.gov/far/.

7.2.2 Military specifications. Copies of military specifications may be obtained from Standardization Documents Order Desk, 700 Robbins Avenue, Building 4D, Philadelphia, PA 19111-5094. Electronic copies may be obtained from https://assist.daps.dla.mil/.

7.2.3 ABMA standards. Copies of ABMA standards may be obtained from the American Bearing Manufacturers Association, 2025 M Street NW, Suite 800, Washington, DC 20036. Electronic copies may be obtained from http://www.abma-dc.org/.

7.2.4 ASTM standards. Copies of ASTM standards may be obtained from ASTM International, 100 Barr Harbor Drive, P.O. Box C700, West Conshohocken, PA 19428-2959. Electronic copies may be obtained from http://www.astm.org/.

7.3 Ordering data. The acquisition order should specify the following information:

a. CID document number, revision, and CID PIN.
b. Bearing size (with dimension/load requirements if size is unlisted) (see 3.1).
c. Preservation, packaging, and marking requirements (see 6.1).

7.4 Cross-reference information. Table VII relates the original specification slant sheets to the replacement CIDs.

Downloaded from http://www.everyspec.com

TABLE VII. Federal specification to CID cross-reference.

FF-B-187B specification sheets	Replacement CID numbers	ABMA types
1	A-A-59649	TS
2	A-A-59650	TSF
3	A-A-59651	TSS
4	A-A-59652	TSSF
5	A-A-59653	TDI and TDIS
6	A-A-59654	TDO
7	A-A-59655	TDOS
8	A-A-59656	TNA (normal angle)
9	A-A-59657	TNAS (steep angle)
10	A-A-59658	TNASW
11	A-A-59659	TNASWE

7.5 Subject term (key word) listing.

Bore
Cone
Cup
Load
Width

MILITARY INTERESTS:

Custodians:
Army - AR
Navy - MC
Air Force - 99
DLA - GS

Review Activities:
Navy - OS
Air Force - 84

CIVIL AGENCY COORDINATING ACTIVITY:

GSA - FAS

Preparing Activity:
DLA - GS4

(Project 3110-2011-019)

NOTE: The activities listed above were interested in this document as of the date of this document. Since organizations and responsibilities can change, you should verify the currency of the information above using the ASSIST database at https://assist.daps.dla.mil/.