INCH-POUND
A-A-59649A
28 March 2002
SUPERSEDING
A-A-59649
31 August 2001

COMMERCIAL ITEM DESCRIPTION

BEARING, ROLLER, TAPERED, SINGLE ROW, NORMAL ANGLE (TYPE TS)

The General Services Administration has authorized the use of this commercial item description for all federal agencies.

1. SCOPE. This commercial item description (CID) establishes government acquisition requirements for single row, normal angle (type TS), tapered, roller bearings for general-purpose use.

2. CLASSIFICATION. The roller bearings shall be of one type (TS) and classified by the size codes listed in table I. The column headings in table I refer to bearing characteristics defined in figure 1.

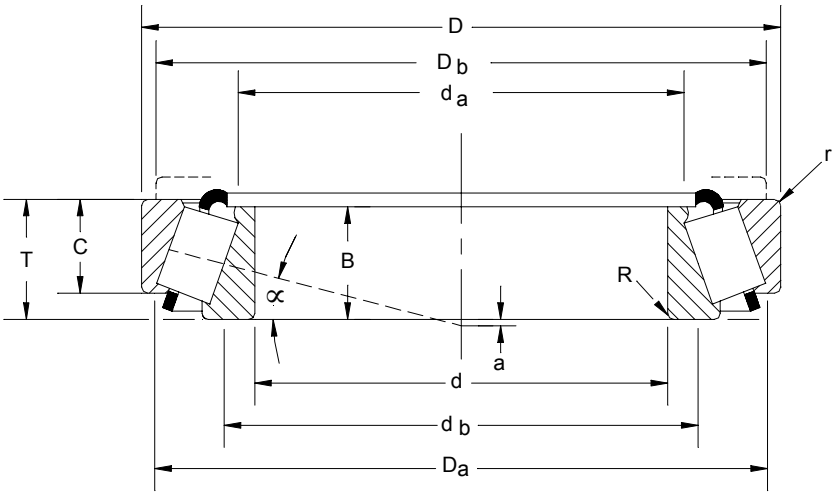

FIGURE 1. Bearing configuration.

Beneficial comments, recommendations, additions, deletions, clarifications, etc. and any data that may improve this document should be sent to: Defense Supply Center Richmond (DSCR), ATTN: DSCR-VBD, 8000 Jefferson Davis Highway, Richmond, VA 23297-5610.

AMSC N/A FSC 3110

DISTRIBUTION STATEMENT A. Approved for public release; distribution is unlimited.

TABLE I. Size codes and dimensions.*

Size code	Part /1 number	d	D	T	B	C	R 2/	r 2/	d_b	d_a	D_b	D_a	K factor	Basic dynamic load ratings (lb.)	a 3/
		Bore	Outside diameter	Bearing width	Cone width	Cup width	Max. shaft fillet radius	Max. housing fillet radius	Recommended shoulder diameters						Effective load center
	Cone-cup								Shaft		Housing			Radial	
001	A2037-A2126	0.3750	1.2595	0.3940	0.4246	0.3125	0.05	0.05	0.59	0.53	1.02	1.14	1.44	1900	-0.12
002	A4050-A4138	0.5000	1.3775	0.4330	0.4326	0.3437	0.05	0.05	0.73	0.67	1.14	1.26	1.29	2100	-0.10
003	00050-00150	0.5000	1.5000	0.5313	0.5540	0.4375	0.06	0.06	0.75	0.65	1.30	1.34	2.12	3400	-0.20
004	L21549-L21511	0.6250	1.3775	0.4330	0.4330	0.3430	0.05	0.05	0.85	0.77	1.14	1.28	1.83	2500	-0.13
005	A6062-A6157	0.6250	1.5745	0.4730	0.4391	0.3750	0.05	0.05	0.87	0.81	1.34	1.46	1.11	2200	-0.06
006	A6062-A6162	0.6250	1.6250	0.4687	0.4391	0.3437	0.05	0.05	0.87	0.81	1.36	1.46	1.11	2200	-0.06
007	03062-03162	0.6250	1.6250	0.5625	0.5780	0.4375	0.05	0.08	0.85	0.79	1.34	1.48	1.88	3900	-0.20
008	17580-17520	0.6250	1.6875	0.6563	0.6563	0.5313	0.06	0.06	0.91	0.83	1.44	1.54	1.76	5100	-0.23
009	05062-05185	0.6250	1.8504	0.5662	0.5662	0.4375	0.06	0.05	0.93	0.83	1.59	1.67	1.64	4400	-0.16
010	09062-09195	0.6250	1.9380	0.7813	0.8480	0.5625	0.03	0.05	0.87	0.85	1.65	1.75	2.20	6900	-0.36
011	LM11749-LM11710	0.6875	1.5700	0.5450	0.5750	0.4200	0.05	0.05	0.91	0.85	1.34	1.46	2.04	4000	-0.20
012	A6075-A6157	0.7500	1.5745	0.4730	0.4391	0.3750	0.04	0.05	0.94	0.91	1.34	1.46	1.11	2200	-0.06
013	A6075-A6162	0.7500	1.6250	0.4687	0.4391	0.3437	0.04	0.05	0.94	0.91	1.36	1.46	1.11	2200	-0.06
014	4A-6	0.7500	1.7500	0.5000	0.4688	0.3750	0.06	0.06	1.00	0.93	1.50	1.16	1.22	3500	-0.07
015	LM11949-LM11910	0.7500	1.7810	0.6100	0.6550	0.4750	0.05	0.05	0.98	0.93	1.56	1.63	1.94	5400	-0.22
016	05075-05185	0.7500	1.8504	0.5662	0.5662	0.4375	0.05	0.05	0.98	0.93	1.59	1.67	1.64	4400	-0.16
017	09067-09195	0.7500	1.9380	0.7100	0.7500	0.5625	0.05	0.05	1.00	0.94	1.65	1.75	2.20	6900	-0.29
018	09074-09195	0.7500	1.9380	0.7813	0.8480	0.5625	0.06	0.05	1.02	0.94	1.65	1.75	2.20	6900	-0.36
019	09074-09194	07500	1.9380	0.9063	0.8480	0.6875	0.06	0.14	1.02	0.94	1.54	1.75	2.20	6900	-0.36

1/ Part numbers are for reference only. Part numbers reflect the cup and cone numbers used by industry and the American Bearing Manufacturers Association (ABMA).
2/ These maximum fillet radii shall be cleared by the bearing corners.
3/ Minus value indicates load center inside cone backface.
* Column headings in the above table refer to bearing characteristics defined in figure 1.

TABLE I. Size codes and dimensions (continued).*

Size code	Part /1 number	d	D	T	B	C	R 2/	r 2/	d_b	d_a	D_b	D_a	K factor	Basic dynamic load ratings (lb.)	a 3/
		Bore	Outside diameter	Bearing width	Cone width	Cup width	Max. shaft fillet radius	Max. housing fillet radius	Recommended shoulder diameters						Effective load center
	Cone-cup								Shaft		Housing			Radial	
020	09078-09195	0.7500	1.9380	0.7813	0.8480	0.5625	0.05	0.05	1.00	0.94	1.65	1.75	2.20	6900	-0.36
021	09067-09194	0.7500	1.9380	0.8350	0.7500	0.6875	0.05	0.14	1.00	0.94	1.54	1.75	2.20	6900	-0.29
022	09067-09196	0.7500	1.9380	0.8350	0.7500	0.6875	0.05	0.06	1.00	0.94	1.63	1.75	2.20	6900	-0.29
023	1775-1729	0.7500	2.2400	0.7625	0.7810	0.6250	0.06	0.05	1.06	0.98	1.93	2.01	1.90	7300	-0.27
024	12580-12520	0.8125	1.9380	0.7813	0.7813	0.6250	0.06	0.06	1.12	1.02	1.67	1.79	1.81	7000	-0.28
025	M12649-M12610	0.8437	1.9687	0.6900	0.7200	0.5500	0.05	0.05	1.14	1.00	1.73	1.81	2.10	7200	-0.25
026	LL52549-LL52510	0.8750	1.6563	0.4400	0.4400	0.3400	0.05	0.05	1.08	1.02	1.44	1.56	1.47	2700	-0.07
027	07807-07196	0.8750	1.9687	0.5313	0.5614	0.3750	0.05	0.04	1.12	1.06	1.75	1.85	1.45	4800	-0.11
028	M12648-M12610	0.8750	1.9687	0.6900	0.7200	0.5500	0.05	0.05	1.12	1.04	1.73	1.81	2.10	7200	-0.25
029	1380-1328	0.8750	2.0625	0.7625	0.7940	0.5625	0.06	0.06	1.16	1.06	1.77	1.91	2.00	7800	-0.30
030	1380-1329	0.8750	2.1250	0.7625	0.7940	0.5625	0.06	0.06	1.16	1.06	1.81	1.93	2.00	7800	-0.30
031	1755-1729	0.8750	2.2400	0.7625	0.7810	0.6250	0.05	0.05	1.14	1.08	1.93	2.01	1.90	7300	-0.27
032	1280-1220	0.8750	2.2500	0.0750	0.8750	0.6875	0.03	0.06	1.16	1.14	1.93	2.05	1.69	8900	-0.27
033	1975-1932	0.8750	2.3125	0.7500	0.7620	0.5937	0.03	0.05	1.14	1.10	2.05	2.13	1.77	7800	-0.23
034	2684-2631	0.8750	2.6150	0.9375	1.0013	0.7500	0.06	0.05	1.24	1.14	2.28	2.36	2.30	12400	-0.37
035	07093-07196	0.9375	1.9687	0.5313	0.5614	0.3750	0.06	0.04	1.20	1.12	1.75	1.85	1.45	4800	-0.11
036	L44640-L44610	0.9375	1.9800	0.5600	0.5800	0.4200	0.06	0.05	1.20	1.12	1.75	1.85	1.56	4900	-0.13
037	1779-1729	0.9375	2.2400	0.7625	0.7810	0.6250	0.03	0.05	1.16	1.12	1.93	2.01	1.90	7300	-0.27
038	3659-3620	0.9375	2.4375	1.1250	1.1975	0.9375	0.09	0.13	1.40	1.24	2.05	2.27	2.07	14200	-0.47
039	07100-07196	1.0000	1.9687	0.5313	0.5614	0.3750	0.04	0.04	1.20	1.16	1.75	1.85	1.45	4800	-0.11
040	07100-S-07196	1.0000	1.9687	0.5313	0.5614	0.3750	0.06	0.04	1.24	1.16	1.75	1.85	1.45	4800	-0.11

1/ Part numbers are for reference only. Part numbers reflect the cup and cone numbers used by industry and the American Bearing Manufacturers Association (ABMA).
2/ These maximum fillet radii shall be cleared by the bearing corners.
3/ Minus value indicates load center inside cone backface.
* Column headings in the above table refer to bearing characteristics defined in figure 1.

TABLE I. Size codes and dimensions (continued).*

Size code	Part /1 number	d	D	T	B	C	R 2/	r 2/	d_b	d_a	D_b	D_a	K factor	Basic dynamic load ratings (lb.)	a 3/
		Bore	Outside diameter	Bearing width	Cone width	Cup width	Max. shaft fillet radius	Max. housing fillet radius	Recommended shoulder diameters						Effective load center
	Cone-cup								Shaft		Housing			Radial	
041	L44642-L44610	1.0000	1.9800	0.5600	0.5800	0.4200	0.14	0.05	1.42	1.16	1.75	1.85	1.56	4900	-0.13
042	L44643-L44610	1.0000	1.9800	0.5600	0.5800	0.4200	0.05	0.05	1.24	1.16	1.75	1.85	1.56	4900	-0.13
043	07100-07204	1.0000	2.0470	0.5910	0.5614	0.5000	0.04	0.05	1.20	1.16	1.77	1.89	1.45	4800	-0.11
044	1780-1729	1.0000	2.2400	0.7625	0.7810	0.6250	0.03	0.05	1.20	1.18	1.93	2.01	1.90	7300	-0.27
045	M84548-M84510	1.0000	2.6500	0.7650	0.7650	0.5800	0.06	0.06	1.42	1.30	1.91	2.13	1.07	7900	-0.12
046	1986-1932	1.0000	2.3125	0.7500	0.7620	0.5937	0.05	0.05	1.28	1.20	2.05	2.13	1.77	7800	-0.23
047	M84249-M84210	1.0000	2.3437	0.9200	0.9100	0.7200	0.03	0.06	1.42	1.27	1.95	2.20	1.07	9300	-0.20
048	15578-15523	1.0000	2.3750	0.7812	0.6875	0.6250	0.05	0.06	1.28	1.20	2.01	2.13	1.69	7500	-0.20
049	15101-15243	1.0000	2.4375	0.7500	0.8125	0.5625	0.03	0.08	1.28	1.24	2.13	2.28	1.67	8200	-0.23
050	15100-15245	1.0000	2.4409	0.7500	0.8125	0.5625	0.14	0.05	1.50	1.24	2.17	2.28	1.67	8200	-0.23
051	15101-15245	1.0000	2.4409	0.7500	0.8125	0.5625	0.03	0.05	1.28	1.24	2.17	2.28	1.67	8200	-0.23
052	15102-15245	1.0000	2.4409	0.7500	0.8125	0.5625	0.06	0.05	1.34	1.24	2.17	2.28	1.67	8200	-0.23
053	15101-15244	1.0000	2.4409	0.8125	0.8125	0.6250	0.03	0.05	1.28	1.24	2.17	2.28	1.67	8200	-0.23
054	15101-15250	1.0000	2.5000	0.8125	0.8125	0.6250	0.03	0.05	1.28	1.24	2.20	2.32	1.67	8200	-0.23
055	15101-15250X	1.0000	2.5000	0.8125	0.8125	0.6250	0.03	0.06	1.28	1.24	2.17	2.32	1.67	8200	-0.23
056	M86643-M86610	1.0000	2.5312	0.8438	0.8438	0.6563	0.06	0.06	1.50	1.44	2.13	2.40	1.07	9700	-0.13
057	2687-2631	1.0000	2.6150	0.9375	1.0013	0.7500	0.05	0.05	1.32	1.24	2.28	2.36	2.30	12400	-0.37
058	02473-02420	1.0000	2.6875	0.8750	0.8750	0.6875	0.03	0.06	1.36	1.32	2.32	2.48	1.40	10400	-0.20
059	HM88630-HM88610	1.0000	2.8438	1.0000	1.0000	0.7812	0.03	0.09	1.56	1.56	2.36	2.72	1.07	12300	-0.18
060	3189-3120	1.0000	2.8593	1.1875	1.1810	0.9375	0.03	0.13	1.40	1.38	2.40	2.64	1.76	15200	-0.40
061	L44649-L44610	1.0625	1.9800	0.5600	0.5800	0.4200	0.14	0.05	1.48	1.22	1.75	1.85	1.56	4900	-0.13

1/ Part numbers are for reference only. Part numbers reflect the cup and cone numbers used by industry and the American Bearing Manufacturers Association (ABMA).
2/ These maximum fillet radii shall be cleared by the bearing corners.
3/ Minus value indicates load center inside cone backface.
* Column headings in the above table refer to bearing characteristics defined in figure 1.

TABLE I. Size codes and dimensions (continued).*

Size code	Part /1 number	d	D	T	B	C	R 2/	r 2/	d_b	d_a	D_b	D_a	K factor	Basic dynamic load ratings (lb.)	a 3/
		Bore	Outside diameter	Bearing width	Cone width	Cup width	Max. shaft fillet radius	Max. housing fillet radius	Recommended shoulder diameters						Effective load center
									Shaft		Housing				
	Cone-cup													Radial	
062	15580-15523	1.0625	2.3750	0.7812	0.6875	0.6250	0.14	0.06	1.52	1.26	2.01	2.13	1.69	7500	-0.20
063	15106-15245	1.0625	2.4409	0.7500	0.8125	0.5625	0.03	0.05	1.32	1.30	2.17	2.28	1.67	8200	-0.23
064	2688-2631	1.0625	2.6150	0.9375	1.0013	0.7500	0.06	0.05	1.38	1.30	2.28	2.36	2.30	12400	-0.37
065	1985-1930	1.1250	2.2400	0.7813	0.7620	0.6250	0.03	0.03	1.34	1.32	2.01	2.11	1.77	7800	-0.23
066	15590-15520	1.1250	2.2500	0.6875	0.6875	0.5313	0.14	0.06	1.56	1.32	2.01	2.09	1.69	7500	-0.20
067	1985-1932	1.1250	2.3125	0.7500	0.7620	0.5937	0.03	0.05	1.34	1.32	2.05	2.13	1.77	7800	-0.23
068	1988-1932	1.1250	2.3125	0.7500	0.7620	0.5937	0.14	0.05	1.56	1.32	2.05	2.13	1.77	7800	-0.23
069	15590-15523	1.1250	2.3750	0.7812	0.6875	0.6250	0.14	0.06	1.56	1.32	2.01	2.13	1.69	7500	-0.20
070	1985-1931	1.1250	2.3750	0.7813	0.7620	0.6250	0.03	0.05	1.34	1.32	2.05	2.17	1.77	7800	-0.23
071	15113-15243	1.1250	2.4375	0.7500	0.8125	0.5625	0.03	0.08	1.36	1.34	2.13	2.28	1.67	8200	-0.23
072	15113-15245	1.1250	2.4409	0.7500	0.8125	0.5625	0.03	0.05	1.36	1.34	2.11	2.28	1.67	8200	-0.23
073	15112-15245	1.1250	2.4409	0.7500	0.8125	0.5625	0.14	0.05	1.57	1.34	2.17	2.28	1.67	8200	-0.23
074	M86647-M86610	1.1250	2.5312	0.8438	0.8438	0.6563	0.06	0.06	1.57	1.50	2.13	2.40	1.07	9700	-0.13
075	2689-2631	1.1250	2.6150	0.9375	1.0013	0.7500	0.05	0.05	1.42	1.34	2.28	2.36	2.30	12400	-0.37
076	2474-2420	1.1250	2.6875	0.8750	0.9375	0.6875	0.03	0.06	1.42	1.38	2.36	2.48	1.72	10900	-0.26
077	02474-02420	1.1250	2.6875	0.8750	0.8750	0.6875	0.03	0.06	1.44	1.42	2.32	2.48	1.40	10400	-0.20
078	2578-2523	1.1250	2.7500	0.9375	0.9983	0.7500	0.09	0.05	1.54	1.38	2.40	2.52	2.14	13500	-0.34
079	26112-26283	1.1250	2.8346	0.7480	0.7450	0.6250	0.06	0.06	1.46	1.38	2.44	2.56	1.62	9500	-0.16
080	26112-26283-S	1.1250	2.8346	0.7480	0.7450	0.6250	0.06	0.08	1.46	1.38	2.44	2.56	1.62	9500	-0.16
081	3192-3120	1.1250	2.8593	1.1875	1.1810	0.9375	0.14	0.13	1.71	1.46	2.40	2.64	1.76	15200	-0.40
082	3198-3120	1.1250	2.8593	1.1875	1.1810	0.9375	0.05	0.13	1.54	1.46	2.40	2.64	1.76	15200	-0.40

1/ Part numbers are for reference only. Part numbers reflect the cup and cone numbers used by industry and the American Bearing Manufacturers Association (ABMA).
2/ These maximum fillet radii shall be cleared by the bearing corners.
3/ Minus value indicates load center inside cone backface.
* Column headings in the above table refer to bearing characteristics defined in figure 1.

TABLE I. Size codes and dimensions (continued).*

Size code	Part /1 number	d	D	T	B	C	R 2/	r 2/	d_b	d_a	D_b	D_a	K factor	Basic dynamic load ratings (lb.)	a 3/
		Bore	Outside diameter	Bearing width	Cone width	Cup width	Max. shaft fillet radius	Max. housing fillet radius	Recommended shoulder diameters						Effective load center
	Cone-cup								Shaft		Housing			Radial	
083	3198-3130	1.1250	2.8593	1.1875	1.1810	0.9375	0.05	0.03	1.54	1.46	2.48	2.64	1.76	15200	-0.40
084	02872-02820	1.1250	2.8750	0.8750	0.8750	0.6875	0.03	0.13	1.48	1.46	2.44	2.68	1.29	10600	-0.15
085	17119-17244	1.1875	2.4409	0.6300	0.6522	0.5625	0.06	0.06	1.46	1.36	2.13	2.24	1.53	7000	-0.14
086	M86649-M86610	1.1875	2.5312	0.8438	0.8438	0.6563	0.06	0.06	1.61	1.50	2.13	2.40	1.07	9700	-0.13
087	2558-2523	1.1875	2.7500	0.9375	0.9983	0.7500	0.09	0.05	1.57	1.44	2.40	2.52	2.14	13500	-0.34
088	3187-3120	1.1875	2.8593	1.1875	1.1810	0.9375	0.03	0.13	1.54	1.52	2.40	2.64	1.76	15200	-0.40
089	08125-08231	1.2500	2.3125	0.5781	0.5937	0.4219	0.04	0.04	1.48	1.42	2.05	2.17	1.23	5200	-0.05
090	LM67048-LM6701D	1.2500	2.3280	0.6250	0.6600	0.4650	SPCL	0.05	1.67	1.42	2.05	2.20	1.42	6400	-0.12
091	15123-15245	1.2500	2.4409	0.7150	0.7500	0.5625	SPCL	0.05	1.67	1.44	2.17	2.28	1.67	8200	-0.19
092	15125-15245	1.2500	2.4409	0.7500	0.8125	0.5625	0.14	0.05	1.67	1.44	2.17	2.28	1.67	8200	-0.23
093	15126-15245	1.2500	2.4409	0.7500	0.8125	0.5625	0.03	0.05	1.46	1.44	2.17	2.28	1.67	8200	-0.23
094	2580-2520	1.2500	2.6150	1.0000	0.9983	0.8125	0.03	0.13	1.52	1.48	2.24	2.46	2.14	13500	-0.34
095	02475-02420	1.2500	2.6875	0.8750	0.8750	0.6875	0.14	0.06	1.75	1.52	2.32	2.48	1.40	10400	-0.20
096	02476-02421	1.2500	2.6875	0.8750	0.8750	0.6875	0.03	0.03	1.54	1.52	2.32	2.48	1.40	10400	-0.02
097	02476-02420	1.2500	2.6875	0.8750	0.8750	0.6875	0.03	0.06	1.54	1.52	2.32	2.48	1.40	10400	-0.20
098	23491-23420	1.2500	2.6875	1.0625	1.0625	0.8750	0.06	0.06	1.61	1.54	2.32	2.52	1.66	12900	-0.34
099	14124-14276	1.2500	2.7170	0.7813	0.7710	0.6250	0.03	0.05	1.52	1.48	2.36	2.48	1.53	8800	-0.17
100	14125A-14276	1.2500	2.7170	0.7813	0.7710	0.6250	0.14	0.05	1.73	1.48	2.36	2.48	1.53	8800	-0.17
101	2580-2523	1.2500	2.7500	0.9375	0.9983	0.7500	0.03	0.05	1.52	1.48	2.40	2.52	2.14	13500	-0.34
102	3188-3130	1.2500	2.8593	1.1875	1.1810	0.9375	0.03	0.03	1.57	1.56	2.48	2.64	1.76	15200	-0.40

1/ Part numbers are for reference only. Part numbers reflect the cup and cone numbers used by industry and the American Bearing Manufacturers Association (ABMA).
2/ These maximum fillet radii shall be cleared by the bearing corners.
3/ Minus value indicates load center inside cone backface.
* Column headings in the above table refer to bearing characteristics defined in figure 1.

TABLE I. Size codes and dimensions (continued).*

Size code	Part /1 number	d	D	T	B	C	R 2/	r 2/	d_b	d_a	D_b	D_a	K factor	Basic dynamic load ratings (lb.)	a 3/
		Bore	Outside diameter	Bearing width	Cone width	Cup width	Max. shaft fillet radius	Max. housing fillet radius	Recommended shoulder diameters						Effective load center
	Cone-cup								Shaft		Housing			Radial	
103	HM88542-HM88510	1.2500	2.8750	1.1563	1.0938	0.0963	0.05	0.13	1.79	1.68	2.32	2.76	1.07	14000	-0.22
104	2580-2523-S	1.2500	2.7500	0.9375	0.9983	0.7500	0.03	0.06	1.52	1.48	2.40	2.48	2.14	13500	-0.34
105	2582-2523	1.2500	2.7500	0.9375	0.9983	0.7500	0.14	0.05	1.73	1.48	2.40	2.52	2.14	13500	-0.34
106	3188-3120	1.2500	2.8593	1.1875	1.1810	0.9375	0.03	0.13	1.57	1.56	2.40	2.64	1.76	15200	-0.40
107	3193-3120	1.2500	2.8593	1.1875	1.1810	0.9375	0.14	0.13	1.79	1.56	2.40	2.64	1.76	15200	-0.40
108	2879-2820	1.2500	2.8750	0.8750	0.9375	0.6875	0.03	0.13	1.56	1.52	2.48	2.68	1.59	11900	-0.22
109	02875-02820	1.2500	2.8750	0.8750	0.8750	0.6875	0.14	0.13	1.79	1.56	2.44	2.68	1.29	10600	-0.15
110	02876-02820	1.2500	2.8750	0.8750	0.8750	0.6875	0.03	0.13	1.57	1.56	2.44	2.68	1.29	10600	-0.15
111	HM88542-HM88510	1.2500	2.8750	1.1563	1.0938	0.9063	0.05	0.13	1.79	1.68	2.32	2.76	1.07	14000	-0.22
112	HM88542-HM88511	1.2500	2.8750	1.1563	1.0938	0.9063	0.05	0.03	1.79	1.68	2.44	2.76	1.07	14000	-0.22
113	HM88542-HM88512	1.2500	2.9060	1.1563	1.0938	0.9063	0.05	0.13	1.79	1.68	2.36	2.76	1.07	14000	-0.22
114	HM89440-HM89410	1.2500	3.0000	1.1563	1.1250	0.9063	0.03	0.13	1.79	1.75	2.44	2.87	1.07	14900	-0.22
115	3476-3420	1.2500	3.1250	1.1563	1.1721	0.9375	0.05	0.13	1.69	1.61	2.64	2.91	1.60	16800	-0.34
116	M8804X-M88010	1.3125	2.6875	0.8750	0.8750	0.6875	0.03	0.06	1.67	1.62	2.28	2.56	1.07	10400	-0.11
117	1413C-14276	1.3125	2.7170	0.7813	0.7710	0.6250	0.14	0.05	1.77	1.52	2.36	2.48	1.53	8800	-0.17
118	14131-14276	1.3125	2.7170	0.7813	0.7710	0.6250	0.03	0.05	1.56	1.52	2.36	2.48	1.53	8800	-0.17
119	2581-2523	1.3125	2.7500	0.9375	0.9983	0.7500	0.03	0.05	1.56	1.54	2.40	2.52	2.14	13500	-0.34
120	2585-2523	1.3125	2.7500	0.9375	0.9983	0.7500	0.14	0.05	1.77	1.54	2.40	2.52	2.14	13500	-0.34
121	26131-26283	1.3125	2.8346	0.7480	0.7450	0.6250	0.14	0.06	1.75	1.52	2.44	2.56	1.62	9500	-0.16

1/ Part numbers are for reference only. Part numbers reflect the cup and cone numbers used by industry and the American Bearing Manufacturers Association (ABMA).
2/ These maximum fillet radii shall be cleared by the bearing corners.
3/ Minus value indicates load center inside cone backface.
* Column headings in the above table refer to bearing characteristics defined in figure 1.

TABLE I. Size codes and dimensions (continued).*

Size code	Part /1 number	d	D	T	B	C	R 2/	r 2/	d_b	d_a	D_b	D_a	K factor	Basic dynamic load ratings (lb.)	a 3/
		Bore	Outside diameter	Bearing width	Cone width	Cup width	Max. shaft fillet radius	Max. housing fillet radius	Recommended shoulder diameters						Effective load center
									Shaft		Housing				
	Cone-cup													Radial	
122	3196-3120	1.3125	2.8593	1.1875	1.1810	0.9375	0.14	0.13	1.85	1.59	2.40	2.64	1.76	15200	-0.40
123	HM88547-HM88510	1.3125	2.8750	1.1563	1.0938	0.9063	0.03	0.13	1.79	1.68	2.32	2.76	1.07	14000	-0.22
124	2785-2720	1.3125	3.0000	0.9375	1.0100	0.7500	0.14	0.13	1.81	1.57	2.60	2.76	1.93	14000	-0.32
125	2790-2720	1.3125	3.0000	0.9375	1.0100	0.7500	0.06	0.13	1.65	1.57	2.60	2.76	1.93	14000	-0.32
126	31590-31520	1.3125	3.0000	1.1563	1.1250	0.9375	0.03	0.13	1.69	1.67	2.52	2.83	1.45	15200	-0.30
127	HM89443-HM89410	1.3125	3.0000	1.1563	1.1250	0.9063	0.03	0.13	1.83	1.75	2.44	2.87	1.07	14900	-0.22
128	HM89444-HM89410	1.3125	3.0000	1.1563	1.1250	0.9063	0.15	0.13	2.09	1.75	2.44	2.87	1.07	14900	-0.22
129	LM48548-LM48510	1.3750	2.5625	0.7100	0.7200	0.5500	SPCL	0.05	1.81	1.57	2.28	2.40	1.55	8900	-0.15
130	LM48548A-LM48510	1.3750	2.5625	0.7100	0.7200	0.5500	0.03	0.05	1.59	1.66	2.28	2.40	1.55	8900	-0.14
131	M38549-M38510	1.3750	2.6250	0.8125	0.8125	0.6563	0.14	0.09	1.83	1.57	2.28	2.44	1.66	10100	-0.22
132	14585-14525	1.3750	2.6875	0.8125	0.8125	0.6250	0.14	0.09	1.81	1.57	2.32	2.48	1.66	9600	-0.23
133	14137A-14276	1.3750	2.7170	0.7813	0.7710	0.6250	0.06	0.05	1.65	1.57	2.36	2.48	1.53	8800	-0.17
134	14138A-14276	1.3750	2.7170	0.7813	0.7710	0.6250	0.14	0.05	1.81	1.57	2.36	2.48	1.53	8800	-0.17
135	HM88649-HM88610	1.3750	2.8438	1.0000	1.0000	0.7812	0.09	0.09	1.91	1.68	2.36	2.72	1.07	12300	-0.18
136	16137-16284	1.3750	2.8440	0.8125	0.8125	0.6250	0.14	0.05	1.85	1.59	2.48	2.64	1.45	9200	-0.16
137	2878-2820	1.3750	2.8750	0.8750	0.9375	0.6875	0.03	0.13	1.65	1.61	2.48	2.68	1.59	11900	-0.22
138	02877-02820	1.3750	2.8750	0.8750	0.8750	0.6875	0.14	0.13	1.91	1.65	2.44	2.68	1.29	10600	-0.15
139	02878-02820	1.3750	2.8750	0.8750	0.8750	0.6875	0.03	0.13	1.67	1.65	2.44	2.68	1.29	10600	-0.15
140	2793-2735X	1.3750	2.8750	0.9375	1.0100	0.7500	0.03	0.03	1.65	1.61	2.60	2.72	1.93	14000	-0.32

1/ Part numbers are for reference only. Part numbers reflect the cup and cone numbers used by industry and the American Bearing Manufacturers Association (ABMA).
2/ These maximum fillet radii shall be cleared by the bearing corners.
3/ Minus value indicates load center inside cone backface.
* Column headings in the above table refer to bearing characteristics defined in figure 1.

TABLE I. Size codes and dimensions (continued).*

Size code	Part /1 number	d	D	T	B	C	R 2/	r 2/	d_b	d_a	D_b	D_a	K factor	Basic dynamic load ratings (lb.)	a 3/
		Bore	Outside diameter	Bearing width	Cone width	Cup width	Max. shaft fillet radius	Max. housing fillet radius	Recommended shoulder diameters						Effective load center
	Cone-cup								Shaft		Housing			Radial	
141	25877-25820	1.3750	2.8750	0.9375	0.9688	0.7500	0.06	0.09	1.69	1.59	2.52	2.68	2.01	13700	-0.32
142	25877-25821	1.3750	2.8750	0.9375	0.9688	0.7500	0.06	0.03	1.69	1.59	2.56	2.68	2.01	13700	-0.32
143	25878-25821	1.3750	2.8750	0.9375	0.9688	0.7500	0.14	0.03	1.85	1.59	2.48	2.68	2.01	13700	-0.32
144	23690-23620	1.3750	2.8750	1.0625	1.0620	0.8750	0.14	0.06	1.93	1.66	2.48	2.68	1.58	14400	-0.32
145	2786-2720	1.3750	3.0000	0.9375	1.0100	0.7500	0.20	0.13	2.01	1.61	2.60	2.76	1.93	14000	-0.32
146	2793-2720	1.3750	3.0000	0.9375	1.0100	0.7500	0.03	0.13	1.65	1.61	2.60	2.76	1.93	14000	-0.32
147	2793-2729	1.3750	3.0000	0.9375	1.0100	0.7500	0.03	0.03	1.65	1.61	2.68	2.76	1.93	14000	-0.32
148	2796-2720	1.3750	3.0000	0.9375	1.0100	0.7500	0.14	0.13	1.87	1.61	2.60	2.76	1.93	14000	-0.32
149	31593-31520	1.3750	3.0000	1.1563	1.1250	0.9375	0.14	0.13	1.97	1.71	2.52	2.83	1.45	16000	-0.30
150	31594-31520	1.3750	3.0000	1.1563	1.1250	0.9375	0.06	0.13	1.81	1.71	2.52	2.83	1.45	16000	-0.30
151	31594-31521	1.3750	3.0000	1.1563	1.1250	0.9375	0.06	0.05	1.81	1.71	2.60	2.83	1.45	16000	-0.30
152	36137-36300	1.3750	3.0000	1.1563	1.1750	0.9375	0.06	0.13	1.77	1.67	2.60	2.80	1.67	16100	-0.36
153	HM89446-HM89410	1.3750	3.0000	1.1563	1.1250	0.9063	0.14	0.13	2.09	1.75	2.44	2.87	1.07	14900	-0.22
154	3482-3420	1.3750	3.1250	1.1563	1.1721	0.9375	0.03	0.13	1.73	1.71	2.64	2.91	1.60	17700	-0.34
155	3478-3420	1.3750	3.1250	1.1563	1.1721	0.9375	0.14	0.13	1.97	1.71	2.64	2.91	1.60	16800	-0.34
156	3379-3320	1.3750	3.1562	1.1563	1.1965	0.9375	0.14	0.13	1.89	1.63	2.76	2.95	2.14	18500	-0.43
157	2872-3820	1.3750	3.3750	1.1875	1.1875	0.9375	0.14	0.13	2.09	1.81	2.87	3.19	1.45	20000	-0.32
158	3581-3526	1.3750	3.4375	1.1875	1.2160	0.9375	0.14	0.03	1.95	1.69	2.99	3.15	1.91	19100	-0.40
159	449-432	1.3750	3.7500	1.0938	1.1772	0.8750	0.03	0.09	1.73	1.71	3.27	3.43	2.05	20500	-0.36
160	31597-31520	1.4375	3.0000	1.1563	1.1250	0.9375	0.14	0.13	2.01	1.75	2.52	2.83	1.45	16000	-0.30

1/ Part numbers are for reference only. Part numbers reflect the cup and cone numbers used by industry and the American Bearing Manufacturers Association (ABMA).
2/ These maximum fillet radii shall be cleared by the bearing corners.
3/ Minus value indicates load center inside cone backface.
* Column headings in the above table refer to bearing characteristics defined in figure 1.

TABLE I. Size codes and dimensions (continued).*

Size code	Part /1 number	d	D	T	B	C	R 2/	r 2/	d_b	d_a	D_b	D_a	K factor	Basic dynamic load ratings (lb.)	a 3/
		Bore	Outside diameter	Bearing width	Cone width	Cup width	Max. shaft fillet radius	Max. housing fillet radius	Recommended shoulder diameters						Effective load center
	Cone-cup								Shaft		Housing			Radial	
161	HM89448-HM89410	1.4375	3.0000	1.1563	1.1250	0.9063	0.03	0.13	1.91	1.75	2.44	2.87	1.07	14900	-0.22
162	HM89449-HM89410	1.4375	3.0000	1.1563	1.1250	0.9063	0.14	0.13	2.13	1.75	2.44	2.87	1.07	14900	-0.22
163	HM89449-HM89411	1.4375	3.0000	1.1563	1.1250	0.9063	0.14	0.03	2.13	1.75	2.56	2.87	1.07	14900	-0.22
164	26877-26822	1.4375	3.1250	0.9375	1.0000	0.7500	0.03	0.03	1.73	1.69	2.80	2.91	1.83	14700	-0.29
165	3479-3420	1.4375	3.1250	1.1563	1.1721	0.9375	0.03	0.13	1.79	1.75	2.64	2.91	1.60	16800	-0.34
166	HM89249-HM89210	1.4375	3.1250	1.1563	1.1350	0.8923	0.14	0.13	2.17	1.73	2.60	2.95	1.07	17000	-0.23
167	25570-25520	1.4375	3.2650	0.9375	1.0000	0.7500	0.14	0.03	2.01	1.77	2.91	3.03	1.74	14500	-0.25
168	3878-3820	1.4375	3.3570	1.1875	1.1875	0.9375	0.03	0.13	1.89	1.85	2.87	3.19	1.45	20000	-0.32
169	13889-13830	1.5000	2.5000	0.5000	0.4688	0.3750	0.06	0.03	1.77	1.67	2.32	2.36	1.69	4500	-0.03
170	13889-13836	1.5000	2.5625	0.5000	0.4688	0.3750	0.06	0.03	1.77	1.67	2.32	2.40	1.69	4500	-0.03
171	LM29748-LM29710	1.5000	2.5625	0.7100	0.7200	0.5500	SPCL	0.05	1.93	1.67	2.32	2.44	1.76	7900	-0.16
172	LM29749-LM29710	1.5000	2.5625	0.7100	0.7200	0.5500	0.04	0.05	1.81	1.67	2.32	2.44	1.76	7900	-0.16
173	LM29749-LM29711	1.5000	2.5625	0.7800	0.7200	0.6200	0.09	0.05	1.81	1.67	2.28	2.44	1.76	7900	-0.16
174	19150-19268	1.5000	2.6875	0.6250	0.6504	0.4688	0.06	0.06	1.77	1.69	2.40	2.56	1.31	8300	-0.06
175	13685-13621	1.5000	2.7170	0.7500	0.7500	0.5938	0.14	0.09	1.95	1.69	2.40	2.56	1.45	9420	-0.12
176	13687-13620	1.5000	2.7170	0.7500	0.7500	0.5938	0.08	0.03	1.83	1.69	2.44	2.56	1.45	9420	-0.12
177	13687-13621	1.5000	2.7170	0.7500	0.7500	0.5938	0.08	0.09	1.83	1.69	2.40	2.56	1.45	9420	-0.12
178	19150-19281	1.5000	2.8125	0.6250	0.6504	0.4688	0.06	0.04	1.77	1.69	2.48	2.60	1.31	8300	-0.06

1/ Part numbers are for reference only. Part numbers reflect the cup and cone numbers used by industry and the American Bearing Manufacturers Association (ABMA).
2/ These maximum fillet radii shall be cleared by the bearing corners.
3/ Minus value indicates load center inside cone backface.
* Column headings in the above table refer to bearing characteristics defined in figure 1.

TABLE I. Size codes and dimensions (continued).*

Size code	Part /1 number	d	D	T	B	C	R 2/	r 2/	d_b	d_a	D_b	D_a	K factor	Basic dynamic load ratings (lb.)	a 3/
		Bore	Outside diameter	Bearing width	Cone width	Cup width	Max. shaft fillet radius	Max. housing fillet radius	Recommended shoulder diameters						Effective load center
	Cone-cup								Shaft		Housing			Radial	
179	19150-19283	1.5000	2.8346	0.6700	0.6504	0.5625	0.06	0.06	1.77	1.69	2.48	2.60	1.31	8300	-0.06
180	16150-16282	1.5000	2.8436	0.7480	0.8125	0.5605	0.14	0.06	1.95	1.69	2.48	2.64	1.45	9200	-0.16
181	16150-16284	1.5000	2.8440	0.8125	0.8125	0.6250	0.14	0.05	1.95	1.69	2.48	2.64	1.45	9200	-0.16
182	2788A-2735X	1.5000	2.8750	0.9375	1.0100	0.7500	0.06	0.03	1.81	1.71	2.60	2.72	1.93	14700	-0.31
183	28150-28300	1.5000	3.0000	0.8125	0.8244	0.6105	0.06	0.05	1.79	1.71	2.68	2.80	1.45	10200	-0.19
184	2788-2729	1.5000	3.0000	0.9375	1.0100	0.7500	0.14	0.03	1.97	1.71	2.68	2.76	1.93	14000	-0.31
185	2776-2720	1.5000	3.0000	0.9375	1.0100	0.7500	0.17	0.13	2.05	1.71	2.60	2.76	1.93	14000	-0.32
186	2777-2720	1.5000	3.0000	0.9375	1.0100	0.7500	0.22	0.13	2.13	1.71	2.60	2.76	1.93	14000	-0.32
187	2788-2720	1.5000	3.0000	0.9375	1.0100	0.7500	0.14	0.13	1.97	1.71	2.60	2.76	1.93	14000	-0.32
188	2788A-2720	1.5000	3.0000	0.9375	1.0100	0.7500	0.06	0.13	1.81	1.71	2.60	2.76	1.93	14000	-0.32
189	26878-26822	1.5000	3.1250	0.9375	1.0000	0.7500	0.03	0.03	1.77	1.75	2.80	2.91	1.83	14700	-0.29
190	3490-3420	1.5000	3.1250	1.1563	1.1721	0.9375	0.14	0.13	2.05	1.80	2.64	2.91	1.60	16800	-0.34
191	347-332	1.5000	3.1496	0.8268	0.8820	0.7018	0.14	0.05	1.97	1.73	2.87	2.95	2.14	12900	-0.25
192	28150-28315	1.5000	3.1496	0.8270	0.8244	0.6250	0.06	0.06	1.79	1.71	2.72	2.87	1.45	10400	-0.19
193	2788-0-27820	1.5000	3.1510	0.9688	0.9330	0.7288	0.03	0.06	1.89	1.85	2.68	2.95	1.04	12600	-0.10
194	27881-27820	1.5000	3.1510	0.9688	0.9330	0.7288	0.14	0.06	2.09	1.85	2.68	2.95	1.04	12600	-0.10
195	26878-26820	1.5000	3.1562	1.0000	1.0000	0.8125	0.03	0.13	1.77	1.75	2.72	2.91	1.83	14700	-0.29
196	3490-3422	1.5000	3.1562	1.1563	1.1721	0.9375	0.14	0.13	2.05	1.81	2.68	2.91	1.60	16800	-0.34
197	3381-3320	1.5000	3.1562	1.1563	1.1965	0.9375	0.14	0.13	2.01	1.75	2.76	2.95	2.14	18500	-0.43
198	HM801346-HM801310	1.5000	3.2500	1.1563	1.1250	0.9063	0.03	0.13	2.01	1.93	2.68	3.07	1.07	16400	-0.19
199	25572-25520	1.5000	3.2650	0.9375	1.0000	0.7500	0.03	0.03	1.81	1.81	2.91	3.03	1.74	14500	-0.25

1/ Part numbers are for reference only. Part numbers reflect the cup and cone numbers used by industry and the American Bearing Manufacturers Association (ABMA).
2/ These maximum fillet radii shall be cleared by the bearing corners.
3/ Minus value indicates load center inside cone backface.
* Column headings in the above table refer to bearing characteristics defined in figure 1.

TABLE I. Size codes and dimensions (continued).*

Size code	Part /1 number	d	D	T	B	C	R 2/	r 2/	d_b	d_a	D_b	D_a	K factor	Basic dynamic load ratings (lb.)	a 3/
		Bore	Outside diameter	Bearing width	Cone width	Cup width	Max. shaft fillet radius	Max. housing fillet radius	Recommended shoulder diameters						Effective load center
	Cone-cup								Shaft		Housing			Radial	
200	3875-3820	1.5000	3.3750	1.1875	1.1875	0.9375	0.03	0.13	1.95	1.91	2.87	3.19	1.45	20000	-0.32
201	3876-3820	1.5000	3.3750	1.1875	1.1875	0.9375	0.14	0.13	2.17	1.91	2.87	3.19	1.45	20000	-0.32
202	3583-3525	1.5000	3.4375	1.1875	1.2160	0.9375	0.14	0.13	2.05	1.79	2.95	3.19	1.91	18100	-0.40
203	3580-3525	1.5000	3.4375	1.1875	1.2160	0.9375	0.06	0.13	1.89	1.79	2.95	3.19	1.91	18100	-0.40
204	418-414	1.5000	3.4843	1.0625	1.1450	0.8750	0.14	0.06	2.01	1.75	3.03	3.15	2.22	18600	-0.38
205	4375-4335	1.5000	3.5625	1.5625	1.5900	1.3125	0.06	0.13	2.01	1.91	3.03	3.35	2.05	26700	-0.59
206	49150-49368	1.5000	3.6875	1.2500	1.2500	1.0000	0.14	0.13	2.13	1.89	3.23	3.43	1.62	21800	-0.36
207	440-432	1.5000	3.7500	1.0938	1.1772	0.8750	0.03	0.09	1.83	1.79	3.27	3.43	2.05	20500	-0.36
208	33880-33821	1.5000	3.7500	1.0938	1.1250	0.8750	0.14	0.09	2.13	1.89	3.35	3.54	1.77	20900	-0.30
209	525-522	1.5000	4.0000	1.3750	1.4200	1.0625	0.14	0.13	2.13	1.89	3.50	3.74	2.05	26400	-0.50
210	542-532A	1.5000	4.3750	1.5000	1.4550	1.1875	0.14	0.13	2.17	1.93	3.74	3.94	1.97	27600	-0.48
211	18587-18520	1.5625	2.8750	0.6562	0.6875	0.5000	0.03	0.06	1.79	1.77	2.60	2.72	1.67	8300	-0.11
212	2789-2735X	1.5625	2.8750	0.9375	1.0100	0.7500	0.14	0.03	2.05	1.77	2.60	2.72	1.93	14000	-0.31
213	2789-2720	1.5625	3.0000	0.9375	1.0100	0.7500	0.14	0.13	2.05	1.77	2.60	2.76	1.93	14000	-0.32
214	3382-3321	1.5625	3.0525	1.1563	1.1965	0.9375	0.14	0.13	2.05	1.79	2.68	2.94	2.14	18500	-0.43
215	26880-26822	1.5625	3.1250	0.9375	1.0000	0.7500	0.06	0.03	1.89	1.79	2.80	2.91	1.83	14700	-0.29
216	26881-26822	1.5625	3.1250	0.9375	1.0000	0.7500	0.14	0.03	2.05	1.79	2.80	2.91	1.83	14700	-0.29
217	3382-3339	1.5625	3.1510	1.1563	1.1965	0.9375	0.14	0.06	2.05	1.79	2.80	2.94	2.14	18500	-0.43
218	3382-3320	1.5625	3.1562	1.1563	1.1965	0.9375	0.14	0.13	2.05	1.79	2.76	2.95	2.14	18500	-0.43
219	3382-3331	1.5625	3.1562	1.1563	1.1965	0.9375	0.14	0.03	2.05	1.79	2.83	2.94	2.14	18500	-0.43
220	3386-3320	1.5625	3.1562	1.1563	1.1965	0.9375	0.03	0.13	1.83	1.79	2.76	2.95	2.14	18500	-0.43

1/ Part numbers are for reference only. Part numbers reflect the cup and cone numbers used by industry and the American Bearing Manufacturers Association (ABMA).
2/ These maximum fillet radii shall be cleared by the bearing corners.
3/ Minus value indicates load center inside cone backface.
* Column headings in the above table refer to bearing characteristics defined in figure 1.

TABLE I. Size codes and dimensions (continued).*

Size code	Part /1 number	d	D	T	B	C	R 2/	r 2/	d_b	d_a	D_b	D_a	K factor	Basic dynamic load ratings (lb.)	a 3/
		Bore	Outside diameter	Bearing width	Cone width	Cup width	Max. shaft fillet radius	Max. housing fillet radius	Recommended shoulder diameters						Effective load center
	Cone-cup								Shaft		Housing			Radial	
221	3382-3328	1.5625	3.3125	1.1563	1.1965	0.9375	0.14	0.13	2.05	1.79	2.83	2.99	2.14	18500	-0.43
222	18590-18520	1.6250	2.8750	0.6562	0.6875	0.5000	0.14	0.06	2.09	1.81	2.60	2.72	1.67	8300	-0.11
223	LM501349-LM501310	1.6250	2.8910	0.7700	0.7800	0.5800	0.14	0.03	2.09	1.83	2.64	2.76	1.46	10100	-0.13
224	LM501349-LM501314	1.6250	2.8910	0.8437	0.7800	0.6537	0.14	0.03	2.09	1.83	2.60	2.76	1.46	10100	-0.13
225	11162-11300	1.6250	3.0000	0.7090	0.6844	0.5625	0.06	0.06	1.93	1.83	2.64	2.80	1.20	7800	-0.03
226	24780-24720	1.6250	3.0000	0.8750	0.9063	0.6875	0.14	0.03	2.13	1.85	2.68	2.83	1.49	12300	-0.19
227	26882-26823	1.6250	3.0000	1.0000	1.0000	0.8125	0.14	0.06	2.13	1.85	2.72	2.87	1.83	14700	-0.29
228	26882-26822	1.6250	3.1250	0.9375	1.0000	0.7500	0.14	0.03	2.13	1.85	2.80	2.91	1.83	14700	-0.29
229	26882-26822A	1.6250	3.1250	0.9375	1.0000	0.7500	0.14	0.09	2.13	1.85	2.72	2.91	1.83	14700	-0.29
230	26885-26822	1.6250	3.1250	0.9375	1.0000	0.7500	0.03	0.03	1.89	1.85	2.80	2.91	1.83	14700	-0.29
231	11162-11315	1.6250	3.1496	0.7090	0.6844	0.5625	0.06	0.06	1.93	1.83	2.72	2.87	1.20	7800	-0.03
232	336-332	1.6250	3.1496	0.8268	0.8820	0.7018	0.03	0.05	1.85	1.81	2.87	2.95	2.14	12900	-0.25
233	342-332	1.6250	3.1496	0.8268	0.8820	0.7018	0.14	0.05	2.09	1.81	2.87	2.95	2.14	12900	-0.25
234	26882-26824	1.6250	3.1496	0.9375	1.0000	0.7500	0.14	0.05	2.13	1.85	2.76	2.91	1.83	14700	-0.29
235	26882-28820	1.6250	3.1562	1.0000	1.0000	0.8125	0.14	0.13	2.13	1.85	2.72	2.91	1.83	14700	-0.29
236	M802048-M802011	1.6250	3.2500	1.0450	1.0100	0.7950	0.14	0.03	2.24	1.99	2.76	3.11	1.07	14700	-0.12
237	3877-3820	1.6250	3.3750	1.1875	1.1875	0.9375	0.14	0.13	2.24	1.98	2.87	3.19	1.45	20000	-0.32
238	3877-3821	1.6250	3.3750	1.1875	1.1875	0.9375	0.14	0.05	2.24	1.98	2.95	3.19	1.45	20000	-0.32
239	3880-3820	1.6250	3.3750	1.1875	1.1875	0.9375	0.03	0.13	2.05	1.98	2.87	3.19	1.45	20000	-0.32
240	3576-3525	1.6250	3.4375	1.1875	1.2160	0.9375	0.03	0.13	1.93	1.89	2.95	3.19	1.91	18100	-0.40

1/ Part numbers are for reference only. Part numbers reflect the cup and cone numbers used by industry and the American Bearing Manufacturers Association (ABMA).
2/ These maximum fillet radii shall be cleared by the bearing corners.
3/ Minus value indicates load center inside cone backface.
* Column headings in the above table refer to bearing characteristics defined in figure 1.

TABLE I. Size codes and dimensions (continued).*

Size code	Part /1 number	d	D	T	B	C	R 2/	r 2/	d_b	d_a	D_b	D_a	K factor	Basic dynamic load ratings (lb.)	a 3/
		Bore	Outside diameter	Bearing width	Cone width	Cup width	Max. shaft fillet radius	Max. housing fillet radius	Recommended shoulder diameters						Effective load center
									Shaft		Housing				
	Cone-cup													Radial	
241	3577-3525	1.6250	3.4375	1.1875	1.2160	0.9375	0.14	0.13	2.13	1.89	2.95	3.19	1.91	18100	-0.40
242	3585-3525	1.6250	3.4375	1.1875	1.2160	0.9375	0.06	0.13	1.97	1.89	2.95	3.19	1.91	18100	-0.40
243	44162-44348	1.6250	3.4843	1.0000	0.9330	0.6875	0.09	0.06	2.24	2.00	2.95	3.31	0.75	13600	-0.09
244	419-414	1.6250	3.4843	1.0625	1.1450	0.8750	0.14	0.06	2.13	1.85	3.03	3.15	2.22	18600	-0.38
245	365A-362A	1.6250	3.5000	0.8125	0.8750	0.6501	0.14	0.05	2.17	1.91	3.19	3.31	1.83	14000	-0.17
246	HM803145-HM803110	1.6250	3.5000	1.1875	1.1563	0.9063	0.03	0.13	2.13	2.09	2.91	3.35	1.07	18200	-0.17
247	HM803146-HM803110	1.6250	3.5000	1.1875	1.1563	0.9063	0.14	0.13	2.36	2.09	2.91	3.35	1.07	18200	-0.17
248	HM803146-HM803111	1.6250	3.5000	1.1875	1.1563	0.9063	0.14	0.03	2.36	2.09	2.99	3.35	1.07	18200	-0.17
249	4388-4335	1.6250	3.5625	1.5625	1.5900	1.3125	0.14	0.13	2.24	2.01	3.03	3.35	2.05	26700	-0.59
250	49162-49368	1.6250	3.6875	1.2500	1.2500	1.0000	0.14	0.13	2.24	1.97	3.23	3.43	1.62	21800	-0.36
251	46162-46368	1.6250	3.6875	1.2500	1.2500	1.0313	0.03	0.13	2.05	2.01	3.11	3.43	1.45	20800	-0.31
252	HM804840-HM804810	1.6250	3.7500	1.1875	1.1563	0.9063	0.14	0.13	2.40	2.13	3.19	3.58	1.07	20000	-0.15
253	526-522	1.6250	4.0000	1.3750	1.4200	1.0625	0.14	0.13	2.24	1.97	3.50	3.74	2.05	26400	-0.50
254	HM807035-HM807010	1.6250	4.1250	1.4375	1.4375	1.1250	0.06	0.13	2.36	2.24	3.50	3.94	1.20	27500	-0.29
255	HM807035-HM807011	1.6250	4.1250	1.4375	1.4375	1.1250	0.06	0.03	2.36	2.24	3.58	3.94	1.20	27500	-0.29
256	12168-12303	1.6875	3.0312	0.6875	0.6750	0.4688	0.06	0.06	2.01	1.91	2.68	2.87	1.15	8100	0.00
257	22168-22325	1.6875	3.2500	0.7812	0.7810	0.5937	0.09	0.06	2.05	1.91	2.87	2.99	1.36	10600	-0.10
258	22780-22720	1.6875	3.2500	1.0313	1.0625	0.8125	0.14	0.13	2.20	1.97	2.80	3.03	1.45	14900	-0.25
259	25578-25520	1.6875	3.2650	0.9375	1.0000	0.7500	0.09	0.03	2.09	1.95	2.91	3.03	1.74	14500	-0.25

1/ Part numbers are for reference only. Part numbers reflect the cup and cone numbers used by industry and the American Bearing Manufacturers Association (ABMA).
2/ These maximum fillet radii shall be cleared by the bearing corners.
3/ Minus value indicates load center inside cone backface.
* Column headings in the above table refer to bearing characteristics defined in figure 1.

TABLE I. Size codes and dimensions (continued).*

Size code	Part /1 number	d	D	T	B	C	R 2/	r 2/	d_b	d_a	D_b	D_a	K factor	Basic dynamic load ratings (lb.)	a 3/
		Bore	Outside diameter	Bearing width	Cone width	Cup width	Max. shaft fillet radius	Max. housing fillet radius	Recommended shoulder diameters						Effective load center
	Cone-cup								Shaft		Housing			Radial	
260	3679-3525	1.6875	3.4375	1.1875	1.2160	0.9375	0.14	0.13	2.20	1.95	2.95	3.19	1.91	18100	-0.40
261	LL103049-LL103010	1.7500	2.8125	0.5000	0.5000	0.3750	0.06	0.06	2.01	1.91	2.56	2.68	1.91	5900	-0.05
262	L102849-L102810	1.7500	2.8750	0.7188	0.7188	0.5938	0.06	0.06	2.01	1.93	2.60	2.72	1.83	9300	-0.15
263	12175-12303	1.7500	3.0312	0.6875	0.6750	0.4688	0.06	0.06	2.05	1.95	2.68	2.87	1.15	8100	0.00
264	18685-18620	1.7500	3.1250	0.6875	0.6875	0.5313	0.11	0.06	2.13	1.95	2.80	2.91	1.56	8500	-0.08
265	13175-13318	1.7500	3.1875	0.7500	0.6875	0.5625	SPCL	0.06	1.97	1.97	2.83	2.99	1.11	8300	0.03
266	35176-35326	1.7500	3.2650	0.8750	0.9060	0.6875	0.03	0.03	1.97	1.95	2.99	3.07	1.96	13400	-0.24
267	25580-25520	1.7500	3.2650	0.9375	1.0000	0.7500	0.14	0.03	2.24	1.97	2.91	3.03	1.74	14500	-0.25
268	25581-25520	1.7500	3.2650	0.9375	1.0000	0.7500	0.02	0.03	2.01	1.97	2.91	3.03	1.74	14500	-0.25
269	25582-25520	1.7500	3.2650	0.9375	1.0000	0.7500	0.20	0.03	2.36	1.97	2.91	3.03	1.74	14500	-0.25
270	25580-25521	1.7500	3.2700	0.9375	1.0000	0.7500	0.14	0.13	2.24	1.97	2.83	3.03	1.74	14500	-0.25
271	3578-3520	1.7500	3.3125	1.1875	1.2160	0.9375	0.14	0.13	2.24	2.01	2.91	3.13	1.91	18100	-0.40
272	355-354A	1.7500	3.3465	0.8125	0.8540	0.6875	0.09	0.05	2.13	1.97	3.03	3.15	1.91	13300	-0.19
273	335A-354A	1.7500	3.3465	0.8125	0.8540	0.6875	0.03	0.05	2.01	1.97	3.03	3.15	1.91	13300	-0.19
274	3578-3525	1.7500	3.4375	1.1875	1.2160	0.9375	0.14	0.13	2.24	2.01	2.95	3.19	1.91	18100	-0.40
275	3578-3526	1.7500	3.4375	1.1875	1.2160	0.9375	0.14	0.03	2.24	2.01	3.03	3.19	1.91	18100	-0.40
276	HM803149-HM803110	1.7500	3.5000	1.1875	1.1563	0.9063	0.14	0.13	2.44	2.10	2.91	3.35	1.07	18200	-0.17
277	3782-3720	1.7500	3.6718	1.1875	1.1930	0.9375	0.14	0.13	2.28	2.05	3.23	3.46	1.73	19700	-0.32
278	46175-46368	1.7500	3.6875	1.2500	1.2500	1.0313	0.03	0.13	2.17	2.13	3.11	3.43	1.45	20800	-0.31
279	46176-46368	1.7500	3.6875	1.2500	1.2500	1.0313	0.14	0.13	2.36	2.13	3.11	3.43	1.45	20800	-0.31

1/ Part numbers are for reference only. Part numbers reflect the cup and cone numbers used by industry and the American Bearing Manufacturers Association (ABMA).
2/ These maximum fillet radii shall be cleared by the bearing corners.
3/ Minus value indicates load center inside cone backface.
* Column headings in the above table refer to bearing characteristics defined in figure 1.

TABLE I. Size codes and dimensions (continued).*

Size code	Part /1 number	d	D	T	B	C	R 2/	r 2/	d_b	d_a	D_b	D_a	K factor	Basic dynamic load ratings (lb.)	a 3/
		Bore	Outside diameter	Bearing width	Cone width	Cup width	Max. shaft fillet radius	Max. housing fillet radius	Recommended shoulder diameters						Effective load center
	Cone-cup								Shaft		Housing			Radial	
280	49175-49368	1.7500	3.6875	1.2500	1.2500	1.0000	0.14	0.13	2.32	2.09	3.23	3.43	1.62	21800	-0.36
281	438-432	1.7500	3.7500	1.0938	1.1772	0.8750	0.14	0.09	2.34	2.01	3.27	3.43	2.05	20500	-0.36
282	438-432A	1.7500	3.7500	1.0938	1.1772	0.8750	0.14	0.03	2.24	2.01	3.31	3.43	2.05	20500	-0.36
283	33885-33821	1.7500	3.7500	1.0938	1.1250	0.8750	0.03	0.09	2.09	2.09	3.35	3.54	1.77	20900	-0.30
284	HM804842-HM804810	1.7500	3.7500	1.1875	1.1563	0.9063	0.03	0.13	2.24	2.24	3.19	3.58	1.07	20000	-0.15
285	HM804843-HM804810	1.7500	3.7500	1.1875	1.1563	0.9063	0.14	0.13	2.48	2.24	3.19	3.58	1.07	20000	-0.15
286	3783-3732	1.7500	3.8750	1.1875	1.1930	0.9375	0.25	0.13	2.52	2.05	3.31	3.54	1.73	19700	-0.32
287	49576-49520	1.7500	4.0000	1.2500	1.2500	1.0000	0.03	0.13	2.17	2.13	3.46	3.78	1.46	21300	-0.28
288	527-522	1.7500	4.0000	1.3750	1.4200	1.0625	0.14	0.13	2.32	2.09	3.50	3.74	2.05	26400	-0.50
289	5356-5335	1.7500	4.0625	1.7188	1.7510	1.4375	0.05	0.13	2.28	2.20	3.50	3.82	1.97	33800	-0.63
290	460-453X	1.7500	4.1250	1.1875	1.1542	0.9687	0.14	0.13	2.36	2.13	3.62	3.86	1.74	21800	-0.28
291	55280-45220	1.7500	4.1250	1.1875	1.2188	0.9375	0.03	0.13	2.17	2.13	3.66	3.90	1.76	22600	-0.32
292	59175-59412	1.7500	4.1250	1.4375	1.4375	1.1250	0.14	0.13	2.48	2.20	3.62	3.90	1.45	27400	-0.38
293	HM807040-HM807010	1.7500	4.1250	1.4375	1.4375	1.1250	0.14	0.13	2.60	2.32	3.50	3.94	1.20	27500	-0.29
294	535-532X	1.7500	4.2500	1.4375	1.4550	1.1250	0.14	0.13	2.36	2.13	3.70	3.94	1.97	27600	-0.48
295	615-612A	1.7500	4.7260	1.6250	1.6250	1.2500	0.14	0.13	2.44	2.20	4.06	4.33	1.86	33200	-0.55
296	6277-6220	1.7500	5.0000	2.0000	2.0625	1.6250	0.14	0.13	2.64	2.36	4.25	4.61	1.96	48500	-0.77
297	LM603049-LM603011	1.7812	3.0625	0.7812	0.7812	0.5937	0.14	0.03	2.24	1.97	2.80	2.91	1.37	10400	-0.09
298	25590-25523	1.7960	3.2650	1.0625	1.0000	0.8750	0.14	0.09	2.28	2.01	2.83	3.03	1.74	14500	-0.25

1/ Part numbers are for reference only. Part numbers reflect the cup and cone numbers used by industry and the American Bearing Manufacturers Association (ABMA).
2/ These maximum fillet radii shall be cleared by the bearing corners.
3/ Minus value indicates load center inside cone backface.
* Column headings in the above table refer to bearing characteristics defined in figure 1.

TABLE I. Size codes and dimensions (continued).*

Size code	Part /1 number	d	D	T	B	C	R 2/	r 2/	d_b	d_a	D_b	D_a	K factor	Basic dynamic load ratings (lb.)	a 3/
		Bore	Outside diameter	Bearing width	Cone width	Cup width	Max. shaft fillet radius	Max. housing fillet radius	Recommended shoulder diameters						Effective load center
	Cone-cup								Shaft		Housing			Radial	
299	18690-18620	1.8125	3.1250	0.6875	0.6875	0.5313	0.11	0.06	2.20	2.01	2.80	2.91	1.56	8500	-0.08
300	13181-13318	1.8125	3.1875	0.7500	0.6875	0.5625	0.03	0.06	2.95	2.05	2.83	2.99	1.11	8300	-0.03
301	25592-25520	1.8125	3.2650	0.9375	1.0000	0.7500	0.14	0.03	2.28	2.05	2.91	3.03	1.74	14500	-0.25
302	359A-354A	1.8125	3.3465	0.8125	0.8540	0.6875	0.14	0.05	2.24	2.01	3.03	3.15	1.91	13300	-0.19
303	359-S-354A	1.8125	3.3465	0.8125	0.8540	0.6875	0.09	0.05	2.17	2.01	3.03	3.15	1.91	13300	-0.19
304	2984-2924	1.8125	3.3465	1.0000	1.0082	0.8125	0.14	0.05	2.28	2.05	2.99	3.15	1.69	15100	-0.25
305	359-S-352	1.8125	3.5480	0.9055	0.8540	0.8586	0.09	0.09	2.17	2.01	3.07	3.23	1.91	13300	-0.19
306	3777-3720	1.8125	3.6718	1.1875	1.1930	0.9375	0.14	0.13	2.36	2.09	3.23	3.46	1.73	19700	-0.32
307	436-432	1.8125	3.7500	1.0938	1.1772	0.8750	0.14	0.09	2.32	2.05	3.27	3.43	2.05	20500	-0.36
308	369A-362A	1.8750	3.5000	0.8125	0.8750	0.6501	0.14	0.05	2.36	2.09	3.19	3.31	1.83	14000	-0.17
309	369-S-362A	1.8750	3.5000	0.8125	0.8750	0.6501	0.09	0.05	2.24	2.09	3.19	3.31	1.83	14000	-0.17
310	M804048-M804010	1.8750	3.5000	1.0000	1.0000	0.7500	0.03	0.13	2.24	2.19	3.03	3.35	1.07	15900	-0.07
311	M804049-M804010	1.8750	3.5000	1.0000	1.0000	0.7500	0.14	0.13	2.48	2.19	3.03	3.35	1.07	15900	-0.07
312	3778-3720	1.8750	3.6718	1.1875	1.1930	0.9375	0.25	0.13	2.64	2.17	3.23	3.46	1.73	19700	-0.32
313	3779-3720	1.8750	3.6718	1.1875	1.1930	0.9375	0.14	0.13	2.40	2.17	3.23	3.46	1.73	19700	-0.32
314	HM804846-HM804810	1.8750	3.7500	1.1875	1.1563	0.9063	0.14	0.13	2.60	2.26	3.19	3.58	1.07	20000	-0.15
315	386A-382A	1.8750	3.8125	0.8268	0.8640	0.6250	0.03	0.03	2.20	2.17	3.50	3.62	1.65	14800	-0.12
316	528-522	1.8750	4.0000	1.3750	1.4200	1.0625	0.14	0.13	2.44	2.17	3.50	3.74	2.05	26400	-0.50
317	463-453X	1.8750	4.1250	1.1875	1.1542	0.9687	0.19	0.13	2.56	2.20	3.62	3.86	1.74	21800	-0.28
318	467-453X	1.8750	4.1250	1.1875	1.1542	0.9687	0.03	0.13	2.24	2.20	3.62	3.86	1.74	21800	-0.28

1/ Part numbers are for reference only. Part numbers reflect the cup and cone numbers used by industry and the American Bearing Manufacturers Association (ABMA).
2/ These maximum fillet radii shall be cleared by the bearing corners.
3/ Minus value indicates load center inside cone backface.
* Column headings in the above table refer to bearing characteristics defined in figure 1.

TABLE I. Size codes and dimensions (continued).*

Size code	Part /1 number	d	D	T	B	C	R 2/	r 2/	d_b	d_a	D_b	D_a	K factor	Basic dynamic load ratings (lb.)	a 3/
		Bore	Outside diameter	Bearing width	Cone width	Cup width	Max. shaft fillet radius	Max. housing fillet radius	Recommended shoulder diameters						Effective load center
	Cone-cup								Shaft		Housing			Radial	
319	4582-45220	1.8750	4.1250	1.1875	1.2188	0.9375	0.14	0.13	2.48	2.24	3.66	3.90	1.76	22600	-0.32
320	617-612A	1.8750	4.7260	1.6250	1.6250	1.2500	0.14	0.13	2.56	2.28	4.06	4.33	1.86	33200	-0.55
321	HM804849-HM804810	1.9060	3.7500	1.1875	1.1563	0.9063	0.14	0.13	2.60	2.27	3.19	3.58	1.07	20000	-0.15
322	365-S-362A	1.9375	3.5000	0.8125	0.8750	0.6501	0.03	0.05	2.17	2.13	3.19	3.31	1.83	14000	-0.17
323	3781-3720	1.9375	3.6718	1.1875	1.1930	0.9375	0.14	0.03	2.44	2.20	3.31	3.46	1.73	19700	-0.32
324	5395-5335	1.9375	4.0625	1.7188	1.7510	1.4375	0.14	0.13	2.60	2.36	3.50	3.82	1.97	33800	-0.63
325	HM807044-HM807010	1.9375	4.1250	1.4375	1.4375	1.1250	0.14	0.13	2.72	2.48	3.50	3.94	1.20	27500	-0.29
326	65390-65320	1.9375	4.5000	1.7500	1.7500	1.3750	0.14	0.13	2.76	2.36	3.82	4.21	1.36	35700	-0.49
327	HH506348-HH506310	1.9375	4.5000	1.7500	1.7500	1.4200	0.14	0.13	2.80	2.40	3.82	4.21	1.45	39100	-0.53
328	LL205449-LL205410	2.0000	3.0625	0.5000	0.5000	0.3750	0.06	0.06	2.24	2.17	2.80	2.91	1.74	6200	0.00
329	L305649-L305610	2.0000	3.1875	0.7188	0.7188	0.5625	0.06	0.06	2.28	2.20	2.87	3.03	1.64	9900	-0.10
330	LM104949-LM104911	2.0000	3.2500	0.8500	0.8750	0.6500	0.14	0.05	2.44	2.17	2.95	3.07	1.91	13200	-0.23
331	LM104949-LM104912	2.0000	3.2650	0.8500	0.8750	0.6500	0.14	0.05	2.44	2.17	2.95	3.06	1.91	13200	-0.23
332	18790-18720	2.0000	3.3465	0.6875	0.6875	0.5313	0.14	0.06	2.44	2.20	3.03	3.15	1.44	8900	-0.03
333	18200-18337	2.0000	3.3750	0.7500	0.7190	0.5000	0.06	0.06	2.32	2.20	2.99	3.19	1.03	8400	0.08
334	18790-18724	2.0000	3.5000	0.6875	0.6875	0.5313	0.14	0.05	2.44	2.20	3.07	3.23	1.44	8900	-0.03
335	368-362A	2.0000	3.5000	0.8125	0.8750	0.6501	0.06	0.05	2.28	2.20	3.19	3.31	1.83	14000	-0.17
336	368A-362A	2.0000	3.5000	0.8125	0.8750	0.6501	0.14	0.05	2.44	2.20	3.19	3.31	1.83	14000	-0.17

1/ Part numbers are for reference only. Part numbers reflect the cup and cone numbers used by industry and the American Bearing Manufacturers Association (ABMA).
2/ These maximum fillet radii shall be cleared by the bearing corners.
3/ Minus value indicates load center inside cone backface.
* Column headings in the above table refer to bearing characteristics defined in figure 1.

TABLE I. Size codes and dimensions (continued).*

Size code	Part /1 number	d	D	T	B	C	R 2/	r 2/	d_b	d_a	D_b	D_a	K factor	Basic dynamic load ratings (lb.)	a 3/
		Bore	Outside diameter	Bearing width	Cone width	Cup width	Max. shaft fillet radius	Max. housing fillet radius	Recommended shoulder diameters						Effective load center
	Cone-cup								Shaft		Housing			Radial	
337	370A-362A	2.0000	3.5000	0.8125	0.8750	0.6501	0.20	0.05	2.56	2.20	3.19	3.31	1.83	14000	-0.17
338	368-362	2.0000	3.5433	0.7874	0.8750	0.6250	0.06	0.08	2.28	2.20	3.19	3.31	1.83	14000	-0.17
339	368A-362	2.0000	3.5433	0.7874	0.8750	0.6250	0.14	0.08	2.44	2.20	3.19	3.31	1.83	14000	-0.17
340	368A-363	2.0000	3.5433	0.7874	0.8750	0.7874	0.14	0.03	2.44	2.20	3.23	3.34	1.83	14000	-0.17
341	28580-28521	2.0000	3.6250	0.9688	1.0000	0.7813	0.14	0.03	2.48	2.24	3.27	3.43	1.55	16000	-0.19
342	28580A-28521	2.0000	3.6250	0.9688	1.0000	0.7813	0.03	0.03	2.28	2.24	3.27	3.43	1.55	16000	-0.19
343	375-374	2.0000	3.6718	0.8125	0.8750	0.5938	0.09	0.05	2.36	2.24	3.35	3.46	1.73	14200	-0.15
344	3775-3720	2.0000	3.6718	1.1875	1.1930	0.9375	0.03	0.13	2.28	2.28	3.23	3.46	1.73	19700	-0.32
345	3780-3720	2.0000	3.6718	1.1875	1.1930	0.9375	0.14	0.13	2.52	2.28	3.23	3.46	1.73	19700	-0.32
346	3780-3730	2.0000	3.6718	1.1875	1.1930	0.9375	0.14	0.03	2.52	2.28	3.31	3.46	1.73	19700	-0.32
347	3784-3720	2.0000	3.6718	1.1875	1.1930	0.9375	0.25	0.13	2.76	2.28	3.23	3.46	1.73	19700	-0.32
348	33889-33821	2.0000	3.7500	1.0938	1.1250	0.8750	0.14	0.09	2.52	2.28	3.35	3.54	1.77	20900	-0.30
349	3780-3726	2.0000	3.7500	1.1875	1.1930	0.9375	0.14	0.13	2.52	2.28	3.27	3.50	1.73	19700	-0.32
350	385A-382A	2.0000	3.8125	0.8268	0.8640	0.6250	0.09	0.03	2.40	2.36	3.50	3.62	1.65	14800	-0.12
351	385AX-382A	2.0000	3.8125	0.8268	0.8640	0.6250	0.03	0.03	2.28	2.28	3.50	3.62	1.65	14800	-0.12
352	28678-28622	2.0000	3.8437	0.9688	0.9688	0.7656	0.14	0.03	2.56	2.28	3.46	3.62	1.45	16800	-0.13
353	3780-3732	2.0000	3.8750	1.1875	1.1930	0.9375	0.14	0.13	2.52	2.28	3.31	3.54	1.73	19700	-0.32
354	49585-49522	2.0000	4.0000	1.2500	1.2500	1.0000	0.14	0.03	2.60	2.32	3.54	3.78	1.46	21300	-0.28
355	49585-49520	2.0000	4.0000	1.2500	1.2500	1.0000	0.14	0.13	2.60	2.32	3.46	3.78	1.46	21300	-0.28
356	529-522	2.0000	4.0000	1.3750	1.4200	1.0625	0.03	0.13	2.32	2.28	3.50	3.74	2.05	26400	-0.50
357	529X-522	2.0000	4.0000	1.3750	1.4200	1.0625	0.14	0.13	2.56	2.28	3.50	3.74	2.05	26400	-0.50

1/ Part numbers are for reference only. Part numbers reflect the cup and cone numbers used by industry and the American Bearing Manufacturers Association (ABMA).
2/ These maximum fillet radii shall be cleared by the bearing corners.
3/ Minus value indicates load center inside cone backface.
* Column headings in the above table refer to bearing characteristics defined in figure 1.

TABLE I. Size codes and dimensions (continued).*

Size code	Part /1 number	d	D	T	B	C	R 2/	r 2/	d_b	d_a	D_b	D_a	K factor	Basic dynamic load ratings (lb.)	a 3/
		Bore	Outside diameter	Bearing width	Cone width	Cup width	Max. shaft fillet radius	Max. housing fillet radius	Recommended shoulder diameters						Effective load center
	Cone-cup								Shaft		Housing			Radial	
358	455-453X	2.0000	4.1250	1.1875	1.1542	1.9687	0.03	0.13	2.36	2.32	3.62	3.86	1.74	21800	-0.28
359	455-S-453X	2.0000	4.1250	1.1875	1.1542	0.9687	0.14	0.13	2.56	2.32	3.62	3.86	1.74	21800	-0.28
360	45284-45220	2.0000	4.1250	1.1875	1.2188	0.9375	0.25	0.13	2.80	2.32	3.66	3.90	1.76	22600	-0.32
361	45285-45220	2.0000	4.1250	1.1875	1.2188	0.9375	0.09	0.13	2.48	2.32	3.66	3.90	1.76	22600	-0.32
362	45285A-45220	2.0000	4.1250	1.1875	1.2188	0.9375	0.03	0.13	2.36	2.32	3.66	3.90	1.76	22600	-0.32
363	59200-59412	2.0000	4.1250	1.4375	1.4375	1.1250	0.14	0.13	2.68	2.40	3.62	3.90	1.45	27400	-0.38
364	59201-59412	2.0000	4.1250	1.4375	1.4375	1.1250	0.03	0.13	2.44	2.40	3.62	3.90	1.45	27400	-0.38
365	HM807046-HM807010	2.0000	4.1250	1.4375	1.4375	1.1250	0.14	0.13	2.76	2.48	3.50	3.94	1.20	27500	-0.29
366	537-532X	2.0000	4.2500	1.4375	1.4550	1.1250	0.14	0.13	2.56	2.32	3.70	3.94	1.97	27600	-0.48
367	398-394A	2.0000	4.3307	0.8661	0.8660	0.7411	0.03	0.05	2.44	2.40	3.98	4.11	1.45	16200	-0.03
368	3975-3920	2.0000	4.4375	1.1875	1.1830	0.9375	0.14	0.13	2.68	2.40	3.90	4.17	1.45	22400	-0.18
369	39573-39520	2.0000	4.4375	1.1875	1.1830	0.9375	0.03	0.13	2.44	2.40	3.98	4.21	1.72	27000	-0.26
370	39575-39520	2.0000	4.4375	1.1875	1.1830	0.9375	0.14	0.13	2.68	2.40	3.98	4.21	1.72	27000	-0.26
371	65395-65320	2.0000	4.5000	1.7500	1.7500	1.3750	0.14	0.13	2.83	2.36	3.82	4.21	1.36	35700	-0.49
372	619-612A	2.0000	4.7260	1.6250	1.6250	1.2500	0.14	0.13	2.64	2.40	4.06	4.33	1.86	33200	-0.55
373	619-612	2.0000	4.7500	1.6250	1.6250	1.2500	0.14	0.13	2.64	2.40	4.13	4.33	1.86	33200	-0.55
374	555-553X	2.0000	4.8125	1.5000	1.4440	1.1875	0.09	0.13	2.60	2.44	4.25	4.53	1.69	30700	-0.37
375	555-552A	2.0000	4.8750	1.5000	1.4440	1.1875	0.09	0.13	2.60	2.44	4.29	4.57	1.69	30700	-0.37
376	65200-65500	2.0000	5.0000	1.7500	1.7500	1.3750	0.14	0.13	2.95	2.72	4.21	4.69	1.20	33300	-0.37
377	28584-28512	2.0625	3.6250	0.9688	1.0000	0.7813	0.14	0.03	2.56	2.28	3.27	3.43	1.55	16000	-0.19
378	3767-3720	2.0625	3.6718	1.1875	1.1930	0.9375	0.09	0.13	2.48	2.32	3.23	3.46	1.73	19700	-0.32

1/ Part numbers are for reference only. Part numbers reflect the cup and cone numbers used by industry and the American Bearing Manufacturers Association (ABMA).
2/ These maximum fillet radii shall be cleared by the bearing corners.
3/ Minus value indicates load center inside cone backface.
* Column headings in the above table refer to bearing characteristics defined in figure 1.

TABLE I. Size codes and dimensions (continued).*

Size code	Part /1 number	d	D	T	B	C	R 2/	r 2/	d_b	d_a	D_b	D_a	K factor	Basic dynamic load ratings (lb.)	a 3/
		Bore	Outside diameter	Bearing width	Cone width	Cup width	Max. shaft fillet radius	Max. housing fillet radius	Recommended shoulder diameters						Effective load center
	Cone-cup								Shaft		Housing			Radial	
379	33890-33821	2.0625	3.7500	1.0938	1.1250	0.8750	0.06	0.09	2.40	2.32	3.35	3.54	1.77	20900	-0.30
380	33891-33821	2.0625	3.7500	1.0938	1.1250	0.8750	0.14	0.09	2.60	2.32	3.35	3.54	1.77	20900	-0.30
381	468-453X	2.0625	4.1250	1.1875	1.1542	0.9687	0.06	0.13	2.44	2.36	3.62	3.86	1.74	21800	-0.28
382	LM806649-LM806610	2.1250	3.5000	0.7500	0.7500	0.5312	0.09	0.08	2.48	2.36	3.15	3.35	1.07	10600	0.09
383	33895-33821	2.1250	3.7500	1.0938	1.1250	0.8750	0.06	0.09	2.48	2.36	3.35	3.54	1.77	20900	-0.30
384	33895-33822	2.1250	3.7500	1.0938	1.1250	0.8750	0.06	0.03	2.48	2.36	3.39	3.54	1.77	20900	-0.30
385	389A-382A	2.1250	3.8125	0.8268	0.8640	0.6250	0.03	0.03	2.40	2.36	3.50	3.62	1.65	14800	-0.12
386	456-453X	2.1250	4.1250	1.1875	1.1542	0.9687	0.14	0.13	2.68	2.40	3.62	3.86	1.74	21800	-0.28
387	45287-45220	2.1250	4.1250	1.1875	1.2188	0.9375	0.03	0.13	2.44	2.44	3.66	3.90	1.76	22600	-0.32
388	HM807049-HM807010	2.1250	4.1250	1.4375	1.4375	1.1250	0.14	0.13	2.87	2.48	3.50	3.94	1.20	27500	-0.29
389	HM807049A-HM807010	2.1250	4.1250	1.4375	1.4375	1.1250	0.06	0.13	2.72	2.48	3.50	3.94	1.20	27500	-0.29
390	4595-4535	2.1250	4.1250	1.5625	1.5810	1..3125	0.14	0.13	2.76	2.48	3.54	3.90	1.74	28700	-0.49
391	539-532X	2.1250	4.2500	1.4375	1.4550	1.1250	0.14	0.13	2.68	2.40	3.70	3.94	1.97	27600	-0.48
392	539A-532X	2.1250	4.2500	1.4375	1.4550	1.1250	0.22	0.13	2.83	2.40	3.70	3.94	1.97	27600	-0.48
393	539-532A	2.1250	4.3750	1.5000	1.4550	1.1875	0.14	0.13	2.68	2.40	3.74	3.94	1.97	27600	-0.48
394	39578-39520	2.1250	4.4375	1.1875	1.1875	0.9375	0.14	0.13	2.76	2.52	3.98	4.21	1.72	27000	-0.26
395	621-612	2.1250	4.7500	1.6250	1.6250	1.2500	0.14	0.13	2.76	2.48	4.13	4.33	1.86	33200	-0.55
396	5578-5535	2.1250	4.8125	1.7188	1.7230	1.4375	0.14	0.13	2.87	2.64	4.17	4.57	1.63	37700	-0.48
397	557-S-552A	2.1250	4.8750	1.5000	1.4440	1.1875	0.14	0.13	2.80	2.56	4.29	4.57	1.69	30700	-0.37
398	65212-65500	2.1250	5.0000	1.7500	1.7500	1.3750	0.14	0.13	3.03	2.80	4.21	4.69	1.20	33000	-0.37

1/ Part numbers are for reference only. Part numbers reflect the cup and cone numbers used by industry and the American Bearing Manufacturers Association (ABMA).
2/ These maximum fillet radii shall be cleared by the bearing corners.
3/ Minus value indicates load center inside cone backface.
* Column headings in the above table refer to bearing characteristics defined in figure 1.

TABLE I. Size codes and dimensions (continued).*

Size code	Part /1 number	d	D	T	B	C	R 2/	r 2/	d_b	d_a	D_b	D_a	K factor	Basic dynamic load ratings (lb.)	a 3/
		Bore	Outside diameter	Bearing width	Cone width	Cup width	Max. shaft fillet radius	Max. housing fillet radius	Recommended shoulder diameters						Effective load center
	Cone-cup								Shaft		Housing			Radial	
399	6280-6220	2.1250	5.0000	2.0000	1.0625	1.6250	0.14	0.13	2.91	2.64	4.25	4.61	1.96	48500	-0.77
400	636-632	2.1250	5.3750	1.6250	1.6250	1.2500	0.14	0.13	2.87	2.64	4.65	4.92	1.61	37400	-0.44
401	28680-28622	2.1875	3.8437	0.9688	0.9688	0.7656	0.14	0.03	2.68	2.44	3.46	3.62	1.45	16800	-0.13
402	5566-5535	2.1875	4.8125	1.7188	1.7230	1.4375	0.05	0.13	2.76	2.68	4.17	4.57	1.63	37700	-0.48
403	HM813840-HM813810	2.1875	5.0000	1.4375	1.4375	1.0625	0.14	0.13	2.99	2.76	4.37	4.76	1.16	31200	-0.15
404	L507949-L507910	2.2500	3.4375	0.7188	0.7188	0.5625	0.06	0.06	2.56	2.44	3.11	3.27	1.50	9400	-0.03
405	387-382A	2.2500	3.8125	0.8269	0.8640	0.6250	0.09	0.03	2.60	2.44	3.50	3.62	1.65	14800	-0.12
406	387A-382A	2.2500	3.8125	0.8268	0.8640	0.6250	0.14	0.03	2.72	2.44	3.50	3.62	1.65	14800	-0.12
407	387AS-382A	2.2500	3.8125	0.8268	0.8640	0.6250	0.20	0.03	2.83	2.44	3.50	3.62	1.65	14800	-0.12
408	387-S-382A	2.2500	3.8125	0.8268	0.8640	0.6250	0.03	0.03	2.48	2.44	3.50	3.62	1.65	14800	-0.12
409	387A-382-S	2.2500	3.8125	1.0000	0.8640	0.7982	0.14	0.09	2.72	2.44	3.50	3.58	1.65	14800	-0.12
410	28682-28622	2.2500	3.8437	0.9688	0.9688	0.7656	0.14	0.03	2.76	2.44	3.46	3.62	1.45	16800	-0.13
411	387A-382	2.2500	0.8750	0.8268	0.8640	0.7018	0.14	0.03	2.72	2.44	3.54	3.62	1.65	14800	-0.12
412	387-382	2.2500	3.8750	0.8268	0.8640	0.7018	0.09	0.03	2.60	2.44	3.54	3.62	1.65	14800	-0.12
413	387-383A	2.2500	3.9370	0.8268	0.8640	0.7018	0.14	0.08	2.72	2.44	3.50	3.66	1.65	14800	-0.12
414	462-453X	2.2500	4.1250	1.1875	1.1542	0.9687	0.09	0.13	2.64	2.48	3.62	3.86	1.74	21800	-0.28
415	469-453X	2.2500	4.1250	1.1875	1.1542	0.9687	0.14	0.13	2.76	2.48	3.62	3.86	1.74	21800	-0.28
416	45289-45220	2.2500	4.1250	1.1875	1.2188	0.9375	0.03	0.13	2.56	2.56	3.66	3.90	1.76	22600	-0.32
417	45290-45220	2.2500	4.1250	1.1875	1.2188	0.9375	0.09	0.13	2.68	2.56	3.66	3.90	1.76	22600	-0.32
418	45291-45220	2.2500	4.1250	1.1875	1.2188	0.9375	0.25	0.13	2.99	2.56	3.66	3.90	1.76	22600	-0.32

1/ Part numbers are for reference only. Part numbers reflect the cup and cone numbers used by industry and the American Bearing Manufacturers Association (ABMA).
2/ These maximum fillet radii shall be cleared by the bearing corners.
3/ Minus value indicates load center inside cone backface.
* Column headings in the above table refer to bearing characteristics defined in figure 1.

TABLE I. Size codes and dimensions (continued).*

Size code	Part /1 number	d	D	T	B	C	R 2/	r 2/	d_b	d_a	D_b	D_a	K factor	Basic dynamic load ratings (lb.)	a 3/
		Bore	Outside diameter	Bearing width	Cone width	Cup width	Max. shaft fillet radius	Max. housing fillet radius	Recommended shoulder diameters						Effective load center
	Cone-cup								Shaft		Housing			Radial	
419	45291-45221	2.2500	4.1250	1.1875	1.2188	0.9375	0.25	0.03	2.99	2.56	3.74	3.90	1.76	22600	-0.32
420	469-453A	2.2500	4.2500	1.0938	1.1542	0.8750	0.14	0.03	2.76	2.48	3.82	3.94	1.74	21800	-0.28
421	462-454	2.2500	4.3307	1.0943	1.1542	1.0630	0.09	0.08	2.64	2.48	3.78	3.94	1.74	21800	-0.28
422	390-394A	2.2500	4.3307	0.8661	0.8660	0.7411	0.09	0.05	2.76	2.60	3.98	4.11	1.45	16200	-0.03
423	469-454	2.2500	4.3307	1.0943	1.1542	1.0630	0.14	0.08	2.76	2.48	3.78	3.98	1.74	21800	-0.28
424	3979-3920	2.7500	4.4375	1.1875	1.1830	0.9375	0.14	0.13	2.83	2.60	3.90	4.17	1.45	22400	-0.18
425	39580-39520	2.2500	4.4375	1.1875	1.1875	0.9375	0.14	0.13	2.83	2.60	3.98	4.21	1.72	27000	-0.26
426	39581-39520	2.2500	4.4375	1.1875	1.1875	0.9375	0.31	0.13	3.19	2.60	3.98	4.21	1.72	27000	-0.26
427	33225-33462	2.2500	4.6250	1.1875	1.1875	0.9375	0.14	0.13	2.91	2.68	4.09	4.41	1.34	22300	-0.11
428	623-612	2.2500	4.7500	1.6250	1.6250	1.2500	0.14	0.13	2.83	2.60	4.13	4.33	1.86	33200	-0.55
429	555-S-552A	2.2500	4.8750	1.5000	1.4440	1.1875	0.14	0.13	2.87	2.64	4.29	4.57	1.69	30700	-0.37
430	65225-65500	2.2500	5.0000	1.7500	1.7500	1.3750	0.14	0.13	3.15	2.80	4.21	4.69	1.20	33300	-0.37
431	6375-6320	2.2500	5.3447	2.1250	2.2050	1.7500	0.17	0.13	3.15	2.95	5.08	5.51	1.80	51000	-0.76
432	6455-6420	2.2500	5.8750	2.1250	2.1350	1.7500	0.14	0.13	3.19	2.95	5.08	5.51	1.61	55100	-0.59
433	3981-3920	2.3125	4.4375	1.1875	1.1830	0.9375	0.14	0.13	2.87	2.64	3.90	4.17	1.45	22400	-0.18
434	28985-28919	2.3750	3.9362	0.9687	1.0000	0.7500	0.14	0.06	2.87	2.64	3.54	3.78	1.37	17200	-0.10
435	28985-28921	2.3750	3.9370	1.0000	1.0000	0.7813	0.14	0.13	2.87	2.64	3.50	3.78	1.37	17200	-0.10
436	28985-28920	2.3750	4.0000	1.0000	1.0000	0.7813	0.14	0.13	2.87	2.64	3.54	3.82	1.37	17200	-0.10
437	3980-3920	2.3750	4.4375	1.1875	1.1830	0.9375	0.14	0.13	2.95	2.68	3.90	4.17	1.45	22400	-0.18
438	HM212044-HM212010	2.3750	4.8125	1.5000	1.5100	1.1700	0.31	0.06	3.35	2.76	4.33	4.57	1.73	36100	-0.43

1/ Part numbers are for reference only. Part numbers reflect the cup and cone numbers used by industry and the American Bearing Manufacturers Association (ABMA).
2/ These maximum fillet radii shall be cleared by the bearing corners.
3/ Minus value indicates load center inside cone backface.
* Column headings in the above table refer to bearing characteristics defined in figure 1.

TABLE I. Size codes and dimensions (continued).*

Size code	Part /1 number	d	D	T	B	C	R 2/	r 2/	d_b	d_a	D_b	D_a	K factor	Basic dynamic load ratings (lb.)	a 3/
		Bore	Outside diameter	Bearing width	Cone width	Cup width	Max. shaft fillet radius	Max. housing fillet radius	Recommended shoulder diameters						Effective load center
	Cone-cup								Shaft		Housing			Radial	
439	HM212044-HM212011	2.3750	4.8125	1.5000	1.5100	1.1700	0.31	0.13	3.35	2.76	4.25	4.57	1.73	36100	-0.43
440	5583-5535	2.3750	4.8125	1.7188	1.7230	1.4375	0.14	0.13	3.07	2.83	4.17	4.57	1.63	37700	-0.48
441	558-552A	2.3750	4.8750	1.5000	1.4440	1.1875	0.09	0.13	2.87	2.72	4.29	4.57	1.69	30700	-0.37
442	HM813841-HM813810	2.3750	5.0000	1.4375	1.4375	1.0625	0.14	0.06	3.15	2.87	4.45	4.76	1.16	31200	-0.15
443	HM813841A-HM813810	2.3750	5.0000	1.4375	1.4375	1.0625	0.06	0.13	2.99	2.87	4.37	4.76	1.16	31200	-0.15
444	65237-65500	2.3750	5.0000	1.7500	1.7500	1.3750	0.14	0.13	3.23	2.79	4.21	4.69	1.20	33300	-0.37
445	65237A-65500	2.3750	5.0000	1.7500	1.7500	1.3750	0.06	0.13	3.07	2.79	4.21	4.69	1.20	33300	-0.37
446	637-633	2.3750	5.1250	1.6250	1.6250	1.2500	0.14	0.13	3.07	2.83	4.57	4.88	1.61	37400	-0.44
447	H715332-H715311	2.3750	5.3750	1.8125	1.8125	1.4375	0.14	0.13	3.31	3.07	4.65	5.20	1.24	43000	-0.33
448	HH814542-HH814510	2.3750	6.0000	2.0750	2.0750	1.6250	0.14	0.13	3.50	3.27	5.12	5.63	1.20	51000	-0.43
449	392-394A	2.4375	4.3307	0.8661	0.8660	0.7411	0.03	0.05	2.76	2.72	3.98	4.11	1.45	16200	-0.03
450	H715334-H715311	2.4375	5.3750	1.8125	1.8125	1.4375	0.14	0.13	3.39	3.11	4.65	5.20	1.24	43000	-0.34
451	L610549-L610510	2.5000	3.1788	0.7500	0.7500	0.5398	0.06	0.06	2.80	2.72	3.78	4.06	1.38	10900	0.02
452	LL510749-LL510710	2.5000	3.6250	0.5313	0.5000	0.3750	0.06	0.06	2.76	2.68	3.39	3.46	1.44	6400	0.12
453	L610549-L610510	2.5000	3.7188	0.7500	0.7500	0.5938	0.06	0.06	2.80	2.72	3.39	3.58	1.38	10900	0.02
454	39250-39412	2.5000	4.1250	0.8438	0.8661	0.6250	0.08	0.08	2.87	2.72	3.78	3.94	1.51	15800	-0.06
455	29585-29520	2.5000	4.2500	1.0000	1.0000	0.7500	0.14	0.13	3.03	2.80	3.78	4.06	1.27	14200	-0.03
456	29585-29522	2.5000	4.2500	1.0000	1.0000	0.7500	0.14	0.03	3.03	2.80	3.86	4.06	1.27	14200	-0.03

1/ Part numbers are for reference only. Part numbers reflect the cup and cone numbers used by industry and the American Bearing Manufacturers Association (ABMA).
2/ These maximum fillet radii shall be cleared by the bearing corners.
3/ Minus value indicates load center inside cone backface.
* Column headings in the above table refer to bearing characteristics defined in figure 1.

TABLE I. Size codes and dimensions (continued).*

Size code	Part /1 number	d	D	T	B	C	R 2/	r 2/	d_b	d_a	D_b	D_a	K factor	Basic dynamic load ratings (lb.)	a 3/
		Bore	Outside diameter	Bearing width	Cone width	Cup width	Max. shaft fillet radius	Max. housing fillet radius	Recommended shoulder diameters						Effective load center
	Cone-cup								Shaft		Housing			Radial	
457	29586-29520	2.5000	4.2500	1.0000	1.0000	0.7500	0.06	0.13	2.87	2.80	3.75	4.06	1.27	14200	-0.03
458	390A-394A	2.5000	4.3307	0.8661	0.8661	0.7411	0.06	0.05	2.87	2.76	3.98	4.11	1.45	16200	-0.03
459	390A-394AS	2.5000	4.3307	0.8661	0.8660	0.7411	0.06	0.13	2.87	2.76	3.90	4.11	1.45	16200	-0.03
460	395-394A	2.5000	4.3307	0.8661	0.8660	0.7411	0.14	0.05	3.03	2.76	3.98	4.11	1.45	16200	-0.03
461	29586-29521	2.5000	4.3307	1.0000	1.0000	0.7500	0.06	0.05	2.87	2.80	3.90	4.09	1.27	14200	-0.03
462	29585-29521	2.5000	4.3307	1.0000	1.0000	0.7500	0.14	0.05	3.03	2.80	3.90	4.09	1.27	14200	-0.03
463	3982-3920	2.5000	4.4375	1.1875	1.1830	0.9375	0.14	0.13	3.03	2.80	3.90	4.17	1.45	22400	-0.18
464	39585-39520	2.5000	4.4375	1.1875	1.1875	0.9375	0.14	0.13	3.03	2.80	3.98	4.21	1.72	27000	-0.26
465	39585A-39520	2.5000	4.4375	1.1875	1.1875	0.9375	0.03	0.13	2.83	2.80	3.98	4.21	1.72	27000	-0.26
466	477-472	2.5000	4.7244	1.1730	1.1420	0.9542	0.03	0.08	2.87	2.83	4.21	4.49	1.52	23100	-0.16
467	483-472	2.5000	4.7244	1.1730	1.1420	0.9542	0.14	0.08	3.07	2.83	4.21	4.49	1.52	23100	-0.16
468	HM212046-HM212011	2.5000	4.8125	1.5000	1.5100	1.1700	0.14	0.13	3.15	2.87	4.25	4.57	1.73	36100	-0.43
469	HM212047-HM212011	2.5000	4.8125	1.5000	1.5100	1.1700	0.28	0.13	3.43	2.87	4.25	4.57	1.73	36100	-0.43
470	5584-5535	2.5000	4.8125	1.7188	1.1730	1.4375	0.14	0.13	3.19	2.95	4.17	4.57	1.63	37700	-0.48
471	559-552A	2.5000	4.8750	1.5000	1.4440	1.1875	0.14	0.13	3.07	2.83	4.29	4.57	1.69	30700	-0.37
472	565-563	2.5000	5.0000	1.4375	1.4240	1.1250	0.14	0.13	3.15	2.87	4.41	4.72	1.61	29200	-0.32
473	HM813842-HM813811	2.5000	5.0000	1.4375	1.4375	1.0625	0.14	0.06	3.23	2.99	4.45	4.76	1.16	31200	-0.15
474	HM813842-HM813810	2.5000	5.0000	1.4375	1.4375	1.0625	0.14	0.13	3.23	2.99	4.37	4.76	1.16	31200	-0.15
475	HM813842A-HM813810	2.5000	5.0000	1.4375	1.4375	1.0625	0.03	0.13	3.03	2.99	4.37	4.76	1.16	31200	-0.15

1/ Part numbers are for reference only. Part numbers reflect the cup and cone numbers used by industry and the American Bearing Manufacturers Association (ABMA).
2/ These maximum fillet radii shall be cleared by the bearing corners.
3/ Minus value indicates load center inside cone backface.
* Column headings in the above table refer to bearing characteristics defined in figure 1.

TABLE I. Size codes and dimensions (continued).*

Size code	Part /1 number	d	D	T	B	C	R 2/	r 2/	d_b	d_a	D_b	D_a	K factor	Basic dynamic load ratings (lb.)	a 3/
		Bore	Outside diameter	Bearing width	Cone width	Cup width	Max. shaft fillet radius	Max. housing fillet radius	Recommended shoulder diameters						Effective load center
	Cone-cup								Shaft		Housing			Radial	
476	639-633	2.5000	5.1250	1.6250	1.6250	1.2500	0.14	0.13	3.19	2.91	4.57	4.88	1.61	37400	-0.44
477	6382-6320	2.5000	5.3447	2.1250	2.2050	1.7500	0.17	0.13	3.31	3.03	4.61	4.96	1.80	51000	-0.76
478	639-632	2.5000	5.3750	1.6250	1.6250	1.2500	0.14	0.13	3.19	2.91	4.65	4.92	1.61	37400	-0.44
479	H414235-H414210	2.5000	5.3750	1.6250	1.6250	1.2500	0.14	0.13	3.23	3.07	4.76	5.08	1.62	41800	-0.43
480	H715336-H715311	2.5000	5.3750	1.8125	1.8125	1.4375	0.14	0.13	3.43	3.15	4.65	5.20	1.24	43000	-0.33
481	6475-6420	2.5000	5.8750	2.1250	2.1350	1.7500	0.14	0.13	3.39	3.15	5.08	5.51	1.61	55100	-0.59
482	569-563	2.5576	5.0000	1.4375	1.4240	1.1250	0.14	0.13	3.19	2.91	4.41	4.72	1.61	29200	-0.32
483	6379-6320	2.5625	5.3447	2.1250	2.2050	1.7500	0.14	0.13	3.31	3.04	4.61	4.96	1.80	51000	-0.76
484	H715340-H715311	2.5625	5.3750	1.8125	1.8125	1.4375	0.14	0.13	3.46	3.23	4.65	5.20	1.24	43000	-0.33
485	L812148-L812111	2.6250	4.0635	0.6930	0.6930	0.4720	0.06	0.03	2.91	2.83	3.78	3.90	1.20	11500	-0.14
486	29590-29520	2.6250	4.2500	1.0000	1.0000	0.7500	0.14	0.13	3.15	2.87	3.78	4.06	1.27	14200	-0.03
487	3984-3921XA	2.6250	4.3301	1.1713	1.1830	0.9375	0.14	0.02	3.15	2.91	3.94	4.12	1.45	22400	-0.18
488	395A-394A	2.6250	4.3307	0.8661	0.8660	0.7411	0.03	0.05	2.87	2.87	3.98	4.11	1.45	16200	-0.03
489	395-S-394A	2.6250	4.3307	0.8661	0.8660	0.7411	0.14	0.05	3.11	2.87	3.98	4.11	1.45	16200	-0.03
490	3984-3920	2.6250	4.4375	1.1875	0.1830	0.9375	0.14	0.13	3.15	2.91	3.90	4.17	1.45	22400	-0.18
491	3984-3925	2.6250	4.4375	1.1875	0.1830	0.9375	0.14	0.03	3.15	2.91	3.98	4.17	1.45	22400	-0.18
492	3994-3920	2.6250	4.4375	1.1875	0.1830	0.9375	0.22	0.13	3.31	2.91	3.90	4.17	1.45	22400	-0.18
493	39590-39520	2.6250	4.4375	1.1875	1.1875	0.9375	0.14	0.13	3.15	2.91	3.98	4.21	1.72	27000	-0.26
494	39590-39521	2.6250	4.4375	1.1875	1.1875	0.9375	0.14	0.03	3.15	2.91	4.06	4.21	1.72	27000	-0.26

1/ Part numbers are for reference only. Part numbers reflect the cup and cone numbers used by industry and the American Bearing Manufacturers Association (ABMA).
2/ These maximum fillet radii shall be cleared by the bearing corners.
3/ Minus value indicates load center inside cone backface.
* Column headings in the above table refer to bearing characteristics defined in figure 1.

TABLE I. Size codes and dimensions (continued).*

Size code	Part /1 number	d	D	T	B	C	R 2/	r 2/	d_b	d_a	D_b	D_a	K factor	Basic dynamic load ratings (lb.)	a 3/
		Bore	Outside diameter	Bearing width	Cone width	Cup width	Max. shaft fillet radius	Max. housing fillet radius	Recommended shoulder diameters						Effective load center
	Cone-cup								Shaft		Housing			Radial	
495	39591-39520	2.6250	4.4375	1.1875	1.1875	0.9375	0.22	0.13	3.31	2.91	3.98	4.21	1.72	27000	-0.26
496	3984-3926	2.6250	4.4375	1.3125	1.1830	1.0625	0.14	0.13	3.15	2.91	3.86	4.17	1.45	22400	-0.18
497	33262-33462	2.6250	4.6250	1.1875	1.1875	0.9375	0.14	0.13	3.19	2.95	4.09	4.41	1.34	22300	-0.11
498	560-553X	2.6250	4.8125	1.5000	1.4440	1.1875	0.14	0.13	3.19	2.95	4.25	4.53	1.69	30700	-0.37
499	HM212049-HM212010	2.6250	4.8125	1.5000	1.5100	1.1700	0.14	0.06	3.23	2.97	4.33	4.57	1.73	36100	-0.43
500	HM212049-HM212011	2.6250	4.8125	1.5000	1.5100	1.1700	0.14	0.13	3.23	2.97	4.25	4.57	1.73	36100	-0.43
501	HM212049X-HM212011	2.6250	4.8125	1.5000	1.5100	1.1700	0.28	0.13	3.50	2.97	4.25	4.57	1.73	36100	-0.43
502	560-552A	2.6250	4.8750	1.5000	1.4440	1.1875	0.14	0.13	3.19	2.95	4.29	4.57	1.69	30700	-0.37
503	HM813844-HM813810	2.6250	5.0000	1.4375	1.4375	1.0625	0.14	0.13	3.35	3.07	4.37	4.76	1.16	31200	-0.15
504	HM813844-HM813811	2.6250	5.0000	1.4375	1.4375	1.0625	0.14	0.06	3.35	3.07	4.45	4.76	1.16	31200	-0.15
505	641-633	2.6250	5.1250	1.6250	1.6250	1.2500	0.14	0.13	3.27	3.03	4.57	4.88	1.61	37400	-0.44
506	6386-6320	2.6250	5.3447	2.1250	2.2050	1.7500	0.17	0.13	3.43	3.04	4.61	4.96	1.80	51000	-0.76
507	6389-6320	2.6320	5.3447	2.1250	2.2050	1.7500	0.25	0.13	3.58	3.04	4.61	4.96	1.80	51000	-0.76
508	641-632	2.6250	5.3750	1.6250	1.6250	1.2500	0.14	0.13	3.27	3.03	4.65	4.92	1.61	37400	-0.44
509	H414242-H414210	2.6250	5.3750	1.6250	1.6250	1.2500	0.14	0.13	3.35	3.19	4.76	5.08	1.62	41800	-0.43
510	H715341-H715311	2.6250	5.3750	1.8125	1.8125	1.4375	0.14	0.13	3.50	3.27	4.65	5.20	1.24	43000	-0.34
511	399A-394A	2.6875	4.3307	0.8661	0.8660	0.7411	0.09	0.05	3.07	2.91	3.98	4.11	1.45	16200	-0.03
512	399AS-394A	2.6875	4.3307	0.8661	0.8660	0.7411	0.20	0.05	3.27	2.91	3.98	4.11	1.45	16200	-0.03

1/ Part numbers are for reference only. Part numbers reflect the cup and cone numbers used by industry and the American Bearing Manufacturers Association (ABMA).
2/ These maximum fillet radii shall be cleared by the bearing corners.
3/ Minus value indicates load center inside cone backface.
* Column headings in the above table refer to bearing characteristics defined in figure 1.

TABLE I. Size codes and dimensions (continued).*

Size code	Part /1 number	d	D	T	B	C	R 2/	r 2/	d_b	d_a	D_b	D_a	K factor	Basic dynamic load ratings (lb.)	a 3/
		Bore	Outside diameter	Bearing width	Cone width	Cup width	Max. shaft fillet radius	Max. housing fillet radius	Recommended shoulder diameters						Effective load center
	Cone-cup								Shaft		Housing			Radial	
513	33269-33462	2.6875	4.6250	1.1875	1.1875	0.9375	0.14	0.13	3.23	2.99	4.09	4.41	1.34	22300	-0.11
514	480-472	2.6875	4.7244	1.1730	1.1420	0.9542	0.14	0.08	3.23	2.95	4.21	4.49	1.52	23100	-0.16
515	480-472A	2.6875	4.7244	1.1418	1.1420	0.9230	0.14	0.13	3.23	2.95	4.17	4.49	1.52	23100	-0.16
516	560-S-552A	2.6875	4.8750	1.5000	1.4440	1.1875	0.14	0.13	3.27	2.99	4.29	4.57	1.69	30700	-0.37
517	560-S-553X	2.6875	4.8125	1.5000	1.4440	1.1875	0.14	0.13	3.27	2.99	4.25	4.53	1.69	30700	-0.37
518	570-563	2.6875	5.0000	1.4375	1.4240	1.1250	0.14	0.13	3.27	3.03	4.41	4.72	1.69	30700	-0.32
519	H414245-H414210	2.6875	5.3750	1.6250	1.6250	1.2500	0.14	0.13	3.39	3.23	4.76	5.08	1.62	41800	-0.43
520	H715343-H715311	2.6875	5.3750	1.8125	1.8125	1.4375	0.14	0.13	3.54	3.31	4.65	5.20	1.24	43000	-0.34
521	H715343-H715310	2.6875	5.5000	1.8125	1.8125	1.4375	0.14	0.13	3.54	3.31	4.72	5.24	1.24	43000	-0.33
522	LL713149-LL713110	2.7500	3.9062	0.6693	0.6299	0.6118	0.06	0.06	3.03	2.95	3.68	3.74	1.26	8000	0.18
523	L713049-L713010	2.7500	4.0000	0.7500	0.7500	0.5038	0.06	0.06	3.07	2.95	3.68	2.86	1.27	10900	0.10
524	LM613449-LM613410	2.7500	4.4375	0.8750	0.8660	0.6250	0.06	0.03	3.07	2.99	4.09	4.21	1.40	16400	0.00
525	29675-29620	2.7500	4.4375	1.0000	1.0000	0.7500	0.06	0.13	3.15	3.03	3.98	4.29	1.20	18000	0.04
526	33275-33452	2.7500	4.6250	1.1875	0.1875	0.9375	0.14	0.13	3.31	3.03	4.09	4.41	1.34	22300	-0.11
527	482-472A	2.7500	4.7244	1.1418	1.1420	0.9230	0.14	0.13	3.27	3.03	4.17	4.49	1.52	23100	-0.16
528	482-472	2.7500	4.7244	1.1730	1.1420	0.9542	0.14	0.08	3.27	3.03	4.21	4.49	1.52	23100	-0.16
529	47487-47420	2.7500	4.7244	1.2813	1.2813	1.0313	0.14	0.13	3.31	3.07	4.21	4.49	1.62	28800	-0.25
530	47487-47420A	2.7500	4.7244	1.2813	1.2813	1.0313	0.14	0.02	3.31	3.07	4.29	4.49	1.62	28800	-0.25
531	29675-29630	2.7500	4.7500	1.0000	1.0000	0.7500	0.06	0.13	3.15	3.03	4.09	4.45	1.20	18000	0.04

1/ Part numbers are for reference only. Part numbers reflect the cup and cone numbers used by industry and the American Bearing Manufacturers Association (ABMA).
2/ These maximum fillet radii shall be cleared by the bearing corners.
3/ Minus value indicates load center inside cone backface.
* Column headings in the above table refer to bearing characteristics defined in figure 1.

TABLE I. Size codes and dimensions (continued).*

Size code	Part /1 number	d	D	T	B	C	R 2/	r 2/	d_b	d_a	D_b	D_a	K factor	Basic dynamic load ratings (lb.)	a 3/
		Bore	Outside diameter	Bearing width	Cone width	Cup width	Max. shaft fillet radius	Max. housing fillet radius	Recommended shoulder diameters						Effective load center
	Cone-cup								Shaft		Housing			Radial	
532	566-563	2.7500	5.0000	1.4375	1.4240	1.1250	0.14	0.13	3.35	3.07	4.41	4.72	1.69	30700	-0.32
533	HM813846-HM813811	2.7500	5.0000	1.4275	1.4375	1.0625	0.14	0.06	3.46	3.19	4.45	4.76	1.16	31200	-0.15
534	643-633	2.7500	5.1250	1.6250	1.6250	1.2500	0.14	0.13	3.39	3.15	4.57	4.88	1.61	37400	-0.44
535	643-632	2.7500	5.3750	1.6250	1.6250	1.2500	0.14	0.13	3.39	3.15	4.65	4.92	1.61	37400	-0.44
536	655-653	2.7500	5.7500	1.6250	1.6250	1.2500	0.14	0.13	3.46	3.23	5.16	5.47	1.43	39600	-0.31
537	6454-6420	2.7500	5.8750	2.1250	2.1350	1.7500	0.20	0.13	3.70	3.35	5.08	5.51	1.61	55100	-0.59
538	745A-742	2.7500	5.9090	1.7500	1.8375	1.4375	0.14	0.13	3.46	3.23	5.28	5.59	1.80	50800	-0.47
539	835-832	2.7500	6.6260	2.1250	2.2190	1.6250	0.14	0.13	3.58	3.31	5.87	6.10	1.95	65100	-0.73
540	34274-3478	2.7540	4.7812	0.9688	0.9060	0.6875	0.08	0.08	3.19	3.07	4.33	4.57	1.30	16600	0.06
541	33281-33462	2.8125	4.6250	1.1875	1.1875	0.9375	0.14	0.13	3.35	3.11	4.09	4.41	1.34	22300	-0.11
542	47490-47420	2.8125	4.7244	1.2813	1.2813	1.0313	0.14	0.13	3.39	3.11	4.21	4.49	1.62	28800	-0.25
543	567A-563	2.8125	5.0000	1.4375	1.4240	1.1250	0.14	0.13	3.39	3.15	4.41	4.72	1.69	30700	-0.32
544	HM813849-HM813810	2.8125	5.0000	1.4375	1.4375	1.0625	0.14	0.13	3.50	3.22	4.37	4.76	1.16	31200	-0.15
545	495-S-493	2.8125	5.3750	1.1875	1.1720	0.8750	0.14	0.13	3.46	3.23	4.80	5.12	1.31	25000	-0.03
546	644-632	2.8125	5.3750	1.6250	1.6250	1.2500	0.14	0.13	3.43	3.19	4.65	4.92	1.61	37400	-0.44
547	H414249-H414210	2.8125	5.3750	1.6250	1.6250	1.2500	0.14	0.13	3.50	3.28	4.76	5.08	1.62	41800	-0.43
548	H715345-H715311	2.8125	5.3750	1.8125	1.8125	1.4375	0.14	0.13	3.66	3.43	4.65	5.20	1.24	43000	-0.34
549	H715345-H715310	2.8125	5.5000	1.8125	1.8125	1.4375	0.14	0.13	3.66	3.43	4.72	5.24	1.24	43000	-0.33
550	29685-29620	2.8750	4.4375	1.0000	1.0000	0.7500	0.14	0.13	3.39	3.15	3.98	4.29	1.20	18000	0.04

1/ Part numbers are for reference only. Part numbers reflect the cup and cone numbers used by industry and the American Bearing Manufacturers Association (ABMA).
2/ These maximum fillet radii shall be cleared by the bearing corners.
3/ Minus value indicates load center inside cone backface.
* Column headings in the above table refer to bearing characteristics defined in figure 1.

TABLE I. Size codes and dimensions (continued).*

Size code	Part /1 number	d	D	T	B	C	R 2/	r 2/	d_b	d_a	D_b	D_a	K factor	Basic dynamic load ratings (lb.)	a 3/
		Bore	Outside diameter	Bearing width	Cone width	Cup width	Max. shaft fillet radius	Max. housing fillet radius	Recommended shoulder diameters						Effective load center
	Cone-cup								Shaft		Housing			Radial	
551	33287-33462	2.8750	4.6250	1.1875	1.1875	0.9375	0.14	0.13	3.43	3.15	4.09	4.49	1.34	22300	-0.11
552	33287-33472	2.8750	4.7244	1.1730	1.1875	0.9230	0.14	0.03	3.43	3.15	4.21	4.45	1.34	22300	-0.11
553	27680-27620	2.8750	4.9375	1.0000	1.0000	0.7813	0.14	0.06	3.46	3.23	4.53	4.72	1.40	19000	0.02
554	567-563	2.8750	5.0000	1.4375	1.4240	1.1250	0.14	0.13	3.46	3.19	5.50	4.72	1.69	30700	-0.32
555	576-572	2.8750	5.5115	1.4375	1.4212	1.1250	0.14	0.13	3.54	3.27	4.92	5.24	1.45	29800	-0.21
556	657-653	2.8750	5.7500	1.6250	1.6250	1.2500	0.14	0.13	3.58	3.35	5.16	5.47	1.43	39600	-0.31
557	6460-6420	2.8750	5.8750	2.1250	2.1350	1.7500	0.14	0.13	3.66	3.43	5.08	5.51	1.61	55100	-0.59
558	744-742	2.8750	5.9090	1.7500	1.8375	1.4375	0.14	0.13	3.58	3.35	5.28	5.59	1.80	50800	-0.47
559	762-752	2.8750	6.3750	1.8750	1.9000	1.5000	0.14	0.13	3.62	3.82	5.67	5.91	1.71	52300	-0.47
560	577-572	2.9375	5.5115	1.4375	1.4212	1.1250	0.14	1.50	3.58	3.35	4.92	5.24	1.45	29800	-0.21
561	LL714649-LL714610	3.0000	4.1563	0.5313	0.5313	0.3750	0.06	0.06	3.27	3.19	3.90	4.02	1.24	6800	0.26
562	L814749-L814710	3.0000	4.3125	0.7500	0.7500	0.5938	0.06	0.06	3.31	3.23	3.94	4.13	1.16	11300	0.20
563	34300-34478	3.0000	4.7812	0.9688	0.9060	0.6875	0.08	0.08	3.39	3.27	4.33	4.57	1.30	16600	0.06
564	34301-34478	3.0000	4.7812	0.9688	0.9060	0.6875	0.14	0.08	3.50	3.27	4.33	4.57	1.30	16600	0.06
565	27684-27620	3.0000	4.9375	1.0000	1.0000	0.7813	0.14	0.06	3.58	3.31	4.53	4.72	1.40	19000	0.02
566	42687-42620	3.0000	5.0000	1.1875	1.2205	0.8750	0.14	0.13	3.54	3.31	4.49	4.76	1.39	26100	-0.11
567	42688-42620	3.0000	5.0000	1.1875	1.2205	0.8750	0.25	0.13	3.78	3.31	4.49	4.76	1.39	26100	-0.11
568	47678-47620	3.0000	5.2500	1.3125	1.3125	1.0313	0.25	0.13	3.82	3.35	4.69	5.04	1.44	29100	-0.17
569	47679-47620	3.0000	5.2500	1.3125	1.3125	1.0313	0.14	0.13	3.58	3.35	4.69	5.04	1.44	29100	-0.17
570	47680-47620	3.0000	5.2500	1.3125	1.3125	1.0313	0.03	0.13	3.39	3.35	4.69	5.04	1.44	29100	-0.17

1/ Part numbers are for reference only. Part numbers reflect the cup and cone numbers used by industry and the American Bearing Manufacturers Association (ABMA).
2/ These maximum fillet radii shall be cleared by the bearing corners.
3/ Minus value indicates load center inside cone backface.
* Column headings in the above table refer to bearing characteristics defined in figure 1.

TABLE I. Size codes and dimensions (continued).*

Size code	Part /1 number	d	D	T	B	C	R 2/	r 2/	d_b	d_a	D_b	D_a	K factor	Basic dynamic load ratings (lb.)	a 3/
		Bore	Outside diameter	Bearing width	Cone width	Cup width	Max. shaft fillet radius	Max. housing fillet radius	Recommended shoulder diameters						Effective load center
	Cone-cup								Shaft		Housing			Radial	
571	HM516442-HM516410	3.0000	5.2500	1.5625	1.5625	1.2813	0.14	0.13	3.66	3.43	4.65	5.04	1.45	35000	-0.29
572	5760-5735	3.0000	5.3438	1.7500	1.8150	1.3750	0.14	0.13	3.70	3.46	4.69	5.12	1.44	40800	-0.46
573	495A-493	3.0000	5.3750	1.1875	1.1720	0.8750	0.14	0.13	3.62	3.39	4.80	5.12	1.31	25000	-0.03
574	495AX-493	3.0000	5.3750	1.1875	1.1720	0.8750	0.25	0.13	3.86	3.39	4.80	5.12	1.31	25000	-0.03
575	575-572	3.0000	5.5115	1.4375	1.4212	1.1250	0.14	0.13	3.62	3.39	4.92	5.24	1.45	29800	-0.21
576	575-S-572	3.0000	5.5115	1.4375	1.4212	1.1250	0.27	0.13	3.90	3.39	4.92	5.24	1.45	29899	-0.21
577	659-653	3.0000	5.7500	1.6250	1.6250	1.2500	0.14	0.13	3.66	3.43	5.16	5.47	1.43	39600	-0.31
578	6461-6420	3.0000	5.8750	2.1250	2.1350	1.7500	0.14	0.13	3.78	3.52	5.08	5.51	1.61	55100	-0.59
579	6461A-6420	3.0000	5.8750	2.1250	2.1350	1.7500	0.38	0.13	4.25	3.52	5.08	5.51	1.61	55100	-0.59
580	748-S-742	3.0000	5.9090	1.7500	1.8375	1.4375	0.14	0.13	3.66	3.43	5.28	5.59	1.80	50800	-0.47
581	590A-592A	3.0000	6.0000	1.5625	1.4300	1.1875	0.14	0.13	3.74	3.50	5.31	5.67	1.32	34800	-0.10
582	659-652	3.0000	6.0000	1.6250	1.6250	1.2500	0.14	0.13	3.66	3.43	5.28	5.55	1.71	52300	-0.31
583	755-752	3.0000	6.3750	1.8750	1.9000	1.5000	0.14	0.13	3.74	3.46	5.67	5.91	1.71	52300	-0.47
584	6575-6535	3.0000	6.3750	2.1250	2.1693	1.6875	0.25	0.13	4.09	3.62	5.55	6.06	1.46	51900	-0.52
585	6576C-6535	3.0000	6.3750	2.1250	2.1693	1.6875	0.14	0.13	3.90	3.62	5.55	6.06	1.46	51900	-0.52
586	6576-6535	3.0000	6.3750	2.1250	2.1693	1.6875	0.14	0.13	3.90	3.62	5.55	6.06	1.46	51900	-0.52
587	843-832	3.0000	6.6250	2.1250	2.2190	1.6250	0.25	0.13	3.98	3.50	5.87	6.10	1.95	65100	-0.73
588	HH221430-HH221410	3.0000	7.5000	2.2500	2.2650	1.8125	0.14	0.13	3.98	3.74	6.73	7.05	1.74	85200	-0.59
589	LM814849-LM814810	3.0625	4.6250	1.0000	1.0000	0.7500	0.14	0.13	3.58	3.35	4.13	4.45	1.15	19200	0.09
590	34306-34478	3.0625	4.7812	0.9688	0.9060	0.6875	0.14	0.08	3.54	3.31	4.33	4.57	1.30	16600	0.06

1/ Part numbers are for reference only. Part numbers reflect the cup and cone numbers used by industry and the American Bearing Manufacturers Association (ABMA).
2/ These maximum fillet radii shall be cleared by the bearing corners.
3/ Minus value indicates load center inside cone backface.
* Column headings in the above table refer to bearing characteristics defined in figure 1.

TABLE I. Size codes and dimensions (continued).*

Size code	Part /1 number	d	D	T	B	C	R 2/	r 2/	d_b	d_a	D_b	D_a	K factor	Basic dynamic load ratings (lb.)	a 3/
		Bore	Outside diameter	Bearing width	Cone width	Cup width	Max. shaft fillet radius	Max. housing fillet radius	Recommended shoulder diameters						Effective load center
	Cone-cup								Shaft		Housing			Radial	
591	34307-34478	3.0625	4.7812	0.9688	0.9060	0.6875	0.25	0.08	3.78	3.31	4.33	4.57	1.30	16600	0.06
592	42690-42620	3.0625	5.0000	1.1875	1.2205	0.8750	0.14	0.13	3.58	3.35	4.49	4.76	1.39	26100	-0.11
593	5795-5735	3.0625	5.3438	1.7500	1.8150	1.3750	0.14	0.13	3.78	3.50	4.69	5.12	1.44	40800	-0.46
594	495AS-493	3.0625	5.3750	1.1875	1.1720	0.8750	0.14	0.13	3.66	3.43	4.80	5.12	1.31	25000	-0.03
595	H715348-H715311	3.0625	5.3750	1.1875	1.8125	1.4375	0.14	0.13	3.86	3.48	4.65	5.20	1.24	43000	-0.34
596	H816249-H816210	3.0625	6.4951	1.9488	1.8208	1.4272	0.14	0.13	4.02	3.64	5.67	6.08	1.14	56200	-0.25
597	661-653	3.1250	5.7500	1.6250	1.6250	1.2500	0.14	0.13	3.78	3.54	5.16	5.47	1.43	39600	-0.31
598	750-742	3.1250	5.9090	1.7500	1.8375	1.4375	0.14	0.13	3.78	3.54	5.28	5.59	1.80	50800	-0.47
599	756A-752	3.1250	6.3750	1.8750	1.9000	1.5000	0.31	0.13	4.17	3.58	5.67	5.91	1.71	52300	-0.47
600	HH221431-HH221410	3.1250	7.5000	2.2500	2.2650	1.8125	0.14	0.13	4.06	3.82	6.73	7.05	1.74	85200	-0.59
601	47681-47620	3.1875	5.2500	1.3125	1.3125	1.0313	0.14	0.13	3.74	3.50	4.69	5.04	1.44	29100	-0.17
602	496-493	3.1875	5.3750	1.1875	1.1720	0.8750	0.14	0.13	3.74	3.50	4.80	5.12	1.31	25000	-0.03
603	581-572	3.1875	5.5115	1.4375	1.4212	1.1250	0.14	0.13	3.78	3.54	4.92	5.24	1.45	29800	-0.21
604	740-742	3.1875	5.9090	1.7500	1.8375	1.4375	0.20	0.13	3.98	3.58	5.28	5.59	1.80	50800	-0.47
605	L116149-L116110	3.2500	4.5625	0.8125	0.8438	0.6563	0.06	0.06	3.54	3.46	4.25	4.37	1.90	9200	-0.05
606	27687-27620	3.2500	4.9375	1.0000	1.0000	0.7813	0.14	0.06	3.78	3.50	4.53	4.72	1.40	19000	0.02
607	495-492A	3.2500	5.2500	1.1875	1.1720	0.8750	0.14	0.13	3.82	3.54	4.72	5.04	1.31	22400	-0.03
608	47686-47620	3.2500	5.2500	1.3125	1.3125	1.0313	0.14	0.13	3.82	3.54	4.69	5.04	1.44	29100	-0.17
609	47686-47620A	3.2500	5.2500	1.3125	1.3125	1.0313	0.14	0.03	3.82	3.54	4.76	5.04	1.44	29100	-0.17

1/ Part numbers are for reference only. Part numbers reflect the cup and cone numbers used by industry and the American Bearing Manufacturers Association (ABMA).
2/ These maximum fillet radii shall be cleared by the bearing corners.
3/ Minus value indicates load center inside cone backface.
* Column headings in the above table refer to bearing characteristics defined in figure 1.

TABLE I. Size codes and dimensions (continued).*

Size code	Part /1 number	d	D	T	B	C	R 2/	r 2/	d_b	d_a	D_b	D_a	K factor	Basic dynamic load ratings (lb.)	a 3/
		Bore	Outside diameter	Bearing width	Cone width	Cup width	Max. shaft fillet radius	Max. housing fillet radius	Recommended shoulder diameters						Effective load center
	Cone-cup								Shaft		Housing			Radial	
610	47687-47620	3.2500	5.2500	1.3125	1.3125	1.0313	0.27	0.13	4.06	3.54	4.69	5.04	1.44	29100	-0.17
611	HM516448-HM516410	3.2500	5.2500	1.5625	1.5625	1.2813	0.27	0.13	4.13	3.62	4.65	5.04	1.45	35000	-029
612	HM516449C-HM516410	3.2500	5.2500	1.5625	1.5625	1.2813	0.14	0.13	3.90	3.62	4.65	5.04	1.45	35000	-0.29
613	495-493	3.2500	5.3750	1.1875	1.1720	0.8750	0.14	0.13	3.82	3.54	4.80	5.12	1.31	25000	-0.03
614	580-572	3.2500	5.5115	1.4375	1.4212	1.1250	0.14	0.13	3.86	3.58	4.92	5.24	1.45	29800	-0.21
615	582-572	3.2500	5.5115	1.4375	1.4212	1.1250	0.27	0.13	4.09	3.58	4.92	5.24	1.45	29800	-0.21
616	663-653	3.2500	5.7500	1.6250	1.6250	1.2500	0.14	0.13	3.90	3.62	5.16	5.47	1.43	39600	-0.31
617	749A-742	3.2500	5.9090	1.7500	1.8375	1.4375	0.14	0.13	3.90	3.66	5.28	5.59	1.80	50800	-0.47
618	750A-742	3.2500	5.9090	1.7500	1.8375	1.4375	0.27	0.13	4.17	3.66	5.28	5.59	1.80	50800	-0.47
619	595-592A	3.2500	6.0000	1.5625	1.4300	1.1875	0.14	0.13	3.94	3.66	5.31	5.67	1.32	34800	-0.10
620	663-652	3.2500	6.0000	1.6250	1.6250	1.2500	0.14	0.13	3.90	3.62	5.28	5.55	1.43	39600	-0.31
621	757-752	3.2500	6.3750	1.8750	1.9000	1.5000	0.14	0.13	3.94	3.70	5.67	5.91	1.71	52300	-0.47
622	6559C-6535	3.2500	6.3750	2.1250	2.1693	1.6875	0.14	0.13	4.09	3.86	5.55	6.06	1.46	51900	-0.52
623	842-832	3.2500	6.6250	2.1250	2.2190	1.6250	0.14	0.13	3.98	3.70	5.87	6.10	1.95	65100	-0.73
624	27690-27620	3.2813	4.9375	1.0000	1.0000	0.7813	0.14	0.06	3.78	3.54	4.53	4.72	1.40	19000	0.02
625	498-493	3.3125	5.3750	1.1875	1.1720	0.8750	0.14	0.13	3.86	3.58	4.80	5.12	1.31	25000	-0.03
626	749-742	3.3475	5.9090	1.7500	1.8375	1.4375	0.14	0.13	3.98	3.74	5.28	5.59	1.80	50800	-0.47
627	497-492A	3.3750	5.2500	1.1875	1.1720	0.8750	0.14	0.13	3.90	3.66	4.72	5.04	1.31	25000	-0.03
628	497-493	3.3750	5.3750	1.1875	1.1720	0.8750	0.14	0.13	3.90	3.66	4.80	5.12	1.31	25000	-0.03
629	497A-493	3.3750	5.3750	1.1875	1.1720	0.8750	0.25	0.13	4.13	3.66	4.80	5.12	1.31	25000	-0.03

1/ Part numbers are for reference only. Part numbers reflect the cup and cone numbers used by industry and the American Bearing Manufacturers Association (ABMA).
2/ These maximum fillet radii shall be cleared by the bearing corners.
3/ Minus value indicates load center inside cone backface.
* Column headings in the above table refer to bearing characteristics defined in figure 1.

TABLE I. Size codes and dimensions (continued).*

Size code	Part /1 number	d	D	T	B	C	R 2/	r 2/	d_b	d_a	D_b	D_a	K factor	Basic dynamic load ratings (lb.)	a 3/
		Bore	Outside diameter	Bearing width	Cone width	Cup width	Max. shaft fillet radius	Max. housing fillet radius	Recommended shoulder diameters						Effective load center
	Cone-cup								Shaft		Housing			Radial	
630	HM617049-HM617010	3.3750	5.5960	1.6875	1.6875	1.3438	0.19	0.12	4.17	3.75	4.92	5.39	1.35	41800	-0.13
631	665-653	3.3750	5.7500	1.6250	1.6250	1.2500	0.14	0.13	4.02	3.74	5.16	5.47	1.43	39600	-0.31
632	665A-653	3.3750	5.7500	1.6250	1.6250	1.2500	0.25	0.13	4.21	3.74	5.16	5.47	1.43	39600	-0.31
633	596-592A	3.3750	6.0000	1.5625	1.4300	1.1875	0.14	0.13	4.02	3.78	5.31	5.67	1.32	34800	-0.10
634	758-752	3.3750	6.3750	1.8750	1.9000	1.5000	0.14	0.13	4.06	3.82	5.67	5.91	1.71	52300	-0.47
635	677-672	3.3750	6.6250	1.6250	1.6250	1.1875	0.14	0.13	4.13	3.90	5.87	6.30	1.24	39800	-0.11
636	841-832	3.3750	6.6250	2.1250	2.2190	1.6250	0.14	0.13	4.09	3.82	5.87	6.10	1.95	65100	-0.73
637	42346-42584	3.4630	5.8437	1.1250	1.1406	0.8438	0.12	0.12	4.06	3.86	5.28	5.59	1.19	26400	0.12
638	LL217849-LL217810	3.5000	4.7812	0.5938	0.5938	0.4375	0.06	0.06	3.82	3.70	4.53	4.61	1.77	9800	0.12
639	L217849-L217810	3.5000	4.8750	0.8125	0.8125	0.6563	0.06	0.06	3.82	3.70	4.57	4.69	1.77	9800	0.12
640	42350-42584	3.5000	5.8437	1.1250	1.1406	0.8438	0.12	0.12	4.09	3.86	5.28	5.59	1.19	26400	0.12
641	42350-42587	3.5000	5.8750	1.2500	1.1406	0.9688	0.12	0.13	4.09	3.86	5.28	5.63	1.19	26400	0.12
642	593-592A	3.5000	6.0000	1.5625	1.4300	1.1875	0.14	0.13	4.09	3.88	5.31	5.67	1.32	34800	-0.10
643	593A-592A	3.5000	6.0000	1.5625	1.4300	1.1875	0.25	0.13	4.33	3.86	5.31	5.67	1.32	34800	-0.10
644	759-752	3.5000	6.3750	1.8750	1.9000	1.5000	0.14	0.13	4.17	3.90	5.67	5.91	1.71	52300	-0.47
645	766-752	3.5000	6.3750	1.8750	1.9000	1.5000	0.28	0.13	4.45	3.90	5.67	5.91	1.71	52300	-0.47
646	6580-6535	3.5000	6.3750	2.1250	2.1693	1.6875	0.14	0.13	4.29	4.01	5.55	6.06	1.46	51900	0.52
647	679-672	3.5000	6.6250	1.6250	1.6250	1.1875	0.14	0.13	4.21	3.98	5.87	6.30	1.24	39800	-0.11
648	850-832	3.5000	6.6250	2.1250	2.2190	1.6250	0.14	0.13	4.17	3.94	5.87	6.10	1.95	65100	-0.73
649	77350-77675	3.5000	6.7500	1.8750	1.9000	1.5000	0.20	0.13	4.33	3.98	6.02	6.34	1.59	54300	-0.38

1/ Part numbers are for reference only. Part numbers reflect the cup and cone numbers used by industry and the American Bearing Manufacturers Association (ABMA).
2/ These maximum fillet radii shall be cleared by the bearing corners.
3/ Minus value indicates load center inside cone backface.
* Column headings in the above table refer to bearing characteristics defined in figure 1.

TABLE I. Size codes and dimensions (continued).*

Size code	Part /1 number	d	D	T	B	C	R 2/	r 2/	d_b	d_a	D_b	D_a	K factor	Basic dynamic load ratings (lb.)	a 3/
		Bore	Outside diameter	Bearing width	Cone width	Cup width	Max. shaft fillet radius	Max. housing fillet radius	Recommended shoulder diameters						Effective load center
	Cone-cup								Shaft		Housing			Radial	
650	855-854	3.5000	7.5000	2.2500	2.2650	1.7500	0.31	0.13	4.65	4.06	6.69	6.85	1.74	73200	-0.60
651	HH221434-HH221410	3.5000	7.5000	2.2500	2.2650	1.8125	0.31	0.13	4.72	4.13	6.73	7.05	1.74	85200	-0.59
652	HM218248-HM218210	3.5433	5.7874	1.5748	1.5748	1.2795	0.28	0.14	4.41	3.90	5.24	5.55	1.76	43900	-0.34
653	760-752	3.5625	6.3750	1.8750	1.9000	1.5000	0.14	0.13	4.21	3.98	5.67	5.91	1.71	52300	-0.47
654	47890-47820	3.6250	5.7500	1.3125	1.3750	1.0313	0.14	0.13	4.21	3.98	5.16	5.51	1.30	31800	-0.04
655	598-592A	3.6250	6.0000	1.5625	1.4300	1.1875	0.14	0.13	4.21	3.98	5.31	5.67	1.32	34800	-0.10
656	598A-592A	3.6250	6.0000	1.5625	1.4300	1.1875	0.25	0.13	4.45	3.98	5.31	5.67	1.32	34800	0.10
657	681-672	3.6250	6.6250	1.6250	1.6250	1.1875	0.14	0.13	4.33	4.09	5.87	6.30	1.24	39800	-0.11
658	681A-672	3.6250	6.6250	1.6250	1.6250	1.1875	0.25	0.13	4.57	4.09	5.87	6.30	1.24	39800	-0.11
659	77362-77675	3.6250	6.7500	1.8750	1.9000	1.5000	0.14	0.13	4.29	4.06	6.02	6.34	1.59	54300	-0.38
660	778-772	3.6250	7.1250	1.8750	1.8900	1.5000	0.14	0.13	4.37	4.13	6.34	6.61	1.51	51400	-0.32
661	857-854	3.6250	7.5000	2.2500	2.2650	1.7500	0.31	0.13	4.76	4.17	6.69	6.85	1.74	73200	-0.60
662	42368-42584	3.6875	5.8437	1.1250	1.1406	0.8438	0.12	0.12	4.21	4.02	5.28	5.59	1.19	26400	0.12
663	LL319349-LL319310	3.7500	5.0625	0.6250	0.5938	0.4688	0.06	0.06	4.06	3.94	4.80	4.88	1.66	6400	0.17
664	L319249-L319210	3.7500	5.1250	0.8125	0.8438	0.6563	0.06	0.06	4.06	3.98	4.80	4.92	1.67	15600	0.05
665	47896-47820	3.7500	5.7500	1.3125	1.3750	1.0313	0.14	0.13	4.33	4.06	5.16	5.51	1.30	31800	-0.04
666	594A-592XE	3.7500	5.8125	1.4062	1.4300	1.0312	0.14	0.03	4.33	4.09	5.31	5.59	1.32	34800	-0.10
667	594A-592XS	3.7500	5.8125	1.4062	1.4300	1.0312	0.20	0.13	4.45	4.09	5.24	5.59	1.32	34800	-0.10
668	42375-42584	3.7500	5.8437	1.1250	1.1406	0.8438	0.12	0.12	4.25	4.06	5.28	5.59	1.19	26400	0.12

1/ Part numbers are for reference only. Part numbers reflect the cup and cone numbers used by industry and the American Bearing Manufacturers Association (ABMA).
2/ These maximum fillet radii shall be cleared by the bearing corners.
3/ Minus value indicates load center inside cone backface.
* Column headings in the above table refer to bearing characteristics defined in figure 1.

TABLE I. Size codes and dimensions (continued).*

Size code	Part /1 number	d	D	T	B	C	R 2/	r 2/	d_b	d_a	D_b	D_a	K factor	Basic dynamic load ratings (lb.)	a 3/
		Bore	Outside diameter	Bearing width	Cone width	Cup width	Max. shaft fillet radius	Max. housing fillet radius	Recommended shoulder diameters						Effective load center
	Cone-cup								Shaft		Housing			Radial	
669	594-592A	3.7500	6.0000	1.5625	1.4300	1.1875	0.14	0.13	4.33	4.09	5.31	5.67	1.32	34800	-0.10
670	594A-592A	3.7500	6.0000	1.5625	1.4300	1.1875	0.20	0.13	4.45	4.09	5.31	5.67	1.32	34800	-0.10
671	52375-52618	3.7500	6.1875	1.4375	1.4219	1.0313	0.14	0.13	4.41	4.13	5.59	5.98	1.23	36100	-0.01
672	683-672	3.7500	6.6250	1.6250	1.6250	1.1875	0.14	0.13	4.45	4.17	5.87	6.30	1.24	39800	-0.11
673	683XA-672	3.7500	6.6250	1.6250	1.6250	1.1875	0.20	0.13	4.57	4.17	5.87	6.30	1.24	39800	-0.11
674	77375-77675	3.7500	6.7500	1.8750	1.9000	1.5000	0.14	0.13	4.45	4.17	6.02	6.34	1.59	54300	-0.38
675	776-772	3.7500	7.1250	1.8750	1.8900	1.5000	0.14	0.13	4.49	4.21	6.34	6.61	1.51	51400	-0.32
676	864-854	3.7500	7.5000	2.2500	2.2650	1.7500	0.31	0.13	4.84	4.25	6.69	6.85	1.74	73200	-0.60
677	HH221440-HH221410	3.7500	7.5000	2.2500	2.2650	1.8125	0.31	0.13	4.92	4.33	6.73	7.05	1.74	85200	-0.59
678	HH221440-75 HH221416	3.7500	7.8750	2.4375	2.2650	2.0000	0.31	0.13	4.92	4.33	6.87	7.05	1.74	85200	-0.59
679	42381-42594	3.8125	5.8437	1.1250	1.1406	0.8438	0.14	0.12	4.33	4.09	5.28	5.59	1.19	26400	0.12
680	52387-52618	3.8750	6.1875	1.4375	1.4219	1.0313	0.14	0.13	4.49	4.25	5.59	5.98	1.23	36100	-0.01
681	685-672	3.8750	6.6250	1.6250	1.6250	1.1875	0.14	0.13	4.57	4.29	5.87	6.30	1.24	39800	-0.11
682	779-772	3.8750	7.1250	1.8750	1.8900	1.5000	0.14	0.13	4.57	4.33	6.34	6.61	1.51	51400	-0.32
683	HH421246C-HH421210	3.8750	7.2500	2.5000	2.5000	2.0625	0.25	0.13	5.00	4.63	6.42	6.93	1.56	84200	-0.66
684	866-854	3.8750	7.5000	2.2500	2.2650	1.7500	0.14	0.13	4.65	4.37	6.69	6.85	1.74	73200	-0.60
685	HH221442-HH221410	3.8750	7.5000	2.2500	2.2650	1.8125	0.14	0.13	4.69	4.45	6.73	7.05	1.74	85200	-0.59
686	783-772	3.9370	7.1250	1.8750	1.8900	1.5000	0.14	0.13	4.65	4.37	6.34	6.61	1.51	51400	-0.32
687	52393-52618	3.9375	6.1875	1.4375	1.4219	1.0313	0.14	0.13	4.57	4.29	5.59	5.98	1.23	36100	-0.01

1/ Part numbers are for reference only. Part numbers reflect the cup and cone numbers used by industry and the American Bearing Manufacturers Association (ABMA).
2/ These maximum fillet radii shall be cleared by the bearing corners.
3/ Minus value indicates load center inside cone backface.
* Column headings in the above table refer to bearing characteristics defined in figure 1.

TABLE I. Size codes and dimensions (continued).*

Size code	Part /1 number	d	D	T	B	C	R 2/	r 2/	d_b	d_a	D_b	D_a	K factor	Basic dynamic load ratings (lb.)	a 3/
		Bore	Outside diameter	Bearing width	Cone width	Cup width	Max. shaft fillet radius	Max. housing fillet radius	Recommended shoulder diameters						Effective load center
	Cone-cup								Shaft		Housing			Radial	
688	LL420549-LL420510	4.0000	5.3125	0.6250	0.5938	0.4688	0.06	0.06	4.29	4.21	5.04	5.12	1.58	10700	0.22
689	L420449-L420410	4.0000	5.3750	0.8438	0.8438	0.6563	0.06	0.06	4.29	4.21	5.04	5.20	1.59	16000	0.11
690	L521945-L521910	4.0000	5.7500	0.8438	0.8438	0.6563	0.06	0.06	4.41	4.29	5.35	5.55	1.49	15700	0.19
691	52400-52618	4.0000	6.1875	1.4375	1.4219	1.0313	0.14	0.13	4.61	4.37	5.59	5.98	1.23	36100	-0.01
692	52400-52637	4.0000	6.3750	1.4375	1.4219	1.0313	0.14	0.13	4.61	4.37	5.67	6.06	1.23	36100	-0.01
693	52400-52638	4.0000	6.3750	1.5625	1.4219	1.1563	0.14	0.13	4.61	4.37	5.63	6.06	1.23	36100	-0.01
694	687-672	4.0000	6.6250	1.6250	1.6250	1.1875	0.14	0.13	4.65	4.41	5.87	6.30	1.24	39800	-0.11
695	780-772	4.0000	7.1250	1.8750	1.8900	1.5000	0.14	0.13	4.69	4.45	6.34	6.61	1.51	51400	-0.32
696	861-854	4.0000	7.5000	2.2500	2.2650	1.7500	0.31	0.13	5.08	4.49	6.69	6.85	1.74	73200	-0.60
697	HH221449-HH221410	4.0000	7.5000	2.2500	2.2650	1.8125	0.14	0.13	4.80	4.56	6.73	7.05	1.74	85200	-0.59
698	HH221449A-HH221410	4.0000	7.5000	2.2500	2.2650	1.8125	0.14	0.13	4.80	4.56	6.73	7.05	1.74	85200	-0.59
699	HH221449-HH221416	4.0000	7.8750	2.4375	2.2650	2.0000	0.31	0.13	5.16	4.56	6.87	7.05	1.74	85200	-0.59
700	941-932	4.0000	8.3750	2.6250	2.6250	2.1250	0.28	0.13	5.12	4.61	7.36	7.60	1.79	83300	-0.78
701	HH224335-HH224310	4.0000	8.3750	2.6250	2.6250	2.1250	0.28	0.13	5.20	4.76	7.56	7.94	1.79	108300	-0.74
702	782-772	4.1250	7.1250	1.8750	1.8900	1.5000	0.14	0.13	4.80	4.57	6.34	6.61	1.51	51400	-0.32
703	786-772	4.1250	7.1250	1.8750	1.8900	1.5000	0.25	0.13	5.04	4.57	6.34	6.61	1.51	51400	-0.32
704	787-772	4.1250	7.1250	1.8750	1.8900	1.5000	0.28	0.13	5.08	4.57	6.34	6.61	1.51	51400	-0.32
705	71412-71750	4.1250	7.5000	1.8750	1.9375	1.3750	0.14	0.13	4.88	4.65	6.73	7.13	1.40	58300	-0.26

1/ Part numbers are for reference only. Part numbers reflect the cup and cone numbers used by industry and the American Bearing Manufacturers Association (ABMA).
2/ These maximum fillet radii shall be cleared by the bearing corners.
3/ Minus value indicates load center inside cone backface.
* Column headings in the above table refer to bearing characteristics defined in figure 1.

TABLE I. Size codes and dimensions (continued).*

Size code	Part /1 number	d	D	T	B	C	R 2/	r 2/	d_b	d_a	D_b	D_a	K factor	Basic dynamic load ratings (lb.)	a 3/
		Bore	Outside diameter	Bearing width	Cone width	Cup width	Max. shaft fillet radius	Max. housing fillet radius	Recommended shoulder diameters						Effective load center
	Cone-cup								Shaft		Housing			Radial	
706	56418-56650	4.1875	6.5000	1.4375	1.4375	1.0625	0.14	0.13	4.80	4.57	5.87	6.26	1.18	36600	0.08
707	L521949-L521910	4.2500	5.7500	0.8438	0.8438	0.6563	0.06	0.06	4.57	4.49	5.35	5.55	1.49	15700	0.19
708	L521949-L521914	4.2500	6.0000	0.8438	0.8438	0.6563	0.06	0.06	4.57	4.49	5.47	5.67	1.49	15700	0.19
709	LM522546-LM522510	4.2500	6.2987	1.3750	1.3750	1.0625	0.14	0.13	4.80	4.57	5.75	6.06	1.45	31600	-0.06
710	48190-48120	4.2500	6.3750	1.3750	1.3750	1.0625	0.14	0.13	4.80	4.57	5.75	6.14	1.16	31000	0.15
711	56425-56650	4.2500	6.5000	1.4375	1.4375	1.0625	0.14	0.13	4.84	4.61	5.87	6.26	1.18	36600	0.08
712	56425-56662	4.2500	6.6250	1.4375	1.4375	1.0625	0.14	0.13	4.84	4.61	5.94	6.34	1.18	36600	0.08
713	67425-67675	4.2500	6.7500	1.3386	1.1875	0.9948	0.14	0.13	4.84	4.57	6.14	6.46	1.24	32000	0.18
714	71425-71750	4.2500	7.5000	1.8750	1.9375	1.3750	0.14	0.13	4.96	4.72	6.73	7.13	1.40	58300	-0.26
715	HH224340-HH224310	4.2500	8.3750	8.3750	2.6250	2.1250	0.31	0.13	5.47	4.96	7.56	7.94	1.79	108300	-0.74
716	71437-71750	4.3750	7.5000	1.8758	1.9375	1.3750	0.14	0.13	5.08	4.84	6.73	7.13	1.40	58300	0.26
717	L623149-L623110	4.5000	6.0000	0.8438	0.8438	0.6563	0.06	0.06	4.84	4.72	5.63	5.79	1.41	16300	0.25
718	64450-64700	4.5000	7.0000	1.6250	1.6250	1.1875	0.14	0.13	5.16	4.92	6.30	6.77	1.13	44300	0.05
719	64450-64708	4.5000	7.0856	1.6250	1.6250	1.1875	0.14	0.13	5.16	4.92	6.34	6.81	1.13	44300	0.05
720	68450-68712	4.5000	7.1250	1.3750	1.2500	1.0000	0.14	0.13	5.12	4.84	6.42	6.77	1.18	31800	0.21
721	71450-71750	4.5000	7.5000	1.8750	1.9375	1.3750	0.14	0.13	5.20	4.92	6.73	7.13	1.40	58300	-0.26
722	938-932	4.5000	8.3750	2.6250	2.6250	2.1250	0.28	0.13	5.55	5.04	7.36	7.60	1.79	83300	-0.78
723	HH224346-HH224310	4.5000	8.3750	2.6250	2.6250	2.1250	0.28	0.13	5.63	5.16	7.56	7.94	1.79	108300	-0.74
724	71453-71750	4.5310	7.5000	1.8750	1.9375	1.3750	0.14	0.13	5.24	4.96	6.73	7.13	1.40	58300	-0.26

1/ Part numbers are for reference only. Part numbers reflect the cup and cone numbers used by industry and the American Bearing Manufacturers Association (ABMA).
2/ These maximum fillet radii shall be cleared by the bearing corners.
3/ Minus value indicates load center inside cone backface.
* Column headings in the above table refer to bearing characteristics defined in figure 1.

TABLE I. Size codes and dimensions (continued).*

Size code	Part /1 number	d	D	T	B	C	R 2/	r 2/	d_b	d_a	D_b	D_a	K factor	Basic dynamic load ratings (lb.)	a 3/
		Bore	Outside diameter	Bearing width	Cone width	Cup width	Max. shaft fillet radius	Max. housing fillet radius	Recommended shoulder diameters						Effective load center
	Cone-cup								Shaft		Housing			Radial	
725	68462-68709	4.6250	7.0856	1.3750	1.2500	1.0000	0.14	0.03	5.20	4.92	6.50	6.77	1.18	31800	0.21
726	68462-68712	4.6250	7.1250	1.3750	1.2500	1.0000	0.14	0.13	5.20	4.92	6.42	6.77	1.18	31800	0.21
727	68463-68712	4.6250	7.1250	1.3750	1.2500	1.0000	0.31	0.13	5.51	4.92	6.42	6.77	1.18	31800	0.21
728	L624549-L624510	4.7500	6.3125	0.8438	0.8438	0.6563	0.06	0.06	5.08	5.00	5.91	6.10	1.34	17300	0.33
729	L225842-L225810	4.7500	6.6875	1.0000	1.0313	0.8125	0.06	0.06	5.16	5.08	6.30	6.46	1.76	23300	0.10
730	M224749-M224711	4.7500	6.7812	1.4063	1.4375	1.0938	0.14	0.06	5.31	5.08	6.38	6.57	1.76	39700	-0.14
731	M2224749-M224710	4.7500	6.8750	1.4063	1.4375	1.0938	0.14	0.06	5.31	5.08	6.42	6.61	1.76	39700	-0.14
732	HM624749-HM624710	4.7500	7.5000	1.8125	1.8125	1.3750	0.14	0.06	5.43	5.20	6.85	7.24	1.37	58000	-0.15
733	795-792	4.7500	8.1250	1.8750	1.8750	1.3750	0.13	0.13	5.47	5.28	7.32	7.80	1.27	57000	-0.07
734	95475-95925	4.7500	9.2500	2.5000	2.5000	1.9375	0.25	0.13	5.87	5.39	8.23	8.54	1.58	89400	-0.55
735	HH228340-HH228310	4.7500	10.0000	3.0625	3.2500	2.4375	0.38	0.25	6.22	5.59	8.78	9.20	1.82	144400	-0.92
736	48286-48220	4.8750	7.1875	1.5625	1.5000	1.3125	0.14	0.03	5.47	5.24	6.61	6.93	1.91	43200	-0.22
737	LL225749-LL225710	5.0000	6.5313	0.7188	0.6875	0.5313	0.06	0.06	5.31	5.24	6.22	6.30	1.76	15000	0.24
738	L225849-L225810	5.0000	6.6875	1.0000	1.0313	0.8125	0.06	0.06	5.35	5.28	6.30	6.46	1.76	23300	0.10
739	L225849-L225818	5.0000	7.1250	1.0000	1.0313	0.8125	0.06	0.06	5.35	5.28	6.46	6.54	1.76	23300	0.10
740	48290-48220	5.0000	7.1875	1.5625	1.5000	1.3125	0.14	0.13	5.55	5.31	6.61	6.93	1.91	43200	-0.22
741	67388-67322	5.0000	7.7500	1.8125	1.8125	1.5000	0.14	0.13	5.67	5.43	7.09	7.44	1.70	56800	-0.25
742	74500-74850	5.0000	8.5000	1.8750	1.8750	1.3750	0.14	0.13	5.83	5.55	7.72	8.19	1.20	57800	0.09

1/ Part numbers are for reference only. Part numbers reflect the cup and cone numbers used by industry and the American Bearing Manufacturers Association (ABMA).
2/ These maximum fillet radii shall be cleared by the bearing corners.
3/ Minus value indicates load center inside cone backface.
* Column headings in the above table refer to bearing characteristics defined in figure 1.

TABLE I. Size codes and dimensions (continued).*

Size code	Part /1 number	d	D	T	B	C	R 2/	r 2/	d_b	d_a	D_b	D_a	K factor	Basic dynamic load ratings (lb.)	a 3/
		Bore	Outside diameter	Bearing width	Cone width	Cup width	Max. shaft fillet radius	Max. housing fillet radius	Recommended shoulder diameters						Effective load center
	Cone-cup								Shaft		Housing			Radial	
743	95500-95905	5.0000	9.0551	2.5000	2.5000	1.9375	0.25	0.13	6.06	5.59	8.15	8.54	1.58	89400	-0.55
744	95500-95925	5.0000	9.2500	2.5000	2.5000	1.9375	0.25	0.13	6.06	5.59	8.23	8.54	1.58	89400	-0.55
745	HH228349-HH228310	5.0000	10.0000	3.0625	3.2500	2.4375	0.38	0.25	6.46	5.83	8.78	9.20	1.82	144400	-0.92
746	HH231637-HH231610	5.0000	11.3750	3.2500	3.4375	2.2500	0.53	0.25	6.85	5.91	10.04	10.38	1.83	168000	-1.05
747	HH231637-HH231615	5.0000	11.6250	3.2500	3.4375	2.2500	0.53	0.25	6.85	5.91	10.16	10.38	1.83	168200	-1.05
748	799-792	5.0625	8.1250	1.8750	1.8750	1.3750	0.13	0.13	5.75	5.51	7.32	7.80	1.27	57000	-0.07
749	67389-67322	5.1250	7.7500	1.8125	1.8215	1.5000	0.14	0.13	5.75	5.55	7.09	7.44	1.70	56800	-0.25
750	799A-792	5.1250	8.1250	1.8750	1.8750	1.3750	0.14	0.13	5.83	5.59	7.32	7.80	1.27	57000	-0.07
751	LL327049-LL327010	5.2500	6.8125	0.7500	0.6875	0.5625	0.05	0.06	5.55	5.47	6.46	6.57	1.68	16100	0.30
752	L327249-L327210	5.2500	6.9688	1.0000	1.0313	0.8125	0.06	0.06	5.59	5.51	6.57	6.73	1.68	24000	0.16
753	L826949-L826914	5.2500	7.2500	1.0000	1.0000	0.7188	0.13	0.13	5.75	5.55	6.65	6.97	1.16	25700	0.48
754	48385-48320	5.2500	7.5000	1.5625	1.5625	1.3125	0.14	0.13	5.83	5.59	6.97	7.24	1.82	43800	-0.16
755	67390-67322	5.2500	7.7500	1.8125	1.8125	1.5000	0.14	0.13	5.87	5.63	7.09	7.44	1.70	56800	-0.25
756	67391-67322	5.2500	7.7500	1.8125	1.8125	1.5000	0.31	0.13	6.18	5.63	7.09	7.44	1.70	56800	-0.25
757	74525-74850	5.2500	8.5000	1.8750	1.8750	1.3750	0.14	0.13	5.98	5.75	7.72	8.19	1.20	57800	0.09
758	95525-95925	5.2500	9.2500	2.5000	2.5000	1.9375	0.38	0.13	6.54	5.83	8.23	8.54	1.58	89400	-0.55
759	95528-95925	5.2500	9.2500	2.5000	2.5000	1.9375	0.19	0.13	6.18	5.83	8.23	8.54	1.58	89400	-0.55
760	48393-48320	5.3750	7.5000	1.5625	1.5625	1.3125	0.14	0.13	5.94	5.67	6.97	7.24	1.82	43800	-0.16

1/ Part numbers are for reference only. Part numbers reflect the cup and cone numbers used by industry and the American Bearing Manufacturers Association (ABMA).
2/ These maximum fillet radii shall be cleared by the bearing corners.
3/ Minus value indicates load center inside cone backface.
* Column headings in the above table refer to bearing characteristics defined in figure 1.

TABLE I. Size codes and dimensions (continued).*

Size code	Part /1 number	d	D	T	B	C	R 2/	r 2/	d_b	d_a	D_b	D_a	K factor	Basic dynamic load ratings (lb.)	a 3/
		Bore	Outside diameter	Bearing width	Cone width	Cup width	Max. shaft fillet radius	Max. housing fillet radius	Recommended shoulder diameters						Effective load center
	Cone-cup								Shaft		Housing			Radial	
761	LM229140C-LM229110	5.3750	7.6762	1.2992	1.2992	1.0827	0.14	0.14	5.98	5.75	7.17	7.48	1.76	41300	0.04
762	74537-74550	5.3750	8.5000	1.8750	1.8750	1.3750	0.14	0.13	6.10	5.83	7.72	8.19	1.20	57800	0.09
763	896-892	5.3750	9.0000	2.2500	2.2500	1.7500	0.14	0.13	6.14	5.91	8.07	8.50	1.39	83300	-0.24
764	LL428349-LL428310	5.5000	7.1250	0.8438	0.8125	0.6563	0.06	0.06	5.83	5.75	6.77	6.89	1.60	11100	0.31
765	LM328448-LM328410	5.5000	7.3750	1.1250	1.1563	0.9063	0.06	0.06	5.87	5.79	6.93	7.17	1.65	31200	0.14
766	74550-74845	5.5000	8.4636	1.8750	1.8750	1.3750	0.14	0.13	6.22	5.94	7.72	8.19	1.20	57800	0.09
767	74550-74850	5.5000	8.5000	1.8750	1.8750	1.3750	0.14	0.13	6.22	5.94	7.72	8.19	1.20	57800	0.09
768	74550A-74850	5.5000	8.5000	1.8750	1.8750	1.3750	0.25	0.13	6.42	5.94	7.72	8.19	1.20	57800	0.09
769	73551-73875	5.5000	8.7500	1.3750	1.2450	0.9375	0.14	0.13	6.14	5.91	8.03	8.15	1.34	40300	0.25
770	898-892	5.5000	9.0000	2.2500	2.2500	1.7500	0.14	0.13	6.30	6.02	8.07	8.50	1.39	83300	-0.24
771	898A-892	5.5000	9.0000	2.2500	2.2500	1.7500	0.25	0.13	6.50	6.02	8.07	8.50	1.39	83300	-0.24
772	82550-82950	5.5000	9.5000	2.2500	2.2300	1.7500	0.14	0.13	6.34	6.06	8.46	8.90	1.32	65200	-0.14
773	99550-99100	5.5000	10.000	2.6250	2.6250	1.8750	0.28	0.13	6.69	6.14	8.94	9.37	1.43	91400	-0.48
774	HH231649-HH231610	5.5000	11.3750	3.2500	3.4375	2.2500	0.38	0.25	6.97	6.34	10.04	10.38	1.83	168200	-1.05
775	HH231649-HH231615	5.5000	11.6250	3.2500	3.4375	2.2500	0.38	0.25	6.97	6.34	10.16	10.38	1.83	168200	-1.05
776	HH234031-HH234010	5.5000	12.1250	3.5000	3.6875	2.6250	0.38	0.27	7.09	6.61	10.87	11.24	1.79	194800	-1.04
777	EE450551-EE451212	5.5000	12.1250	3.5000	3.6875	2.4375	0.38	0.27	7.09	6.61	10.59	10.38	1.79	147200	-1.07
778	HH234031-HH234018	5.5000	12.5000	3.5000	3.6875	2.6250	0.38	0.27	7.09	6.61	11.02	11.24	1.79	194800	-1.04

1/ Part numbers are for reference only. Part numbers reflect the cup and cone numbers used by industry and the American Bearing Manufacturers Association (ABMA).
2/ These maximum fillet radii shall be cleared by the bearing corners.
3/ Minus value indicates load center inside cone backface.
* Column headings in the above table refer to bearing characteristics defined in figure 1.

TABLE I. Size codes and dimensions (continued).*

Size code	Part /1 number	d	D	T	B	C	R 2/	r 2/	d_b	d_a	D_b	D_a	K factor	Basic dynamic load ratings (lb.)	a 3/
		Bore	Outside diameter	Bearing width	Cone width	Cup width	Max. shaft fillet radius	Max. housing fillet radius	Recommended shoulder diameters						Effective load center
	Cone-cup								Shaft		Housing			Radial	
779	48685-48620	5.6250	7.8750	1.6250	1.5625	1.3437	0.14	0.13	6.22	5.94	7.28	7.60	1.74	43500	-0.12
780	73562-73875	5.6250	8.7500	1.3750	1.2450	0.9375	0.14	0.13	6.26	5.98	8.03	8.15	1.34	40300	0.25
781	LL529749-LL529710	5.7500	7.4063	0.8750	0.8125	0.6563	0.06	0.06	6.10	5.98	7.05	7.17	1.53	18700	0.37
782	36690-36620	5.7500	7.6250	1.1250	1.1250	0.9063	0.06	0.06	6.10	6.02	7.17	7.40	1.59	32000	0.19
783	36691-36620	5.7500	7.6250	1.1250	1.1250	0.9063	0.19	0.06	6.38	6.02	7.17	7.40	1.59	32000	0.19
784	82576-82931	5.7500	9.3125	2.2500	2.2300	1.7500	0.14	0.13	6.54	6.30	8.39	8.90	1.32	82500	-0.14
785	HM231140-HM231110	5.7500	9.3125	2.2500	2.2300	1.7500	0.14	0.13	6.46	6.30	8.54	8.82	1.83	86500	-0.45
786	82576-82950	5.7500	9.5000	2.2500	2.2300	1.7500	0.14	0.13	6.54	6.30	8.46	8.90	1.32	82500	-0.14
787	99575-99100	5.7500	10.0000	2.6250	2.6250	1.8750	0.28	0.13	6.89	6.38	8.94	9.37	1.43	91400	-0.48
788	EE107057-107105	5.7500	10.5625	2.9375	2.9375	2.2500	0.25	0.25	6.93	6.54	9.33	9.82	1.51	119700	-0.59
789	HM231148-HM231110	5.8750	9.3125	2.2500	2.2300	1.75000	0.25	0.13	6.77	6.42	8.54	8.82	1.83	86500	-0.45
790	HM231149-HM231110	5.8750	9.3125	2.2500	2.2300	1.7500	0.14	0.13	6.57	6.42	8.54	8.82	1.83	86500	-0.45
791	99587-99100	5.8750	10.0000	2.6250	2.6250	1.8750	0.28	0.13	7.01	6.50	8.94	9.37	1.43	91400	-0.48
792	L630349-L630310	6.0000	7.5625	0.9843	0.9449	0.7480	0.08	0.08	6.38	6.22	7.20	7.36	1.40	13900	0.40
793	L730649-L730610	6.0000	8.0000	1.1250	1.1250	0.8440	0.13	0.13	6.50	6.30	7.48	7.80	1.27	31700	0.45
794	LM330448-LM330410	6.0000	8.0000	1.6250	1.6250	1.3750	0.13	0.13	6.54	6.37	7.44	7.76	1.68	45700	-0.07
795	M231648-M231610	6.0000	8.7500	1.8437	1.8437	1.3750	0.31	0.06	7.01	6.42	8.15	8.39	1.76	55000	-0.24

1/ Part numbers are for reference only. Part numbers reflect the cup and cone numbers used by industry and the American Bearing Manufacturers Association (ABMA).
2/ These maximum fillet radii shall be cleared by the bearing corners.
3/ Minus value indicates load center inside cone backface.
* Column headings in the above table refer to bearing characteristics defined in figure 1.

TABLE I. Size codes and dimensions (continued).*

Size code	Part /1 number	d	D	T	B	C	R 2/	r 2/	d_b	d_a	D_b	D_a	K factor	Basic dynamic load ratings (lb.)	a 3/
		Bore	Outside diameter	Bearing width	Cone width	Cup width	Max. shaft fillet radius	Max. housing fillet radius	Recommended shoulder diameters						Effective load center
	Cone-cup								Shaft		Housing			Radial	
796	M231649-M231610	6.0000	8.7500	1.8437	1.8437	1.3750	0.14	0.06	6.65	6.42	8.15	8.39	1.76	55000	-0.24
797	99600-99100	6.0000	10.0000	2.6250	2.6250	1.8750	0.28	0.13	7.13	6.68	8.94	9.37	1.43	91400	-0.48
798	EE107060-107105	6.0000	10.5625	2.9375	2.9375	2.2500	0.25	0.25	7.13	6.73	9.33	9.82	1.51	119700	-0.59
799	HH234048-HH234010	6.0000	12.1250	3.5000	3.6875	2.6250	0.38	0.27	7.52	7.05	10.87	11.24	1.79	194800	-1.04
800	EE450601-451212	6.0000	12.1250	3.5000	3.6875	2.4375	0.38	0.27	7.44	6.97	10.59	10.82	1.79	168200	-1.11
801	HH23404S-HH234018	6.0000	12.5000	3.5000	3.6875	2.6250	0.38	0.27	7.52	7.05	11.02	11.24	1.79	194800	-1.04

1/ Part numbers are for reference only. Part numbers reflect the cup and cone numbers used by industry and the American Bearing Manufacturers Association (ABMA).
2/ These maximum fillet radii shall be cleared by the bearing corners.
3/ Minus value indicates load center inside cone backface.
* Column headings in the above table refer to bearing characteristics defined in figure 1.

3. SALIENT CHARACTERISTICS

3.1 Dimensions. Bearing dimensions (and dynamic load ratings, see 3.4) shall conform to the requirements specified in table I for each of the bearing part numbers. The listed dimensions conform to the requirements specified in American National Standards Institute/American Bearing Manufacturers Association (ANSI/ABMA) Standard 19.2, "Tapered Roller Bearings - Radial Inch Design" (DoD adopted). The bearing size shall be specified in the acquisition order (see 7.4(b)). For any unlisted bearing size codes, the associated dimensional and dynamic load rating requirements should also be specified in the acquisition order.

3.2 Materials.

3.2.1 Cones (inner rings), cups (outer rings), and rollers. The bearing cones, cups, and rollers shall be made of case carburized or through-hardened steel produced in accordance with the American Society for Testing and Materials (ASTM) A 295, "Standard Specification for High-Carbon Anti-Friction Bearing Steel" (DoD adopted), ASTM A 534, "Standard Specification for Carburizing Steels for Anti-Friction Bearings" (DoD adopted), or ASTM A 535, "Standard Specification for Special-Quality Ball and Roller Bearing Steel" (DoD adopted). The steel shall show a fine fracture grain size in accordance with ASTM E 112, "Standard Test Methods for Determining Average Grain Size" (DoD adopted). Material hardness shall be no less than 58 HRC and no more than 64 HRC as defined in ASTM E 18, "Standard Test Methods for Rockwell Hardness and Rockwell Superficial Hardness of Metallic Materials" (DoD adopted).

3.2.2 Cage. The bearing cage material shall be impervious to deterioration from any lubricant, preservative, solvent, or other chemical substance expected to contact the bearing during normal use or storage. Similarly, the material shall not cause any chemical deterioration of any other bearing component. The cages shall be made from carbon steel (one piece stamped). Materials shall operate from -65 to 230 °F.

3.3 Tolerance class. The tolerance limits for bearings shall conform to tolerance class 4 as tabulated in ABMA Standard 19.2. Allowable tolerances for bearing components and assembled bearings are listed in tables II through V.

3.4 Dynamic load rating. The bearing dynamic load rating shall conform to the requirements specified in table I for each bearing size code. The listed ratings conform to the requirements specified in ABMA Standard 11, "Load Ratings and Fatigue Life for Roller Bearings".

3.5 Effective load center. Dimension (a) in figure 1 locates a point on the cone axis, which is the center of pressure of all resisting forces set up by the rollers. All moments should be calculated from this point when determining bearing loading and shaft stresses. A plus value of (a) indicates that the center is outside the cone backface.

TABLE II. Cone bore tolerance.

Cone bore (d)			
Size range		Tolerance	
Over	Incl.	Plus	Minus
0	3.0000	5	0
3.0000	6.0000	10	0

Note: Allowable tolerances are in 0.0001 inch.

TABLE III. Cup diameter tolerance.

Cup diameter (D)			
Size range		Tolerance	
Over	Incl.	Plus	Minus
0.0000	12.0000	10	0
12.0000	24.0000	20	0

Note: Allowable tolerances are in 0.0001 inch.

TABLE IV. Bearing width tolerance.

Bearing width (T)			
Bore size range		Tolerance	
Over	Incl.	Plus	Minus
0	4.0000	80	0
4.0000	6.0000	140	100

Note: Allowable tolerances are in 0.0001 inch.

TABLE V. Assembled bearing tolerance.

Assembled bearing maximum radial runout		
Cup OD (D)		Tolerance
Over	Incl.	
0	24.0	20

Note: Allowable tolerances are in 0.0001 inch.

3.6 Lubrication and preservation. The bearings shall be furnished without lubrication and shall be preserved for packaging in accordance with MIL-DTL-197, "Packaging of Bearings, Antifriction Associated Parts and Subassemblies". If a preservative compound is required for packing or storage, the compound name shall be specified in the acquisition order (see 7.4(c)).

3.7 Normal angle. A normal angle bearing has a contact angle between 10 and 19 degrees. The contact angle is the angle between the line of action of the roller load and a plane perpendicular to the bearing axis.

4. REGULATORY REQUIREMENTS

4.1 Recovered materials. The offeror/contractor is encouraged to use recovered materials to the maximum extent practicable, in accordance with paragraph 23.403 of the Federal Acquisition Regulation (FAR).

4.2 Unless otherwise indicated in the solicitation and resulting contract, the foreign acquisition restrictions in Section 225.7019 of the Defense Federal Acquisition Regulation Supplement (DFARS) apply to products described by this CID.

5. PRODUCT CONFORMANCE PROVISIONS

5.1 Product conformance. The products provided shall meet the salient characteristics of this commercial item description, conform to the producer's own drawings, specifications, standards, and quality assurance practices, and be the same product offered for sale in the commercial marketplace. The government reserves the right to require proof of such conformance.

5.2 Market acceptability. The product offered must have been previously sold either to the government or on the commercial market.

6. PACKAGING

6.1 Preservation, packing, and marking. For acquisition purposes, the bearings supplied shall be preserved, packed, and marked as specified in the acquisition order (see 7.4(d)).

7. NOTES

7.1 Sources of documents.

7.1.1 FAR and DFARS. Copies of the FAR and DFARS may be obtained from the Superintendent of Documents, P.O. Box 371954, Pittsburgh, PA 15250-7954. Electronic copies of the FAR may be obtained from http://www.arnet.gov/far/. Electronic copies of the DFARS may be obtained from http://www.acq.osd.mil/dp/dars/dfars.html.

7.1.2 Military specifications. Copies of military specifications may be obtained from Standardization Documents Order Desk, 700 Robbins Avenue, Building 4D, Philadelphia, PA 19111-5094. Electronic copies of military specifications may be obtained from http://astimage.daps.dla.mil/quicksearch/.

7.1.3 ABMA standards. Copies of ABMA standards may be obtained from the American Bearing Manufacturers Association, 2025 M Street NW, Suite 800, Washington, DC 20036. Electronic copies of ABMA standards may be obtained from http://www.abma-dc.org/.

7.1.4 ASTM standards. Copies of ASTM standards may be obtained from the American Society for Testing and Materials, 100 Barr Harbor Drive, West Conshohocken, PA 19428-2959. Electronic copies of ASTM standards may be obtained from http://www.astm.org/.

7.2 Part or identification number (PIN). The following part or identification numbering procedure is for government purposes and does not constitute a requirement for the contractor.

AA59649 - 002 Example of reference part number

Size code (see table I)

CID number

AA59649 - 002 indicates: bearing bore 0.5000 inches; outside diameter 1.3775 inches; width 0.4330 inches.

7.3 Sources of supply. The manufacturers and/or suppliers listed below are known to supply products that meet the salient characteristics requirements of this document. Competition is not limited to the listed firms.

KOYO Corporation of U.S.A.
Westlake, OH 44145

FAG Bearings Corporation
Danbury, CT 06813

NTN Bearing Corporation
Mount Prospect, IL 60056

SKF Industries
Kulpsville, PA 19443

7.4 Ordering data. Acquisition documents shall specify the following information:

a. CID document number, revision, and CID PIN
b. Bearing size (with dimension/load requirements if size is unlisted) (see 3.1)
c. Preservative compound, if required (see 3.6)
d. Preservation, packing, and marking requirements (see 6.1)

7.5 Cross-reference information. Table VI relates the original specification slant sheets to the replacement CIDs.

TABLE VI. Cross reference table.

FF-B-187B	Replacement CID	ABMA type
Specification sheet 1	A-A-59649A	TS
Specification sheet 2	A-A-59650	TSF
Specification sheet 3	A-A-59651	TSS
Specification sheet 4	A-A-59652	TSSF
Specification sheet 5	A-A-59653	TDI & TDIS
Specification sheet 6	A-A-59654	TDO
Specification sheet 7	A-A-59655	TDOS
Specification sheet 8	A-A-59656	TNA (normal angle)
Specification sheet 9	A-A-59657	TNAS (steep angle)
Specification sheet 10	A-A-59658	TNASW
Specification sheet 11	A-A-59659	TNASWE

7.6 Subject term (key word) listing.

bore
cone
cup
load
width

MILITARY INTERESTS:

Custodians:
Army - AR
Navy - YD
Air Force - 99

Reviewers:
Navy - MC, OS
Air Force - 84

CIVIL AGENCY
COORDINATING ACTIVITY:

GSA - 7FXE

Preparing activity:
DLA - GS4

(Project 3110-1266)