Downloaded from http://www.everyspec.com

INCH-POUND
A-A-59606/3A
4 September 2013
SUPERSEDING
A-A-59606/3
23 August 2002

COMMERCIAL ITEM DESCRIPTION
SPECIFICATION SHEET

ARM, WINDSHIELD WIPER, ADJUSTABLE, HEAVY DUTY (CLASS B)

The General Services Administration has authorized the use of this commercial item description for all federal agencies.

The complete requirements for procuring the heavy duty, adjustable, windshield wiper arm described herein shall consist of this document and the issue in effect of A-A-59606.

CLASSIFICATION/PART OR IDENTIFICATION NUMBER (PIN). This commercial item description (CID) specification sheet uses a classification system which is included in the PIN as shown in the following example (see NOTES).

AA59606/3	-XX
CID number and applicable CID specification sheet	Dash number (see table I)

SALIENT CHARACTERISTICS.

Interface and physical dimensions. Heavy duty, adjustable, windshield wiper arms supplied to this CID specification sheet shall and be as specified herein (see figure 1 and table I).

Downloaded from http://www.everyspec.com

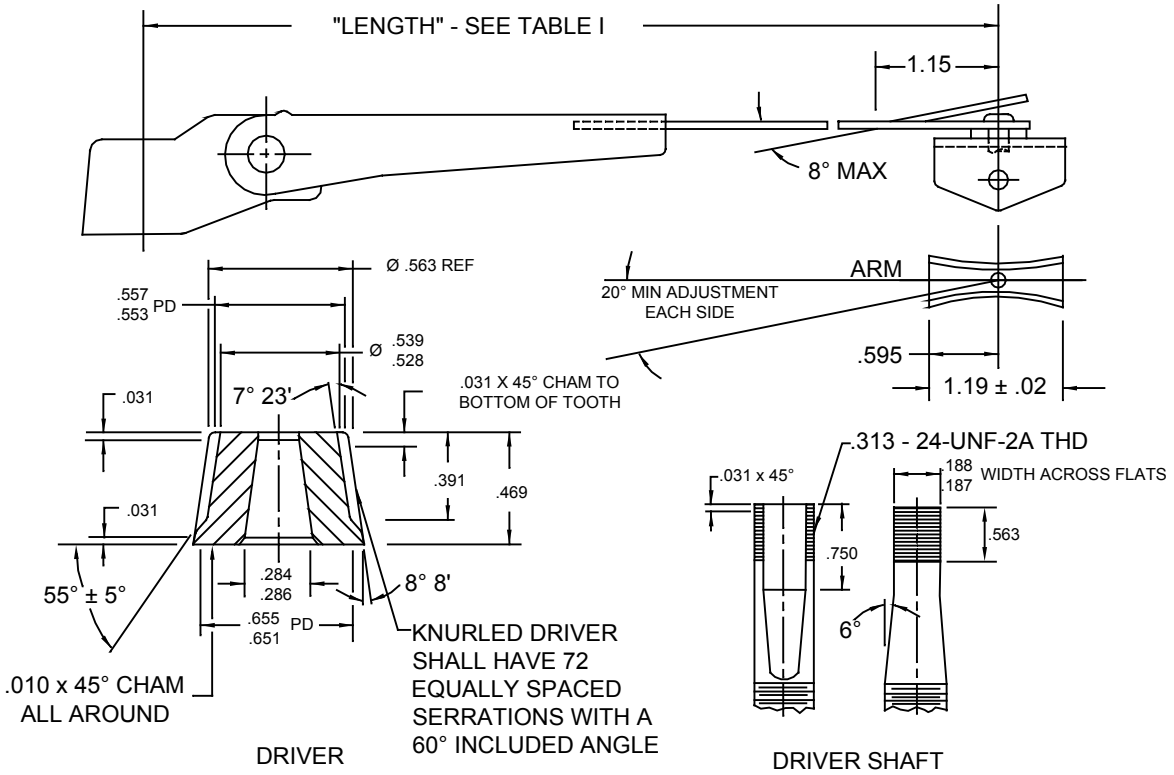

NOTES: 1. Dimensions are in inches.
2. Unless otherwise specified, tolerances are: ± .01 decimals; ± 1° angles.

FIGURE 1. Wiper arm dimensions.

TABLE I. Dash codes.

Dash number	Adjustable Length (in)
-01	10.50 - 14.25
-02	15.00 - 19.00

NOTES.

PIN. The PIN should be used for Government purposes to buy commercial products to this CID. See classification section for PIN format example.

Downloaded from http://www.everyspec.com

Source of documents.

COMMERCIAL ITEM DESCRIPTIONS

A-A-59606 - Arm, Windshield Wiper: Blade, Windshield Wiper: and Blade Refill, Windshield Wiper.

(Copies of these documents are available online at http://quicksearch.dla.mil/ or from the Standardization Document Order Desk, 700 Robbins Avenue, Building 4D, Philadelphia, PA 19111-5094.)

Commercial products. As part of the market analysis and research effort, this CID specification sheet was coordinated with the following manufacturers of commercial products. At the time of CID specification sheet preparation and coordination, these manufacturers were known to have commercial products that would meet the requirements of this CID specification sheet. (NOTE: This information should not be considered as a list of approved manufacturers or be used to restrict procurement to only the manufacturers shown.)

MFR's CAGE	MFR's name and address
70412	Federal Mogul Wiper Products (Formerly ANCO Division - Cooper Industries) 26555 Northwestern Highway Southfield, MI 48033 (248) 354-7700
60703	Trico Products Co. 3255 W. Hamlin Rd. Rochester Hill, MI (956) 544-2722 tsnsupport@tricoproducts.com

Part number (P/N) supersession data. These CID specification sheet PINs supersede the following manufacturer's P/N's as shown. This information is being provided to assist in reducing proliferation in the Government inventory system (see table II).

TABLE II. P/N supersession data.

CID PIN (see table I)	MFR's CAGE	MFR's P/N 1/
AA59606/3-01	None	None
AA59606/3-02	None	None

1/ The manufacturer's P/N shall not be used for procurement to the requirements of this CID. At the time of preparation of this CID, the aforementioned commercial products were reviewed and could be replaced by the CID PIN shown. For actual part marking requirements see CID A-A-59606.

Changes from previous issue. Marginal notations are not used in this revision to identify changes with respect to the previous issue, due to the extent of the changes.

Downloaded from http://www.everyspec.com

MILITARY INTERESTS:

Custodians:
Army - AT
Navy - MC
Air Force - 99
DLA - CC

Review activities:
Navy - SA
Air Force - 84

CIVIL AGENCY COORDINATING ACTIVITY:
GSA-FSS

Preparing activity:
DLA - CC
(Project 2540-2013-004)

NOTE: The activities listed above were interested in this document as the date of this document. Since organizations and responsibilities can change, you should verify the currency of the information above using the ASSIST Online database at https://assist.dla.mil/.