Downloaded from http://www.everyspec.com

INCH-POUND
A-A-59488A
05 February 2010
SUPERSEDING
A-A-59488
31 August 1999

COMMERCIAL ITEM DESCRIPTION

DECKING, SYNTHETIC

The General Services Administration has authorized the use of this commercial item description, for all federal agencies.

1. SCOPE. This Commercial Item Description (CID) describes the requirements of synthetic decking made from Ultra High Molecular Weight Polyethylene (UHMWPE). Synthetic decking is intended for use in the well decks of U.S. Navy amphibious ships that carry boats, landing craft, and other equipment. Adverse sea conditions and the ability to control boats and landing craft within the well area, when open to the sea, require that a durable and abrasion-resistant deck covering be used to provide some form of protection to both the ship and the service craft.

2. CLASSIFICATION.

2.1 Type Unless otherwise specified, synthetic decking shall be provided in a thickness of either 2.5 inches (63.5 millimeters) or 3.5 inches (88.9 millimeters) and in types and sizes as specified in the installation drawing. Panels shall be either the M-shaped cross section pattern (see 3.2, Figures 1 and 2), the Waffle-shaped (lightweight) cross section pattern (see 3.2, Figures 3 and 4), or a solid panel design. The M-shaped cross section decking shall be running in the fore to aft direction (see 3.2). Thinner, wider, or solid panels (not having the M-shaped or Waffle-shaped cross section) may be necessary to suit dimensional requirements or special conditions on the installation drawing.

3. SALIENT CHARACTERISTICS.

3.1 Material. Synthetic decking shall be made using UHMWPE formulation. The UHMWPE material shall use a base virgin resin made in accordance with ASTM D4020 and have a nominal molecular weight of 3.1×10^6 or greater. The use of additives and/or fillers with the virgin resin material shall be used to achieve the synthetic decking properties specified herein as long as the additives and/or fillers are evenly distributed throughout the panel to provide a 100 percent uniform mix and homogeneous-type formulation throughout the cross section.

3.1.1 Material properties. The synthetic decking material shall meet all of the following requirements specified over a normal operating temperature range of -20 to +125 °F (-28.9 to +51.7 °C). Unless otherwise specified within the documented test methods, all testing shall be conducted at +75 °F (+23.9 °C). A temperature variation of ±9 °F (5 °C) shall be allowed for test purposes. The material property requirements are summarized in table I.

3.1.1.1 Thermal expansion. The synthetic decking formulation shall take into account the thermal expansion and contraction that may occur over the normal operating temperature range specified (see 3.1.1). The thermal effects on the overall thickness, length, and width of the synthetic decking shall not be greater than a coefficient of thermal expansion of 8.4×10^{-5}/°F (1.5×10^{-4}/°C) when tested in accordance with ASTM D696.

Beneficial comments, recommendations, additions, deletions, clarifications, etc. and any data that may improve this document should be sent to: Commander, Naval Sea Systems Command, ATTN: SEA 05B5, 1333 Isaac Hull Avenue, SE, Stop 5160, Washington Navy Yard DC 20376-5160 or emailed to CommandStandards@navy mil, with the subject line "Document Comment". Since contact information can change, you may want to verify the currency of this address information using the ASSIST Online database at http://assist.daps.dla.mil.

Downloaded from http://www.everyspec.com

3.1.1.2 Flame spread. The test specimens shall be prepared and tested in accordance with ASTM E162 and shall not exceed a 25 Is (flame spread index) value. The test specimens shall be placed in the test fixture so that the high traction surface faces the flame source. The test specimens shall exhibit no dripping, puddling, or exfoliation during the test and shall not exhibit any burning or smoldering after the flame source has been removed. Surface coatings shall not be used to retard burning of the synthetic decking.

3.1.1.3 Smoke density. The test specimen shall be evaluated to determine the relative amount of smoke produced by burning or decomposition in accordance with ASTM E662. The test specimens shall be placed in the test fixture so that the high traction surface faces the flame source. The smoke generated during the flaming and nonflaming modes shall not exceed 450 Dm (maximum specific optional density).

3.1.1.4 Impact resistance. A test specimen shall be prepared and tested as described in ASTM D256, Method A (except that the Izod specimens shall be unnotched). The high traction surface is not to be included as part of the test specimens. These unnotched test specimens shall be capable of absorbing an Izod impact condition of 45 inch-pounds/inch (202.5 Joules/meter). No breakage or cracking of the test specimen is permitted.

3.1.1.5 Coefficient of friction. The high-traction top surface of the synthetic decking (see 3.2.2) shall be manufactured so that the coefficient of friction value does not fall below 0.75 when tested in either the dry, wet, or oily surface conditions as determined from the WCM procedure specified in UL 410.

3.1.1.6 Water absorption. The synthetic decking material shall not absorb more than 1 percent of its original weight when immersed in water as defined in ASTM D570.

3.1.1.7 Chemical resistance. The synthetic decking material shall not exhibit a weight increase of greater than 0.50 percent or a dimensional change of 0.10 percent when immersed in the following fluids and tested in accordance with ASTM D543. The synthetic decking shall not experience any degradation or loss of material properties so that it fails to meet any of the other requirements specified within this document.

a. Aqueous film-forming foam (AFFF) firefighting fluid made from six parts of foam concentrate and 94 parts of seawater in accordance with MIL-F-24385. Synthetically formulated seawater is acceptable for this test if natural seawater is not available.

b. Hydraulic fluid in accordance with MIL-H-19457.

c. JP-5 aviation fuel in accordance with MIL-DTL-5624.

d. Lubricating oil in accordance with MIL-PRF-7808.

e. Gasoline in accordance with ASTM D4814.

3.1.1.8 Corrosion. The synthetic decking shall not have a corrosive effect on steel, galvanized steel, stainless steel, or aluminum when exposed to salt water or freshwater wash down conditions normally encountered in well deck service or when in contact with the chemical reagents specified in 3.1.1.7.

3.1.1.9 Compression set. The synthetic decking shall not incur a permanent compressive strain of more than 10 percent when tested in accordance with ASTM D695. A load generating 500 lb/in^2 (3.5 N/mm^2) shall be used for the test.

3.1.1.10 Color. Unless otherwise specified in the Ordering Data (see 7.2), the color of the synthetic decking shall be black.

3.1.1.11 Paintability. The high-traction surface of the synthetic decking shall be capable of being painted for marking and coding. White paint, color number 17875, or yellow paint, color number 13538, specified in Naval Ships' Technical Manual (NSTM) 631, shall be used to ensure compliance.

Downloaded from http://www.everyspec.com

Table I. Summary of synthetic decking material property requirements.

Properties	Units	Requirements	Test method
Operating temperature	°F	-20 to 125	N/A
	(°C)	(-28.9 to 51.7)	N/A
Coefficient of thermal expansion (between -30°C & +100°C)	/°C	$1.5x10^{-4}$	ASTM D696
	/°F	$8.4x10^{-5}$	ASTM D696
Flame spread	Is	25	ASTM E162
Smoke density	Dm	450	ASTM E662
Impact resistance	inch-pound/inch	45	ASTM D256
	(J/m)	(202.5)	Method A
Coefficient of friction:	Dimensionless		
Dry condition		0.75	UL 410
Wetted with water condition		0.75	UL 410
Wetted with oil condition		0.75	UL 410
Water absorption	Percent increase	1.0	ASTM D570
Chemical resistance:	Percent increase in weight and dimensions		
Firefighting fluid		0.50 wt/0.10 dim.	ASTM D543
Hydraulic fluid		0.50 wt/0.10 dim.	ASTM D543
Aviation fuel		0.50 wt/0.10 dim.	ASTM D543
Lubricating oil		0.50 wt/0.10 dim.	ASTM D543
Gasoline		0.50 wt/0.10 dim.	ASTM D543
Compression	Percent	10.0	ASTM D695
Color	N/A	Black	Visual
Paintability	N/A	Pass	NSTM 631

Downloaded from http://www.everyspec.com

3.2 Construction. The formulated synthetic resin material shall be manufactured into 2.5-inch (63.5-millimeter) or 3.5-inch (88.9-millimeter) thick panels in types and sizes as specified on the applicable ship class installation drawings (see 2.1). Unless otherwise specified in the Ordering Data (see 7.2), the synthetic decking shall be the M-shaped cross section pattern (see figures 1 and 2), the Waffle-shaped (lightweight) pattern (see figures 3 and 4), or a solid panel. The M-shaped design shall have the "M" running parallel to the length of the panel (figure 2). The Waffle-shaped design shall have tapered legs with a diameter of 3 inches (76.2 millimeters), spaced 6 inches (152.4 millimeters) on centers oriented throughout the length and width of the panel (figure 4). Both M-shaped panels and the Waffle-shaped (lightweight) panels shall have a high-traction surface on its top face (see 3.2.2). In no case shall the pattern decrease the remaining panel thickness to less than 1.25 inches (31.8 millimeters) for 2.5-inch (63.5-millimeter) thick panels or 1.75 inches (44.5 millimeters) for the 3.5-inch (88.9-millimeter) thick panels. Solid panels (not having the M-shaped or the Waffle-shaped design) may be used to suit dimensional requirements or special condition on the installation drawing.

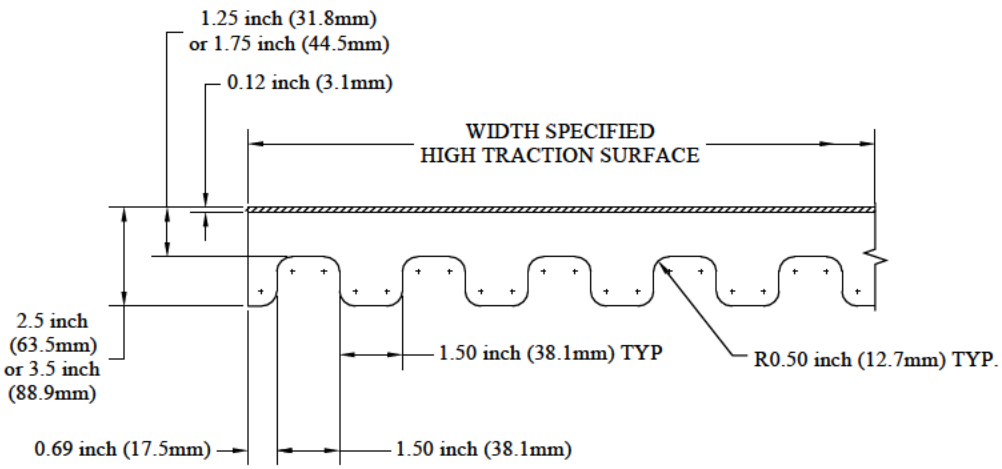

Figure 1. Typical synthetic decking M-shaped cross section (dimensions are nominal).

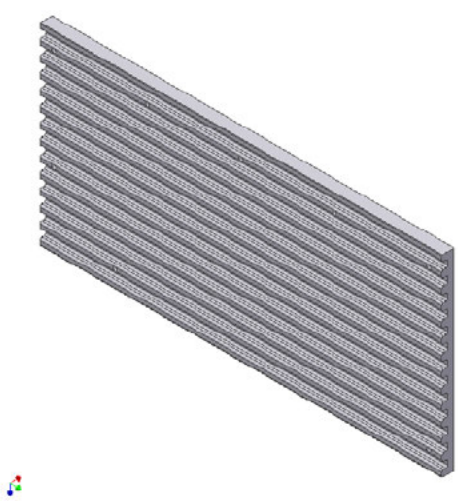

Figure 2. Typical synthetic decking M-shaped panel (bottom face shown – top face same as figure 1).

Downloaded from http://www.everyspec.com

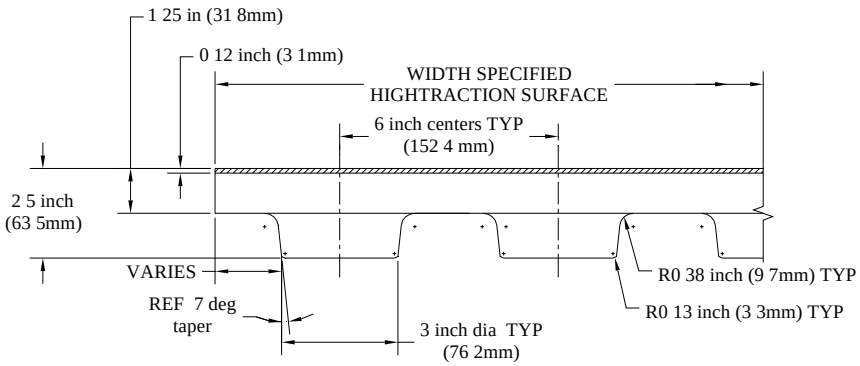

Figure 3. Typical synthetic decking Waffle-shaped cross section (dimensions are nominal).

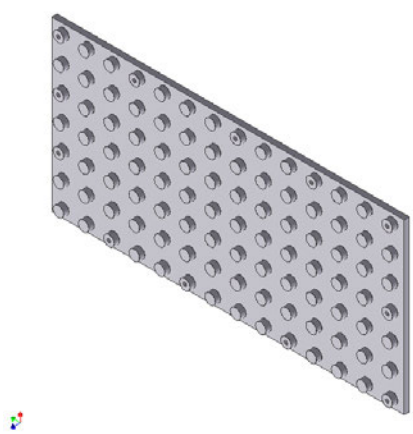

Figure 4. Typical synthetic decking Waffle-shaped (lightweight) panel (bottom face shown – top face same as figure 3).

3.2.1 Weight. The maximum weight for an M-shaped panel 12 inches by 12 inches (304.8 millimeters by 304.8 millimeters), or 1 square foot area, of synthetic decking shall be 11.2 pounds (5.1 kilograms) for the 2.5-inch (63.5-millimeter) thick panel and 15.5 pounds (7.0 kilograms) for the 3.5-inch (88.9-millimeter) thick panel. The maximum weight for a Waffle-shaped (lightweight) panel 12 inches by 12 inches (304.8 millimeters by 304.8 millimeters), or 1 square foot area, of synthetic decking shall be 8.7 pounds (3.74 kilograms) for the 2.5-inch (63.5-millimeter) thick material. The maximum weight for a solid panel 12 inches by 12 inches (304.8 millimeters by 304.8 millimeters), or 1 square foot area, of synthetic decking shall be 14.75 pounds (6.6 kilograms) for the 2.5-inch (63.5-millimeter) thick material.

3.2.2 High-traction surface. All synthetic decking panels shall incorporate a high-traction surface embedded to a minimum thickness of 0.12 inch (3.1 millimeters) into the top surface (see 3.2, figures 1 and 3). The non-skid surface shall be baked into the sheet to ensure it is a permanent part of the deck panel and not glued on, painted on, nor placed by any other cosmetic method and to ensure that the coefficient of friction requirements (see 3.1.1.5) are met and maintained throughout the full 0.12-inch (3.1-millimeter) thickness of the high-traction surface.

3.2.3 Structural integrity. The synthetic decking, including the high-traction surface, shall not delaminate, crack, splinter, peel, or spall when subjected to the testing included in this specification (see 3.1.1.4 for high-traction surface exception). Minor surface scuffing that may occur during testing is acceptable, but shall not cause a loss of structural integrity of the synthetic decking nor any degradation of its high-traction surface.

Downloaded from http://www.everyspec.com

3.2.4 Production tolerances. The maximum production tolerances for the overall thickness and width of the synthetic decking shall not be greater than ±0.12 inch (3.1 millimeters) of the dimensions specified on the applicable ship class installation drawing. The production length tolerance shall not be greater than ±0.50 inch (12.7 millimeters) of the length specified on the applicable ship class installation drawing.

3.2.5 Attachment tolerances. When specified in the Ordering Data (see 7.2), synthetic decking shall be provided with fastener mounting holes arranged in the hole patterns as shown on the applicable ship class installation drawing. Fastener mounting hole tolerances shall take into account the thermal expansion or contraction of the synthetic decking over the normal operating temperature range specified to ensure that panel buckling or binding problems do not occur.

3.2.6 Flatness, waviness, and straightness tolerances. The flatness variation of the as-received panel shall not exceed 0.50 inch (12.7 millimeters) for every 12 inches (304.8 millimeters) of panel surface distance across the width or the length of the panel. The waviness variations shall not exceed 0.50 inch (12.7 millimeters) at any point along the length of the synthetic decking. Flatness and waviness denote the maximum deviation of the top surface of the synthetic decking when resting on a flat horizontal surface. The straightness tolerance along the total length of the synthetic decking shall not exceed 0.50 inch (12.7 millimeters) at the maximum curvature point when measured against a flat vertical surface.

3.3 Installation requirements. The synthetic decking shall be capable of being cut or machined from its original length and width dimensions to any smaller dimension or shape and shall be capable of being drilled. The synthetic decking manufacturer shall be consulted regarding recommendations on the cutting tools, cutting speeds, safety procedures, and all other fabrication-related concerns that should be considered during the installation of the decking.

3.4 Maintenance. When subjected to the operational environment normally encountered in well deck operations, the synthetic decking shall be capable of being cleaned using a washdown procedure that includes brushing with a mild cleaning solution followed by a steam water rinse.

3.5 System repairability. Damaged synthetic decking shall be capable of being replaced without requiring the use of specialized training or specialized equipment.

4. REGULATORY REQUIREMENTS. The offeror/contractor is encouraged to use recovered materials to the maximum extent practicable, in accordance with paragraph 23.403 of the Federal Acquisition Regulation (FAR).

4.1 Toxic products and formulations. The synthetic decking shall have no adverse effect on the health of personnel when used for its intended purpose. Pertinent questions shall be referred by the contracting activity to the appropriate departmental medical service, which will act as an advisor to the contracting activity. Regardless of any other requirements, materials and parts containing asbestos, mercury, lead, cadmium, chlorofluorocarbons (CFCs), vinyl chlorides, antimony trioxide, red phosphorous, and halogenated compounds (materials that contain iodine, bromine, chlorine, and fluorine) shall not be used. The contractor shall have toxicological product formulations and associated information available for review by the contracting activity to evaluate the safety of the material for the proposed use.

5. QUALITY ASSURANCE PROVISIONS.

5.1 Contractor certification. The contractor shall certify and maintain substantiating evidence including recent test data that the product offered meets the salient characteristics of this CID and that the product conforms to the producer's own drawings, specifications, standards, and quality assurance practices. The government reserves the right to require proof of such conformance prior to delivery and thereafter as may be otherwise provided for under the provisions of the contract (see 7.2).

5.2 Quality assurance requirements. The quality assurance requirements specified herein are classified as follows:

a. First article testing (see 5.3)

b. Quality conformance inspection (see 5.4)

Downloaded from http://www.everyspec.com

5.3 First article testing. Unless otherwise waived (see 5.3.2 and 7.2), first article testing shall be performed in accordance with the standard tests identified in 3.1 on samples obtained from the first manufactured synthetic batterboard panel in a lot.

5.3.1 Lot definition. A lot shall consist of material from one production run offered for delivery. A new lot shall be declared when production methods, materials, or designs change.

5.3.2 Waiver of first article testing. At the Government's discretion, the Government may waive the requirement for first article testing to those bidders offering a product which has been previously acquired by the Government. Bidders offering such products, who wish to rely on such production or test data previously approved by the Government, must still furnish appropriate test data with the bid to show that prior Government approval is presently appropriate for the pending contract. However, the test data furnished as proof that the product is in compliance with this CID shall be from within the last 2 years. Test data shall clearly indicate that the material passed all of the test requirements with no exceptions (see 7.2).

5.4 Quality conformance inspection. All synthetic decking panels shall be visually examined in accordance with the requirements of section 3 to ensure that the panels show no evidence of waviness, delaminating, splintering, cracking, or peeling. This visual inspection shall be conducted on all panels at the time of Government receipt.

6. PACKAGING. Preservation, packing, and marking shall be as specified in the contract or order.

7. NOTES.

7.1 Source of Documents.

7.1.1 ASTM. ASTM standards are available from ASTM International, 100 Barr Harbor Dr., PO Box C700, West Conshohocken, PA 19428-2959 or online at www.astm.org.

7.1.2 Defense Specifications. Defense specifications are available online at http://assist.daps.dla mil/quicksearch/ or from the Standardization Document Order Desk, 700 Robbins Avenue, Building 4D, Philadelphia, PA 19111-5094.

7.1.3 FAR. The Federal Acquisition Regulation may be obtained from the Superintendent of Documents, U.S. Government Printing Office, Washington, DC 20402 or online at http://www.arnet.gov/far.

7.1.4 Naval Sea Systems Command (NAVSEA) Publications. Naval Sea Systems Command (NAVSEA) Publications may be obtained from the Naval Logistics Library, 5450 Carlisle Pike, Mechanicsburg, PA 17055 or online at http://nll.ahf nmci.navy.mil.

7.1.5 UL. UL standards are available from the Underwriters Laboratory Inc. are available from COMM 2000, 1414 Brook Drive, Downers Grove, IL 60515 or online at www.ul.com.

7.2 Ordering Data. The contract or order should specify the following:

a. Title, number, and date of this CID.
b. Type of panel: M-shaped, Waffle-shaped, or solid panel (see 2.1).
c. Panel length and width (inches) (found on installation drawings, see 2.1).
d. Color (see 3.1.1.10).
e. Thickness of synthetic decking panel (see 3.2).
f. Fastener mounting holes and hole patterns (see 3.2.5).
g. Certification of product conformance (see 5.1).

7.3 Key Words.

UHMWPE

Ultra high molecular weight polyethylene

Downloaded from http://www.everyspec.com

CIVIL AGENCY COORDINATING ACTIVITY:
GSA – FAS

Preparing Activity:
Navy – SH
(Project 2040-2008-001)

NOTE: The activities listed above were interested in this document as of the date of this document. Since organizations and responsibilities can change, you should verify the currency of the information above using the ASSIST Online database at http://assist.daps.dla.mil.