Downloaded from http://www.everyspec.com

INCH-POUND
A-A-59466A
11 January 2001
SUPERSEDING
A-A-59466
1 July 1999

COMMERCIAL ITEM DESCRIPTION

CLIPS, ELECTRICAL, GENERAL SPECIFICATION FOR

The General Services Administration has authorized the use of this commercial item description (CID) as a replacement for "Clips, Electrical, General Specification for" of W-C-440 for all federal agencies.

1. SCOPE. This CID covers the general requirements for electrical clips. Electrical clips covered by this CID are intended for commercial/industrial applications.

2. CLASSIFICATION. This CID uses a classification system which is included in the Part Identification Number (PIN) as shown in the following example (see 7.1).

AA59466	-	001
CID number		Dash number

2.1 Types. Electrical clips shall consist of the following types.

Type PC	-	Power clip
Type PCL	-	Power clip with lug
Type NC	-	Needle clip
Type TCM	-	Test clip, miniature
Type CC	-	Crocodile clip
Type TCI	-	Test clip, insulated
Type TC	-	Test clip
Type TCC	-	Test clip, clamping ears
Type BC	-	Battery clip

3. SALIENT CHARACTERISTICS.

3.1 Interface and physical dimensions. Electrical clips supplied to this CID shall be as specified herein (see figure 1 through figure 9, inclusive). When a definite material is not specified, material shall be used which will enable the electrical clips to meet the performance requirements of this specification. Acceptance or approval of any constituent material shall not be construed as a guaranty of the acceptance of the finished product.

3.1.1 Insulation.

3.1.1.1 Rubber. Rubber shall conform to class III, grade 50 of ZZ-R-765 and shall not contain reclaimed rubber.

Beneficial comments, recommendations, additions, deletions, clarifications, etc., and any data which may improve this document should be sent to: Defense Supply Center, Columbus, ATTN: DSCC-VAT, P.O. Box 3990, Columbus, OH 43216-5000, or telephone (614) 692-0542, or facsimile (FAX) (614) 692-6939.

DISTRIBUTION STATEMENT A. Approved for public release; distribution is unlimited.

Downloaded from http://www.everyspec.com

3.1.1.2 Polyvinyl chloride. Polyvinyl material shall be opaque nonrigid vinyl chloride-acetate having a durometer hardness not over 60 shore type "A" test and the dielectric strength shall be 250 volts per mil of thickness minimum. After aging in oil for 8 hours at 100°C ±1.1°C (212°F ±2°F), polyvinyl material shall not be tacky nor show signs of decomposition, and when flexed, shall not crack nor split.

3.1.2 Metals.

3.1.2.1 Brass. Brass shall conform to ASTM B134.

3.1.2.2 Phosphor bronze. Phosphor bronze shall conform to ASTM B159.

3.1.2.3 Copper. Copper material as specified herein shall be commercially pure copper, or copper alloyed with 3 percent to 5 percent zinc.

3.1.2.4 Copper-beryllium alloy. Copper-beryllium alloy shall conform to ASTM B194, ASTM B196, or ASTM B197.

3.1.2.5 Steel. Steel shall be of such materials, construction, and quality to ensure the clips meet the performance requirements of this specification. AMS-QQ-W-428 and ASTM A228 have been enabled electrical clips meet the requirements of this specification.

3.2 Design and construction. Electrical clips shall be of the design, construction, and physical dimensions specified (see 3.7).

3.2.1 Insulator sets. When specified (see 6.1 and Table I), clips shall be furnished with an insulator set molded of a polyvinyl or silicone rubber material having dimensions that will provide a suitable fit. When required, insulator sets shall be installed. Unless otherwise specified (see 6.1 and Table I), these insulator sets shall be furnished half red and half black for polarity identification purposes.

3.2.2 Threaded parts. All threaded parts shall be in accordance with FED-STD-H28 or equivalent ANSI or ASME requirement.

3.2.2.1 Engagement of threaded parts. Threaded parts shall engage by at least two full threads.

3.2.3 Attaching hardware. Unless otherwise specified, machine screws and rivets shall be fabricated from carbon steel which enable the electrical clips to meet the requirements of this specification except Bessemer compositions (55,000 lb_b/in^2 minimum ultimate strength). Brass screws shall be fabricated in accordance with ASTM B134.

3.2.4 Finish. Electrical clips shall be unplated, except that ferrous materials shall be suitably plated to resist corrosion.

3.2.5 Spring. The spring or clip shall be designed so that the spring will not become dislodged when clip is fully compressed.

3.2.6 Minimum metal thickness. Copper parts of electrical clips shall be of minimum thickness as specified in detail requirements for individual clip types.

3.2.7 Jaws. There shall be free jaw openings. In designs where jaws mesh, all teeth shall enter the mating trough. In designs where jaws pass, the front turn-over portions of the jaws shall not cause binding, and the maximum space between the end of the outer jaws turn-over portion and the inner jaw turn-over portion shall not exceed twice the thickness of the metal.

3.2.8 Shunt (where applicable). The shunt shall be placed in such a manner that one coil of the spring shall rest on each end of the shunt so that the shunt will not become dislodged.

3.2.9 Wire crimping ears. The wire crimping ears shall be of sufficient size that they will accommodate a wire capable of carrying the maximum current for which the clip is intended.

3.2.10 Hinge pins. Only solid rivets shall be used for hinge pins.

Downloaded from http://www.everyspec.com

3.3 Spring pressure. The minimum opening force required shall be as specified on the applicable figure.

3.4 Salt-spray (corrosion). When electrical clips with attaching hardware are subjected to salt spray, there shall be no exposure of the plated base metals or blistering of plated surfaces of the hardware.

3.5 Marking. Electrical clips shall be marked with the manufacturer's (MFGR) standard commercial PIN, and if space permits, the current rating (amps).

3.6 Workmanship.

3.6.1 Electrical clips. Electrical clips shall be free from burrs, sharp edges, flaws, fractures, or cracks in the metal. The clips shall be free of grease, oil, metal filings, chips, and other foreign material. They shall be uniform in quality and free from defects that will affect life, serviceability, or appearance.

3.6.2 Insulator sets. The interior shall be free from mold flash congestion. They shall be uniform in quality and free from defects that will affect life, serviceability, or appearance. Insulator sets shall not restrict free jaw opening of the clips.

3.7 Detail requirements for individual clip types. Detail requirements applicable to individual types of electrical clips shall be as specified on the applicable figure. In the event of any conflict between the general requirements of this specification and the detail requirements, the latter shall govern.

3.7.1 Type TCM electrical clip. Type TCM electrical clips shall be of the design, construction, and physical dimensions specified on figure 1 and shall be furnished with a conductor bridge or hole and insulation clamping ears.

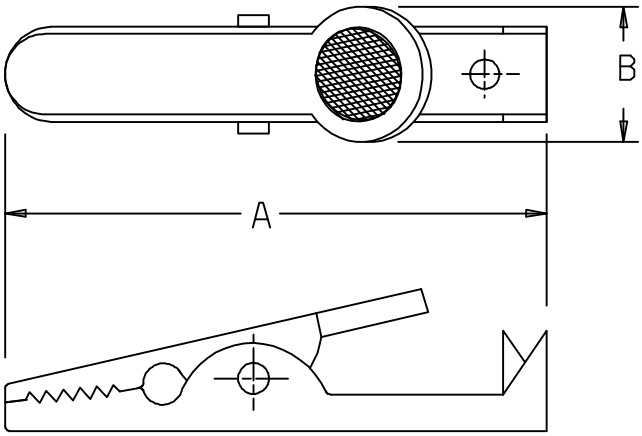

Item number	A (max)	B (max)	Jaw opening (min)	Spring pressure (lbs-min)	Nominal current rating (amp)	Material	Metal thickness (min)
1	1.12 (28.45)	.28 (7.11)	.19 (4.83)	2	5	Copper	.0140 (.36)

NOTES:
1. Dimensions are in inches.
2. Metric equivalents are given for general information only.
3. Millimeters are in parentheses.
4. Drawing depicts only general design characteristics and is not intended to limit specific manufacturing processes.
5. Teeth shall mesh.

FIGURE 1. Type TCM clip, electrical.

Downloaded from http://www.everyspec.com

3.7.2 Type TC electrical clip. Type TC electrical clips shall be of the design, construction, and physical dimensions specified on figure 2 and shall be furnished with a screw-type wire accommodation, conductor bridge, and a banana plug facility.

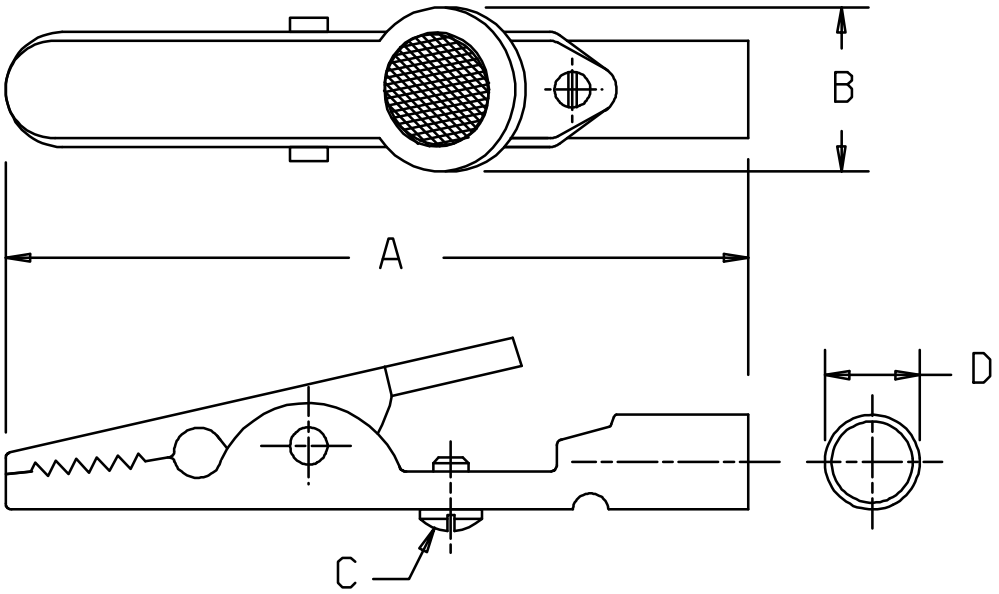

Item number	A (max)	B (max)	C Attaching hardware	D (min-max)	Jaw opening (min)	Spring pressure (lbs-min)	Nominal current rating (amp)	Material	Metal thickness (min)
1	2.00 (50.80)	.34 (8.64)	6-32 UNC or 6-40 UNF 2A x 5/32 LG.	.153-.163 (3.89-4.14)	.31 (7.87)	3 1/2	10	Copper	.0186 (.47)

NOTES:
1. Dimensions are in inches.
2. Metric equivalents are given for general information only.
3. Millimeters are in parentheses.
4. Drawing depicts only general design characteristics and is not intended to limit specific manufacturing processes.
5. Teeth shall mesh.

FIGURE 2. Type TC clip, electrical.

Downloaded from http://www.everyspec.com

3.7.3 TCI electrical clip. Type TCI electrical clips shall be of the design, construction, and physical dimensions specified on figure 3 and shall be furnished with a screw-type wire accommodation, conductor bridge, and a banana plug facility.

3.7.3.1 Insulated portions. Insulated portions shall be cellulose acetate or nylon.

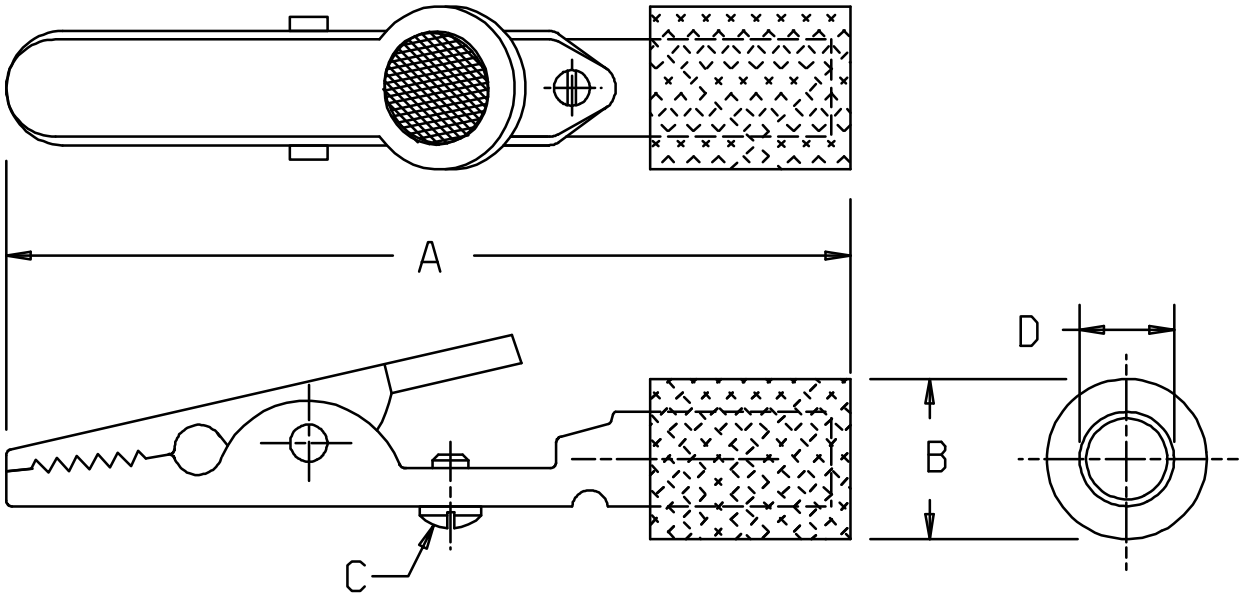

Item number	A (max)	B (max)	C Attaching hardware	D (min-max)	Jaw opening (min)	Spring pressure (lbs-min)	Nominal current rating (amp)	Insulator color	Material	Metal Thick-ness (min)
1	2.38 (60.45)	.41 (10.41)	6-32UNC OR 6-40UNF-2A X 5/32 LG.	.153-.163 (3.89-4.14)	.31 (7.87)	3 1/2	10	Red	Copper	.0186 (.47)
2								Black		

NOTES:
1. Dimensions are in inches.
2. Metric equivalents are given for general information only.
3. Millimeters are in parentheses.
4. Drawing depicts only general design characteristics and is not intended to limit specific manufacturing processes.
5. Shaded area indicates insulated portion.
6. Teeth shall mesh.

FIGURE 3. Type TCI clip, electrical.

Downloaded from http://www.everyspec.com

3.7.4 Type TCC electrical clip. Type TCC electrical clips shall be of the design, construction, and physical dimensions specified on figure 4 and shall be furnished with a screw-type wire accommodation, conductor bridge, and insulation clamping ears.

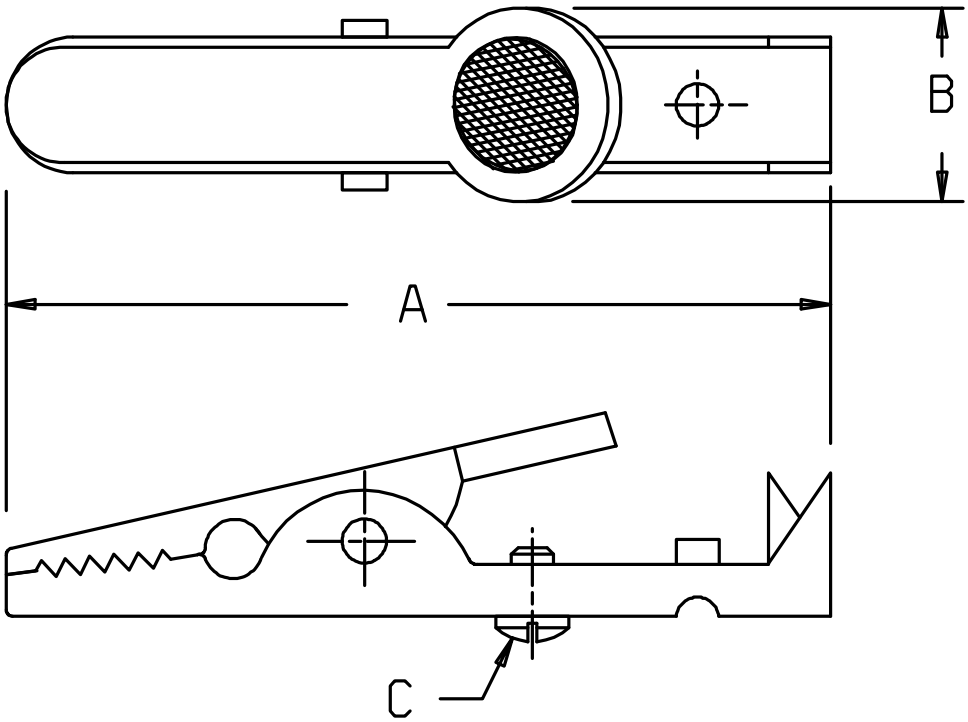

Item number	A (max)	B (max)	C Attaching hardware	Jaw opening (min)	Spring pressure (lbs-min)	Nominal current rating (amp)	Insulator color	Material	Metal thickness (min)
1	1.75 (44.45)	.34 (8.64)	6-32UNC OR 6-40UNF-2A X 5/32 LG.	.31 (7.87)	3	10	Red	Copper	.0186 (.47)
2							Black		

NOTES:
1. Dimensions are in inches.
2. Metric equivalents are given for general information only.
3. Millimeters are in parentheses.
4. Drawing depicts only general design characteristics and is not intended to limit specific manufacturing processes.

FIGURE 4. Type TCC clip, electrical.

Downloaded from http://www.everyspec.com

3.7.5 Type CC electrical clip. Type CC electrical clips shall be of the design, construction, and physical dimensions specified on figure 5 and shall be furnished with a screw-type wire accommodation and insulation clamping ears.

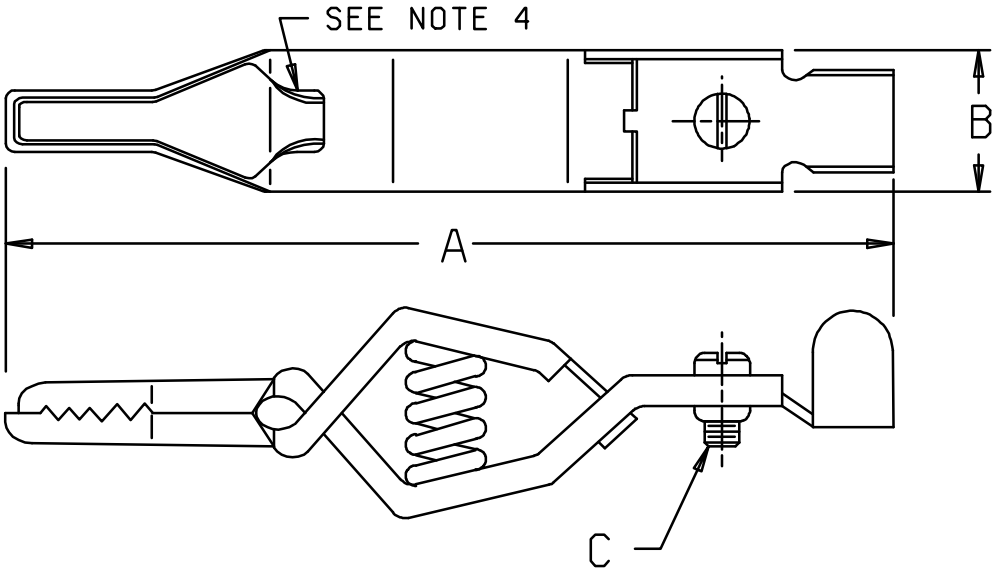

Item number	A (max)	B (max)	C Attaching hardware	Jaw opening (min)	Spring pressure (lbs-min)	Nominal current rating (amp)	Material	Metal thickness (min)
1	2.19 (55.63)	.38 (9.65)	6-32 UNC or 6-40 UNF-2AX 5/32 LG.	.31 (7.87)	4 1/2	10	Copper	.0260 (.66)

NOTES:
1. Dimensions are in inches.
2. Metric equivalents are given for general information only.
3. Millimeters are in parentheses.
4. Drawing depicts only general design characteristics and is not intended to limit specific manufacturing processes.
5. Item number 1 shall have a phosphor bronze spring and a brass screw.
6. Interlocking neck construction is required.

FIGURE 5. Type CC clip, electrical.

Downloaded from http://www.everyspec.com

3.7.6 Type PC electrical clip. Type PC electrical clips shall be of the design, construction, and physical dimensions specified on figure 6 and shall be furnished with a screw-type conductor accommodation for wire.

3.7.6.1 Hinge life (PC clips only). Hinge shall be constructed in such a manner that no damage will result nor will hinge become loosened or disassembled when opened and closed (100 operations).

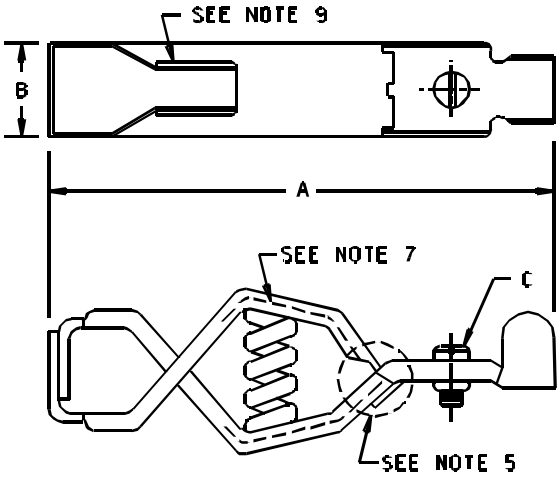

Item number	A (max)	B (max)	C Attaching hardware	Jaw opening (min)	Spring pressure (lbs) (min)	Nominal current rating (amp)	Material	Metal thickness (min)
1	1.62 (41.15)	.31 (7.87)	6-32 UNC or 6-40 UNF 2A x 5/32 LG.	.25 6.35)	4	10	Copper	.0238 (.60)
2	2.12 (53.85)	.38 (9.65)	6-32 UNC-2A x 3/16 LG.	.44 (11.18)	4	20	Copper	.0260 (.66)
3	2.44 (61.98)	.50 (12.70)	6-32 UNC-2A x 3/16 LG.	.62 (15.75)	7	40	Copper	.0310 (.79)
4	3.12 (79.25)	.69 (17.53)	8-32 UNC-2A x 1/4 LG.	.75 (19.05)	9	50	Copper	.0345 (.88)

NOTES:
1. Dimensions are in inches.
2. Metric equivalents are given for general information only.
3. Millimeters are in parentheses.
4. All items have crimp ears.
5. Design of pivot is optional.
6. Item number 1 shall have a phosphor bronze spring and a brass screw.
7. Item number 4 shall incorporate a solid copper shunt positioned to prevent overheating of the spring.
8. Drawing depicts only general design characteristics and is not intended to limit specific manufacturing processes.
9. Interlocking neck construction is required.
10. Insulator sets (see 3.2.1 and Table I).

FIGURE 6. Type PC clip, electrical.

Downloaded from http://www.everyspec.com

3.7.7 Type PCL electrical clip. Type PCL electrical clips shall be of the design, construction, and physical dimensions specified on figure 7 and shall be furnished with a screw-type conductor accommodation for wire or terminal lug (see table on figure 7).

3.7.7.1 Hinge pin. The upset end shall be concentric with the rivet diameter and shall have like appearance to the rivet head.

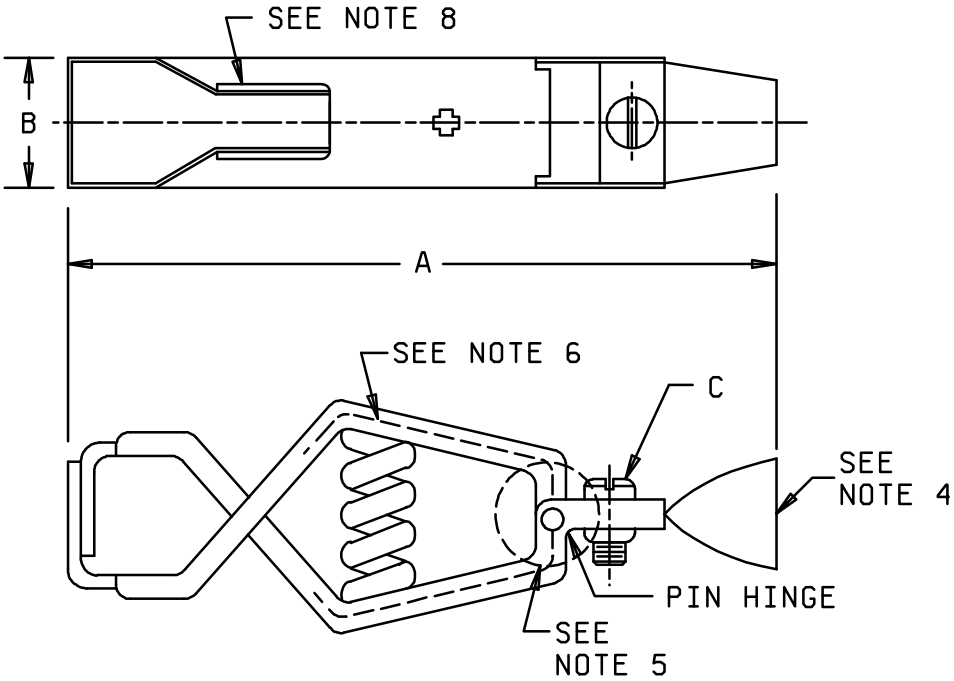

Item number	A (max)	B (max)	C Attaching hardware	Jaw opening (min)	Spring pres-sure (lbs) (min)	Nominal current rating (amp)	Material	Metal thick-ness (min)	Lugs		
									Inside dia-meter	AWG cable size (min)	Wall thick-ness (min)
1	4.75 (120.65)	.81 (20.57)	10-32 UNF-2A 5/16 LG.	1.06 (26.92)	18	100	Copper	.0478 (1.21)	.353 (8.97)	No. 4	.0420 (1.07)
2	6.25 (158.75)	1.12 (28.45)	1/4-20 UNC-2A 7/16 LG., washer lock, split for size 1/4 screw nut, hex 1/4-20 UNC-2B	1.62 (41.15)	24	200	Copper	.0610 (1.55)	.545 (13.84)	No. 1	.0420 (1.07)
3	8.00 (203.20)	1.44 (36.58)	5/16-18 UNC-2A x 1/2 LG., washer, lock split for size 5/16 screw nut, hex 5/16 18 UNC-2B	2.00 (50.80)	35	300	Copper	.0750 (1.91)	.668 (16.97)	No. 4/0	.0720 (1.83)

FIGURE 7. Type PCL clip, electrical.

Downloaded from http://www.everyspec.com

NOTES:
1. Dimensions are in inches.
2. Metric equivalents are given for general information only.
3. Millimeters are in parentheses.
4. Items have solder type, copper lugs.
5. A pin hinge is required.
6. All items shall incorporate a solid copper shunt positioned to prevent overheating of the spring.
7. Drawing depicts only general design characteristics and is not intended to limit specific manufacturing processes.
8. Interlocking neck construction is required.
9. Insulator sets (see 3.2.1 and Table I).

FIGURE 7. Type PCL clip, electrical - Continued.

3.7.8 Type NC electrical clip. Type NC electrical clips shall be of the design, construction, and physical dimensions specified on figure 8 and shall be furnished with a screw-type conductor accommodation and insulation clamping ears.

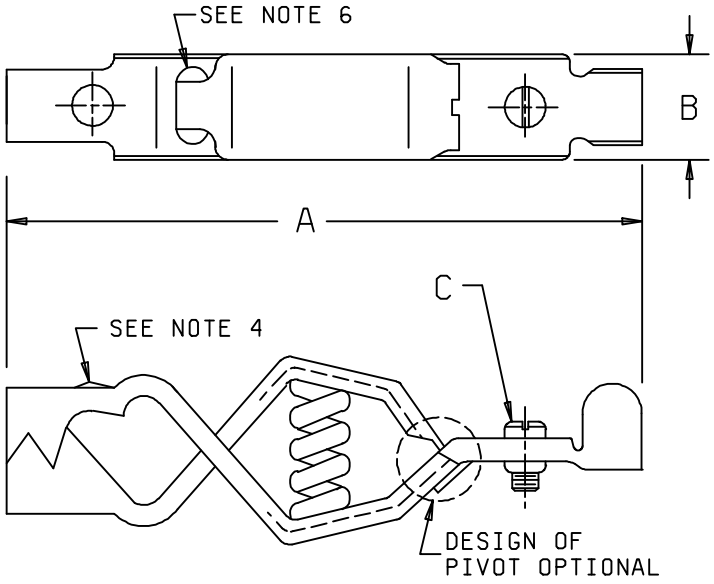

Item number	A (max)	B (max)	C Attaching hardware	Jaw opening (min)	Spring pressure (lbs-min)	Nominal current rating (amp)	Material	Metal thickness (min)
1	2.38 (60.45)	.38 (9.65)	6-32 UNC-2A X 3/16 LG.	.50 (12.70)	6	20	Copper	.0300 (.76)

NOTES:
1. Dimensions are in inches.
2. Metric equivalents are given for general information only.
3. Millimeters are in parentheses.
4. Drawing depicts only general design characteristics and is not intended to limit specific manufacturing processes.
5. Item number 1 shall have a phosphor bronze spring and a brass screw.
6. Interlocking neck construction is required.

FIGURE 8. Type NC clip, electrical.

Downloaded from http://www.everyspec.com

3.7.9 Type BC electrical clip. Type BC electrical clips shall be of the design, construction, and physical dimensions specified on figure 9 and shall be furnished with both screw-mounted, solder-type lug and an integral solder bridge conductor accommodation. Insulating clamping ears shall also be provided.

3.7.9.1 Insulated portions. Insulated portions shall be nonrigid polyvinyl-chloride.

3.7.9.2 Hinge pin. The upset end shall be concentric with the rivet diameter and shall have like appearance to the rivet head.

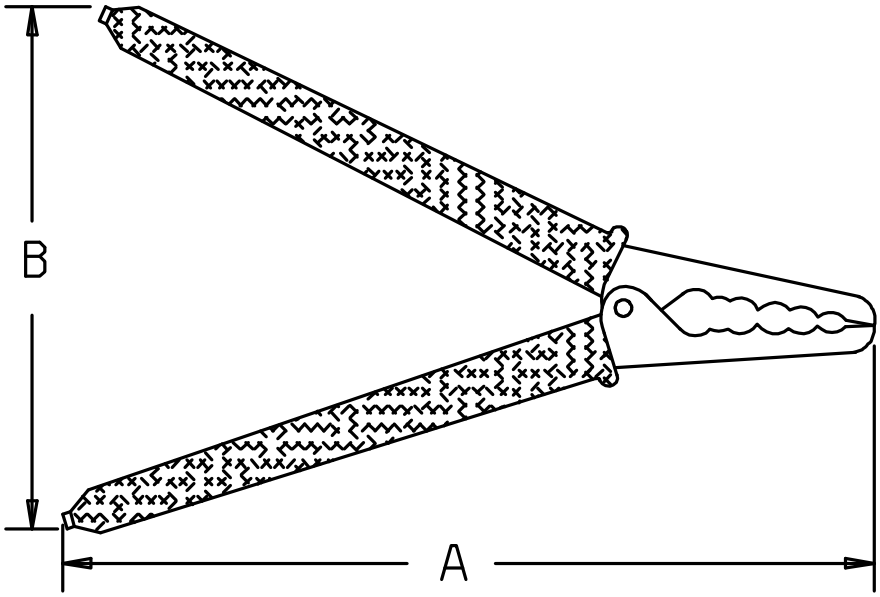

Item number	Jaw opening (min)	A (max)	B (max)	Spring pressure (lbs-min)	Nominal current rating (amp)	Insulator color	Material	Metal thickness (min)
1	1.50 (38.10)	4.81 (122.17)	6.50 (165.10)	10	200	Red	Copper	.0480 (1.22)
2						Black		

NOTES:
1. Dimensions are in inches.
2. Metric equivalents are given for general information only.
3. Millimeters are in parentheses.
4. Shaded areas indicates insulated portion.
5. Drawing depicts only general design characteristics and is not intended to limit specific manufacturing processes.

FIGURE 9. Type BC clip, electrical.

Downloaded from http://www.everyspec.com

TABLE I. Dash number identification.

Dash number AA59466-	Type clip	Item number	Figure number
001	TCM	1	1
002	TC	1	2
003	TCI	1	3
004	TCC	1	4
005	CC	1	5
006	PC	1	6
007 1/	PC	2	6
008 1/	PC	3	6
009 1/	PC	4	6
010 1/	PCL	1	7
011 1/	PCL	2	7
012 1/	PCL	3	7
013	NC	1	8
014	BC	1	9
015	BC	2	9
016	TCI	2	3
017	TCC	2	4

1/ If black insulators are required, add BLK to the part number (AA59466-XXXBLK). If red insulators are required, add RED to the part number (AA59466-XXXRED). If no insulators are required the part number is AA59466-XXX.

4. REGULATORY REQUIREMENTS.

4.1 Recycled/recovered materials. The offeror/contractor is encouraged to use recovered materials to the maximum extent practicable, in accordance with paragraph 23.403 of the Federal Acquisition Regulation (FAR).

5. QUALITY ASSURANCE PROVISIONS.

5.1 Product conformance. The products provided shall meet the salient characteristics of this CID, conform to the producer's own drawings, specifications, standards, and quality assurance practices, and be the same product offered for sale in the commercial market. The Government reserves the right to require proof of such conformance.

5.2 Market acceptance. The following market acceptance criteria are necessary to document the quality of the product to be provided under this CID:

a. The company producing the item must have been producing a product meeting the requirements of this CID for at least 2 years.

b. The company must have sold 200 units meeting this CID in the commercial marketplace over the past 2 years.

6. PACKAGING.

6.1 Preservation, packing, and marking. Preservation, packing, and marking shall be as specified in the contract or order.

6.2 Hardware. Unattached hardware, such as insulators, machine screws, and rivets shall be physically protected and enclosed within the unit package.

Downloaded from http://www.everyspec.com

7. NOTES.

7.1 PIN. The PIN should be used for Government purposes to buy commercial products to this CID. See section 2 for PIN format example.

7.2 Commercial and Government Entity (CAGE) code. For ordering purposes, inventory control, and submission of these electrical clips to DSCC under the Military Parts Control Advisory Group (MPCAG) evaluation program, CAGE code 58536 should be used.

7.3 Source of documents.

Federal Specifications

ZZ-R-765 - Rubber, Silicone (General Specification).

Federal Standard

FED-STD-H28 - Screw-Thread Standards for Federal Services.

(Copies of federal specifications and standards are available from the Defense Automated Printing Service, Building 4D (DPM-DODSSP), 700 Robbins Avenue, Philadelphia, PA 19111-5094.)

Other Publications

AMERICAN SOCIETY FOR TESTING AND MATERIALS (ASTM)

ASTM A228 - Standard Specification for Steel Wire, Music Spring Quality
ASTM B134 - Standard Specification for Brass Wire
ASTM B159 - Standard Specification for Phosphor Bronze Wire
ASTM B194 - Copper-Beryllium Alloy Plate, Sheet, Strip, and Roller Bar.
ASTM B196 - Rod and Bar, Copper-Beryllium Alloy.
ASTM B197 - Copper-Beryllium Alloy Wire.

(Application for copies should be addressed to the American Society for Testing and Materials (ASTM), 100 Barr Harbor Drive, West Conshohocken, PA 19428-2959.)

SOCIETY OF AUTOMOTIVE ENGINEERS

AMS-QQ-W-428 - Wire, Steel, Carbon, (High Carbon, Round, for Mechanical Springs, General Purpose).

(Application for copies should be addressed to the Society of Automotive Engineers, Inc. 400 Commonwealth Drive, Warrendale, PA 15096-0001.)

(Industry association specifications and standards are generally available for reference from libraries. They are also distributed among technical groups and using Federal agencies.)

Downloaded from http://www.everyspec.com

7.4 Ordering data. The contract or order should specify the following:

a. CID document number, revision, and CID PIN.

b. Product conformance provisions.

c. Packaging requirements.

d. Whether or not insulator sets are to be furnished with clips (see 3.2.1).

e. When applicable, the proportion of red and black for insulator sets, if other than half and half (see 3.2.1).

7.5 Commercial products. As part of the market analysis and research effort, this CID was coordinated with the following manufacturers of commercial products. At the time of CID preparation and coordination, these manufacturers were known to have commercial products that would meet the requirements of this CID. (NOTE: This information should not be considered as a list of approved manufacturers or be used to restrict procurement to only the manufacturers shown.)

MFGR's CAGE	MFGR's name and address
76545	Mueller Electric Company 1583 East 31st Street Cleveland, Ohio 44114-4332 (216)771-5225

7.6 Part number (P/N) supersession data. This CID supersedes the following MFGR's P/N's as shown. This information is being provided to assist in reducing proliferation in the Government inventory system.

TABLE II. P/N supersession data.

Dash number (see table I) AA59466-	MFGR's CAGE	MFGR's P/N 1/
001	76545	BU-30C
002	76545	BU-60CS
003	76545	BU-60CHS-2
004	76545	BU-70CS-2
005	76545	BU-85C
006	76545	BU-45C
007	76545	BU-48C
008	76545	BU-27C
009	76545	BU-25C
010	76545	BU-21CPN
011	76545	BU-11CPN
012	76545	BU-33C
013	76545	BU-50C
014	76545	BU-41CPN-VZZZ-2
015	76545	BU-41CPS-VZZZ-0
016	76545	BU-60CHS-0
017	76545	BU-70CS-0

1/ The manufacturer's P/N shall not be used for procurement to the requirements of this CID. At the time of preparation of this CID, the aforementioned commercial products were reviewed and could be replaced by the CID PIN shown.

Downloaded from http://www.everyspec.com

TABLE II. Supersession information.

Superseded (old) PIN in accordance with W-C-440	Superseding (new) CID PIN AA59466-
TCM1	001
TC1	002
TCI1	003
TCC1	004
CC1	005
PC1	006
PC2	007
PC3	008
PC4	009
PCL1	010
PCL2	011
PCL3	012
NC1	013
BC1	014
BC2	015
TCI2	016
TCC1	017

7.7 Government users. To acquire information on obtaining these electrical clips from the Government inventory system, contact Defense Supply Center, Columbus, ATTN: DSCC-CPBC, P.O. Box 3990, Columbus, OH 43216-5000, or telephone (614) 692-7892.

MILITARY INTERESTS:

Custodians:
Army - CR
Navy - SH
Air Force - 11
DLA - CC

Review activities:
Army – CR4, EA, MI
Air Force - 99

CIVIL AGENCY COORDINATING ACTIVITY:

GSA - 7FXE

Preparing Activity:
DLA - CC

Project 5999-0370