INCH-POUND
A-A-59326/5C
12 May 2014
SUPERSEDING
A-A-59326/5B
April 20, 2011

COMMERCIAL ITEM DESCRIPTION SPECIFICATION SHEET

COUPLING HALF, FEMALE BY INTERNAL PIPE THREAD, TYPE V

The General Services Administration has authorized the use of this commercial item description, for all federal agencies.

The complete requirements for procuring couplings described herein shall consist of this document and the latest issue in effect of A-A-59326.

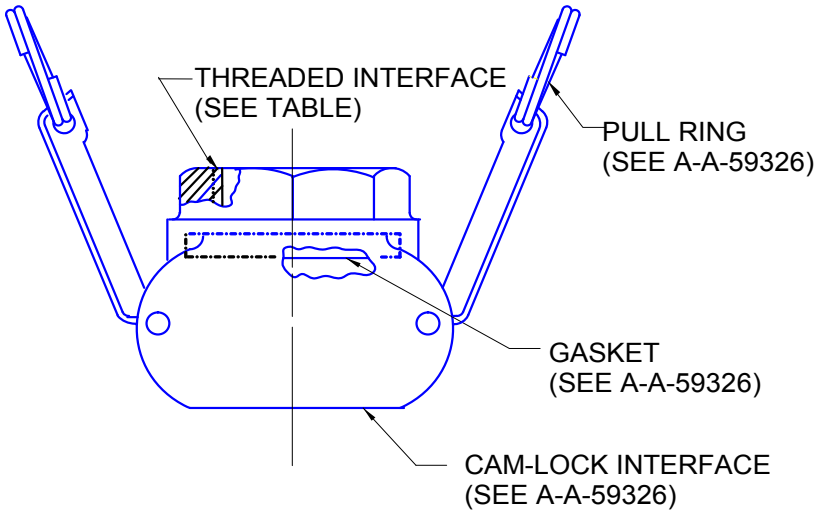

FIGURE 1. Coupling Half.

Comments, suggestions, or questions on this document should be addressed to Tank-automotive and Armaments Command, 6501 E. 11 Mile Road, Warren, MI 48397-5000 or emailed to usarmy.detroit.rdecom.mail.tardec-standardization@mail.mil. Since contact information can change, you may want to verify the currency of this address information using the ASSIST Online database at https://assist.dla.mil.

AMSC N/A FSC 4730

1. SCOPE: This specification covers a Female by Internal Pipe Thread, Type V Coupling Half.

2. CLASSIFICATION:

The size of the coupling halves is designated in Table 1.

TABLE 1. Coupling Half size.

Dash No	Cam-Lock Nom. Size	Thread FNPT	Gasket Reqd	Working Pressure (psi)	Hydrostatic Pressure (psi)
1	½	½-14	-1	150	300
2	¾	¾-14	-2	150	300
3	1	1-11 ½	-3	150	300
4	1 ¼	1 ¼-11 ½	-4	150	300
5	1 ½	1 ½-11 ½	-5	150	300
6	2	2-11 ½	-6	150	300
7	2 ½	2 ½-8	-7	150	300
8	3	3-8	-8	150	300
9	4	4-8	-9	150	300
10	6	6-8	-10	75	150
11	6	6-8	-10	150	225

Note: Sizes are in Inches

3. SALIENT CHARACTERISTICS. The following characteristics differ from those listed in A-A-59326A.

3.1. Accessories. The coupling shall be supplied with pull rings and gasket indicated.

3.2. Threads. The coupling threads shall conform to National Tapered Pipe Thread per ANSI/ASME B1.20.1.

3.3. Hydrostatic Test Pressure. See Table 1.

3.4. Working Pressure. See Table 1.

3.5. Number of Cam Arms. The dash number 1 (one) through 10 (ten) couplings shall have two cam arms. The dash 11 (eleven) coupling 6-inch, 150 psi working pressure shall have 4 (four) cam arms.

4. NOTES.

4.1. Part Identification Number (PIN). The following PIN procedure is for government purposes and does not constitute a requirement for the contractor. This example describes a part numbering system for specification sheet A-A-59326/5.

AA59326/5-6-A-1; where /5 indicates a Female by Internal Pipe Thread Type V Coupling Half; -6 indicates a 2 inch nominal size; A indicates Aluminum; and -1 indicates a style 1 coupling.

Material: A-Aluminum Alloy
B- Copper Alloy (Brass or Bronze)
BA- Aluminum Bronze
SS- Stainless Steel

Style 1 – Style 1 couplings do not require the incorporation of a positive locking mechanism to lock the cam arms in the closed position but the cam arms shall stay in the closed position when the coupling halves are assembled.

Style 2- Style 2 couplings shall incorporate a positive locking mechanism to lock the cam arms in the closed position when the coupling halves are assembled. The locking mechanism shall be manually released (the release doesn't have to stay in the released position) before the cam arms can be moved to the open position.

MILITARY INTERESTS:

Custodians:
Army - AT
Navy - YD
Air Force - 99

Review Activities:
Army - AV, GL
Navy - MC, SH
Air Force - 71
DLA - CC

CIVIL AGENCY COORDINATING ACTIVITY:
GSA - FAS

Preparing Activity:
Army - AT

(Project 4730-2014-041)

NOTE: The activities listed above were interested in this document as of the date of this document. Since organizations and responsibilities can change, you should verify the currency of the information above using the ASSIST Online database at https://assist.dla.mil.